Final Report

Technical Analysis of Lake Michigan Withdrawals

Summary of Findings

Prepared for:

U.S. Army Corps of Engineers – Chicago District
Chicago, Illinois

Prepared by:

MEAD & HUNT

September 2003

Table of Contents

Page

1. Introduction 1

2. Summary of Flow Measurement Techniques 2
   A. City of Chicago Pumping Stations 2
      (1) Flow Measurements 2
      (2) Flow Totalization 2
      (3) Calibration 3
   B. Summary of Results – North Shore Treatment Facilities 3
      (1) Central Lake County Joint Action Water Agency (CLCJAWA) 3
         (a) Flow Measurements 3
         (b) Flow Totalization 4
         (c) Calibration 4
      (2) Evanston 4
         (a) Flow Measurements 4
         (b) Flow Totalization 4
         (c) Calibration 5
      (3) Highland Park 5
         (a) Flow Measurements 5
         (b) Flow Totalization 5
         (c) Calibration 6
      (4) Northbrook 6
         (a) Flow Measurements 6
         (b) Flow Totalization 6
         (c) Calibration 7
      (5) Waukegan 7
         (a) Flow Measurements 7
         (b) Flow Totalization 7
         (c) Calibration 8
      (6) Wilmette 8
         (a) Flow Measurements 8
         (b) Flow Totalization 8
         (c) Calibration 8

3. Summary of Uncertainty Estimates 10
   A. City of Chicago Pumping Stations 10
   B. North Shore Treatment Facilities 12

4. Quality Assurance 20

5. Summary of Inadequacies in the Current Metering Systems 22
   A. City of Chicago Pumping Stations 22
   B. North Shore Treatment Facilities 22

6. Recommendations for Long-Term QA/QC and Improvements to Metering 25
   A. City of Chicago Pumping Stations 25
   B. North Shore Treatment Facilities 25

References 28

List of Tables

Table		Page
1	Uncertainty Components Addressed in the City of Chicago Pumping Station Reports	10
2	Summary of Uncertainty Measurements for the Twelve City of Chicago Pumping Stations	11
3	Uncertainty Components Addressed in the CLCJAWA Report	12
4	Uncertainty Components Addressed in the Evanston Report	13
5	Uncertainty Components Addressed in the Highland Park Report	14
6	Uncertainty Components Addressed in the Northbrook Report	15
7	Uncertainty Components Addressed in the Waukegan Report	16
8	Uncertainty Components Addressed in the Wilmette Report	17
9	Summary of Uncertainty Measurements for the Six North Shore Treatment Facilities	18
10	Summary of Each Station or Plant's Quality Assurance	21

Technical Analysis of Lake Michigan Withdrawals
Summary of Findings

1. Introduction

Currently, diversion of water from Lake Michigan for the state of Illinois is measured at the Chicago Sanitary and Ship Canal at Romeoville. The Great Lakes Mediation Memorandum of Understanding established a lakefront diversion accounting system and specified a 3-year transition period to assess the technical acceptability of moving the diversion measurement system to the lakefront. A lakefront diversion accounting system requires metering of all domestic water withdrawals from Lake Michigan and the direct diversions into the Chicago Sanitary and Ship Canal system at the Chicago River, the Calumet River, and the North Shore Channel at Wilmette. During the 3-year transition period, the U.S. Army Corps of Engineers (USACE) has been tasked to initiate a technical review of the accuracy of the reported domestic withdrawals from Lake Michigan.

The USACE retained Mead & Hunt, Inc. to evaluate the accuracy of domestic withdrawals from Lake Michigan. A total of 12 pumping stations in the city of Chicago (City) – Central Park, Cermak, Chicago Avenue, Lakeview, Lexington, Mayfair, Roseland, 68th Street, Southwest, Springfield Avenue, Thomas Jefferson, Western Avenue – and six suburban pumping stations – Central Lake County Joint Action Water Agency (CLCJAWA), city of Evanston, city of Highland Park, village of Northbrook, city of Waukegan, and village of Wilmette – will be evaluated. These facilities withdraw or pump an amount equal to or greater than 0.5 percent of the average total diverted domestic water supply of Lake Michigan. These evaluations include revisions to the investigations conducted on the City's Mayfair and Thomas Jefferson Stations and the city of Evanston's Station by the Illinois District of the U.S. Geological Survey. Separate investigations of each of the above-mentioned stations were conducted to determine the station's flow measurement techniques and to estimate the uncertainty of the station's daily and annual volume measurements. These findings were outlined in individual reports for each station.

This report summarizes the major findings of the study for each of the 18 pumping stations detailed in the individual reports, including:

- Flow measuring, totalization, and calibration techniques
- Summary of uncertainties in the hourly, daily, and annual volume measurements
- Metering and measuring quality assurance procedures
- Summary of inadequacies in the current metering systems
- Recommendations for long-term QA/QC and improvements to metering

2. Summary of Flow Measurement Techniques

A. City of Chicago Pumping Stations

The City's water treatment system consists of two water treatment plants – Jardine and South Water, and 12 inland pumping stations that are located at various points within the city limits. Since water withdrawals at the Jardine plant are not metered and this plant accounts for over 60 percent of the water withdrawals by the City, the metering data from the 12 inland pumping stations is used for LMO-3 reporting.

(1) Flow Measurements

All 12 of the City's Pumping Stations use venturi-type meters coupled with pressure transmitters to measure flow. At most stations, water from each pump is routed to a dedicated venturi meter and thus, rerouting flow from a particular pump to another venturi meter is not feasible. Stations that deviate from this setup include Lakeview, Lexington, and Mayfair.

(2) Flow Totalization

Flow data from all 12 of the City's Pumping Stations is sent to a Supervisory Control and Data Acquisition (SCADA) system, which automatically records and stores flows in two computer systems, one located at the Jardine water plant and the other located within the actual pumping station. Specifically, the signal from each pressure transmitter is sent to a computer (CP2), located at the plant where the pressure transmitter is located. The CP2 is where the flow data is displayed, processed, and temporarily stored. This computer is only capable of storing 3-days' worth of data. Therefore, the control center computer system (CP3) located at the Jardine water treatment plant reads the data from each pumping station's CP2 and is responsible for storing and maintaining the flow records. Note that if a station's CP2 were to fail, the data would not be communicated to CP3. The CP3 central control computer system consists of two computers with automatic failover such that if one computer fails, the other one takes over automatically. Both of these computers store data from the pumping station so none of the data should be lost in the event that either computer fails. The data stored on CP3 is also backed up on tape.

The SCADA system samples the output from the pressure transmitters every minute. The pressure transmitters' signal is divided by an integrator constant to convert it to a volume measurement. The sum of the 1,440, 1-minute readings is then used to determine the volume pumped through the system on a daily basis.

The Central Park, Mayfair, Springfield, Western, Roseland and Lexington Pumping Stations have backup data recorders that provide the stations with an additional level of protection should the SCADA system fail. If the chart recorders are used to report the flow data, however, this

information would have to be manually entered into the SCADA system after the problems with the SCADA system are corrected. In some instances, the stations that do not have back-up recorders do have venturi manometers that could be used to take flow readings.

(3) Calibration

An effective calibration procedure should calibrate both the primary flow meter and its secondary measurement device. First, the secondary measurement device, such as a pressure transmitter, should be calibrated to ensure it is reading correctly. Then, the flow meter itself should be calibrated to ensure it is functioning properly. The City does not perform any wet calibrations on the primary flow meters or their secondary measurement devices. Thus, all of the City's calibrations can be considered inferential in nature. The secondary measurement devices (i.e.; the pressure transmitters, totalizers, etc.) are dry-calibrated once a year. If the City notices a problem or discrepancy, the instruments are checked; repaired, if necessary; and calibrated. If these tasks cannot be completed immediately, the unit is taken out-of-service until it can be repaired and calibrated. When a pressure transmitter or totalizer is calibrated, a full dry-calibration is performed. This pressure gage provides a "calibrated" differential pressure that can be used to determine if the pressure transmitter or totalizer is reading properly. For the primary flow measurement devices, the City assumes the manufacturers' rating tables are correct.

After all the individual instruments have been dry-calibrated, the City performs an end-to-end calibration of the pumping station. When an end-to-end calibration is performed, the venturi-type meters are connected to manometers in order to obtain the pressure differentials. After an hour has passed, the volume measured by the manometer readings is compared to the volume measured by the totalizer. The City wants the difference between these two readings to be less than 2 percent for both the totalizer and instantaneous readings. This type of calibration is done to ensure that all the secondary measurement devices are working together properly.

B. Summary of Results – North Shore Treatment Facilities

The flow metering and recording systems at the six North Shore Treatment Facilities investigated in this study vary significantly. Therefore, they will be summarized individually.

(1) Central Lake County Joint Action Water Agency (CLCJAWA)

(a) Flow Measurements

At the CLCJAWA Facility, venturi-type meters with pressure transmitters are used to measure both the raw intake line and finished water line. The facility also has several additional venturi meters coupled with pressure transmitters, used for internal plant processing. The uncertainty analysis was conducted on the finished water meter.

(b) Flow Totalization

The output from the meter's transmitter is sent to a SCADA system. This system samples output from the pressure transmitter and totalizes the flow every 5 seconds. The hourly totals are recorded to determine the total volume pumped through the system on a daily basis. There are no chart recorders at the CLCJAWA Facility. The SCADA system has an uninterrupted power source and the CLCJAWA Facility is equipped with a power generator. Therefore, loss of data is not expected due to a power outage. Should the SCADA system fail, data would not be lost since the facility is manned 24-hours a day. If the operators notice a problem with the SCADA's data collection, they can collect the data manually, until the problems with the SCADA can be resolved.

(c) Calibration

The CLCJAWA does not perform any wet calibrations on the primary flow meters or their secondary measurement devices. For the primary flow measurement device, the CLCJAWA assumes the manufacturer's rating tables are correct. Calibration is performed on all the pressure transmitter's semi-annually. The pressure transmitter's calibration procedure consists of flushing the lines, applying a pressure, and measuring inches of water to the high side of the transmitter with a Fluke 700P04 pressure module and reading the corresponding mA DC output with the Fluke 702 calibrator for 5 points over the range.

(2) Evanston

(a) Flow Measurements

At the Evanston Facility, the raw water and two of the three finished water lines are measured using venturi-type meters and pressure transmitters. The other finished water line is measured using either a venturi-type meter with a pressure transmitter or a turbo meter depending on flow rate. The plant use water is measured using either a venturi-type meter coupled with a pressure transmitter or using volumetric techniques. The raw water meter's uncertainty was investigated in this analysis. The uncertainty of the plant use metering was also considered since the water pumped through the plant use metering reenters the system upstream of the raw meters, hence being measured twice by the raw water meters.

(b) Flow Totalization

The flow is totalized using two different methods. In the primary method, the 4 to 20 mA output signal from the pressure transmitter serves as input to a remote terminal unit (RTU). The software in the RTU then converts this raw signal into a flow measurement. The flow measurements are performed approximately every 6 seconds, which correlates to approximately 600 readings being used to obtain an hourly average. The total volume that passed through the meter in a given day would then be the sum of the 24-hourly average readings. This process is used for both the raw water and the plant use water. Once the daily raw water and plant use water volumes are determined, these values are subtracted to obtain the true daily raw-water volume.

In the secondary method, the pressure transmitter signal is sent into a discriminator, summator, and totalizer. The output of the totalizer is then used as the total flow that has passed through the meter. The primary method is more accurate than the secondary method, and the secondary method is just used as a check and as a backup in case there is a problem with the RTU or software.

(c) Calibration

The city of Evanston does not perform any wet calibrations on their equipment, and all of their calibrations can be considered inferential in nature. For the primary flow measurement device, the city of Evanston assumes the manufacturer's rating table is correct. When the secondary measurement devices are in operation, they are checked, zeroed, or dry-calibrated every month. When a pressure transmitter is checked, it is simply examined to see if it is functioning properly. When a pressure transmitter is zeroed, the pressure transmitter is checked to see if the zero has drifted. When a pressure transmitter is calibrated, a full dry calibration is performed using an Ametek Mod-Cal Series multi-meter/transmitter module. The Ametek module provides a "calibrated" differential pressure that can be used to determine if the pressure transmitter is reading properly.

(3) Highland Park

(a) Flow Measurements

The Highland Park Water Treatment Plant's (Highland Park Plant) metering system consists of a raw water venturi, internal plant metering (for the wash water, surface wash water, and plant use) and three finished water meters.

Lake Michigan water intakes to the Highland Park Plant are measured through the raw water venturi coupled with a pressure transmitter with adjustments made for internal plant usage, wash water, and surface wash water. The finished meters consist of a venturi with a pressure transmitter, an orifice plate with a pressure transmitter, and a turbine meter with a transmitter.

(b) Flow Totalization

The output signals from the transmitters are sent continuously to a SCADA system located at Highland Park's Plant. These output signals are first converted to an average minute flow value that is further averaged and stored every 10 minutes. The final hourly flow rates recorded by the plant operator are based on averaging and totaling these 10-minute averages over an hour's time. There are no backup recorders or totalizers at the Highland Park Plant.

(c) Calibration

In-house calibrations of pressure differentials for the venturi meter and orifice plate are performed by inducing a pressure with a hand pump and measuring the output from the transmitter using Transmation Instruments Calibrator. A 4-point calibration of these transmitters is conducted on a 6-month interval to ensure accuracy.

The manufacturer and geometry of the venturi meter and orifice plate are unknown. Therefore, the beta ratio and coefficient of discharge also is not known and the standard equations for flow through the venturi and orifice meters cannot be used to determine the relationship between the flow rate and differential pressure. Therefore, an outside consulting company tests the venturi meter and orifice plate approximately every 2 years to generate additional data points to refine the meter's calibration curves.

Since the city of Highland Park does not use the effluent meters for the LMO reporting, they have not calibrated the effluent Sparling turbine meter. In conversations with technical support at Sparling, failure to calibrate the meter regularly should not affect the uncertainty of this turbine meter. Calibration is not required unless the turbine has been damaged or worn parts. Checking for these occurrences is outlined in the Sparling turbine meter's instruction manual.

(4) Northbrook

(a) Flow Measurements

The village of Northbrook uses both venturi-type meters coupled with pressure transmitters and magnetic meters to measure flows in its water treatment facility. The intake from Lake Michigan that supplies the Northbrook Water Treatment Plant (Northbrook Plant) is split into two pipelines and includes two magnetic meters. Between the lake and plant, there are four small water users who have withdrawn water. In recent years, however, these users, three golf courses and the County's Botanical Gardens, have reduced or stopped their withdrawals. The influent water is metered at the plant with another magnetic meter that is located downstream of these four diversions. The raw water then flows through one or more of three venturi meters into the purification plant. Wash water is recycled and metered before it reenters the system between the plant's magnetic flow meter and three venturi meters. Finished water is distributed and metered through either a venturi or a magnetic flow meter. At the Northbrook Plant, the two finished water meters are used for LMO-3 reporting.

(b) Flow Totalization

The station currently has a Westinghouse control system. Flow totalization occurs differently for the two finished meters. The output from the venturi's pressure transmitter is sent to the Westinghouse QAX card which converts the analog signal to digital data. The magnetic flow meter generates a pulsed output, which the Westinghouse QAX card is not set up to receive.

Therefore, a signal converter microprocessor converts the signal to a proportional current for transmission to the Westinghouse system by a 4 to 20 mA DC current loop. The Westinghouse QAX card converts the analog signal to digital data. This digital data is used by the Westinghouse system to display flow values and calculate running flow totals throughout the course of the month.

The Westinghouse control system has an uninterrupted power source that is equipped with a power generator. Therefore, loss of data is not expected due to a power outage. Should the control system fail, data would not be lost since the facility is manned 24 hours a day. If the operators notice a problem with the Westinghouse control system's data collection, they can collect the data manually until the problems with the control system can be resolved. In addition, the magnetic flow meter has an internal flow totalizer. The flow records from this totalizer is recorded monthly on a separate data log sheet. Therefore, the magnetic meter has an additional level of backup for data collection.

(c) Calibration

For the venturi meters, the village of Northbrook assumes manufacturer's rating tables are correct. The village of Northbrook does not perform any wet calibrations on the venturi meters or their secondary measurement devices. Thus, all of the village of Northbrook's calibrations can be considered inferential in nature. Calibration is performed on both the effluent venturi and magnetic meters annually by an independent contractor, Technical Support Associates (TSA). A dry calibration is performed on the venturi meter's differential pressure transmitter. This procedure consists of flushing the lines, applying pressure to the high side of the transmitter with a pneumatic pressure calibrator, and reading the corresponding mA DC output for 5 points over the range.

For the magnetic flow meters, calibration is performed annually with a Krohne simulator. The Krohne calibration equipment is used to input a simulated signal. A digital multimeter is used to read the corresponding mA DC output at the particular range. This simulator checks the transmitter.

(5) Waukegan

(a) Flow Measurements

The city of Waukegan measures raw water intake from Lake Michigan with two venturi flow tubes, and finished water with three venturi flow tubes. The plant also has internal metering to measure the wash water flow. All of the venturi meters are connected to pressure transmitters.

(b) Flow Totalization

The output signals from the transmitter of each of the two raw water meters and the three finished water meters are sent to both a digital totalizer and a circular pump chart. The flow meters are read and recorded from the totalizers daily. The circular pump charts provide a continuous record or flows.

(c) Calibration

The city of Waukegan does not perform any wet calibrations on the primary flow meters or their secondary measurement devices. Thus, all of the city's calibrations can be considered inferential in nature. Calibration is performed on the pressure transmitters and chart recorders/totalizers at least annually. For the primary flow measurement device, the city of Waukegan assumes the manufacturer's rating tables are correct.

To calibrate the differential pressure transmitters, pressure is applied to the transmitters using a pressure regulator. The corresponding mA DC output is then measured with a multimeter for 5 points over the range. A Potentiometer is used as the current source for calibrating the chart recorder/totalizers for 5 points over the range. The corresponding output mA DC signal is read using a multimeter.

(6) Wilmette

(a) Flow Measurements

The Wilmette Water Plant (Wilmette Plant) has multiple metering locations. Lake Michigan water intakes to the Wilmette Plant are measured through two raw water ultrasonic meters. Six venturi meters with pressure transmitters are located within the inflow pipes. The finished water is metered through either a 24-inch Danfoss magnetic flow meter or a 36-inch venturi meter with a pressure transmitter. Two service water lines – the Carbon Tunnel and the South Gallery – are located downstream of the finished water meters and pumped back into the plant. Therefore, the water pumped through these service lines is actually metered twice by the finished water meters. To account for this, the two service water lines are also metered. Although the withdrawals for the LMO reporting are measured through the two raw water meters, the uncertainty analysis for this study was conducted on the finished water meters since this is consistent with the overall goals of the study.

(b) Flow Totalization

The Programmable Logic Controllers (PLCs), (Square – D Model 400's), continuously monitor the 4-20 mA signals from the two finished water meters and combine them and send them to the totalizer, which registers every 1,000 gallons. This is displayed on the SCADA computer screens as a totalizer that the operator records every 2 hours. In addition, the two finished water meters are connected to a Fischer-Porter totalizer. The service water lines are manually read from the

meters daily. The flow data from the service water lines is also sent to the SCADA system, which displays each meter's current flow reading.

(c) Calibration

A dry calibration is performed on the venturi meter's differential pressure transmitter annually. This procedure consists of flushing the lines, applying/measuring inches of water to the high side of the transmitter. The finished water venturi meter is calibrated using an Ametek/Mansfield and Green Pneumatic Dead Weight Tester (Model PK-6+54WC, Serial No. 78505) and reading the corresponding mA DC output for 5 points over the range. The actual venturi meter is not calibrated, rather the village of Wilmette assumes the manufacturer's rating tables are correct.

According to the village of Wilmette, the magnetic meter does not require calibration, although, on a regular basis, this meter is programmatically checked to ensure the proper values are entered. Conversations with technical support at Danfoss confirmed that regular calibration is not required since the meter has no moving parts. The service water meters are turbo meters that do not require calibration.

The station is manned 24 hours a day. If the operators notice a problem, the station has manual system computation capabilities until the problem is resolved.

3. Summary of Uncertainty Estimates

Hourly log readings for raw-water meters were obtained for each plant from the City, typically over three 2-week periods or three 1-week periods in 1997, 1998, or 1999. It was assumed that flows were constant over that hour, and that these time periods were representative of withdrawals for the entire year. Uncertainties were then calculated and reported as a standard deviation of measurement, or in relative terms by the standard deviation divided by the mean of measurements. Sample calculations illustrating the procedure are contained in *Technical Review of Lake Michigan Withdrawals, Evanston Water Treatment Plant* (Mead & Hunt, August 2003). Results of the analyses are summarized below.

A. City of Chicago Pumping Stations

The analyses for the City of Chicago's Pumping Stations included various sources of uncertainty. Some of the uncertainty components, although addressed in the reports, could not be quantified, and thus were not included in the calculations. Table 1 provides a summary of uncertainty components addressed in the reports and whether they were used in the quantitative analysis.

Table 1
Uncertainty Components Addressed in the City of Chicago Pumping Station Reports

Uncertainty Component	Included in Quantitative Analysis?
Venturi-type meters	Yes – Uncertainty values were obtained from manufacturer's specifications.
Pressure taps	No – It was assumed that since the pressure taps were constructed in a controlled environment, there was little opportunity for them to be constructed poorly. It was not feasible to inspect the pressure taps to confirm or deny this assumption.
Meter installation – Upstream piping	Yes – ISO 5167-1:1991 provided a quantitative error estimate for metering systems that did not have adequate upstream piping to prevent distortion of the flow profile entering the venturi-type meter.
Meter installation – Downstream piping	No – ISO 5167-1:1991 did provide information on whether the metering system had adequate downstream piping, but did not provide a quantitative value to assign to metering systems with inadequate downstream piping.
Sampling	No – A randomized complete block design was performed on the stations that had two data recorders (Central Park, Mayfair, Springfield, Western, and Roseland stations). The results were mixed with some stations having no statistical difference between the two data recording systems, while other plants did have a statistical difference. Despite the findings that sampling might affect the uncertainty of some of the metering systems, the effect could not be quantified and included in the analyses.
Pressure differential measurement	Yes – Uncertainty values were obtained from manufacturer's specifications.

Table 1
Uncertainty Components Addressed in the City of Chicago Pumping Station Reports

Uncertainty Component	Included in Quantitative Analysis?
Dry calibration of pressure transmitters	Yes – Uncertainty values were obtained from manufacturer's specifications.
SCADA system	Yes – Uncertainty values were obtained from manufacturer's specifications.

The uncertainty estimates for the 12 City of Chicago Pumping Stations are summarized in Table 2. With the exception of the Lakeview and Western Avenue stations, all of the City's Pumping Stations' metering systems are capable of measuring the annual volume to within ± 2.0 percent. The Western Avenue Station's annual volume measurement accuracy of - 0.50 ± 2.57 percent is higher than other stations, but still falls within an acceptable range. The Lakeview Station's annual volume measurement accuracy of - 0.50 ± 27.15 percent is significantly high. The main factor influencing the Lakeview Station's metering accuracy is that the meters at the Lakeview Station are oversized for the application.

Table 2
Summary of Uncertainty Measurements for the Twelve City of Chicago Pumping Stations

Station	Average Daily Flow over Study Period (MGD)	Uncertainty of Hourly Flow Measurements (percent)	Uncertainty of Daily Volume Measurements (percent)	Uncertainty of Annual Volume Measurements (percent)
Central Park	97.1	-0.31 ± 5.64	-0.30 ± 1.92	-0.30 ± 1.47
Cermak	39.2	-1.00 ± 3.61	-1.00 ± 1.04	-1.00 ± 0.47
Chicago Avenue	52.3	-0.72 ± 3.57	-0.72 ± 1.16	-0.72 ± 0.80
Lakeview	41.8	-0.50 ± 35.30	-0.50 ± 38.17	-0.50 ± 27.15
Lexington	83.8	-0.50 ± 7.70	-0.50 ± 1.68	-0.50 ± 0.63
Mayfair	143.6	-0.26 ± 4.21	-0.26 ± 2.01	-0.26 ± 1.74
Roseland	122.3	-0.32 ± 4.80	-0.32 ± 1.84	-0.32 ± 1.49
68th Street	61.0	-0.47 ± 3.61	-0.47 ± 1.12	-0.47 ± 0.76
Southwest	107.5	± 3.68	± 1.18	± 0.84
Springfield Avenue	97.2	-0.10 ± 5.55	-0.10 ± 1.88	-0.10 ± 1.51
Thomas Jefferson	55.5	-0.50 ± 3.33	-0.50 ± 0.95	-0.50 ± 0.55
Western Avenue	76.0	-0.50 ± 6.84	-0.50 ± 3.03	-0.50 ± 2.57

B. North Shore Treatment Facilities

The analyses for each of the six North Shore Treatment Facilities included various sources of uncertainty. Some of the uncertainty components, although discussed in the reports, could not be quantified and thus were not included in the calculations. Table Nos. 3 through 7 provide summaries of uncertainty components addressed in each North Shore Facilities report and whether these uncertainty components were used in the quantitative analyses.

Table 3
Uncertainty Components Addressed in the CLCJAWA Report

Uncertainty Component	Included in Quantitative Analysis?
Venturi-type meter	Yes – Uncertainty value was obtained from manufacturer's specifications.
Pressure taps	No – It was assumed that since the pressure taps were constructed in a controlled environment, there was little opportunity for them to be constructed poorly. It was not feasible to inspect the pressure taps to confirm or deny this assumption.
Meter installation – Upstream piping	Yes – ISO 5167-1:1991 provided a quantitative error estimate for metering systems that did not have adequate upstream piping to prevent distortion of the flow profile entering the venturi-type meter.
Meter installation – Downstream piping	No – ISO 5167-1:1991 did provide information on whether the metering system had adequate downstream piping, but did not provide a quantitative value to assign to metering systems with inadequate downstream piping.
Sampling	No – Assumed that sampling was not an issue since the sampling frequency is 17,280 measurements per day.
Pressure differential measurement	Yes – Uncertainty values were obtained from manufacturer's specifications.
Dry calibration of pressure transmitter	Yes – Uncertainty values were obtained from manufacturer's specifications.
SCADA system	Yes – Uncertainty values were obtained from manufacturer's specifications.

Table 4
Uncertainty Components Addressed in the Evanston Report

Uncertainty Component	Included in Quantitative Analysis?
Venturi-type meters – For raw water	Yes – Uncertainty values were obtained from manufacturer's specifications.
Venturi-type meters – For plant use water	Yes – Uncertainty values were estimated based on values obtained from a literature search.
Pressure taps	No – It was assumed that since the pressure taps were constructed in a controlled environment, there was little opportunity for them to be constructed poorly. It was not feasible to inspect the pressure taps to confirm or deny this assumption.
Rapids drawdown	Yes – Uncertainty values were estimated based on the physical measurements of the rapid drawdown tanks.
Raw water meters installation – Upstream piping	Yes – ISO 5167-1:1991 provided a quantitative error estimate for metering systems that did not have adequate upstream piping to prevent distortion of the flow profile entering the venturi-type meter.
Raw water meters installation – Downstream piping	No – ISO 5167-1:1991 did provide information on whether the metering system had adequate downstream piping, but did not provide a quantitative value to assign to metering systems with inadequate downstream piping.
Plant use meters installation – Upstream piping	No – No drawings were provided so this element was not included in the analysis.
Plant use meters installation – Downstream piping	No – No drawings were provided so this element was not included in the analysis.
Sampling	No – Assumed that sampling was not an issue since the sampling consists of 5,256,000 measurements per day.
Pressure differential measurement	Yes – Uncertainty values were obtained from manufacturer's specifications.
Dry calibration of pressure transmitters	Yes – Uncertainty values were obtained from manufacturer's specifications.

Table 5
Uncertainty Components Addressed in the Highland Park Report

Uncertainty Component	Included in Quantitative Analysis?
Venturi-type meter	Yes – Uncertainty values were estimated based on values obtained from a literature search.
Orifice meter	Yes – Uncertainty values were estimated based on values obtained from a literature search.
Turbine meter	Yes – Uncertainty values were obtained from manufacturer's specifications.
Pressure taps	No – It was assumed that since the pressure taps were constructed in a controlled environment, there was little opportunity for them to be constructed poorly. It was not feasible to inspect the pressure taps to confirm or deny this assumption.
Venturi and orifice meter installations – Upstream piping	Yes – ISO 5167-1:1991 provided a quantitative error estimate for metering systems that did not have adequate upstream piping to prevent distortion of the flow profile entering the venturi-type meter.
Venturi and orifice meter installations – Downstream piping	No – ISO 5167-1:1991 did provide information on whether the metering system had adequate downstream piping, but did not provide a quantitative value to assign to metering systems with inadequate downstream piping.
Turbine meter – Upstream piping	No – Manufacturer did provide information on whether the metering system had adequate upstream piping, but did not provide a quantitative value to assign to metering systems with inadequate upstream piping. The piping was adequate so the lack of a quantitative value was not an issue.
Turbine meter – Downstream piping	No – Manufacturer did provide information on whether the metering system had adequate downstream piping, but did not provide a quantitative value to assign to metering systems with inadequate downstream piping. The piping was adequate so the lack of a quantitative value was not an issue.
Sampling	No – Sampling was not an issue since data is continuously sent to the SCADA.
Pressure differential measurement	Yes – Uncertainty values were obtained from manufacturer's specifications.
Turbine meter's transmitter	Yes – Uncertainty values were obtained from manufacturer's specifications.
Dry calibration of pressure transmitters	Yes – Uncertainty values were obtained from manufacturer's representative.
Calibration of turbine meter	N/A – According to manufacturer, calibration is not required.
SCADA system	Yes – Uncertainty values were obtained from manufacturer's specifications.

Table 6
Uncertainty Components Addressed in the Northbrook Report

Uncertainty Component	Included in Quantitative Analysis?
Venturi-type meters	Yes – Uncertainty values were obtained from manufacturer's representative.
Magnetic flow meter	Yes – Uncertainty values were obtained from manufacturer's specifications.
Pressure taps	No – It was assumed that since the pressure taps were constructed in a controlled environment, there was little opportunity for them to be constructed poorly. It was not feasible to inspect the pressure taps to confirm or deny this assumption.
Venturi meter installation – Upstream piping	Yes – ISO 5167-1:1991 provided a quantitative error estimate for metering systems that did not have adequate upstream piping to prevent distortion of the flow profile entering the venturi-type meter.
Venturi meter installation – Downstream piping	No – ISO 5167-1:1991 did provide information on whether the metering system had adequate downstream piping, but did not provide a quantitative value to assign to metering systems with inadequate downstream piping.
Magnetic flow meter installation – Upstream piping	No – Manufacturer did provide information on whether the metering system had adequate upstream piping, but did not provide a quantitative value to assign to metering systems with inadequate upstream piping. The piping was adequate so the lack of a quantitative value was not an issue.
Magnetic flow meter installation – Downstream piping	No – Manufacturer did provide information on whether the metering system had adequate downstream piping, but did not provide a quantitative value to assign to metering systems with inadequate downstream piping. The piping was adequate so the lack of a quantitative value was not an issue.
Sampling	No – Assumed that sampling was not an issue since the sampling consists of 28,000 to 43,200 measurements per day.
Pressure differential measurement	Yes – Uncertainty values were obtained from manufacturer's specifications.
Dry calibration of pressure transmitters	Yes – Uncertainty values were obtained from manufacturer's specifications.
Dry calibration of magnetic meter electronics	Yes – Uncertainty values were obtained from manufacturer's representative and specifications.
SCADA system	Yes – Uncertainty values were obtained from manufacturer's specifications.

Table 7
Uncertainty Components Addressed in the Waukegan Report

Uncertainty Component	Included in Quantitative Analysis?
Venturi-type meters	Yes – Uncertainty values were estimated based on values obtained from a literature search.
Pressure taps	No – It was assumed that since the pressure taps were constructed in a controlled environment, there was little opportunity for them to be constructed poorly. It was not feasible to inspect the pressure taps to confirm or deny this assumption.
Meter installation – Upstream piping	No – No drawings of the meter installations were available, so this element was not included in the analysis.
Meter installation – Downstream piping	No – No drawings of the meter installations were available, so this element was not included in the analysis.
Sampling	N/A – Chart recorders are used at this facility. Chart recorders continuously receive the pressure transmitter's output signal; therefore, sampling is not an issue.
Pressure differential measurement	Yes – Uncertainty values were obtained from manufacturer's specifications.
Dry calibration of pressure transmitters	Yes – Uncertainty values were obtained from the manufacturer's representative and specifications.
Chart recorder	Yes – Uncertainty values were obtained from manufacturer's specifications.
Dry calibration of the chart recorder	Yes – Uncertainty values were obtained from manufacturer's specifications.

It must be noted that the lack of data in regard to the flow meters and their installation significantly limits the quality of the analysis performed for the Waukegan Pumping Station.

Table 8
Uncertainty Components Addressed in the Wilmette Report

Uncertainty Component	Included in Quantitative Analysis?
Venturi-type meter	Yes – Uncertainty values were estimated based on values obtained from a literature search.
Magnetic flow meter	Yes – Uncertainty values were obtained from manufacturer's specifications.
Turbo flow meter	Yes – Uncertainty values were obtained from manufacturer's specifications.
Pressure taps	No – It was assumed that since the pressure taps were constructed in a controlled environment, there was little opportunity for them to be constructed poorly. It was not feasible to inspect the pressure taps to confirm or deny this assumption.
Venturi meter installation – Upstream piping	Yes – ISO 5167-1:1991 provided a quantitative error estimate for metering systems that did not have adequate upstream piping to prevent distortion of the flow profile entering the venturi-type meter.
Venturi meter installation – Downstream piping	No – ISO 5167-1:1991 did provide information on whether the metering system had adequate downstream piping, but did not provide a quantitative value to assign to metering systems with inadequate downstream piping. The piping was adequate so the lack of a quantitative value was not an issue.
Magnetic flow meter installation – Upstream piping	No – Manufacturer did provide information on whether the metering system had adequate upstream piping, but did not provide a quantitative value to assign to metering systems with inadequate upstream piping. The piping was adequate, so the lack of a quantitative value was not an issue.
Magnetic flow meter installation – Downstream piping	No – Manufacturer did provide information on whether the metering system had adequate downstream piping, but did not provide a quantitative value to assign to metering systems with inadequate downstream piping. The piping was adequate, so the lack of a quantitative value was not an issue.
Turbo flow meter installation – Upstream piping	No – Manufacturer did provide information on whether the metering system had adequate upstream piping, but did not provide a quantitative value to assign to metering systems with inadequate upstream piping. The piping was adequate, so the lack of a quantitative value was not an issue.
Turbo flow meter installation – Downstream piping	No – Manufacturer did provide information on whether the metering system had adequate downstream piping, but did not provide a quantitative value to assign to metering systems with inadequate downstream piping. The piping was adequate, so the lack of a quantitative value was not an issue.
Sampling	No – Assumed that sampling was not an issue since the sampling consists of over 10,000 measurements per day.
Pressure differential measurement	Yes – Uncertainty values were obtained from the manufacturer's specifications.
Pulse to analog convertor of the turbo flow meter	Yes – Uncertainty values were obtained from the manufacturer's representative.

Table 8
Uncertainty Components Addressed in the Wilmette Report

Uncertainty Component	Included in Quantitative Analysis?
Dry calibration of pressure transmitter	Yes – Uncertainty values were obtained from the manufacturer's representative and specifications.
Calibration of the magnetic flow meter	N/A – According to manufacturer, calibration is not required.
Calibration of the turbo flow meter	N/A – According to manufacturer, calibration is not required.
SCADA system	Yes – Uncertainty values were obtained from the manufacturer's representative.

The uncertainty estimates for the six North Shore Treatment Facilities are summarized in Table 9.

Table 9
Summary of Uncertainty Measurements for the Six North Shore Treatment Facilities

Station	Average Daily Flow over Study Period (MGD)	Uncertainty of Hourly Flow Measurements (percent)	Uncertainty of Daily Volume Measurements (percent)	Uncertainty of Annual Volume Measurements (percent)
CLCJAWA	19.7	-0.50 ± 4.66	-0.50 ± 0.99	-0.50 ± 0.04
Evanston	45.2	± 3.67	± 0.90	± 0.41
Highland Park	11.2	+0.21 ± 36.22	+0.21 ± 34.08	+0.21 ± 32.09
Northbrook	6.4	± 24.44	± 5.76	± 1.74
Waukegan	8.9	± 8.37	± 3.19	± 2.55
Wilmette	13.4	± 1.74*	± 0.89	± 0.04

** For the Wilmette Plant, the analysis was conducted on 2-hour flow values instead of hourly flow values.*

With the exception of the Highland Park Plant, all North Shore Stations have metering systems capable of measuring the annual volume to within ± 2.55 percent or less. For the Highland Park Facility, the annual volume measurement accuracy of -0.50 ± 32.09 is significantly high. The main factors influencing the Highland Park Facility's high level of uncertainty are the equipment used to calibrate the venturi meter and orifice plate (specifically the accuracy of the diagram isolated module), and the stability of the pressure Bristol Babcock pressure transmitter.

With regards to each of the North Shore's hourly reading uncertainty, CLCJAWA, Evanston, and Wilmette have reasonable error values of less than ± 5.0 percent. Waukegan's hourly flow uncertainty is slightly higher at ± 8.37 percent; whereas, Highland Park's and Northbrook's hourly flow uncertainties are significantly higher at + 0.21 ± 36.22 percent and ± 24.44 percent, respectively. As previously mentioned, Highland Park's metering accuracy is significantly influenced by venturi meter and orifice plate calibration equipment. Northbrook's hourly flow uncertainty is primarily influenced by low flows passing through an oversized venturi meter which, for the most part, is statistically canceled out when determining the annual volume uncertainty.

The Waukegan plant did not have drawings available of the meter installations, nor pertinent manufacturer information for two of the venturi meters in use. The third venturi meter has a flow rating curve, but the uncertainty of the curve is unknown. Therefore, the uncertainties computed for the Waukegan Plant are not considered particularly accurate, but are instead intended to provide at least a relative measure of the plant's metering accuracy. Additional information related to meter installation needs to be collected and the flow rating curves further analyzed before reasonable conclusions can be drawn.

4. Quality Assurance

The level of quality assurance falls into three distinct categories for the City of Chicago Pumping Stations as is summarized below.

- The Central Park, Mayfair, Roseland, Springfield, and Western Pumping Stations have both the abilities to reroute flow through different pump/meter combinations should one particular pump/meter system fail and backup chart recorders should the SCADA system fail. The presence of the backup recorders provides an additional level of quality assurance in that the data from the chart recorders can be compared to the data from the SCADA system as a means of performing an independent check on the functioning of the metering.

- The Cermak, Chicago Avenue, 68th Street, Southwest, and Thomas Jefferson Pumping Stations also have the ability to reroute flows through different pump/meter combinations should a particular pump/meter setup fail. These plants, however, do not have backup data recording systems should the SCADA system fail. With the exception of four of the Southwest Pumping Station's meters, all the meters at these stations have manometers that could be used to obtain readings. However, since these stations are remotely operated, obtaining readings on a regular basis if the SCADA failed could be difficult. Further, since there are no backup data recorders at these stations, an independent check of the metering's functioning is not feasible.

- Unlike the other ten City Pumping Stations, the Lakeview and Lexington Pumping Stations do not have the capabilities to reroute flows from a malfunctioning meter to an operating one. This deficiency would likely cause data to be lost if a meter-transmitter combination were to fail. The Lakeview Station has a further deficiency over the Lexington Station in that it does not have a backup data recording system should the SCADA fail. This could result in a loss of data at the Lakeview Station if the SCADA fails and does not allow for an independent check of the metering's functioning.

All six of the North Shore Facilities meter both their raw water and finished water lines. This enables the facilities to have a backup means of obtaining data if either a problem with the raw or finished water metering occurs. This also enables all the North Shore Stations to conduct an independent check of the metering's functioning by comparing the raw water readings to the finished water readings (with accounting for plant use and losses as needed).

In regards to backup to the data recording systems, the CLCJAWA and Northbrook facilities do not have self-operating backup totalizers; however, since both of these facilities are manned 24-hours a day, data could be recorded manually. Both the Evanston and Wilmette facilities have secondary recording systems as a backup measure. The Waukegan plant does not have any backup recorders. However, since the data is recorded on individual totalizers rather than a central SCADA system at the Waukegan

facility, data could be obtained from the raw water metering if there was a problem with the finished water metering. The Highland Park facility does not have backup recorders and this deficiency could result in a potential loss of data if a malfunction in the data collection system occurs.

Table 10 provides a summary of each of the City's Pumping Station's and the North Shore Facilities' quality assurance.

Table 10
Summary of Each Station or Plant's Quality Assurance

Station or Plant	Is there backup for the meter and transmitter?	Is there a self-operating backup for the data recorder?	Is an independent check possible?
Central Park	Yes	Yes	Yes
Cermak	Yes	No*	No
Chicago Avenue	Yes	No*	No
Lakeview	No	No	No
Lexington	No	Yes	Yes
Mayfair	Yes	Yes	Yes
Roseland	Yes	Yes	Yes
68th Street	Yes	No*	No
Southwest	Yes	No**	No
Springfield Avenue	Yes	Yes	Yes
Thomas Jefferson	Yes	No*	No
Western Avenue	Yes	Yes	Yes
CLCJAWA	Yes	No*	No
Evanston	Yes	Yes	Yes
Highland Park	Yes	No	Yes
Northbrook	Yes	No*	Yes
Waukegan	Yes	Yes	Yes
Wilmette	Yes	Yes	Yes

* *No automatic backup recorder exists. However, readings could be taken manually.*

** *No automatic backup recorder exists. However, readings could be taken manually for two of the six meters.*

5. Summary of Inadequacies in the Current Metering Systems

A. City of Chicago Pumping Stations

A summary of the inadequacies of the City of Chicago's current metering system is as follows:

- For all of the pumping stations, the actual venturi meters are not calibrated. Rather, the City assumes that the manufacturer's rating curves are correct. Calibration of the venturis would confirm or deny this assumption.

- General to all the analyses, the overall accuracy in estimating the water supply pumpage is dependent upon many measurement and analysis functions. The documented technical reviews and much previous work were focused on the accuracy of the pumpage measurements in hardware (i.e., meters, calibrator, pressure transmitter, etc.) and software (SCADA, etc.). These analyses do not take into account procedural errors such as inconsistent data in water supply pumpage as a result of the reporting mechanism.

- For the Cermak, Chicago Avenue, Lakeview, 68th Street, Southwest, and Thomas Jefferson Pumping Stations, no backup data recorders exist. Therefore, should the SCADA system fail, all flow data at these stations is lost. Further, without two data sources, any additional uncertainty due to the sampling accuracy cannot be determined.

- Unlike the other ten City Pumping Stations, the Lakeview and Lexington Pumping Stations do not have the capabilities to reroute flows from a malfunctioning meter to an operating one. This inadequacy could lead to data loss.

- At the Lakeview Pumping Station, the east and west venturi meters are oversized for the flows passing through the meters. This leads to significantly high uncertainty values. In addition, since the meters are oversized for the application, the actual uncertainties of the venturi meters may be higher than the values reported in the Lakeview analysis.

B. North Shore Treatment Facilities

Applicable to all of the North Shore Treatment Facilities, the overall accuracy in estimating the water supply pumpage is dependent upon many measurement and analysis functions. The documented technical reviews and much previous work were focused on the accuracy of the pumpage measurements in hardware (i.e., meters, calibrator, pressure transmitter, etc.) and software (SCADA, etc.). These analyses do not take into account procedural errors such as inconsistent data in water supply pumpage as a result of the reporting mechanism. Inadequacies specific to each North Shore Facility are summarized below.

CLCJAWA Facility

- The actual venturi meter is not calibrated. Rather the CLCJAWA assumes the manufacturer's rating curve is correct. Calibration of the venturi would confirm or deny this assumption.

Evanston Facility

- The actual venturi meters are not calibrated. Rather, the city of Evanston assumes that the manufacturer's rating curves are correct. Calibration of the venturis would confirm or deny this assumption.

- No backup pressure transmitter exists for either the raw water or plant use meters. Should the pressure transmitter fail, all flow data associated with that transmitter could be lost.

Highland Park Facility

- No backup data recorders exists. Should the SCADA system fail, all flow data at the Highland Park Plant is lost.

- The accuracy of the diagram isolated module is 0.05 percent of full scale. In this application, full scale is 830.0 inches of water. The pressure produced through the finished water venturi and orifice plate is considerably lower than 830.0 inches of water causing a high level of uncertainty. The stability of the pressure transmitters have a similar effect, although to a slightly lesser extent, as the diagram isolated module and therefore also contributes to a high level of uncertainty.

- No manufacturer information for the venturi meter or the orifice meter was available.

- These regression curves developed for the venturi meter and the orifice meter have an uncertainty associated with them. However, this uncertainty was not quantified to be included in this analysis.

Northbrook Facility

- No backup data recorders exist for the finished water venturi meter. Should the SCADA system fail, the venturi meter's flow data at the facility could be lost.

- When low flows are passed through the venturi meter, high uncertainties are produced. This particularly affects the accuracy of the hourly flow values.

Waukegan Facility

- No manufacturer information is available for finished water meter Nos. 1 and 2. Further, no flow versus differential pressure curves have been established for these meters.

- No drawings of the meter installation were available to determine possible uncertainty due to meter installation.

- The uncertainty of the flow versus differential pressure curve for meter No. 3 is not known.

Wilmette Facility

- The actual finished water venturi meter is not calibrated. Rather, the village of Wilmette assumes that the manufacturer's rating curves are correct. Calibration of the venturis would confirm or deny this assumption.

6. Recommendations for Long-Term QA/QC and Improvements to Metering

A. City of Chicago Pumping Stations

Recommendations for long-term QA/QC and improvements to the metering are as follows:

- At all pumping stations, calibration of the venturi meters to determine if the manufacturer's rating curves are valid.

- At all pumping stations, occasional inspection and measurement, if physically possible, of the inlet and throat of the venturi meters to determine any possible presence and effects of corrosion and tuberculation on the meter's accuracy.

- Installation of a backup recording device at the Cermak, Chicago Avenue, Lakeview, 68th Street, Southwest, and Thomas Jefferson Pumping Stations.

- Routine auditing of various water withdrawal reports, as part of the long-term QA/QC, as a means of accounting for procedural errors.

- The Lakeview Station's east and west venturi meters should be replaced with meters that are designed to measure the station's typical flow range. If this is not feasible, more accurate methods of measuring the low differential pressures should be evaluated and installed. A calibrator with a full-scale value closer to the actual differential pressure produced by the meter should also be used to improve accuracy.

B. North Shore Treatment Facilities

In general, all of the North Shore Facilities should have routine auditing of various water withdrawal reports, as part of the long-term QA/QC, as a means of accounting for procedural errors. Recommendations specific to each North Shore Facility are summarized below.

CLCJAWA Facility

- Calibration of venturi meters to determine if the manufacturer's rating curves are valid.

Evanston Facility

- Calibration of the venturi meters to determine if the manufacturer's rating curves are valid.

- Occasional inspection and measurement, if physically possible, of the inlet and throat of the venturi meters to determine any possible presence and effects of corrosion and tuberculation on the meter's accuracy.

- Installation of a manometer on the venturi tubes is recommended to provide a backup differential pressure reading that can be converted to a flow reading should the pressure transmitter fail. Otherwise, store a backup pressure transmitter at the plant, such that the malfunctioning pressure transmitter can be replaced in a short amount of time with the spare until the malfunctioning transmitter can be repaired or permanently replaced.

Highland Park Facility

- Occasional inspection and measurement, if physically possible, of the inlet and throat of the venturi meters to determine any possible presence and effects of corrosion and tuberculation on the meter's accuracy.

- Installation of a backup recording device.

- Replace current calibration equipment with equipment that is better suited for the pressure differentials created by the venturi meter and orifice plate.

- To better account for the uncertainty of the flow versus differential pressure rating curves for the finished water venturi meter and orifice plate, the uncertainty of the regression equations should be further investigated and quantified.

Northbrook Facility

- Calibration of the venturi meters to determine if the manufacturer's rating curves are valid.

- Occasional inspection and measurement, if physically possible, of the inlet and throat of the venturi meters to determine any possible presence and effects of corrosion and tuberculation on the meter's accuracy.

- Installation of a backup recording device for the finished water venturi meter.

Waukegan Facility

- Establish flow versus differential pressure curves for finished water meter Nos. 1 and 2.

Wilmette Facility

- Calibration of the finished water venturi meter to determine if the manufacturer's rating curves are valid.

- Occasional inspection and measurement, if physically possible, of the inlet and throat of the finished water venturi meter to determine any possible presence and effects of corrosion and tuberculation on the meter's accuracy.

References

Mead & Hunt, Inc., *Lake Michigan Withdrawal, Central Lake County Joint Action Water Treatment Facility, City of Lake Bluff*, August 2003.

Mead & Hunt, Inc., *Lake Michigan Withdrawal, Central Park Pumping Station, City of Chicago*, June 2003.

Mead & Hunt, Inc., *Lake Michigan Withdrawal, Cermak Pumping Station, City of Chicago*, June 2003.

Mead & Hunt, Inc., *Lake Michigan Withdrawal, Chicago Avenue Pumping Station, City of Chicago*, June 2003.

Mead & Hunt, Inc., *Lake Michigan Withdrawal, Evanston Water Treatment Plant*, August 2003.

Mead & Hunt, Inc., *Lake Michigan Withdrawal, Highland Park Water Treatment Plant, City of Highland Park*, June 2003.

Mead & Hunt, Inc., *Lake Michigan Withdrawal, Lakeview Pumping Station, City of Chicago*, August 2003.

Mead & Hunt, Inc., *Lake Michigan Withdrawal, Lexington Pumping Station, City of Chicago*, June 2003.

Mead & Hunt, Inc., *Lake Michigan Withdrawal, Mayfair Pumping Station, City of Chicago*, August 2003.

Mead & Hunt, Inc., *Lake Michigan Withdrawal, Northbrook Water Treatment Plant, Village of Northbrook*, June 2003.

Mead & Hunt, Inc., *Lake Michigan Withdrawal, Roseland Pumping Station, City of Chicago*, August 2003.

Mead & Hunt, Inc., *Lake Michigan Withdrawal, 68th Street Pumping Station, City of Chicago*, June 2003.

Mead & Hunt, Inc., *Lake Michigan Withdrawal, Southwest Pumping Station, City of Chicago*, August 2003.

Mead & Hunt, Inc., *Lake Michigan Withdrawal, Springfield Avenue Pumping Station, City of Chicago*. August 2003.

Mead & Hunt, Inc., *Lake Michigan Withdrawal, Thomas Jefferson Pumping Station, City of Chicago*, August 2003.

Mead & Hunt, Inc., *Lake Michigan Withdrawal, Waukegan Water Plant*, June 2003.

Mead & Hunt, Inc., *Lake Michigan Withdrawal, Western Avenue Pumping Station, City of Chicago*, August 2003.

Mead & Hunt, Inc., *Lake Michigan Withdrawal, Wilmette Water Plant, Village of Wilmette*, June 2003.

Final Report

Technical Review of Lake Michigan Withdrawals Central Park Avenue Pumping Station

City of Chicago

Prepared for:

U.S. Army Corps of Engineers – Chicago District
Chicago, Illinois

Prepared by:

MEAD & HUNT

June 2003

Table of Contents

Page

Executive Summary . . . . . E-i

1. General Description 1
   - A. Summary of Operation 1
   - B. Flow Measurement 1
   - C. Flow Totalization 2
   - D. Calibration 2

2. Uncertainty in Metering and Measurement Components 4
   - A. Venturi-Type Meters 4
   - B. Pressure Taps 4
   - C. Meter Installation 4
   - D. Sampling 6
   - E. Pressure Differential Measurement 7
   - F. Dry Calibration of Pressure Transmitters 8
   - G. SCADA System 8

3. Sample Uncertainty Calculation for Effluent Meters 9
   - A. Uncertainty of Hourly Flow Measurements 9
     - (1) Systematic (Bias) Error 9
     - (2) Random Error 17
     - (3) Combining Systematic and Random Errors 17
   - B. Uncertainty of Daily Volume Measurements 18
   - C. Uncertainty of Annual Volume Measurements 20

4. Quality Assurance 22

5. Summary of Inadequacies in the Current Metering Systems 23

6. Recommendations for Long-Term QA/QC and Improvements to Metering 24

7. Conclusions 25

References 26

List of Appendices

Appendix

A Schematic of the Central Park Avenue Station

B Schematic of the SCADA Station

List of Tables

Table		Page
1	Flow Measurement Devices Used at the Central Park Station	2
2	Upstream Disturbances and Approximate Approach Lengths for the Various Venturi Meters at the Central Park Station	5
3	Summary of Required and Actual Downstream Straight Pipe Lengths at Central Park Station	6
4	Results of the Randomized Complete Block Design Comparison Between the Flow Data From the Chart Recorders and the 24 Hourly Readings	7
5	Summary of Flow Characteristics for the First Hourly Reading on September 1, 1998	10
6	Uncertainty From the Pressure Transmitters and Calibration Equipment for the First Hourly Reading on September 1, 1998, for Venturi Nos. 4 and 5	12
7	Absolute Bias Estimates for the First Hourly Readings Taken on September 1, 1998	14
8	Systematic, Random, and Overall Uncertainty Estimates for Hourly Flow Measurements Made on September 1, 1998	16
9	Estimated Uncertainties for Daily Volumes in September 1998 Study Period	20

Executive Summary

Currently, diversion of water from Lake Michigan for the state of Illinois is measured at the Chicago Sanitary and Ship Canal at Romeoville. The Great Lakes Mediation Memorandum of Understanding established a lakefront diversion accounting system and specified a 3-year transition period to assess the technical acceptability of moving the diversion measurement system to the lakefront. A lakefront diversion accounting system requires metering of all domestic water withdrawals from Lake Michigan and the direct diversions into the Chicago Sanitary and Ship Canal system at the Chicago River, the Calumet River, and the North Shore Channel at Wilmette. During the 3-year transition period, the U.S. Army Corps of Engineers (USACE) has been tasked to initiate a technical review of the accuracy of the reported domestic withdrawals from Lake Michigan.

The USACE retained Mead & Hunt, Inc. to evaluate the accuracy of domestic withdrawals from Lake Michigan. A total of 12 pumping stations in the city of Chicago (City) and six suburban pumping stations will be evaluated. These evaluations include revisions to the investigations conducted on the City's Mayfair and Thomas Jefferson Stations and the city of Evanston's Station by the Illinois District of the U.S. Geological Survey. This report presents a summary of the flow measurement techniques at the Central Park Station as employed by the City, as well as estimates of the uncertainty of daily and annual volume measurements. Presently, the Central Park Station consists of five electrically operated pumps and five venturi-type meters.

To obtain an estimate of the uncertainty of an individual flow measurement, we examined the manufacturer's accuracy specifications for both the primary flow measurement devices (i.e., the venturi-type meters) and secondary measurement devices (i.e., the pressure transducers). The Central Park Station's calibration technique, sampling technique, and device installation were also examined. All of the sources of uncertainty identified from this analysis were then classified as either random or systematic in nature. Using this information and the data logs provided by the City, we obtained an estimate of the uncertainty of an individual flow measurement. From this information, an estimate of the uncertainty of the daily and annual volume withdrawn from the lake can be obtained using standard statistical techniques.

Some of the important conclusions are summarized below:

- For operational purposes, the City can determine the hourly flow measurement reading to within -0.31 ± 5.64 percent at the Central Park Station. This value takes into account the random and systematic uncertainty associated with the venturi meters, pressure transmitters, calibration equipment, and recording system.

- On an annual basis, the total volume pumped through the station can be determined to within -0. 30 ± 1.47 percent. The 95-confidence interval for the annual volume is narrower than the 95-percent confidence interval for the hourly flow measurements made at the Central Park Station because the random and unknown bias errors associated with the measurement are statistically canceled when the measurements are summed over 1 year's time.

- There is some form of backup system for all the measurements made at the Central Park Station. No loss of flow data is likely under most conditions.

- The chart recorders at the Central Park Station can be used as a check on the flow measurement system. The difference between the chart recorders and the daily log sheets should be less than 2 percent. A difference greater than 2 percent indicates there may be a problem within the flow measurement system.

Technical Review of
Lake Michigan Withdrawals
Central Park Avenue Pumping Station
City of Chicago

1. General Description

A. Summary of Operation

The Central Park Avenue Pumping Station (Central Park Station) is a steam-operated plant consisting of five pumps and five venturi-type meters. Each pump's flow is dedicated to a specific venturi-type meter. The pressure differentials on the meters are measured using Rosemount 1151 Smart pressure transmitters. The output signals from the pressure transmitters are sent to both the Supervisory Control and Data Acquisition (SCADA) system and to the Eurotherm Chessell chart recorders for totalization. The SCADA system is the primary recording device and samples the pressure transmitter signals every minute. These 1-minute readings are then used to determine the average daily volume pumped through any given venturi meter. The chart recorders are used as a backup to the SCADA system. The recorders provide a 24-hour record of pumpage for each venturi-type meter and totalization figures. A schematic of the Central Park Station is provided in Appendix A.

B. Flow Measurement

The Central Park Station uses five venturi-type meters to measure the flow pumped through the station. Meter No. 4 was installed in 1936, while the other four meters were installed between 1950 and 1958. Specifications of the five venturi-type meters are shown in Table 1.[1]

[1] The coefficient of discharge was calculated using Equation (1) of this report and the β-ratio, venturi diameter, maximum flow, and maximum differential pressure that were provided by the City of Chicago.

Table 1
Flow Measurement Devices Used at the Central Park Station

Venturi No.	Manu-facturer	Model No.	Approach Pipe Diameter (in.)	Throat Diameter (in.)	β-Ratio	Coefficient of Discharge	Max. Flow Rate (MGD)*	Max. Differential Pressure (in. Water)
1	BIF	M-DF	48	32.0	0.6667	0.9917	150	262.83
2	BIF	M-C	42	24.0	0.5714	0.9822	80	268.28
3	BIF	M-DF	42	28.0	0.6667	0.9953	116	266.23
4	BIF	M-C	42	27.0	0.643	0.9916	104	257.44
5	BIF	M-C	42	30.0	0.7143	09865	136	260.61

* *Millions of gallons per day.*

C. Flow Totalization

At the Central Park Station, flow is totalized using two different methods. The SCADA system is the primary flow totalization system. First, the output from the pressure transmitters is sent to the SCADA system. The SCADA system samples the output every minute. The pressure transmitters' signal is divided by an integrator constant to convert it to a volume measurement. The sum of the 1,440, 1-minute reading is then used to determine the volume pumped through the system on a daily basis.

The pressure transmitters' signal is also sent to the chart recorders. The chart recorders are used as a backup system to the SCADA system, and provide a 24-hour graphical record of the pumpage for each venturi-type meter. Instantaneous estimates of the flow rate and total volume are also provided by the chart recorders.

D. Calibration

An effective calibration procedure should calibrate both the primary flow meter and its secondary measurement device. First, the secondary measurement device, such as a pressure transmitter, should be calibrated to ensure it is reading correctly. Then, the flow meter itself should be calibrated to ensure it is functioning properly. The City of Chicago (City) does not perform any wet calibrations on the primary flow meters or their secondary measurement devices. Thus, all of the City's calibrations can be considered inferential in nature. The secondary measurement devices (i.e., the pressure transmitters, totalizers, etc.) are dry-calibrated once a year. If the City notices a problem or discrepancy, the instruments are checked; repaired, if necessary; and calibrated. If these tasks cannot be completed immediately, the unit is taken out-of-service until it can be repaired and calibrated. When a pressure transmitter or totalizer is calibrated, a full dry- calibration is performed using the Rochester DPG-700 pressure gauge. This pressure gauge provides a "calibrated" differential pressure that can be used to

determine if the pressure transmitter or totalizer is reading properly. For the primary flow measurement devices, the City assumes the manufacturers' rating tables are correct.

After all the individual instruments have been dry-calibrated, the City performs an end-to-end calibration of the pumping station. When an end-to-end calibration is performed, the venturi-type meters are connected to manometers in order to obtain the pressure differentials. After an hour has passed, the volume measured by the manometer readings is compared to the volume measured by the totalizer. The City wants the difference between these two readings to be less than 2 percent for both the totalizer and instantaneous readings. This type of calibration is done to ensure that all the secondary measurement devices are working together properly.

During the calibration, the City takes readings both from the Meriam manometers and from the calibrated flow signal over a period of time, typically at least 1 hour. The averages of both sets of data are compared and if a significant difference in readings is detected, the calibrators are sent out for recalibration and recertification. The last recalibration was April 2000. Per the manometer's specifications, the "NIST recognizes the U-type manometer as a primary standard due to its inherent accuracy and simplicity of operation." The manometers do not require calibration; therefore, comparing the values from the calibrated flow signal to the manometer's readings is a reasonable method of checking whether the calibrators should be recertified.

2. Uncertainty in Metering and Measurement Components

A. Venturi-Type Meters

According to manufacturer's specifications, the five BIF venturi tubes have an uncertainty of ± 0.75 percent of the actual rate (over 10:1 range). Since the BIF meters have been in use for 40 to 65 years, a possibility of pitting and corrosion in the critical areas exists. The City has not inspected any of the meters at the Central Park Station. However, the meters at the Central Park Station are similar to the meter inspected by the City at the Southwest Station in that the throats of the meters are lined with bronze. Bronze is known for its ability to resist corrosion and formation of tubercles. Therefore, it is reasonable to assume that any significant corrosion or tuberculation would occur on the inlet piping only. This was the case when the meter was inspected at the Southwest Station. Since the water pumped through the Central Park Station and the Southwest Station have the same water chemistry and are treated in the same manner, it is assumed that if the venturis at the Central Park Station were inspected, the results would be similar to the results of the meter inspection at the Southwest Station. Therefore, based on the determinations made in the *Technical Review of Lake Michigan–Southwest Pumping Station*, any error due to corrosion and tuberculation is considered insignificant at the Central Park Station.

B. Pressure Taps

The pressure taps that are used to measure the pressure differential should be square with no roughness, burrs, or wire edges (Miller, 1996). If the pressure taps that are used do not meet these requirements, then a bias error would be introduced. It was not practical to inspect the pressure taps of these meters. The flow measurement devices were all constructed under a controlled-manufacturing environment with very little opportunity for a pressure tap to be constructed poorly. Thus, we assumed that the manufacturer constructed the pressure taps correctly and that no additional error would be introduced due to the pressure taps.

C. Meter Installation

An appropriate length of straight, circular pipe is required upstream of the flow meter to guarantee that the velocity profile entering the meter is not distorted and that the meter will perform properly. The length of this approach section depends on number and types of bends and fittings located upstream of the meter.

Table 2 lists the approximate approach length and upstream fittings for the various venturi meters located at the Central Park Station. The "Required Approach Length for Zero Error" and "Required Approach Length for ± 0.5-percent Error" values reported in Table 2 were taken from ISO 5167-1:1991.

Table 2
Upstream Disturbances and
Approximate Approach Lengths for the
Various Venturi Meters at the Central Park Station

Venturi No.	First Upstream Fitting	First Upstream Approach Length (feet)	Required Pipe Length for Zero Error (feet)	Required Pipe Length for ± 0.5% Error (feet)	Second Upstream Fitting	Second Upstream Approach Length (feet)	Required Pipe Length for Zero Error (feet)	Required Pipe Length for ±0.5-% Error (feet)
1	Single bend	10.2	16.0	6.0	Single bend	23.2	8.0	4.0
2	Single bend	14.7	8.8	1.8	Valve	18.3	9.6	6.1
3	Single bend	16.6	14.0	5.3	Valve	18.7	9.6	6.1
4	Single bend	27.5	14.0	5.3	Single bend	23.2	7.0	3.5
5	Single bend	6.2	14.0	7.0	Valve	16.6	9.6	6.1

As shown in Table 2, Meter Nos. 2, 3, and 4, have the required minimum lengths for the first two upstream lengths of pipe. Meter Nos. 1 and 5, however, do not meet the minimum length to the first upstream fitting requirements, but do meet the minimum length to the second upstream fitting requirements. Meter No. 1 only has an upstream length to the first fitting of 10.2 feet, which falls between the required minimum length for zero error (16.0 feet) and the required minimum length for 0.5-percent error (6.0 feet). Meter No. 5's upstream length to the first fitting is 6.2 feet, which is slightly less than the required minimum length for a 0.5-percent error (7.0 feet).

ISO 5167-1:1991 reference materials only provide lengths for zero error and 0.5-percent error. Therefore, although in some instances described above, the actual pipe lengths are significantly less than the required minimum length for a 0.5-percent error, the exact error value is unknown. Consequently, although the error may be greater than 0.5 percent, this value will be assumed in the analysis. Similarly, some pipe lengths fall between the minimum requirements for zero error and 0.5-percent error. The actual error value in this situation is also unknown. Therefore, to be conservative, 0.5-percent error will be assumed in these instances. Given these assumptions, Meter Nos. 1 and 5 are assumed to have an additional 0.5 percent of error since their upstream piping does not meet the minimum upstream piping requirements.

These inadequate pipe lengths will cause a distorted flow profile with little swirl at the venturi meter. No information was available for the bias direction for a distorted profile with little swirl. Miller reported that if a swirl was produced at the venturi meter, the flows tend to be under-reported. Therefore, it is assumed that for this application the flows of a distorted flow profile without swirl will also be under-reported. Given this, the errors for meter Nos. 1 and 5 will be -0.5 percent.

Inadequate straight piping downstream of the meter can also affect the meter's accuracy. ISO 5167-1:1991 reference materials indicate that as long as the downstream length of straight piping exceeds four times the meter's throat diameter, no additional error is expected. Unlike for the upstream piping lengths, the ISO 5167-1:1991 reference does not indicate what length would be required to provide an uncertainty of 0.5 percent or any other uncertainty value. The required and actual downstream lengths of straight pipe is summarized in Table 3. In all cases, the downstream straight pipe lengths are adequate to ensure no additional error due to downstream piping geometry.

Table 3
Summary of Required and Actual Downstream Straight Pipe Lengths at Central Park Station

Venturi No.	Throat Diameter (feet)	Required Downstream Pipe Length for Zero Error (feet)	Actual Downstream Pipe Length (feet)	Meets Required Downstream Pipe Length?
1	2.7	10.8	21.1	Yes
2	2.0	8.0	13.1	Yes
3	2.3	9.2	31.1	Yes
4	2.2	8.8	39.0	Yes
5	2.5	10.0	16.1	Yes

D. Sampling

Additional uncertainty can also be introduced due to how the flow measurement data is recorded. If, for example, a quantity varies sinusoidally, but that quantity is only measured at the times when the quantity is at a peak, then the average measurements will be higher than the true average. This would introduce a bias into the system. On the other hand, if a quantity is measured or sampled frequently, then there will be very little error introduced due to the sampling. The flow rates at the Central Park Station are sampled every minute, and these 1-minute sample readings are used to determine the average daily volume pumped through the station. There are also chart recorders that estimate the volume pumped continuously. If the 1-minute samplings and the continuous chart recordings give the same estimate for the total volume, then it can be assumed that there is no additional uncertainty introduced due to sampling. The 1-minute sampling data from the SCADA system were not readily available. Thus, the

daily logs used in the Central Park Station were used instead of the SCADA. The daily logs report an hourly instantaneous flow reading for each venturi-type meter in operation, as well as the daily volume pumped as reported by the chart recorders. If the sum of the 24 individual hourly measurements on the daily log and the volume measured by the chart recorders are statistically the same, then it can be assumed that there would be no additional uncertainty introduced due to sampling.

To determine if the chart recorders and the daily logs were reporting the same volume, a randomized complete block design was performed on some sample data with the measurement method acting as the treatments and the daily volume measurements acting as the blocks. The statistical tests were performed at the 95-percent confidence level. A summary of the results of the randomized complete block tests appears in Table 4. These results indicate that, at the 95-percent confidence level, there appears to be statistical difference between the chart recorder and the sum of the 24 individual measurements of the daily log sheets. These statistical tests were performed using 24 hourly readings from the daily log sheet and not the 1,440, 1-minute readings from the SCADA system. Therefore, the results are inconclusive. SCADA of 1,440 1-minute readings would be required to truly determine the effects of sampling on the metering system's accuracy. Since this data is not readily available for the random complete block comparison, the analysis results are inconclusive and thus, the uncertainty due to sampling accuracy will not be included in the uncertainty calculations.

Table 4
Results of the Randomized Complete Block Design Comparison Between the Flow Data From the Chart Recorders and the 24 Hourly Readings

Dates	Venturi No.	Statistical Difference
September 1–14, 1998	4	No
	5	Yes
February 1–14, 1999	1 and 2	Yes
	5	Yes
May 1-14, 1999	1 and 2	Yes
	5	No

E. Pressure Differential Measurement

The pressure differentials of all five venturi-type meters are measured using Rosemount 1151 Smart pressure transmitters. Based on the manufacturer's performance specifications, these pressure transmitters have an accuracy of ± 0.1 percent of the calibrated span. In conversations with technical support staff at Fisher-Rosemount, this accuracy includes effects caused by hysteresis, dead band, linearity, and repeatablity. The Rosemount 1151 Smart transmitters have a stability of ± 0.1 percent URL and a temperature effect of ± (0.2 percent URL plus 0.18 percent of calibrated span) per 100 degrees F. The lake temperature varies from about 32 to 70 degrees F. This is approximately a 40-degree F

temperature range. The URL of the Rosemount 1151 Smart transmitters is 750 inches of water. It is assumed that the specifications provided by the manufacturer are correct. The combination of these errors is considered to be systematic in nature. The direction of this bias is unknown.

F. Dry Calibration of Pressure Transmitters

The secondary measurement devices (i.e., pressure transmitters) are calibrated once a year using a Rochester DPG-700 module. Because the pressure transmitter is adjusted to the Rochester DPG-700 reading, all of the uncertainty components of the Rochester DPG-700 module will become a bias reported by the Rosemount 1151 pressure transducer. Since both pressure and current readings are taken from the Rochester DPG-700 module during calibration, two accuracy values apply. For the pressure reading, the accuracy is reported to be ± 0.05 percent of full scale plus one digit of display. Based on manufacturer's specification, the pressure display is shown to 0.002 pounds per square-inch gauge (PSIG), which is equal to 0.055 inches of water. The range of the Rochester DPG-700 module is 0 to 30 pounds per square inch ([psi] or 830.80 inches of water). The current reading's uncertainty is reported as ± 0.05 percent of full scale plus one digit of display. The upper range limit for the current is 50 mA. Note, however, that the two parameters of the calibrator (accuracy of the pressure module and accuracy of the current multi-meter) may not be totally uncorrelated since the pressure transmitter converts a physical measurement, the pressure, into an electrical signal while the multi-meter loop current appears to be correlated to the pressure from the pressure module. Although, these parameters may not be totally uncorrelated, it was not accounted for in this analysis. The current resolution is 0.005 mA. The direction of these biases, although unknown, will be in the same direction for all five meters in the Central Park Station.

G. SCADA System

In order for the SCADA system to determine the volume pumped through the Central Park Station, the analog signal from the pressure transmitter was converted to a digital signal using an analog input module. The manufacturer's specifications state that the analog-to-digital conversion is accurate to within ± 1.25 percent of full scale over operating range, and to within ± 0.7 percent of full scale at 25 degrees C. Since the water temperature varies from 32 to 70 degrees F, the uncertainty value of ± 1.25 percent of full scale over operating range will be used. In this case, the full scale was assumed to be the full scale of the venturi-type meter to which the pressure transmitter was connected. The error due to the analog-to-digital conversion is random in nature.

3. Sample Uncertainty Calculation for Effluent Meters

To demonstrate how the uncertainty of the measured volume pumped through the Central Park Station was estimated, a series of sample calculations follows. The method used to estimate the uncertainty is similar to that described in the *Technical Review of Lake Michigan Water Withdrawal by the City of Evanston*. Please refer to this document for background on the statistical handling of measurement uncertainty. The City provided the hourly logs of three, 2-week periods. These time periods were the first 14 days in September 1998, and February and May 1999. It was assumed that the Central Park Station's pumpages over these time periods were representative of the typical pumpages. It was also assumed that Central Park Station's pumpages were constant over each hour reported on the daily log sheets. The uncertainties can be reported as the standard deviation of the measurements (expressed by the variable *s*) or in relative terms (expressed by the variable *CV*, which is the standard deviation of the measurements divided by the mean of the measurements).

A. Uncertainty of Hourly Flow Measurements

(1) Systematic (Bias) Error

The majority of the error components are systematic in nature. These systematic errors include error from the venturi, inadequate approach length, the pressure transmitters, and the calibration equipment. To determine the uncertainty of the hourly flow measurements, all uncertainties need to be in terms of percent accuracy of actual rate. The errors associated with the venturi and the inadequate approach lengths are already expressed in these terms. However, the accuracy associated with the pressure transmitters and calibration equipment are in terms of percent accuracy per calibrated span, upper range limit (URL), full scale (FS), or a combination of these.

The standard equation for the flow through a venturi-type meter is:

$$Q = \frac{C_d A_t}{\sqrt{1-\beta^4}} \sqrt{2g\Delta h} \qquad \textit{Equation (1)}$$

Where:

Q	=	Flow rate
C_d	=	Discharge coefficient
A_t	=	Area of the throat section
β	=	Ratio of the throat diameter to the approach section diameter (also referred to as the beta-ratio)
g	=	Acceleration due to gravity
Δh	=	Pressure differential across the meter

Based on manufacturer information, the C_d values for the venturi meters range from 0.9822 to 0.9953, depending on the particular meter.

Note that the model assumes that the discharge coefficient, throat area, and throat to approach diameter ratio (i.e., β-ratio) introduce no errors to the discharge calculations. That is, the differential pressure head of the venturi meter is the only source of error or uncertainty.

At the Central Park Station, each venturi meter is dedicated to a single pump. For illustration of the uncertainty calculations, we will be examining the pumping characteristics for September 1, 1998. On this day, Pump Nos. 4 and 5 were routed through their respective venturi meters.

The throat area, A_t, for the venturi-meter No. 4 is:

$$A_t = \frac{\Pi(27.0)^2}{4} = 572.6in^2 = 3.978ft^2 \qquad \textit{Equation (2)}$$

Likewise, the throat area of venturi No. 5 is 4.909 square feet. For the first hour on September 1, 1998, 40 and 44 MGD were flowing through venturi Nos. 4 and 5, respectively. The pressure differential for venturi No. 4 is calculated below using Equation (1), and the β-ratio of 0.6430 from Table 1.

$$\Delta h = \left[\frac{Q\sqrt{1-\beta^4}}{C_d A_t \sqrt{2g}}\right]^2 = 12\left[\frac{1.547(40MGD)\sqrt{1-(0.6430)^4}}{(0.9916)(3.978ft^2)\sqrt{2(32.16ft/s^2)}}\right]^2 = 38.07in. \qquad \textit{Equation (3)}$$

The values of 12 and 1.547 that appear in *Equation (3)* are unit conversion factors to convert feet to inches and MGD to cubic feet per second (cfs), respectively. A summary of flow characteristics for the first hourly reading of the two venturi-type meters on September 1 appears in Table 5.

Table 5
Summary of Flow Characteristics for the First Hourly Reading on September 1, 1998

Venturi No.	Throat Area (sq. ft.)	Flow Rate (MGD)	Pressure Differential (in. Water)
4	3.978	40	38.07
5	4.909	44	27.27

The pressure differentials of all the venturi-type meters are measured using Rosemount 1151 Smart pressure transmitters. Based on the manufacturer's performance specifications, these pressure transmitters have an accuracy of ± 0.1 percent of the calibrated span, a stability of ± 0.10 percent of URL, and temperature effect of ± (0.2 percent URL, plus 0.18 percent of calibrated span) per 100 degrees C. The calibrated spans of venturi Nos. 4 and 5 are 257.44 and 260.61 inches of water, respectively, and the URL of the transmitters is 750 inches of water. Thus, the uncertainty in the pressure differential measurement due to accuracy would be ± 0.257 inches of water (i.e., ± 0.001 times 257.44) for venturi meter No. 4. The uncertainty in the flow rate due to the accuracy of the pressure transmitter for venturi meter No. 4 would then be:

$$CV_{Qa} = \frac{Xs_p}{\Delta h} = \frac{(0.5)(\pm 0.257in)}{38.07in} = \pm 0.338\% \qquad \textit{Equation (4)}$$

Where:

CV_{Qa}	=	Uncertainty in the flow rate due to the accuracy of the pressure transmitter
s_p	=	Uncertainty in the pressure transmitter (due to transmitter accuracy in this case)
X	=	Sensitivity coefficient equal to 0.5 for the pressure transducer as the flow is directly proportional to the square root of the pressure differential in Equation (1)
Δh	=	Pressure differential

See *Technical Review of Lake Michigan Water Withdrawals by the City of Evanston* for additional information on the sensitivity coefficient. The uncertainty in the flow rate due to the transmitter's accuracy, stability, and temperature affect for meter Nos. 4 and 5 are shown in Table 6.

The pressure transmitters are calibrated using a Rochester DPG-700 calibrator. Since both pressure and current readings are taken from the calibrator, two independent accuracy values apply. For the pressure reading, the accuracy is reported to be ± 0.05 percent of full scale, plus one digit of display. Based on manufacturer's specification, the pressure display is shown to 0.002 PSIG, which is equal to 0.055 inches of water. The range of the Rochester DPG-700 module is 0 to 30 psi (or 830.80 inches of water). Thus, the uncertainty in the pressure component of the calibrator would be ± 0.470 inches of water (i.e., ± 0.0005 times 830.80, plus 0.055) for venturi meter No. 4. The uncertainty in the flow rate due to pressure component of the calibrator for venturi meter No. 4 would then be:

$$CV_{Qa} = \frac{Xs_p}{\Delta h} = \frac{(0.5)(\pm 0.470in)}{38.07in} = \pm 0.618\% \qquad \textit{Equation (5)}$$

The current reading's uncertainty is reported as ± 0.05 percent of full scale, plus one digit of display. The upper range limit for the current is 50 mA. The current resolution is 0.005 mA. Thus,

the uncertainty in the current component of the calibrator would be ± 0.030 mA (i.e., ± 0.0005 times 50, plus 0.005) for venturi meter No. 4.

The uncertainty in the flow rate due to current component of the calibrator for venturi meter No. 4 would then be:

$$CV_{Qa} = \frac{Xs_i}{\Delta i} = \frac{(1.0)(\pm 0.030mA)}{10.2mA} = \pm 0.295\% \qquad \textit{Equation (6)}$$

Where:

s_i = Uncertainty due to the current reading for the calibrator pressure differential
Δi = Current differential

The current differential is known to be linear to the flow rate with 4 mA corresponding to zero flow, and 20 mA corresponding to flow meter capacity, which is 104 MGD for meter No. 4 and 136 MGD for meter No. 5. Note that for this calculation, the sensitivity coefficient, *X*, is 1.0 since the flow rate is directly proportional to the current (i.e., a linear relationship). Using this relationship, for the first hour on September 1, the corresponding currents would be 10.2 and 9.2 mA for meter Nos. 4 and 5, respectively. This process was repeated for meter No. 5's DPG-700 pressure gauge accuracy. A summary of these estimates appears in Table 6.

Table No. 6
Uncertainty From the Pressure Transmitters and Calibration Equipment for the First Hourly Reading on September 1, 1998, for Venturi Nos. 4 and 5

Venturi No.	Instrument	Uncertainty Source	CV for Δh or ΔmA	URL or Calibrated Span	Uncertainty for Δh or ΔmA	CV for Flow (%)
4	Rosemount	Pressure transmitter	0.1% of calibrated span	257.44 in. water	0.257 in. water	0.338
4	Rosemount	Pressure transmitter	0.1% of URL	750 in. water	0.750 in. water	0.985
4	Rosemount	Pressure transmitter	(0.2% URL + 0.18% calibrated span)/100°F	750 in. water and 257.44 in. water	1.963 in. Water	1.032
4	DPG-700	Calibrator	0.05% FS + 1 digit*	830.8 in. water	0.470 in. water	0.618
4	DPG-700	Calibrator	0.05% FS + 1 digit**	50 mA	0.030 mA	0.295

Table No. 6
Uncertainty From the Pressure Transmitters and Calibration Equipment for the First Hourly Reading on September 1, 1998, for Venturi Nos. 4 and 5

Venturi No.	Instrument	Uncertainty Source	CV for Δh or ΔmA	URL or Calibrated Span	Uncertainty for Δh or ΔmA	CV for Flow (%)
5	Rosemount	Pressure transmitter	0.1% of calibrated span	260.61 in. water	0.261 in. water	0.478
5	Rosemount	Pressure transmitter	0.1% of URL	750 in. water	0.750 in. water	1.375
5	Rosemount	Pressure transmitter	(0.2% URL + 0.18% calibrated span)/100°F	750 in. Water and 260.61 in. water	1.969 in. water	1.444
5	DPG-700	Calibrator	0.05% FS + 1 digit*	830.8 in. water	0.470 in. water	0.863
5	DPG-700	Calibrator	0.05% FS + 1 digit**	50 mA	0.030 mA	0.327

* *One digit is equal to 0.055 in. Water*
** *One digit is equal to 0.005 mA*

In this study, the bias uncertainty estimates will be broken down into three categories:

- Bias uncertainty with a known bias direction.
- Bias uncertainty with an unknown bias, but known to be in the same direction for each meter.
- Bias uncertainty with an unknown bias direction.

Explanation of this breakdown was detailed in *Technical Review of Lake Michigan Water Withdrawal by the City of Evanston*. Table 7 lists the type of bias uncertainty for each of the bias estimates for the first hourly readings for venturi meter Nos. 4 and 5. Additionally, Table 7 also

provides the absolute bias estimates for the first hourly readings taken from venturi meter Nos. 4 and 5 based on the following equation:

$$s_b = CV_{flow} \cdot Q_{\substack{first \\ hour}} = (0.00338)(40\,MGD) = 0.135\,MGD \qquad \textit{Equation (7)}$$

Where:

S_b = Standard deviation (or absolute uncertainty) of the flow measurement due to the respective systematic uncertainty estimate

CV_{flow} = Relative uncertainty in the flow rate

$Q_{first\ hour}$ = Flow for the first hour

Table 7
Absolute Bias Estimates for the First Hourly Readings Taken on September 1, 1998

Venturi No.	Bias Component	Type of Bias	CV_b(%)	S_b (MGD)
4	Venturi	Direction unknown	± 0.75	± 0.300
	Approach lengths	N/A	N/A	N/A
	Pressure transmitters			
	– *Accuracy*	Direction unknown	± 0.338	± 0.135
	– *Stability*	Direction unknown	± 0.985	± 0.394
	– *Temperature*	Direction unknown	± 1.032	± 0.413
	Calibrator			
	– *Pressure*	Direction unknown,	± 0.618	± 0.247
	– *Current*	but in same direction for all meters	± 0.295	± 0.118
5	Venturi	Direction unknown	± 0.750	± 0.330
	Approach lengths	Direction known	- 0.500	- 0.220
	Pressure transmitters			
	– *Accuracy*	Direction unknown	± 0.478	± 0.210
	– *Stability*	Direction unknown	± 1.375	± 0.605
	– *Temperature*	Direction unknown	± 1.444	± 0.635
	Calibrator			
	– *Pressure*	Direction unknown,	± 0.863	± 0.380
	– *Current*	but in same direction for all meters	± 0.327	± 0.144

The systematic uncertainty estimates for meter Nos. 4 and 5 can be combined as shown below in *Equation (8)* to determine the overall hourly systematic uncertainty for September 1, 1998. To determine the uncertainty of the sum of the three measurements, the individual uncertainty estimates should be combined on the basis of absolute uncertainty (i.e., standard deviations) and not relative uncertainty (i.e., coefficient of variation).

$$S_b = \sum_{i=1}^{l_1} \sum_{j=1}^{m} S_{b_{ij\ \text{direction known}}} \pm \left[\sum_{i=1}^{l_2} \sum_{j=1}^{m} S^2_{b_{ij\ \text{direction unknown}}} + \sum_{i=1}^{l_3} \left(\sum_{j=1}^{m} S_{b_{ij\ \text{unknown but in same direction}}} \right)^2 \right]^{\frac{1}{2}} \qquad \textit{Equation (8)}$$

Where:

S_b	=	Combined uncertainty or standard deviation of the flow measurement.
$S_{bij\ direction\ known}$	=	Absolute bias uncertainty of known direction for measurement *i,j*.
$S_{bij\ unknown\ but\ in\ same\ direction}$	=	Absolute bias uncertainty of unknown direction but known to occur in the same direction for each meter for measurement *i,j*.
$S_{bij\ direction\ unknown}$	=	Absolute bias uncertainty of unknown direction for measurement *i, j*.
m	=	The number of meters.
l_1, l_2, l_3	=	The number of uncertainty components in $S_{bij\ direction\ known}$, $S_{bij\ direction\ unknown}$, and $S_{bij\ unknown\ but\ in\ same\ direction}$, respectively.

For the first hour, using *Equation (8)*, the overall absolute bias uncertainty, S_b, was found to be -0.220 ± 1.348 MGD, which corresponds to a relative uncertainty, CV_b, of -0.26 ± 1.61 percent (i.e., -0.220 ± 1.348 MGD divided by the total flow rate of 84 MGD). This process was repeated for each of the 24-hour readings taken during the day. The results are provided in Table 8 (table combining random and bias).

Table 8
Systematic, Random, and Overall Uncertainty Estimates for Hourly Flow Measurements Made on September 1, 1998

Hour	Total Flow (MGD)	CV_b (%)	S_b (MGD)	CV_r (%)	S_r (MGD)	Overall CV (%)
1	84	-0.26 ± 1.61	-0.220 ± 1.348	± 2.55	± 2.140	-0.26 ± 3.01
2	80	-0.29 ± 1.72	-0.235 ± 1.378	± 2.68	± 2.140	-0.29 ± 3.18
3	75	-0.29 ± 1.93	-0.220 ± 1.449	± 2.85	± 2.140	-0.29 ± 3.45
4	75	-0.29 ± 1.93	-0.220 ± 1.449	± 2.85	± 2.140	-0.29 ± 3.45
5	87	-0.29 ± 1.49	-0.255 ± 1.297	± 2.46	± 2.140	-0.29 ± 2.88
6	91	-0.29 ± 1.38	-0.265 ± 1.259	± 2.35	± 2.140	-0.29 ± 2.73
7	118	-0.25 ± 0.96	-0.300 ± 1.133	± 1.81	± 2.140	-0.25 ± 2.05
8	116	-0.25 ± 0.99	-0.285 ± 1.149	± 1.84	± 2.140	-0.25 ± 2.09
9	111	-0.24 ± 1.06	-0.270 ± 1.172	± 1.93	± 2.140	-0.24 ± 2.20
10	107	-0.25 ± 1.11	-0.265 ± 1.184	± 2.00	± 2.140	-0.25 ± 2.29
11	107	-0.25 ± 1.11	-0.265 ± 1.184	± 2.00	± 2.140	-0.25 ± 2.29
12	110	-0.26 ± 1.05	-0.285 ± 1.156	± 1.95	± 2.140	-0.26 ± 2.21
13	112	-0.26 ± 1.02	-0.290 ± 1.148	± 1.91	± 2.140	-0.26 ± 2.17
14	111	-0.26 ± 1.04	-0.290 ± 1.150	± 1.93	± 2.140	-0.26 ± 2.19
15	113	-0.27 ± 1.01	-0.305 ± 1.136	± 1.89	± 2.140	-0.27 ± 2.14
16	111	-0.27 ± 1.03	-0.300 ± 1.143	± 1.93	± 2.140	-0.27 ± 2.19
17	108	-0.27 ± 1.07	-0.290 ± 1.157	± 1.98	± 2.140	-0.27 ± 2.25
18	114	-0.27 ± 0.99	-0.305 ± 1.134	± 1.88	± 2.140	-0.27 ± 2.12
19	118	-0.26 ± 0.96	-0.305 ± 1.129	± 1.81	± 2.140	-0.26 ± 2.05
20	120	-0.26 ± 0.94	-0.310 ± 1.123	± 1.78	± 2.140	-0.26 ± 2.01
21	118	-0.26 ± 0.96	-0.305 ± 1.129	± 1.81	± 2.140	-0.26 ± 2.05
22	122	-0.26 ± 0.92	-0.315 ± 1.119	± 1.75	± 2.140	-0.26 ± 1.98
23	88	-0.28 ± 1.46	-0.250 ± 1.288	± 2.43	± 2.140	-0.28 ± 2.84
24	84	-0.30 ± 1.59	-0.255 ± 1.334	± 2.55	± 2.140	-0.30 ± 3.00

(2) Random Error

Only the SCADA uncertainty was identified as being random in nature. The manufacturer states that the analog-to-digital conversion can take place with an uncertainty of ± 1.25 percent of full scale. As mentioned earlier, it was assumed that full scale refers to full scale of the venturi-type meter. Thus, for venturi No. 4 with a capacity of ± 104 MGD, the absolute random uncertainty due to the SCADA system would be ± 1.30 MGD (± 0.0125 times 104 MGD). Hence, the relative uncertainty estimate for the SCADA system would be ± 3.25 percent (i.e., ± 1.30 MGD divided by 40 MGD). Similarly, the absolute random uncertainty for venturi No. 5 would be ± 1.70 MGD (i.e., ± 0.0125 times 136 MGD), and the relative random uncertainty would be ± 3.86 percent (i.e., ± 1.70 MGD divided by 44 MGD).

The overall absolute random uncertainty can be determined by combining the absolute random uncertainties due to the SCADA system for venturi Nos. 4 and 5 using the root-mean-square method. The method results in an overall random uncertainty of ± 2.14 MGD or a random relative uncertainty, CV_r, ± 2.55 percent (i.e., ± 2.14 MGD divided by 84 MGD). This process was repeated for each of the 24-hour readings taken during the day. The results are provided in Table 8 (table combining random and bias).

(3) Combining Systematic and Random Errors

The systematic and random errors can be combined using the following methodology:

$$S_b = \sum_{i=1}^{l_1}\sum_{j=1}^{m} S_{b_{ij\,\text{direction known}}} \pm \left[\sum_{i=1}^{l_2}\sum_{j=1}^{m} S^2_{b_{ij\,\text{direction unknown}}} + \sum_{i=1}^{l_3}\left(\sum_{j=1}^{m} S_{b_{ij\,\text{unknown but in same direction}}}\right)^2 + \sum_{i=1}^{l_4}\sum_{j=1}^{m} S^2_{r_{ij}}\right]^{\frac{1}{2}} \qquad \textit{Equation (9)}$$

Where:

S_{rij}	=	Absolute random uncertainty
l_4	=	The number of uncertainty components in S_{rij}

Using *Equation (9)*, the overall uncertainty of the sum of the two flow measurements made in the first hour of September 1, 1998, is -0.220 ± 2.530 MGD, or -0.26 ± 3.01 percent.

This process is repeated for each of the 24-hour readings taken during the day and the results can be seen in Table 8. The average uncertainty, *CV*, of an hourly flow measurement performed on September 1 was -0.27 ± 2.45 percent. This implies that the 95-percent confidence interval, *CI*, for an hourly flow measurement would be -0.27 ± 5.10 percent (-0.27 ± 2.45 times 2.069]). Over the entire study period, the average uncertainty of an hourly flow measurement, *CV*, was found to

be -0.31 ± 2.88 percent. The average 95-percent confidence interval of an hourly flow measurement, *CI*, would then be equal to -0.31 ± 5.64 percent (-0.31 ± 2.88 times1.960]).

B. Uncertainty of Daily Volume Measurements

An estimate of the uncertainty of the daily volume pumped through the station can be obtained from the 24 hourly flow measurements. The volume pumped through the Central Park Station is the average of the 24 hourly flow measurements times 1 day. For September 1, 1998, the average volume pumped through the station is 103.3 million gallons (MG).

The uncertainty of the systematic daily volume measurements can be determined using the following equation:

$$CV_{Vb} = CV_{bV_{\substack{direction \\ known}}} + \frac{\Delta t}{m_v}\left(\sum_{k=1}^{n} Q_k^2 CV^2_{b_{k_{\substack{direction \\ unknown}}}} + \left(\sum_{k=1}^{n} Q_k CV_{b_{k_{\substack{unknown \\ but\ in\ same \\ direction}}}}}\right)^2\right)^{\frac{1}{2}} \qquad \textit{Equation (10)}$$

Where:

CV_{Vb}	=	Relative uncertainty of the total bias volume measurement.
$CV_{bV\ direction\ known}$	=	Bias with known direction of the total volume measurement.
$CV_{bk\ direction\ unknown}$	=	Bias error in individual flow measurement *k* where the bias direction is unknown.
$CV_{bk\ unknown\ but\ in\ same\ direction}$	=	Bias error in individual flow measurement *k* where the bias direction is unknown, but in the same direction for all meters.
Δt	=	Time increment.
Q_k	=	Value of flow measurement *k*.
m_V	=	Sum of all *n* volume measurements. In this case, the uncertainty of the measured volume can be expressed in relative terms because the terms Q_k and m_V take into account the magnitude of the individual measurements.

Using *Equation (10)*, the relative systematic error, CV_{vb}, was -0.27 ± 0.61 percent for September 1, 1998.

The average random uncertainty component for the daily volume can be obtained from the following expression:

$$CV_{Vr} = \pm \frac{\Delta t}{m_v}\left(\sum_{k=1}^{n} Q_k^2 CV_{rk}^2\right)^{\frac{1}{2}} \qquad \textit{Equation (11)}$$

Where:

CV_{rk} = Random error in individual flow measurement *k*.

CV_{Vr} = Relative uncertainty of the volume measurement.

Using *Equation (11)*, the relative random uncertainty of the daily volume, CV_{vr}, for September 1, 1998, is ± 0.42 percent.

The overall uncertainty of the daily volume can then be found by combining the systematic and random uncertainty components in the following manner:

$$CV_V = CV_{bV_{\substack{direction\\known}}} + \frac{\Delta t}{m_v}\left(\sum_{k=1}^{n} Q_k^2 CV_{b_{k_{\substack{direction\\unknown}}}}^2 + \left(\sum_{k=1}^{n} Q_k CV_{b_{k_{\substack{unknown\\but\ in\ same\\direction}}}}\right)^2 + \sum_{k=1}^{n} Q_k^2 CV_{r_k}^2\right)^{\frac{1}{2}} \qquad \textit{Equation (12)}$$

For the date in question, the overall uncertainty of the daily volume, CV_V, was found to be -0.27 ± 0.75 percent, or -0.28 ± 0.775 MG (-0.27 ± 0.75 percent times 103.3 MG). The 95-percent confidence interval on the daily volume, CI_v, would then be -0.27 ± 1.55 percent (-0.27 ± 0.75 times 2.069]). Note that the 95-percent confidence interval for the daily volume (-0.27 ± .55 percent) is much narrower than the 95-percent confidence interval for the hourly flow measurement (-0.27 ± 5.10 percent). This is because the random errors and systematic errors with unknown direction associated with an hourly flow measurement are statistically canceled when they are summed over a day's time. The average random, systematic, and overall uncertainty for each day in each 2-week study period were found using the above method. A summary of the daily volume uncertainties for the September 1998 study period appears in Table 9.

Table 9
Estimated Uncertainties for Daily Volumes in September 1998 Study Period

Date	CV_{Vb} (%)	CV_{Vr} (%)	CV_V (%)	CI_V (%)
September 1	-0.27 ± 0.61	± 0.42	-0.27 ± 0.75	-0.27 ± 1.55
September 2	-0.27 ± 0.59	± 0.41	-0.27 ± 0.72	-0.27 ± 1.48
September 3	-0.26 ± 0.60	± 0.42	-0.26 ± 0.73	-0.26 ± 1.51
September 4	-0.26 ± 0.60	± 0.42	-0.26 ± 0.73	-0.26 ± 1.51
September 5	-0.26 ± 0.61	± 0.42	-0.26 ± 0.74	-0.26 ± 1.54
September 6	-0.26 ± 0.54	± 0.39	-0.26 ± 0.67	-0.26 ± 1.38
September 7	0.26 ± 0.63	± 0.43	-0.26 ± 0.76	-0.26 ± 1.57
September 8	-0.27 ± 0.66	± 0.44	-0.27 ± 0.79	-0.27 ± 1.63
September 9	-0.26 ± 0.65	± 0.44	-0.26 ± 0.78	-0.26 ± 1.62
September 10	-0.26 ± 0.61	± 0.42	-0.26 ± 0.74	-0.26 ± 1.53
September 11	-0.26 ± 0.60	± 0.42	-0.26 ± 0.74	-0.26 ± 1.52
September 12	-0.26 ± 0.58	± 0.41	-0.26 ± 0.71	-0.26 ± 1.46
September 13	-0.26 ± 0.57	± 0.40	-0.26 ± 0.69	-0.26 ± 1.44
September 14	-0.26 ± 0.62	± 0.43	-0.26 ± 0.75	-0.26 ± 1.56

C. Uncertainty of Annual Volume Measurements

The uncertainty in the annual volume pumped through the station can be estimated using the uncertainty in daily volume measurements. As mentioned earlier, the study period consisted of 2-week periods in September 1998, and February and May of 1999. In total, there were 42 days in the study period. Over this time period, the average systematic uncertainty for a daily volume measurement, CV_b, was determined to be -0.30 ± 0.80 percent (± 0.27 percent from unknown biases and ± 0.75 percent from unknown biases known to be in the same direction for all meters), and the average random uncertainty for a daily volume measurement, CV_r, was estimated to be ± 0.48 percent. The average uncertainty in daily volume would then be -0.30 ± 0.93 percent, and the average 95-percent confidence interval for the

daily volume would be -0.30 ± 1.92 percent (-0.31 ±[0.93 times 2.069]). The uncertainty in the annual volume pumped through the Central Park Station, CV_V can be determined as follows:

$$CV_V = CV_{b_{\substack{direction \\ known}}} \pm \left(\frac{CV^2_{b_{\substack{direction \\ unknown}}}}{n} + CV^2_{b_{\substack{unknown \\ but\ in\ same \\ direction}}} + \frac{CV_r^2}{n} \right)^{\frac{1}{2}}$$

$$= -0.30 \pm \left(\frac{0.27^2}{365} + 0.75^2 + \frac{0.48^2}{365} \right)^{\frac{1}{2}} = -0.30 \pm 0.75\%$$

Equation (13)

The 95-percent confidence interval of the annual volume, CI_v, would then simply be -0.30 ± 1.47 percent (-0.31 ±[0.75 times 1.960]). The 95-percent confidence interval for the annual volume (-0.30 ± 1.47 percent) is slightly less than the 95-percent confidence interval for the daily volume (-0.30 ± 1.92 percent). Most of the random error and unknown bias error associated with the daily volume measurement is statistically canceled when determining the uncertainty of the annual volume.

4. Quality Assurance

If the water accounting system is moved to the lakefront, there is a concern that if one of the direct diverter's flow measurement systems goes down, that there would be no way to measure the withdrawals from the lake. Thus, it is desirable that the direct diverters have a backup measurement system and, if possible, some other independent check on the measurements to ensure that the measurements are reasonable and accurate.

There are many backup systems at the Central Park Station. If a problem is detected in a particular venturi meter or its corresponding pressure transmitter, that venturi meter and its pump can be shutdown and a different venturi and pump can be used in its place for metering and distribution. Also, all of the venturi meters at the Central Park Station are equipped with manometers that can be used as a backup to the pressure transmitters.

The SCADA system used to totalize the flow consists of several elements. A schematic of the SCADA system showing the flow and storage of data is provided in Appendix B. The signal from each pressure transmitter is sent to a computer (CP2), located at the plant, where the flow data is displayed, processed, and temporally stored. This computer is only capable of storing 3 days' worth of data. Therefore, the control center computer system (CP3) located at the Jardine water treatment plant reads the data from the CP2 and is responsible for storing and maintaining the flow records. Note that if CP2 were to fail, the data would not be communicated to CP3. The CP3 central control computer system consists of two computers with automatic failover such that if one computer fails, the other one takes over automatically. Both of these computers store data from the pumping station so none of the data should be lost in the event that either computer fails. The data stored on CP3 is also backed up on tape.

The data is transferred from the CP2 computer at the plant to the CP3 computer at Jardine over a dedicated communication line (i.e., a telephone line). This communication line does not have a backup. However, since the CP2 at the station can store up to 3 days of data, no data will be lost if the line is repaired within 3 days.

If the SCADA system were to fail, flow data can still be obtained from the chart recorders or venturi manometers at the Central Park Station. This data would then be manually inputted in the SCADA system once the problems with the SCADA system were corrected.

The chart recorder system is used as an independent check of the flow measurement system used at the Central Park Station. If the average of the 24-hour readings on the daily log sheet differs by more than 2 percent from the chart recorder, the City investigates the source of the discrepancy. Thus, by monitoring the difference between the chart recorder and the daily log sheets, the City will be able to catch malfunctions in their measurement system relatively quickly.

5. Summary of Inadequacies in the Current Metering Systems

For the most part, the current metering system provided a reasonable level of accuracy and has acceptable quality assurance. The following portion of the metering system appears to be deficient.

- The actual venturi meters are not calibrated. Rather, the City assumes that the manufacturer's rating curves are correct. Calibration of the venturis would confirm or deny this assumption.

- The overall accuracy in estimating the water supply pumpage is dependent upon many measurement and analysis functions. The documented technical review and much previous work were focused on the accuracy of the pumpage measurements in hardware (i.e., meters, calibrator, pressure transmitter, etc.) and software (SCADA, etc.). This analyses does not take into account procedural errors such as inconsistent data in water supply pumpage as a result of the reporting mechanism.

6. Recommendations for Long-Term QA/QC and Improvements to Metering

Recommendations for long-term QA/QC and improvements to metering are as follows:

- Calibration of the venturi meters to determine if the manufacturer's rating curves are valid.
- Occasional inspection and measurement, if physically possible, of the inlet and throat of the venturi meters to determine any possible presence and effects of corrosion and tuberculation on the meter's accuracy.
- The results of the sampling uncertainty analysis were inconclusive. One-minute SCADA should be obtained and compared to the chart recorder data for a study period to determine whether sampling might affect the results of this study.
- Routine auditing of various water withdrawal reports, as part of the long-term QA/QC, as a means of accounting for procedural errors.

7. Conclusions

Some of the important conclusions are summarized below:

- For operational purposes, the City can determine the hourly flow measurement reading to within -0.31±5.64 percent at the Central Park Station. This value takes into account the random and systematic uncertainty associated with the venturi meters, pressure transmitters, calibration equipment, and recording system.

- On an annual basis, the total volume pumped through the station can be determined to within -0.30 ± 1.47 percent. The 95-confidence interval for the annual volume is narrower than the 95-percent confidence interval for the hourly flow measurements made at the Central Park Station because the random and unknown bias errors associated with the measurement are statistically canceled when the measurements are summed over 1 year's time.

- There is some form of backup system for all the measurements made at the Central Park Station. No loss of flow data is likely under most conditions.

- The chart recorders at the Central Park Station can be used as a check on the flow measurement system. The difference between the chart recorders and the daily log sheets should be less than 2 percent. A difference greater than 2 percent indicates there may be a problem within the flow measurement system.

References

American Society of Mechanical Engineers, *Fluid Meters: Their Theory and Application*. ASME, New York, 6th ed., 1971.

Ametek Power Instruments, "Rochester DPG-700 Precision Digital Pressure Gauge," http://www.rochester. com.

Analog Input Module PPX:505-6108A Electrical Specification [for the SCADA system], n.d.

Cheremisinoff, Nicholas P. and Paul N. Cheremisinoff. *Flow Measurements for Engineers and Scientists*. Marcel Dekker, Inc., New York, 1888.

City of Chicago. Correspondence between Mr. R. W. Pence of the City of Chicago and David Clemmans of Energy Associates Inc., regarding the "BIF Flow Metering Equipment," August 18, 1977.

Fischer-Porter, *Electronic Differential Pressure Transmitter–Type 50DPF100 Specification*, n.d.

Fisher-Rosemount, *Model 1151 Smart Pressure Transmitters*, Rev. A1. Date not provided.

Hutton, Stanley P. *The Prediction of Venturi-Meter Coefficients and Their Variation with Roughness and Age*.

International Organization for Standardization, *Measurements of Fluid Flows by Means of Pressure Differential Devices*, ISO, Switzerland, 1991.

Mead & Hunt, Inc., *Technical Review of Lake Michigan Water Withdrawals by the City of Evanston–Draft*, July 2002.

Mead & Hunt, Inc., *Technical Review of Lake Michigan Withdrawals – Southwest Pumping Station*, July 2002.

Meriam Instrument, *General Installation, Operation and Maintenance Instructions for Meriam Manometers*, April 1992.

Miller, Richard W., *Flow Measurement Engineering Handbook*, McGraw-Hill, New York, 1996.

Spitzer, David W., *Industrial Flow Measurement*. Instrument Society of America, North Carolina, 1990.

Final Report

Technical Review of Lake Michigan Withdrawals Cermak Pumping Station

City of Chicago

Prepared for:

U.S. Army Corps of Engineers – Chicago District
Chicago, Illinois

Prepared by:

MEAD & HUNT

June 2003

Table of Contents

Page

Executive Summary . . . . . E-i

1. General Description 1
   A. Summary of Operation 1
   B. Flow Measurement 1
   C. Flow Totalization 2
   D. Calibration 2

2. Uncertainty in Metering and Measurement Components 4
   A. Venturi-Type Meters 4
   B. Pressure Taps 4
   C. Meter Installation 4
   D. Sampling 6
   E. Pressure Differential Measurement 7
   F. Dry Calibration of Pressure Transmitters 7
   G. SCADA System 8

3. Sample Uncertainty Calculation for Effluent Meters 9
   A. Uncertainty of Hourly Flow Measurements 9
      (1) Systematic (Bias) Error 9
      (2) Random Error 16
      (3) Combining Systematic and Random Errors 17
   B. Uncertainty of Daily Volume Measurements 18
   C. Uncertainty of Annual Volume Measurements 20

4. Quality Assurance 22

5. Summary of Inadequacies in the Current Metering Systems 23

6. Recommendations for Long-Term QA/QC and Improvements to Metering 24

7. Conclusions 25

List of Appendices

Appendix

A Schematic of the Cermak Station

B Schematic of the SCADA Station

List of Tables

Table		Page
1	Flow Measurement Devices Used at the Cermak Station	1
2	Upstream Disturbances and Approximate Approach Lengths for the Various Venturi Meters at the Cermak Station	5
3	Results of the Random Complete Block Design Comparisons for the Mayfair, Central Park, Roseland, Springfield, and Western Pumping Stations	6
4	Summary of Flow Characteristics for the 9:00 a.m. Reading on September, 1998	11
5	Uncertainty From Pressure Transmitters and Calibration Equipment for the 9:00 a.m. Reading on September 1, 1998, for Venturi Nos. 2 and 3	12
6	Absolute Bias Estimates for the 9:00 a.m. Readings Taken on September 1, 1998	14
7	Systematic, Random, and Overall Uncertainty Estimates for 9:00 a.m. Flow Measurements Made on September 1, 1998	15
8	Estimated Uncertainties for Daily Volumes in September 1, 1998, Study Period	20

Executive Summary

Currently, diversion of water from Lake Michigan for the state of Illinois is measured at the Chicago Sanitary and Ship Canal at Romeoville. The Great Lakes Mediation Memorandum of Understanding established a lakefront diversion accounting system and specified a 3-year transition period to assess the technical acceptability of moving the diversion measurement system to the lakefront. A lakefront diversion accounting system requires metering of all domestic water withdrawals from Lake Michigan and the direct diversions into the Chicago Sanitary and Ship Canal system at the Chicago River, the Calumet River, and the North Shore Channel at Wilmette. During the 3-year transition period, the U.S. Army Corps of Engineers (USACE) has been tasked to initiate a technical review of the accuracy of the reported domestic withdrawals from Lake Michigan.

The USACE retained Mead & Hunt, Inc., to evaluate the accuracy of domestic withdrawals from Lake Michigan. A total of 12 pumping stations in the City of Chicago (City) and six suburban pumping stations will be evaluated. These evaluations include revisions to the investigations conducted on the City's Mayfair and Thomas Jefferson Stations and the city of Evanston's Station by the Illinois District of the U.S. Geological Survey. This report presents a summary of the flow measurement techniques at the Cermak Station as employed by the City, as well as estimates of the uncertainty of daily and annual volume measurements. Presently, the Cermak Station consists of six electrically operated pumps and six venturi-type meters.

To obtain an estimate of the uncertainty of an individual flow measurement, we examined the manufacturer's accuracy specifications for both the primary flow measurement devices (i.e., the venturi-type meters) and secondary measurement devices (i.e., the pressure transducers). The Cermak Station's calibration technique, sampling technique, and device installation were also examined. All of the sources of uncertainty identified from this analysis were then classified as either random or systematic in nature. Using this information and the data logs provided by the City, we obtained an estimate of the uncertainty of an individual flow measurement. From this information, an estimate of the uncertainty of the daily and annual volume withdrawn from the lake can be obtained using standard statistical techniques.

Some of the important conclusions are summarized below:

- For operational purposes, the City can determine the hourly flow measurement reading to within -1.00 ± 3.61 percent at the Cermak Station. This value takes into account the random and systematic uncertainty associated with the venturi meters, pressure transmitters, calibration equipment, and recording system.

- On an annual basis, the total volume pumped through the station can be determined to within -1.00 ± 0.47 percent. The 95-confidence interval for the annual volume is narrower than the 95-percent confidence interval for the hourly flow measurements made at the Cermak Station because the random and unknown bias errors associated with the measurement are statistically canceled when the measurements are summed over a year's time.

- With the exception of the SCADA system, all the metering system has redundancy or backup for quality assurance. There is no backup data recorder at this time.

- There is no independent check of the flow measurement system that can be used as an indicator when there is a problem within the system.

Technical Review of
Lake Michigan Withdrawals
Cermak Pumping Station
City of Chicago

1. General Description

A. Summary of Operation

The Cermak Pumping Station (Cermak Station) is an electrically operated plant consisting of six pumps and six venturi-type meters. The flow of each pump is dedicated to a specific venturi-type meter. The pressure differentials on the meters are measured using Fisher Porter pressure transmitters. The output signals from the pressure transmitters are sent to the Supervisory Control and Data Acquisition (SCADA) system for totalization. The SCADA system samples the pressure transmitter signals every minute. These 1-minute readings are then used to determine the average daily volume pumped through any given venturi meter. No backup recording system to the SCADA system exists at the Cermak Station. A schematic of the Cermak Station is provided in Appendix A.

B. Flow Measurement

The Cermak Station uses six identical venturi-type meters to measure the flow pumped through the station. All six meters were installed in 1935. The specifications are shown in Table 1.[1]

Table 1
Flow Measurement Devices Used at the Cermak Station

Manu-facturer	Model No.	Approach Pipe Diameter (in.)	Throat Diameter (in.)	β-Ratio	Coefficient of Discharge	Max. Flow Rate (MGD)*	Max. Differential Pressure (in. Water)
BIF	M-C	42	23.9	0.5696	0.9986	75	231.4

** Million gallons per day*

[1] The coefficient of discharge was calculated using Equation (1) of this report and the β-ratio, venturi diameter, maximum flow and maximum differential pressure that was provided by the City of Chicago.

C. Flow Totalization

A SCADA system is used for flow totalization at the Cermak Station. First, the output from the pressure transmitters is sent to the SCADA system. The SCADA system samples the output every minute. The pressure transmitters' signal is divided by an integrator constant to convert it to a volume measurement. The sum of the 1,440, 1-minute readings is then used to determine the volume pumped through the system on a daily basis.

There are no backup chart recorders at the Cermak Station; however, if the SCADA system were to fail, readings could be obtained directly from the venturi manometers.

D. Calibration

An effective calibration procedure should calibrate both the primary flow meter and its secondary measurement device. First, the secondary measurement device, such as a pressure transmitter, should be calibrated to ensure it is reading correctly. Then, the flow meter itself should be calibrated to ensure it is functioning properly. The City does not perform any wet calibrations on the primary flow meters or their secondary measurement devices. Thus, all of the City's calibrations can be considered inferential in nature. The secondary measurement devices (i.e., the pressure transmitters, totalizers, etc.) are dry-calibrated once a year. If the City notices a problem or discrepancy, the instruments are checked; repaired, if necessary; and calibrated. If these tasks cannot be completed immediately, the unit is taken out-of-service until it can be repaired and calibrated. When a pressure transmitter or totalizer is calibrated, a full dry-calibration is performed using the Rochester DPG-700 pressure gauge. This pressure gauge provides a "calibrated" differential pressure that can be used to determine if the pressure transmitter or totalizer is reading properly. For the primary flow measurement devices, the City assumes the manufacturers' rating tables are correct.

After all the individual instruments have been dry-calibrated, the City performs an end-to-end calibration of the pumping station. When an end-to-end calibration is performed, the venturi-type meters are connected to manometers in order to obtain the pressure differentials. After an hour has passed, the volume measured by the manometer readings is compared to the volume measured by the totalizer. The City wants the difference between these two readings to be less than 2 percent for both the totalizer and instantaneous readings. This type of calibration is done to ensure that all the secondary measurement devices are working together properly.

During the calibration, the City takes readings both from Meriam manometers and from the calibrated flow signal over a period of time, typically at least 1 hour. The averages of both sets of data are compared and if a significant difference in readings is detected, the calibrators are sent out for recalibration and recertification. The last recalibration was April 2000. Per the manometer's specifications, the "NIST recognizes the U-type manometer as a primary standard due to its inherent accuracy and simplicity of operation." The manometers do not require calibration; therefore, comparing the values from the calibrated flow signal to the manometer's readings is a reasonable method of checking whether the calibrators should be recertified.

2. Uncertainty in Metering and Measurement Components

A. Venturi-Type Meters

According to manufacturer's specifications, the six BIF venturi tubes have an uncertainty of ± 0.75 percent of the actual rate for the top 90 percent of the flow range. Since the BIF meters have been in use for 40 to 65 years, a possibility of pitting and corrosion in the critical areas exists. The City has not inspected any of the meters at the Cermak Station. However, the meters at the Cermak Station are similar to the meter inspected by the City at the Southwest Station in that the throats of the meters are lined with bronze. Bronze is known for its ability to resist corrosion and formation of tubercles. Therefore, it is reasonable to assume that any significant corrosion or tuberculation would occur on the inlet piping only. This was the case when the meter was inspected at the Southwest Station. Since the water pumped through the Cermak Station and the Southwest Station have the same water chemistry and are treated in the same manner, it is assumed that if the venturis at the Cermak Station were inspected, the results would be similar to the results of the meter inspection at the Southwest Station. Therefore, based on the determinations made in the *Technical Review of Lake Michigan – Southwest Pumping Station*, any error due to corrosion and tuberculation is considered insignificant at the Cermak Station.

B. Pressure Taps

The pressure taps that are used to measure the pressure differential should be square with no roughness, burrs, or wire edges (Miller, 1996). If the pressure taps that are used do not meet these requirements, then a bias error would be introduced. It was not practical to inspect the pressure taps of these meters. The flow measurement devices were all constructed under a controlled manufacturing environment with very little opportunity for a pressure tap to be constructed poorly. Thus, we assumed that the manufacturer constructed the pressure taps correctly and that no additional error would be introduced due to the pressure taps.

C. Meter Installation

An appropriate minimum length of straight, circular pipe is required upstream of the flow meter to guarantee that the flow is fully established, the velocity profile entering the meter is not distorted, and that the meter will perform properly. The length of this approach section depends on number and types of bends and fittings located upstream of the meter.

At the Cermak Station, all six meters have the same upstream installation. At 6.7 feet upstream of each venturi is a single bend, and 6.8 feet upstream of the this bend is a valve. Table 2 indicates the minimum pipe lengths, as reported in ISO 5167-1:1991, required for both of these lengths of pipe given their upstream bends or fittings.

Table 2
Upstream Disturbances and Approximate Approach Lengths for the Various Venturi Meters at the Cermak Station

Pipe Reach	Upstream Fitting	Approach Length (feet)	Required Pipe Length for Zero Error (feet)	Required Pipe Length for 0.5-Percent Error (feet)
First upstream length	Single bend	6.7	8.8	1.8
Second upstream length	Valve	6.8	9.6*	6.1*

** These values are based on a beta ratio of 0.7, as recommended by ISO 5167.*

As shown in Table 2, neither the first or second upstream pipe length meet the minimum length requirements for zero error, but do meet the minimum length requirements for 0.5-percent error. Therefore, the error for the first upstream length of pipe would fall between 0 and 0.5 percent, as would the error for the second upstream length of pipe. To be conservative, an additional 1.0 percent error will be added to each meter (0.5 percent for the first upstream length and another 0.5 percent for the second upstream length). These inadequate pipe lengths will cause a distorted flow profile with little swirl at the venturi meter. No information was available for the bias direction for a distorted profile with little swirl. Miller reported that if a swirl was produced at the venturi meter, the flows tend to be under-reported Therefore, it is assumed that for this application the flows of a distorted flow profile without swirl will also be under-reported. Given this, the error will be -1.0 percent. This value is systematic in nature.

Inadequate straight piping downstream of the meter can also affect the accuracy of the meter. ISO 5167-1:1991 reference materials indicate that as long as the downstream length of straight piping exceeds four times the meter's throat diameter, no additional error is expected. Unlike for the upstream piping lengths, the ISO 5167-1:1991 reference does not indicate what length would be required to provide an uncertainty of 0.5 percent or any other uncertainty value. For the Cermak Station, all six meters have a throat diameter of 2.0 feet. Given this, 8.0 feet of straight piping is required to ensure no additional uncertainty due to the downstream piping installation. All six venturi meters only have 6.1 feet of straight piping before the meter's first downstream obstruction. Although, the downstream lengths do not meet the downstream piping requirement of four throat diameters, no error value is available in the ISO 5167-1:1991 reference. Therefore, although additional error may be present due to the downstream piping, it cannot be quantified and included in the actual uncertainty calculations.

D. Sampling

Additional uncertainty can also be introduced due to how the flow measurement data is recorded. If, for example, a quantity varies sinusoidally, but that quantity is only measured at the times when the quantity is at a peak, then the average measurements will be higher than the true average. This would introduce a bias into the system. On the other hand, if a quantity is measured or sampled frequently, then there will be very little error introduced due to the sampling. The flow rates at the Cermak Station are sampled every minute, and these 1-minute sample readings are used to determine the average daily volume pumped through the station. Unlike some of the other Chicago stations, there are no continuous chart recorders with which to compare the 1-minute readings at the Cermak Station. Thus, the Cermak Station data alone is not sufficient to determine whether the 1-minute readings are adequate.

The Mayfair, Central Park, Roseland, Springfield, and Western Pumping Stations all have average daily flows from chart-recorder data to compare to their instantaneous 1-hour SCADA readings. A randomized complete block design was performed for these five stations and their results are provided in Table 3.

Table 3
Results of the Random Complete Block Design Comparisons for the Mayfair, Central Park, Roseland, Springfield, and Western Pumping Stations

Station	Number Without Statistical Difference	Number With Statistical Difference
Central Park	2	4
Mayfair	25	3
Roseland	4	7
Springfield	5	1
Western	6	0

As shown in Table 2, the results are not consistent among the five stations tested. The results from the Mayfair, Springfield, and Western Stations indicate that in more cases than not there is no statistical difference between averages. The opposite is true for the Central Park and Roseland Stations. However, the statistical comparison was between the average daily volume from the chart recorder and average of 24 one-hour instantaneous SCADA readings, since 1-minute SCADA readings were not available. The actual daily flow volume that is recorded for LMO reporting is based on 1-minute readings. Therefore, a possibility still exists that the chart recorder's daily average flow and the SCADA's daily flow based on 1-minute readings could be statistically the same.

It is assumed that sampling frequency does not produce an additional source of error at the Cermak Station since the combined results from the Mayfair, Central Park, Roseland, Springfield, and Western Pumping Stations indicate that it is more likely than not that sampling frequency at the Cermak Station is adequate.

E. Pressure Differential Measurement

The pressure differentials of all six venturi-type meters are measured using Fisher Porter 50DPF100 pressure transmitters. Based on the manufacturer's performance specifications, these pressure transmitters have an accuracy of ± 0.25 percent of the span setting, a dead band of ± 0.05 percent of span setting and a temperature effect of ± 0.25 percent of span setting per 122 degrees F. It was assumed that the accuracy included linearity, hysteresis, and repeatablity since it typically does; however, the manufacturer was not able to confirm this assumption. Stability was not provided in the manufacturer specifications and thus assumed to not be a significant source of error. Based on conversations with the manufacturer, the span setting refers to the maximum span limit unless the costumer specifies for the meter to be set up for a lower span. It is assumed that the City did not request that the pressure transmitter have its span set to a lower value. Based on the specifications, an application with a calibrated span of 231.40 inches of water would require a high range transmitter. The maximum span limit of a high range pressure transmitter is 800 inches of water. The lake temperature varies from about 32 to 70 degrees F. This is approximately a 40-degree F temperature range. It is assumed that the specifications provided by the manufacturer are correct. Static pressure effect, supply voltage effect, and mounting position effects were assumed to be insignificant compared to the other uncertainties. The accuracy and temperature errors are considered to be systematic in nature with an unknown bias direction. The dead band error is random in nature.

F. Dry Calibration of Pressure Transmitters

The secondary measurements devices (i.e., pressure transmitters) are calibrated once a year using a Rochester DPG-700 module. Because the pressure transmitter is adjusted to the Rochester DPG-700 reading, all of the uncertainty components of the Rochester DPG-700 module will become a bias reported by the Fisher Porter pressure transducer. Since both pressure and current readings are taken from the Rochester DPG-700 module during calibration, two accuracy values apply. For the pressure reading, the accuracy is reported to be ± 0.05 percent of full scale plus one digit of display. Based on manufacturer's specification, the pressure display is shown to 0.002 pounds per square inch gage (PSIG), which is equal to 0.055 inches of water. The range of the Rochester DPG-700 module is 0 to 30 pounds per square inch ([psi] or 830.80 inches of water). The current reading's uncertainty is reported as ± 0.05 percent of full scale plus one digit of display. The upper range limit for the current is 50 mA. The current resolution is 0.005 mA. Note, however, that the two parameters of the calibrator (accuracy of the pressure module and accuracy of the current multi-meter) may not be totally uncorrelated since the pressure transmitter converts a physical measurement, the pressure, into an electrical signal, while the multi-meter loop current appears to be correlated to the pressure from the

pressure module. Although, these parameters may not be totally uncorrelated, it was not accounted for in this analysis. The direction of these biases, although unknown, will be in the same direction for all five meters in the Cermak Station.

G. SCADA System

In order for the SCADA system to determine the volume pumped through the Cermak Station, the analog signal from the pressure transmitter was converted to a digital signal using an analog input module. The manufacturer's specifications state that the analog-to-digital conversion is accurate to within ± 1.25 percent of full scale over operating range, and to within ± 0.7 percent of full scale at 25 degrees C. Since the water temperature varies from 32 to 70 degrees F, the uncertainty value of ± 1.25 percent of full scale over operating range will be used. In this case, the full scale was assumed to be the full scale of the venturi-type meter to which the pressure transmitter was connected. The error due to the analog-to-digital conversion is random in nature.

3. Sample Uncertainty Calculation for Effluent Meters

To demonstrate how the uncertainty of the measured volume pumped through the Cermak Station was estimated, a series of sample calculations follows. The method used to estimate the uncertainty is similar to that described in the *Technical Review of Lake Michigan Water Withdrawal by the City of Evanston*. Please refer to this document for background on the statistical handling of measurement uncertainty. The City provided the hourly logs of three, 2-week periods. These time periods were the first 14 days in September 1998, and February and May 1999. There were some periods of missing data due to the SCADA system being down. These missing periods were estimated based on data trends. In reviewing the data, it was apparent that some hourly values were not constant over the entire hour. For example, if during an hour block, the meter was pumping 60 MGD but only pumping half an hour, the average flow for that hour would be one-half the pumped flow, or 30 MGD. Using the 30 MGD would incorrectly cause the metering uncertainty to be greater because 30 MGD is significantly less than the optimum flow range of the metering system. Therefore, any data points that appeared not to be constant flow over the entire hour were changed to zero. It was assumed that the Cermak Station's pumpages over these time periods were representative of the typical pumpages. The uncertainty of the hourly and daily readings can be obtained using these assumptions. The uncertainties can be reported as the standard deviation of the measurements (expressed by the variable *s*) or in relative terms (expressed by the variable *CV*, which is the standard deviation of the measurements divided by the mean of the measurements).

A. Uncertainty of Hourly Flow Measurements

(1) Systematic (Bias) Error

The majority of the error components are systematic in nature. These systematic errors include errors from the venturi, inadequate approach length, the pressure transmitters (with the exception of the dead band uncertainty which is random in nature), and the calibration equipment. To determine the uncertainty of the hourly flow measurements, all uncertainties need to be in terms of percent accuracy of actual rate. The errors associated with the venturi and the inadequate approach lengths are already expressed in these terms. However, the accuracy associated with the pressure transmitters and span, setting or full scale (FS).

The standard equation for the flow through a venturi-type meter is:

$$Q = \frac{C_d A_t}{\sqrt{1-\beta^4}} \sqrt{2g\Delta h}$$ *Equation (1)*

Where:

Q	=	Flow rate
C_d	=	Discharge coefficient
A_t	=	Area of the throat section
β	=	Ratio of the throat diameter to the approach section diameter (also referred to as the beta-ratio)
g	=	Acceleration due to gravity
Δh	=	Pressure differential across the meter

Based on manufacturer information, the C_d value for all six venturi meters is 0.9986.

Note that the model assumes that the discharge coefficient, throat area, and throat to approach diameter ratio (i.e., β-ratio) introduce no errors to the discharge calculations. That is, the differential pressure head of the venturi meter is the only source of error or uncertainty.

At the Cermak Station, each venturi meter is dedicated to a single pump. For illustration of the uncertainty calculations, we will be examining the pumping characteristics for September 1, 1998. On this day, no pumps were used until 7:00 a.m., at which time pump No. 2 was routed through its respective venturi. At 9:00 a.m. pump Nos. 2 and 3 were routed through their respective venturis for the rest of the day. For the sake of illustration, the following sample hourly uncertainty calculations will be for the 9:00 a.m. reading on September 1.

The throat area, A_t, for the venturi-meter No.2 is:

$$A_t = \frac{\Pi(23.92)^2}{4} = 449.4in^2 = 3.121ft^2 \qquad \textit{Equation (2)}$$

Likewise, the throat area of venturi No.3 is also 3.121 square feet. During the 9:00 a.m. reading on September 1, 58 and 45 MGD were flowing through venturi Nos. 2 and 3, respectively. The pressure differential for venturi No. 2 is calculated below using Equation (1), and the β-ratio of 0.5696 from Table 1.

$$\Delta h = \left[\frac{Q\sqrt{1-\beta^4}}{C_d A_t \sqrt{2g}}\right]^2 = 12\left[\frac{1.547(58MGD)\sqrt{1-(0.5696)^4}}{(0.9986)(3.121ft^2)\sqrt{2(32.16ft/s^2)}}\right]^2 = 138.36in. \qquad \textit{Equation (3)}$$

The values of 12 and 1.547 that appear in *Equation (3)* are unit conversion factors to convert feet to inches and MGD to cubic feet per second (cfs), respectively. A summary of flow characteristics for the 9:00 a.m. reading of the two venturi-type meters on September 1 appears in Table 4.

Table 4
Summary of Flow Characteristics for the
9:00 a.m. Reading on September 1, 1998

Venturi No.	Throat Area (sq. ft.)	Flow Rate (MGD)	Pressure Differential (in. Water)
2	3.121	58	138.36
3	3.121	45	83.25

The pressure differentials of all the venturi-type meters are measured using Fisher Porter pressure transmitters. Based on the manufacturer's performance specifications, these pressure transmitters have an accuracy of ± 0.25 percent of the span setting, a temperature effect of ± 0.25 percent of span setting per 122 degrees F. The span setting of the transmitters is 800 inches of water. Thus, the uncertainty in the pressure differential measurement due to accuracy would be ± 2.00 inches of water (i.e., ± 0.0025 times 800) for venturi meter No. 2. The uncertainty in the flow rate due to the accuracy of the pressure transmitter for venturi meter No.2 would then be:

$$CV_{Qa} = \frac{Xs_p}{\Delta h} = \frac{(0.5)(\pm 2.00in)}{138.36in} = \pm 0.723\% \qquad \textit{Equation (4)}$$

Where:

CV_{Qa} = Uncertainty in the flow rate due to the accuracy of the pressure transmitter.

s_p = Uncertainty in the pressure transmitter (due to transmitter accuracy in this case).

X = Sensitivity coefficient equal to 0.5 for the pressure transducer as the flow is directly proportional to the square root of the pressure differential in Equation (1), and Δh is the pressure differential.

See *Technical Review of Lake Michigan Water Withdrawals by the City of Evanston* for additional information on the sensitivity coefficient. The uncertainty in the flow rate due to the transmitter's accuracy and temperature affect for meter Nos. 2 and 3 are shown in Table 5.

Table 5
Uncertainty From Pressure Transmitters and Calibration Equipment for the 9:00 a.m. Reading on September 1, 1998, for Venturi Nos. 2 and 3

Venturi No.	Instrument	Uncertainty Source	CV for Δh or ΔmA	FS or Span Setting	Uncertainty for Δh or ΔmA	CV for Flow (%)
2	Fisher Porter	Pressure transmitter	0.25-percent span setting	800 in. water	2.000 in. water	0.723
2	Fisher Porter	Pressure transmitter	0.25-percent span setting/ 122°F	800 in. water	0.656 in. water	0.237
2	DPG-700	Calibrator	0.05-percent FS + 1 digit*	830.8 in. water	0.470 in. water	0.170
2	DPG-700	Calibrator	0.05-percent FS + 1 digit**	50 mA	0.030 mA	0.183
3	Fisher Porter	Pressure transmitter	0.25-percent span setting	800 in. water	2.000 in. water	1.201
3	Fisher Porter	Pressure transmitter	0.25-percent span setting/ 122°F	800 in. water	0.656 in. water	0.394
3	DPG-700	Calibrator	0.05 percent FS + 1 digit*	830.8 in. water	0.470 in. water	0.283
3	DPG-700	Calibrator	0.05 percent FS + 1 digit**	50 mA	0.030 mA	0.221

* *One digit is equal to 0.055 in. Water*

** *One digit is equal to 0.005 mA*

The pressure transmitters are calibrated using a Rochester DPG-700 calibrator. Since both pressure and current readings are taken from the calibrator, two independent accuracy values apply. For the pressure reading, the accuracy is reported to be ± 0.05 percent of full scale, plus one digit of display. Based on manufacturer's specification, the pressure display is shown to 0.002 PSIG, which is equal to 0.055 inches of water. The range of the Rochester DPG-700 module is 0 to 30 psi (or 830.80 inches of water). Thus, the uncertainty in the pressure component of the calibrator would be ± .470 inches of water (i.e., ± 0.0005 times 830.80, plus 0.055) for venturi meter No. 2. The uncertainty in the flow rate due to pressure component of the calibrator for venturi meter No. 2 would then be:

$$CV_{Qa} = \frac{Xs_p}{\Delta h} = \frac{(0.5)(\pm 0.470in)}{138.36in} = \pm 0.170\% \qquad \textit{Equation (5)}$$

The current reading's uncertainty is reported as ± 0.05 percent of full scale, plus one digit of display. The upper range limit for the current is 50 mA. The current resolution is 0.005 mA. Thus, the uncertainty in the current component of the calibrator would be ± 0.030 mA (i.e., ± 0.0005 times 50, plus 0.005) for venturi meter No. 2. The uncertainty in the flow rate due to current component of the calibrator for venturi meter No. 2 would then be:

$$CV_{Qa} = \frac{Xs_i}{\Delta i} = \frac{(1.0)(\pm 0.030mA)}{16.4mA} = \pm 0.183\% \qquad \textit{Equation (6)}$$

Where:

s_i = An uncertainty due to the current reading for the calibrator pressure differential

Δi = Current differential

The current differential is known to be linear to the flow rate with 4 mA corresponding to zero flow, and 20 mA corresponding to flow meter capacity, which is 75 MGD for meter Nos. 2 and 3. Using this relationship, for the 9:00 a.m. reading on September 1, the corresponding currents would be 16.4 and 13.6 mA for meter Nos. 2 and 3, respectively. Note that for this calculation, the sensitivity coefficient, *X*, is 1.0 since the flow rate is directly proportional to the current (i.e. a linear relationship). This process was repeated for meter No. 3's DPG-700 pressure gauge accuracy. A summary of these estimates appears in Table 5.

In this study, the bias uncertainty estimates will be broken down into three categories:

- Bias uncertainty with a known bias direction.
- Bias uncertainty with an unknown bias, but known to be in the same direction for each meter.
- Bias uncertainty with an unknown bias direction.

Explanation of this breakdown was detailed in *Technical Review of Lake Michigan Water Withdrawals by the City of Evanston*. Table 6 lists the type of bias uncertainty for each of the bias estimates for the 9:00 a.m. readings for venturi meter Nos. 2 and 3. Additionally, Table 6 also provides the absolute bias estimates for the 9:00 a.m. readings taken from venturi meter Nos. 2 and 3 based on the following equation:

$$s_b = CV_{flow} \cdot Q_{\substack{first \\ hour}} = (0.00723)(58\,MGD) = 0.419\,MGD \qquad \textit{Equation (7)}$$

Where:

S_b	=	Standard deviation (or absolute uncertainty) of the flow measurement due to the respective systematic uncertainty estimate
CV_{flow}	=	Relative uncertainty in the flow rate
$Q_{first\ hour}$	=	Flow for the 9:00 a.m. reading

Table 6
Absolute Bias Estimates for the 9:00 a.m. Readings Taken on September 1, 1998

Venturi No.	Bias Component	Type of Bias	CV_b(%)	S_b (MGD)
2	Venturi	Direction unknown	± 0.750	± 0.435
	Approach lengths	Direction known	- 1.000	- 0.580
	Pressure transmitters			
	– *Accuracy*	Direction unknown	± 0.723	± 0.419
	– *Temperature*	Direction unknown	± 0.237	± 0.137
	Calibrator			
	– *Pressure*	Direction unknown, but in same direction for all meters	± 0.170	± 0.099
	– *Current*		± 0.183	± 0.106
3	Venturi	Direction unknown	± 0.750	± 0.338
	Approach lengths	Direction known	- 1.000	- 0.450
	Pressure transmitters			
	– *Accuracy*	Direction unknown	± 1.201	± 0.540
	– *Temperature*	Direction unknown	± 0.394	± 0.177
	Calibrator			
	– *Pressure*	Direction unknown, but in same direction for all meters	± 0.283	± 0.127
	– *Current*		± 0.221	± 0.099

The systematic uncertainty estimates for meter Nos. 2 and 3 can be combined as shown below in *Equation (8)* to determine the overall hourly systematic uncertainty for September 1998. To determine the uncertainty of the sum of the two measurements, the individual uncertainty estimates should be combined on the basis of absolute uncertainty (i.e., standard deviations) and not relative uncertainty (i.e., coefficient of variation).

$$S_b = \sum_{i=1}^{l_1}\sum_{j=1}^{m} S_{b_{ij\ direction\ known}} \pm \left[\sum_{i=1}^{l_2}\sum_{j=1}^{m} S^2_{b_{ij\ direction\ unknown}} + \sum_{i=1}^{l_3}\left(\sum_{j=1}^{m} S_{b_{ij\ unknown\ but\ in\ same\ direction}}\right)^2\right]^{\frac{1}{2}}$$

Equation (8)

Where:

S_b	=	Combined uncertainty or standard deviation of the flow measurement.
$S_{bij\ direction\ known}$	=	Absolute bias uncertainty of known direction for measurement *i,j*.
$S_{bij\ unknown\ but\ in\ same\ direction}$	=	Absolute bias uncertainty of unknown direction but known to occur in the same direction for each meter for measurement *i,j*.
$S_{bij\ direction\ unknown}$	=	Absolute bias uncertainty of unknown direction for measurement *i,j*.
m	=	The number of meters.
I_1, I_2, I_3	=	The number of uncertainty components in $S_{bij\ direction\ known}$, $S_{bij\ direction\ unknown}$, and $S_{bij\ unknown\ but\ in\ same\ direction}$, respectively.

For the 9:00 a.m. reading, using *Equation (8)*, the overall absolute bias uncertainty, S_b, was found to be -1.03 ± 0.96 MGD, which corresponds to a relative uncertainty, CV_b, of -1.00 ± 0.93 percent (i.e., -1.03 ± 0.96 MGD divided by the total flow rate of 103 MGD). This process was repeated for each of the 24-hour readings taken during the day. The results are provided in Table 7.

Table 7
Systematic, Random, and Overall Uncertainty Estimates for Flow Measurements Made on September 1, 1998

Hour	Total Flow (MGD)	CV_b (%)	S_b (MGD)	CV_r (%)	S_r (MGD)	Overall CV (%)
1	0	0	0	0	0	0
2	0	0	0	0	0	0
3	0	0	0	0	0	0
4	0	0	0	0	0	0
5	0	0	0	0	0	0
6	0	0	0	0	0	0
7	64	-1.00 ± 1.00	-0.640 ± 0.640	± 1.47	± 0.941	-1.00 ± 1.78

Table 7
Systematic, Random, and Overall Uncertainty Estimates for Flow Measurements Made on September 1, 1998

Hour	Total Flow (MGD)	CV_b (%)	S_b (MGD)	CV_r (%)	S_r (MGD)	Overall CV (%)
8	65	-1.00 ± 0.99	-0.650 ± 0.642	± 1.45	± 0.940	-1.00 ± 1.75
9	103	-1.00 ± 0.93	-1.030 ± 0.956	± 1.29	± 1.333	-1.00 ± 1.59
10	105	-1.00 ± 0.90	-1.050 ± 0.947	± 1.27	± 1.333	-1.00 ± 1.56
11	103	-1.00 ± 0.93	-1.030 ± 0.956	± 1.29	± 1.333	-1.00 ± 1.59
12	103	-1.00 ± 0.93	-1.030 ± 0.956	± 1.29	± 1.333	-1.00 ± 1.59
13	103	-1.00 ± 0.93	-1.030 ± 0.956	± 1.29	± 1.333	-1.00 ± 1.59
14	103	-1.00 ± 0.93	-1.030 ± 0.956	± 1.29	± 1.333	-1.00 ± 1.59
15	103	-1.00 ± 0.93	-1.030 ± 0.956	± 1.29	± 1.333	-1.00 ± 1.59
16	101	-1.00 ± 0.95	-1.010 ± 0.963	± 1.32	± 1.333	-1.00 ± 1.63
17	102	-1.00 ± 0.94	-1.020 ± 0.957	± 1.31	± 1.333	-1.00 ± 1.61
18	102	-1.00 ± 0.94	-1.020 ± 0.957	± 1.31	± 1.333	-1.00 ± 1.61
19	103	-1.00 ± 0.93	-1.030 ± 0.956	± 1.29	± 1.333	-1.00 ± 1.59
20	101	-1.00 ± 0.95	-1.010 ± 0.963	± 1.32	± 1.333	-1.00 ± 1.63
21	98	-1.00 ± 1.00	-0.980 ± 0.977	± 1.36	± 1.334	-1.00 ± 1.69
22	62	-1.00 ± 1.03	-0.620 ± 0.638	± 1.52	± 0.941	-1.00 ± 1.83
23	61	-1.00 ± 1.04	-0.610 ± 0.637	± 1.54	± 0.941	-1.00 ± 1.86
24	0	0	0	0	0	0

(2) Random Error

Only the SCADA uncertainty and pressure transmitter's dead band were identified as being random in nature. The manufacturer states that the SCADA's analog-to-digital conversion can take place with an uncertainty of ± 1.25 percent of full scale. As mentioned earlier, it was assumed that full scale refers to full scale of the venturi-type meter. Thus, for venturi No. 2 with a capacity of 75 MGD, the absolute random uncertainty due to the SCADA system would be ± 0.938 MGD (± 0.0125 times 75 MGD). Hence, the relative uncertainty estimate for the SCADA system would be ± 1.62 percent (i.e., ± 0.938 MGD divided by 58 MGD). Similarly, the absolute random uncertainty for venturi No. 3, which also has a capacity of 75 MGD, would be ± 0.938 MGD (i.e., ± 0.0125 times 75 MGD), and the relative random uncertainty would be ±2.08 percent (i.e., ± 0.938 MGD divided by 45 MGD).

The Fischer Porter transmitters have a dead band of ± 0.05 percent of the span setting. The uncertainty due to the dead band of the pressure transmitters can be calculated using the methodology shown in *Equation (3)*. The uncertainty in the pressure differential measurement due to dead band would be ± 0.40 inches of water (i.e., ± 0.0005 times 800) for both venturi Nos. 2 and 3. Applying *Equation (4)*, the uncertainty in the flow rate due to the dead band of the pressure transmitter would then be ±0.145 percent or ±0.084 MGD and ±0.240 percent or ± 0.108 MGD for venturi meter Nos. 2 and 3, respectively.

The overall absolute random uncertainty can be determined by combining the absolute random uncertainties due to the SCADA system and pressure transmitter's dead band for venturi Nos. 2 and 3 using the root-mean-square method. The method results in an overall random uncertainty of ± 1.332 MGD or a relative random uncertainty, CV_r, ± 1.29 percent (i.e., ±1.332 MGD divided by 103 MGD). The results are provided in Table 7.

(3) Combining Systematic and Random Errors

The systematic and random errors can be combined using the following methodology:

$$S_b = \sum_{i=1}^{l_1}\sum_{j=1}^{m} S_{b_{ij\,\text{direction known}}} \pm \left[\sum_{i=1}^{l_2}\sum_{j=1}^{m} S^2_{b_{ij\,\text{direction unknown}}} + \sum_{i=1}^{l_3}\left(\sum_{j=1}^{m} S_{b_{ij\,\text{unknown but in same direction}}}\right)^2 + \sum_{i=1}^{l_4}\sum_{j=1}^{m} S^2_{r_{ij}}\right]^{\frac{1}{2}} \qquad \textit{Equation (9)}$$

Where:

S_{rij}	=	Absolute random uncertainty.
l_4	=	The number of uncertainty components in S_{rij}.

Using *Equation (9)*, the overall uncertainty of the sum of the two flow measurements for the 9:00 a.m. reading on September 1 is -1.030 ± 1.640 MGD, or -1.00 ± 1.59 percent.

This process is repeated for each of the 24-hour readings taken during the day and the results can be seen in Table 7. The average uncertainty, *CV*, of an hourly flow measurement performed on September 1 was -1.00 ± 1.65 percent. This implies that the 95 percent confidence interval, *CI*, for an hourly flow measurement would be -1.00 ± 3.50 percent (-1.00 ± [1.65 times 2.120]). Over the entire study period, the average uncertainty of an hourly flow measurement, *CV*, was found to be -1 .00 ± 1.84 percent. The average 95 percent confidence interval of an hourly flow measurement, *CI*, would then be equal to -1.00 ± 3.61 percent (-1.00 ±[1.84 times 1.960]).

B. Uncertainty of Daily Volume Measurements

An estimate of the uncertainty of the daily volume pumped through the station can be obtained from the 24 hourly flow measurements. The volume pumped through the Cermak Station is the average of the 24 hourly flow measurements times 1 day. For September 1, the average volume pumped through the station is 65.9 million gallons (MG). The uncertainty of the systematic daily volume measurements can be determined using the following equation:

$$CV_{Vb} = CV_{bV_{\substack{direction \\ known}}} + \frac{\Delta t}{m_v}\left(\sum_{k=1}^{n} Q_k^2 CV^2_{b_{k_{\substack{direction \\ unknown}}}} + \left(\sum_{k=1}^{n} Q_k CV_{b_{k_{\substack{unknown \\ but\ in\ same \\ direction}}}}}\right)^2\right)^{\frac{1}{2}} \qquad \textit{Equation (10)}$$

Where:

CV_{Vb}	=	Relative uncertainty of the total bias volume measurement.
$CV_{bV\ direction\ known}$	=	Bias with known direction of the total volume measurement.
$CV_{bk\ direction\ unknown}$	=	Bias error in individual flow measurement *ik* where the bias direction is unknown.
$CV_{bk\ unknown\ but\ in\ same\ direction}$	=	Bias error in individual flow measurement *k* where the bias direction is unknown but in the same direction for all meters.
Δt	=	Time increment.
Q_k	=	Value of flow measurement.
m_V	=	Sum of all *n* volume measurements

In this case, the uncertainty of the measured volume can be expressed in relative terms because the terms Q_k and m_V take into account the magnitude of the individual measurements.

Using *Equation (10)*, the relative systematic error, CV_{Vb}, was -1.00 ± 0.36 percent for September 1.

The average random uncertainty component for the daily volume can be obtained from the following expression:

$$CV_{Vr} = \pm \frac{\Delta t}{m_v}\left(\sum_{k=1}^{n} Q_k^2 CV_{rk}^2\right)^{\frac{1}{2}}$$

Equation (11)

Where:

CV_{rk}	=	Random error in individual flow measurement *k*
CV_{Vr}	=	Relative uncertainty of the volume measurement

Using *Equation (11)*, the relative random uncertainty of the daily volume, CV_{vr}, for September 1998, is ± 0.33 percent.

The overall uncertainty of the daily volume can then be found by combining the systematic and random uncertainty components in the following manner:

$$CV_V = CV_{bV_{\substack{direction\\known}}} + \frac{\Delta t}{m_v}\left(\sum_{k=1}^{n} Q_k^2 CV_{b_{k_{\substack{direction\\unknown}}}}^2 + \left(\sum_{k=1}^{n} Q_k CV_{b_{k_{\substack{unknown\\but\ in\ same\\direction}}}}\right)^2 + \sum_{k=1}^{n} Q_k^2 CV_{r_k}^2\right)^{\frac{1}{2}}$$

Equation (12)

For the date in question, the overall uncertainty of the daily volume, CV_V, was found to be -1.00 ± 0.49 percent, or -0.659 ± 0.323 MG (-1.00 ± 0.49 percent times 65.9 MG). The 95-percent confidence interval on the daily volume, CI_v, would then be -1.00 ± 1.04 percent (-1.00 ± [0.0.49 times 2.120]). Note that the 95-percent confidence interval for the daily volume (-1.00 ± 1.04 percent) is much narrower than the 95-percent confidence interval for the hourly flow measurement (-1.00 ± 3.50 percent). This is because the random errors and systematic errors with unknown direction associated with an hourly flow measurement are statistically canceled when they are summed over a day's time. The average random, systematic, and overall uncertainty for each day in each 2-week study period were found using the above method. A summary of the daily volume uncertainties for the September 1998 study period appears in Table 8.

Table 8
Estimated Uncertainties for Daily Volumes in September 1998, Study Period

Date	CV_{Vb} (%)	CV_{Vr} (%)	CV_V (%)	CI_V (%)
September 1	-1.00 ± 0.36	± 0.33	-1.00 ± 0.49	-1.00 ± 1.04
September 2	-1.00 ± 0.32	± 0.35	-1.00 ± 0.47	-1.00 ± 1.01
September 3	-1.00 ± 0.32	± 0.35	-1.00 ± 0.48	-1.00 ± 1.01
September 4	-1.00 ± 0.33	± 0.37	-1.00 ± 0.49	-1.00 ± 1.05
September 5	-1.00 ± 0.37	± 0.34	-1.00 ± 0.51	-1.00 ± 1.08
September 6	-1.00 ± 0.34	± 0.35	-1.00 ± 0.49	-1.00 ± 1.05
September 7	-1.00 ± 0.35	± 0.40	-1.00 ± 0.54	-1.00 ± 1.16
September 8	-1.00 ± 0.33	± 0.37	-1.00 ± 0.49	-1.00 ± 1.05
September 9	-1.00 ± 0.32	± 0.36	-1.00 ± 0.48	-1.00 ± 1.03
September 10	-1.00 ± 0.33	± 0.36	-1.00 ± 0.49	-1.00 ± 1.04
September 11	-1.00 ± 0.31	± 0.34	-1.00 ± 0.46	-1.00 ± 0.98
September 12	-1.00 ± 0.32	± 0.35	-1.00 ± 0.48	-1.00 ± 1.01
September 13	-1.00 ± 0.32	± 0.36	-1.00 ± 0.48	-1.00 ± 1.02
September 14	-1.00 ± 0.34	± 0.38	-1.00 ± 0.51	-1.00 ± 1.09

C. Uncertainty of Annual Volume Measurements

The uncertainty in the annual volume pumped through the station can be estimated using the estimated uncertainty in daily volume measurements. As mentioned earlier, the study period consisted of 2-week periods in September 1998, and February and May of 1999. In total, there were 42 days in the study period. Over this time period, the average systematic uncertainty for a daily volume measurement, CV_b, was determined to be -1.00 ± 0.35 percent (± 0.26 percent from unknown biases and ± 0.24 percent from unknown biases known to be in the same direction for all meters) and the average random uncertainty for a daily volume measurement, CV_r, was estimated to be ± 0.40 percent. The average uncertainty in daily volume would then be -1.00 ± 0.53 percent and the average 95-percent confidence interval for the daily volume would be -1.00 ± 1.14 percent.

The uncertainty in the annual volume pumped through the Cermak Station, CV_V can be determined as follows:

$$CV_V = CV_{b_{\substack{direction \\ known}}} \pm \left(\frac{CV^2_{b_{\substack{direction \\ unknown}}}}{n} + CV^2_{b_{\substack{unknown \\ but\ in\ same \\ direction}}} + \frac{CV_r^2}{n} \right)^{\frac{1}{2}}$$

$$= -1.00 \pm \left(\frac{0.26^2}{365} + 0.24^2 + \frac{0.40^2}{365} \right)^{\frac{1}{2}} = -1.00 \pm 0.24\%$$

Equation (13)

The 95-percent confidence interval of the annual volume, CI_v, would then simply be -1.00 ± 0.47 percent (-1.00 ± [0.24 times 1.960]). The 95-percent confidence interval for the annual volume (-1.00 ± 0.47 percent) is less than the average 95-percent confidence interval for the daily volume (-1.00 ± 1.04 percent). Most of the random error and unknown bias error associated with the daily volume measurement is statistically canceled when determining the uncertainty of the annual volume.

4. Quality Assurance

If the water accounting system is moved to the lakefront, there is a concern that if one of the direct diverter's flow measurement systems goes down, that there would be no way to measure the withdrawals from the lake. Thus, it is desirable that the direct diverters have a backup measurement system and, if possible, some other independent check on the measurements to ensure that the measurements are reasonable and accurate.

There are many backup systems at the Cermak Station. If a problem is detected in a particular venturi meter or its corresponding pressure transmitter, that venturi meter and its pump can be shutdown and a different venturi and pump can be used in its place for metering and distribution.

The SCADA system used to totalize the flow consists of several elements. A schematic of the SCADA system showing the flow and storage of data is provided in Appendix B. The signal from each pressure transmitter is sent to a computer (CP2), located at the plant, where the flow data is displayed, processed and temporally stored. This computer is only capable of storing 3 days worth of data. Therefore, the control center computer system (CP3) located at the Jardine water treatment plant reads the data from the CP2 and is responsible for storing and maintaining the flow records. Note that if CP2 were to fail, the data would not be communicated to CP3. The CP3 central control computer system consists of two computers with automatic failover such that if one computer fails, the other one takes over automatically. Both of these computers store data from the pumping station so none of the data should be lost in the event that either computer fails. The data stored on CP3 is also backed up on tape.

The data is transferred from the CP2 computer at the plant to the CP3 computer at Jardine over a dedicated communication line (i.e., a telephone line). This communication line does not have a backup. However, since the CP2 at the station can store up to 3 days of data, no data will be lost if the line is repaired within 3 days.

If the SCADA system were to fail, there are no backup recorders at the station. Readings could, however, be obtained manually from the venturi's manometer. This data would then be manually inputted in the SCADA system once the problems with the SCADA system were corrected.

Unlike the stream-operated pumping stations, there are no chart recorders at the Cermak Station. Thus, the Cermak Station does not have this additional level of backup that the steam-operated stations do. Also, it is desirable to have an independent check on the flow measurement system employed by the Cermak Station. The steam-operated stations can use the chart recorders as an independent check; however, the Cermak Station does not have chart recorders, and, thus, there is no easily identifiable independent check on the flow measurement system.

5. Summary of Inadequacies in the Current Metering Systems

For the most part, the current metering system provided a reasonable level of accuracy and has acceptable quality assurance. There are a few areas of the metering system that appear to be deficient.

- The actual venturi meters are not calibrated. Rather, the City assumes that the manufacturer's rating curves are correct. Calibration of the venturi meters would confirm or deny this assumption.

- No backup data recorders exists. Therefore, should the SCADA system fail, all flow data at the Cermak Station is lost. Further, without two data sources, any additional uncertainty due to the sampling accuracy cannot be determined.

- The overall accuracy in estimating the water supply pumpage is dependent upon many measurement and analysis functions. The documented technical review and much previous work were focused on the accuracy of the pumpage measurements in hardware (i.e., meters, calibrator, pressure transmitter, etc.) and software (SCADA, etc.). This analyses does not take into account procedural errors such as inconsistent data in water supply pumpage as a result of the reporting mechanism.

6. Recommendations for Long-Term QA/QC and Improvements to Metering

Recommendations for long-term QA/QC and improvements to metering are as follows:

- Calibration of the venturi meters to determine if the manufacturer's rating curves are valid.
- Occasional inspection and measurement, if physically possible, of the inlet and throat of the venturi meters to determine any possible presence and effects of corrosion and tuberculation on the meter's accuracy.
- Installation of a backup recording device.
- Routine auditing of various water withdrawal reports, as part of the long-term QA/QC, as a means of accounting for procedural errors.

7. Conclusions

Some of the important conclusions are summarized below:

- For operational purposes, the City can determine the hourly flow measurement reading to within -1.00 ± 3.61 percent at the Cermak Station. This value takes into account the random and systematic uncertainty associated with the venturi meters, pressure transmitters, calibration equipment, and recording system.

- On an annual basis, the total volume pumped through the station can be determined to within -1.00 ± 0.47 percent. The 95-confidence interval for the annual volume is narrower than the 95-percent confidence interval for the hourly flow measurements made at the Cermak Station because the random and unknown bias errors associated with the measurement are statistically canceled when the measurements are summed over a year's time.

- With the exception of the SCADA system, all the metering system has redundancy or backup for quality assurance. There is no backup data recorder at this time.

- There is no independent check of the flow measurement system that can be used as an indicator when there is a problem within the system.

References

American Society of Mechanical Engineers, *Fluid Meters: Their Theory and Application.* ASME, New York, 6th ed., 1971.

Ametek Power Instruments, "Rochester DPG-700 Precision Digital Pressure Gauge," http://www.rochester. com/Products/RIS/dgp-700.htm.

Analog Input Module PPX:505-6108A Electrical Specification [for the SCADA system], n.d.

Cheremisinoff, Nicholas P. and Paul N. Cheremisinoff. *Flow Measurements for Engineers and Scientists.* Marcel Dekker, Inc., New York, 1888.

City of Chicago. Correspondence between Mr. R. W. Pence of the City of Chicago and David Clemmans of Energy Associates Inc., regarding the "BIF Flow Metering Equipment," August 18, 1977.

Fischer-Porter, *Electronic Differential Pressure Transmitter–Type 50DPF100 Specification*, n.d.

Hutton, Stanley P, *The Prediction of Venturi-Meter Coefficients and Their Variation with Roughness and Age.*

International Organization for Standardization, *Measurements of Fluid Flows by Means of Pressure Differential Devices*, ISO, Switzerland, 1991.

Mead & Hunt, Inc., *Technical Review of Lake Michigan Water Withdrawals by the City of Evanston–Draft*, July 2002.

Mead & Hunt, Inc., *Technical Review of Lake Michigan Withdrawals – Southwest Pumping Station*, July 2002.

Meriam Instrument, *General Installation, Operation and Maintenance Instructions for Meriam Manometers*, April 1992.

Miller, Richard W., *Flow Measurement Engineering Handbook*, McGraw-Hill, New York, 1996.

Spitzer, David W., *Industrial Flow Measurement.* Instrument Society of America, North Carolina, 1990.

Final Report

Technical Review of Lake Michigan Withdrawals Chicago Avenue Pumping Station

City of Chicago

Prepared for:

U.S. Army Corps of Engineers – Chicago District
Chicago, Illinois

Prepared by:

MEAD & HUNT

June 2003

Table of Contents

Page

Executive Summary . . . . . E-i

1. General Description 1
   A. Summary of Operation 1
   B. Flow Measurement 1
   C. Flow Totalization 2
   D. Calibration 2

2. Uncertainty in Metering and Measurement Components 4
   A. Venturi-Type Meters 4
   B. Pressure Taps 4
   C. Meter Installation 5
   D. Sampling 7
   E. Pressure Differential Measurement 8
   F. Dry Calibration of Pressure Transmitters 9
   G. SCADA System 10

3. Sample Uncertainty Calculation for Effluent Meters 11
   A. Uncertainty of Hourly Flow Measurements 11
      (1) Systematic (Bias) Error 11
      (2) Random Error 17
      (3) Combining Systematic and Random Errors 18
   B. Uncertainty of Daily Volume Measurements 20
   C. Uncertainty of Annual Volume Measurements 22

4. Quality Assurance 24

5. Summary of Inadequacies in the Current Metering Systems 25

6. Recommendations for Long-Term QA/QC and Improvements to Metering 26

7. Conclusions 27

References 28

List of Appendices

Appendix

A Schematic of the Chicago Avenue Station

B Schematic of SCADA Station

List of Tables

Table		Page
1	Flow Measurement Devices Used at the Chicago Avenue Station	2
2	Upstream Disturbances and Approximate Approach Lengths for the Various Venturi Meters at the Chicago Avenue Station	5
3	Assumed Additional Error Due to Inadequate Upstream Installation for the Chicago Avenue Station	6
4	Required and Actual Downstream Piping Lengths at the Chicago Avenue Station	7
5	Results of the Random Complete Block Design Comparisons for the Mayfair, Central Park, Roseland, Springfield, and Western Pumping Stations	8
6	Uncertainty From the Pressure Transmitter and Calibration Equipment for the First Hourly Reading on September 1, 1998, for Venturi No. 6	15
7	Absolute Bias Estimates for the First Hourly Readings Taken on September 1, 1998	16
8	Systematic, Random, and Overall Uncertainty Estimates for Hourly Flow Measurements Made on September 1, 1998	19
9	Estimated Uncertainties for Daily Volumes in September 1998 Study Period	21

Executive Summary

Currently, diversion of water from Lake Michigan for the state of Illinois is measured at the Chicago Sanitary and Ship Canal at Romeoville. The Great Lakes Mediation Memorandum of Understanding established a lakefront diversion accounting system and specified a 3-year transition period to assess the technical acceptability of moving the diversion measurement system to the lakefront. A lakefront diversion accounting system requires metering of all domestic water withdrawals from Lake Michigan and the direct diversions into the Chicago Sanitary and Ship Canal system at the Chicago River, the Calumet River, and the North Shore Channel at Wilmette. During the 3-year transition period, the U.S. Army Corps of Engineers (USACE) has been tasked to initiate a technical review of the accuracy of the reported domestic withdrawals from Lake Michigan.

The USACE retained Mead & Hunt, Inc., to evaluate the accuracy of domestic withdrawals from Lake Michigan. A total of 12 pumping stations in the city of Chicago (City) and six suburban pumping stations will be evaluated. These evaluations include revisions to the investigations conducted on the City's Mayfair and Thomas Jefferson Stations and the city of Evanston's Station by the Illinois District of the U.S. Geological Survey. This report presents a summary of the flow measurement techniques at the Chicago Avenue Station as employed by the City, as well as estimates of the uncertainty of daily and annual volume measurements. Presently, the Chicago Avenue Station consists of six electrically operated pumps and six venturi-type meters.

To obtain an estimate of the uncertainty of an individual flow measurement, we examined the manufacturer's accuracy specifications for both the primary flow measurement devices (i.e., the venturi-type meters) and secondary measurement devices (i.e., the pressure transmitters). The Chicago Avenue Station's calibration technique, sampling technique, and device installation were also examined. All of the sources of uncertainty identified from this analysis were then classified as either random or systematic in nature. Using this information and the data logs provided by the City, we obtained an estimate of the uncertainty of an individual flow measurement. From this information, an estimate of the uncertainty of the daily and annual volume withdrawn from the lake can be obtained using standard statistical techniques.

Some of the important conclusions are summarized below:

- For operational purposes, the City can determine the hourly flow measurement reading to within -0.72 ± 3.57percent at the Chicago Avenue Station. This value takes into account the random and systematic uncertainty associated with the venturi meters, pressure transmitters, calibration equipment, and recording system.

- On an annual basis, the total volume pumped through the station can be determined to within -0.72 ± 0.80 percent. The 95-percent confidence interval for the annual volume is narrower than the 95-percent confidence interval for the hourly flow measurements made at the Chicago Avenue Station because the random and unknown bias errors associated with the measurement are statistically canceled when the measurements are summed over a year's time.

- With the exception of the SCADA system, all the metering system has redundancy or backup for quality assurance. There is no backup data recorder at this time.

- There is no independent check of the flow measurement system that can be used as an indicator when there is a problem within the system.

Technical Review of
Lake Michigan Withdrawals
Chicago Avenue Pumping Station
City of Chicago

1. General Description

A. Summary of Operation

The Chicago Avenue Pumping Station (Chicago Avenue Station) is an electrically operated plant consisting of six pumps and six venturi-type meters. Each pump's flow is dedicated to a specific venturi-type meter. The pressure differentials on the meters are measured using Foxboro pressure transmitters. The output signals from the pressure transmitters are sent to the Supervisory Control and Data Acquisition (SCADA) system. The SCADA system samples the pressure transmitter signals every minute. These 1-minute readings are then used to determine the average daily volume pumped through any given venturi meter. No backup recording system exists at the Chicago Avenue Station. A schematic of the Chicago Avenue Station is provided in Appendix A.

B. Flow Measurement

The Chicago Avenue Station uses six venturi-type meters to measure the flow pumped through the station. Meter Nos. 1, 2, 3, and 4 are BIF venturi tubes that were installed between 1920 and 1921. The other two venturi-type meters (meter Nos. 5 and 6) are Simplex tubes that were installed in 1957. Specifications of the six venturi-type meters are shown in Table 1.[1]

[1] The coefficient of discharge was calculated using Equation (1) of this report and the beta-ratio, venturi diameter, maximum flow and maximum differential pressure that was provided by the City of Chicago.

Table 1
Flow Measurement Devices Used at the Chicago Avenue Station

Venturi No.	Manu-facturer	Model No.	Approach Pipe Diameter (in.)	Throat Diameter (in.)	β-Ratio	Coefficient of Discharge	Max. Flow Rate (MGD)*	Max. Differential Pressure (in. Water)
1	BIF	M-DF	36	22.0	0.6111	0.9887	68	260.93
2	BIF	M-DF	36	22.0	0.6111	0.9887	68	260.93
3	BIF	M-DF	36	22.0	0.6111	0.9914	68	259.54
4	BIF	M-DF	36	22.0	0.6111	0.9914	68	259.54
5	Simplex	VT	36	27.3	0.7593	0.9862	65	78.00
6	Simplex	VT	36	27.3	0.7593	0.9862	65	78.00

** Million gallons per day*

C. Flow Totalization

A SCADA system is used for flow totalization at the Chicago Avenue Station. First, the output from the pressure transmitters is sent to the SCADA system. The SCADA system samples the output every minute. The pressure transmitters' signal is divided by an integrator constant to convert it to a volume measurement. The sum of the 1,440, 1-minute readings is then used to determine the volume pumped through the system daily. There are no backup chart recorders at the Chicago Avenue Station; however, if the SCADA system were to fail, readings could be obtained directly from the venturi manometers.

D. Calibration

An effective calibration procedure should calibrate both the primary flow meter and its secondary measurement device. First, the secondary measurement device, such as a pressure transmitter, should be calibrated to ensure it is reading correctly. Then, the flow meter itself should be calibrated to ensure it is functioning properly. The City does not perform any wet calibrations on the primary flow meters or their secondary measurement devices. Thus, all of the City's calibrations can be considered inferential in nature. The secondary measurement devices (i.e., the pressure transmitters, totalizers, etc.) are dry-calibrated once a year. If the City notices a problem or discrepancy, the instruments are checked; repaired, if necessary; and calibrated. If these tasks cannot be completed immediately, the unit is taken out-of-service until it can be repaired and calibrated. When a pressure transmitter or totalizer is calibrated, a full dry-calibration is performed using the AMETEK Modcal II pressure gauge. This pressure gauge provides a "calibrated" differential pressure that can be used to determine if the pressure transmitter or totalizer is reading properly. For the primary flow measurement devices, the City assumes the manufacturers' rating tables are correct.

After all the individual instruments have been dry-calibrated, the City performs an end-to-end calibration of the pumping station. When an end-to-end calibration is performed, the venturi-type meters are connected to manometers in order to obtain the pressure differentials. After an hour has passed, the volume measured by the manometer readings is compared to the volume measured by the totalizer. The City wants the difference between these two readings to be less than 2 percent for both the totalizer and instantaneous readings. This type of calibration is done to ensure that all the secondary measurement devices are working together properly.

During the calibration, the City takes readings both from the Meriam manometers and from the calibrated flow signal over a period of time, typically at least 1 hour. The averages of both sets of data are compared and if a significant difference in readings is detected, the calibrators are sent out for re-calibration and re-certification. The last re-calibration was April 2000. Per the manometer's specifications, the "NIST recognizes the U-type Manometer as a primary standard due to its inherent accuracy and simplicity of operation." The manometers do not require calibration, therefore comparing the values from the calibrated flow signal to the manometer's readings is a reasonable method of checking whether the calibrators should be re-certified.

2. Uncertainty in Metering and Measurement Components

A. Venturi-Type Meters

Based on manufacturer specifications, the BIF venturis have an accuracy of ± 0.75 percent actual flow over the top 90 percent of the flow range and the Simplex venturis have an accuracy of ± 0.50 percent of actual flow over the top 95 percent of the flow range. These venturi uncertainties are bias in nature with an unknown direction. Since the meters have been in use for 45 to 80 years, a possibility of pitting, tuberculation, and corrosion in the critical areas exists. In March 1977 correspondence between the Simplex manufacturer and the City, the manufacturer stated that given the age of the meters, "it is entirely possible that there may be tuberculation in the venturis." They further stated that without an examination of the meters, it is impossible to predict whether a meter's condition may affect its accuracy.

The City has not inspected any of the meters at the Chicago Avenue Station. However, the meters at the Chicago Avenue Station are similar to the meter inspected by the City at the Southwest Station in that the throats of the meters are lined with bronze. Bronze is known for its ability to resist corrosion and formation of tubercles. Therefore, it is reasonable to assume that any significant corrosion or tuberculation would occur on the inlet piping only. This was the case when the meter was inspected at the Southwest Station. Since the water pumped through the Chicago Avenue Station and the Southwest Station has the same water chemistry and is treated in the same manner, it is assumed that if the venturis at the Chicago Avenue Station were inspected, the results would be similar to the results of the meter inspection at the Southwest Station. Therefore, based on the determinations made in the *Technical Review of Lake Michigan–Southwest Pumping Station*, any error due to corrosion and tuberculation is considered insignificant at the Chicago Avenue Station.

B. Pressure Taps

The pressure taps that are used to measure the pressure differential should be square with no roughness, burrs, or wire edges (Miller, 1996). If the pressure taps that are used do not meet these requirements, then a bias error would be introduced. It was not practical to inspect the pressure taps of these meters. The flow measurement devices were all constructed under a controlled manufacturing environment with very little opportunity for a pressure tap to be constructed poorly. Thus, we assumed that the manufacturer constructed the pressure taps correctly and that no additional error would be introduced due to the pressure taps.

C. Meter Installation

An appropriate length of straight, circular pipe is required upstream of the flow meter to guarantee that the velocity profile entering the meter is not distorted and that the meter will perform properly. The length of this approach section depends on the number and types of bends and fittings located upstream of the meter.

Table 2 lists the approximate approach length and upstream fittings for the meters located at the Chicago Avenue Station. The "Required Approach Length for Zero Error" and the "Required Approach Length for 0.5-percent Error" values reported in Table 2 were taken from ISO 5167-1:1991.

Table 2
Upstream Disturbances and
Approximate Approach Lengths for the
Various Venturi Meters at the Chicago Avenue Station

Venturi	First Upstream Fitting	First Upstream Approach Length (feet)	Required Pipe Length for Zero Error (feet)	Required Pipe Length for ± 0.50% Error (feet)	Second Upstream Fitting	Second Upstream Approach (length, feet)	Required Pipe Length for Zero Error (feet)	Required Pipe Length for ± 0.5% Error (feet)
1	Valve	5.5	13.5	7.5	Valve	6.3	8.3	5.3
2	Valve	5.5	13.5	7.5	Valve	6.3	8.3	5.3
3	Valve	20.7	13.5	7.5	Valve	6.5	8.3	5.3
4	Valve	12.4	13.5	7.5	Valve	6.2	6.0	3.0
5	Valve	27.0	16.5	10.5	Single bend	4.3	6.0	3.0
6	Single bend	5.0	13.5	9.0	Valve	4.9	8.3	5.3

As shown in Table 2, the upstream pipe length is less than the required pipe length for 0.5-percent uncertainty for venturi Nos. 1 and 2 and the second upstream pipe length falls between the required pipe length for zero error and 0.5-percent error. For venturi Nos. 3 and 5, the first upstream pipe length exceeds the minimum required pipe length for zero error, but the second upstream pipe length falls between the minimum values for zero error and 5-percent error. In the case of venturi No. 4, the first upstream pipe length falls between the minimum pipe length required for zero error and 0.5-percent error, while the second upstream pipe length exceeds the length requirements for zero error. The first and second upstream lengths for Venturi No. 6 do not meet the minimum requirements for 0.5 percent of error.

ISO 5167-1:1991 reference materials only provide lengths for zero error and 0.5-percent error. Therefore, although in some instances described above the actual pipe lengths are significantly less than the required minimum length for a 0.5-percent error, the exact error value is unknown. Consequently, although the error may be greater than 0.5 percent, this value will be assumed in the analysis. Similarly, some pipe lengths fall between the minimum requirements for zero error and 0.5 percent. The actual error value in this situation is also unknown. Therefore, to be conservative, a 0.5-percent error will be assumed in these instances. Given these assumptions, the following uncertainties due to the upstream piping installation will be applied to each meter as shown in Table 3.

These inadequate pipe lengths will cause a distorted flow profile with little swirl at the venturi meter. No information was available for the bias direction for a distorted profile with little swirl. Miller reported that if a swirl was produced at the venturi meter, the flows tend to be under-reported Therefore, it is assumed that for this application the flows of a distorted flow profile without swirl will also be under-reported. Given this, the errors reported in Table 3 have a negative bias. This value is systematic in nature.

Table 3
Assumed Additional Error Due to Inadequate Upstream Installation for the Chicago Avenue Station

Venturi	Meets Required Pipe Length for Zero Error?	Meets Required Pipe Length for ± 0.5% Error?	Meets Required Pipe Length for Zero Error?	Meets Required Pipe Length for ± 0.5% Error?	Assumed Additional Error Due to Inadequate Upstream Installation
1	No	No	No	Yes	-1.0
2	No	No	No	Yes	-1.0
3	Yes	Yes	No	Yes	-0.5
4	No	Yes	Yes	Yes	-0.5
5	Yes	Yes	No	Yes	-0.5
6	No	No	No	No	-1.0

Inadequate straight piping downstream of the meter can also affect the meter's accuracy. ISO 5167-1:1991 reference materials indicate that as long as the downstream length of straight piping exceeds four times the meter's throat diameter, no additional error is expected. Unlike for the upstream piping lengths, the ISO 5167-1:1991 reference does not indicate what length would be required to provide an uncertainty of 0.5 percent or any other uncertainty value. For the Chicago Avenue Station, venturi meter Nos. 1 through 4 have a throat diameter of 1.83 feet. Given this, 7.32 feet of straight piping is required to ensure no additional uncertainty due to the downstream piping installation. Venturi meter Nos. 5 and 6 have a throat diameter of 2.28 feet, which would require 9.12 feet of straight piping to ensure no

additional uncertainty due to the downstream piping installation. Table 4 provides these required downstream pipe lengths to those that are actually installed.

Table 4
Required and Actual Downstream Piping Lengths at the Chicago Avenue Station

Venturi	Required Downstream Length (feet)	Actual Downstream Length (feet)	Meets Required Downstream Pipe Length
1	7.3	4.5	No
2	7.3	4.5	No
3	7.3	18.5	Yes
4	7.3	12.6	Yes
5	9.0	17.6	Yes
6	9.0	9.3	Yes

Although, downstream lengths of meters Nos. 1 and 2 do not meet the downstream piping requirement of 4-throat diameters, no error value is available in the ISO 5167-1:1991 reference. Therefore, although additional error may be present due to the downstream piping, it cannot be quantified and included in the actual uncertainty calculations.

D. Sampling

Additional uncertainty can also be introduced due to how the flow measurement data is recorded. If, for example, a quantity varies sinusoidally, but that quantity is only measured at the times when the quantity is at a peak, then the average measurements will be higher than the true average. This would introduce a bias into the system. On the other hand, if a quantity is measured or sampled frequently, then there will be very little error introduced due to the sampling. The flow rates at the Chicago Avenue Station are sampled every minute, and these 1-minute sample readings are used to determine the average daily volume pumped through the station. Unlike some of the other Chicago stations, there are no continuous chart recorders with which to compare the 1-minute readings at the Chicago Avenue Station. Thus, the Chicago Avenue Station data alone is not sufficient to determine whether the 1-minute readings are adequate.

The Mayfair, Central Park, Roseland, Springfield, and Western Pumping Stations all have average daily flows from chart recorder data to compare to their instantaneous 1-hour SCADA readings. A randomized complete block design was performed on the data for these five stations and their results are provided in Table 5.

Table 5
Results of the Random Complete Block Design Comparisons for the Mayfair, Central Park, Roseland, Springfield and Western Pumping Stations.

Station	Number without Statistical Difference	Number with Statistical Difference
Central Park	2	4
Mayfair	25	3
Roseland	4	7
Springfield	5	1
Western	6	0

As shown in Table 5, the results are not consistent among the five stations tested. The results from the Mayfair, Springfield, and Western Stations indicate that in more cases than not there is no statistical difference between averages. The opposite is true for the Central Park and Roseland Stations. However, the statistical comparison was between the average daily volume from the chart recorder and average of 24 one-hour instantaneous SCADA readings, since 1-minute SCADA readings were not available. The actual daily flow volume that is recorded for LMO reporting is based on 1-minute readings. Therefore, a possibility still exists that the chart recorder's daily average flow and the SCADA's daily flow based on 1-minute readings could be statistically the same.

It is assumed that sampling frequency does not produce an additional source of error at the Chicago Avenue Station since the combined results from the Mayfair, Central Park, Roseland, Springfield, and Western Pumping Stations indicate that it is more likely than not that sampling frequency at the Chicago Avenue Station is adequate.

E. Pressure Differential Measurement

The pressure differentials of all six venturi-type meters are measured using Foxboro 823 DP pressure transmitters. In conversations with technical support at Foxboro, it was determined that the significant uncertainty components include accuracy, stability, and temperature effect. According to Foxboro, these pressure transmitters have an accuracy of ± 0.2 percent of the calibrated span, a stability of ± 0.1 percent reference span, and a temperature effect of ± 0.125 percent of reference span per 100 degrees F. The lake temperature varies from about 32 to 70 degrees F. This is approximately a 40-degree F temperature range. The calibrated span is 260.9, 259.5, and 78.0 inches of water for meter Nos 1 and 2, Nos. 3and 4, and Nos. 5 and 6, respectively. Given this information, it is assumed that meter Nos. 1 through 4 have a high-range sensor and meter Nos. 5 and 6 have a medium-range sensor. Based on this assumption and information provided by Foxboro, the reference span for meter Nos. 1 through 4 would be 500 inches of water and for meter Nos. 5 and 6 would be 100 inches of water. It is assumed

that the specifications provided by the manufacturer are correct. The combination of these errors is considered to be systematic in nature. The direction of this bias is unknown.

F. Dry Calibration of Pressure Transmitters

The secondary measurement devices (i.e., pressure transmitters) are calibrated once a year using a AMETEK Modcal II calibrator. Because the pressure transmitter is adjusted to the AMETEK Modcal II's reading, all of the uncertainty components of the AMETEK Modcal II will become a bias reported by the Foxboro pressure transmitter. There are three uncertainty components to the AMETEK Modcal II – two for the pressure module and one from the multimeter. The accuracy of the AMETEK pressure module is reported to be ± 0.05 percent of URL[2] from 10 percent to 100 percent of URL. Most of the time, the AMETEK module will be operated in this range so this value was used for all the readings. The stability of the pressure module is reported as ± 0.05 percent of URL per 6 months.[3] To set a maximum error limit, the entire uncertainty due to stability was used. In the case of the Chicago Avenue calibrations, the URL pressure is 30 psi 830.7 inches of water). The accuracy of the multimeter portion of the AMETEK module is reported to be ± 0.05 percent of reading plus one count from 10 percent to 100 percent of full scale. It is assumed that one count is equal to one resolution, or 0.01mA. The AMETEK module is temperature-compensated over the range of 32°F to 113°F, so there is no additional uncertainty introduced due to temperature effects. Note, however, that the three parameters of the calibrator (accuracy and stability of the pressure module and accuracy of the current multimeter) may not be totally uncorrelated since the pressure transmitter converts a physical measurement, the pressure, into an electrical signal while the multimeter loop current appears to be correlated to the pressure from the pressure module. Although these parameters may not be totally uncorrelated, it was not accounted for in this analysis. All three accuracies for the AMETEK Calibrator are systematic in nature with an unknown bias direction. However, since this calibrator is used to calibrate several meters, this bias is the same direction for all the meters.

---

[2] Note that the City of Chicago's AMETEK Modcal II specifications report an accuracy of ± 0.05 percent for the pressure module, whereas the City of Evanston's AMETEK Modcal II specifications report an accuracy of ± 0.05 percent *plus one digit of display* for the pressure module. Given this inconsistency, it will be assumed that each city's pressure module specifications are accurate for their respective AMETEK Modcal II calibrator.

[3] The 6 months refers to the AMETEK Modcal II's stability, not the pressure transmitter's. Therefore, the time period between using the Modcal II to calibrate the pressure transmitter doesn't matter as long as the Modcall II is sent in for calibration and maintenance before it exceeds the ± 0.05 percent of URL stability value. We assume that the Modcal II is properly maintained and calibrated.

G. SCADA System

In order for the SCADA system to determine the volume pumped through the Chicago Avenue Station, the analog signal from the pressure transmitter was converted to a digital signal using an analog input module. The manufacturer's specifications state that the analog-to-digital conversion is accurate to within ± 1.25 percent of full scale over operating range, and to within ± 0.7 percent of full scale at 25 degrees C. Since the water temperature varies from 32 to 70 degrees F, the uncertainty value of ± 1.25 percent of full scale over operating range will be used. In this case, the full scale was assumed to be the full scale of the venturi-type meter to which the pressure transmitter was connected. The error due to the analog to digital conversion is random in nature.

3. Sample Uncertainty Calculation for Effluent Meters

To demonstrate how the uncertainty of the measured volume pumped through the Chicago Avenue Station was estimated, a series of sample calculations follows. The method used to estimate the uncertainty is similar to that described in the *Technical Review of Lake Michigan Water Withdrawal by the City of Evanston*. Please refer to this document for background on the statistical handling of measurement uncertainty. The City provided the hourly logs of three, 2-week periods. These time periods were the first 14 days in September 1998, and February and May 1999. There were some periods of missing data due to the SCADA system being down. These missing periods were estimated based on data trends. In reviewing the data, it was apparent that some hourly values were not constant over the entire hour. For example, if during an hour block, the meter was pumping 60 MGD but only pumping half an hour, the average flow for that hour would be one-half the pumped flow, or 30 MGD. Using the 30 MGD would incorrectly cause the metering uncertainty to be greater because 30 MGD is significantly less than the optimum flow range of the metering system. Therefore, any data points that appeared not to be constant flow over the entire hour were changed to zero. Doing so removes these values from being considered in the analysis, which prevents this data from skewing the analysis by producing incorrect uncertainty values. It was assumed that the Chicago Avenue Station's pumpages over these time periods were representative of the typical pumpages. The uncertainty of the hourly and daily readings can be obtained using these assumptions. The uncertainties can be reported as standard deviation of measurement (expressed by the variable *s*) or in relative terms (expressed by the variable *CV*, which is the standard deviation divided by the mean of the measurements).

A. Uncertainty of Hourly Flow Measurements

(1) Systematic (Bias) Error

The majority of the error components are systematic in nature. These systematic errors include error from the venturi, inadequate approach length, the pressure transmitters, and the calibration equipment. To determine the uncertainty of the hourly flow measurements, all uncertainties need to be in terms of percent accuracy of actual rate. The errors associated with the venturi and the inadequate approach lengths are already expressed in these terms. However, the accuracy associated with the pressure transmitters and calibration equipment are in terms of percent accuracy per calibrated span, reference span, full scale (FS), or of actual amperage reading.

The standard equation for the flow through a venturi-type meter is:

$$Q = \frac{C_d A_t}{\sqrt{1-\beta^4}} \sqrt{2g\Delta h} \qquad \textit{Equation (1)}$$

Where:

Q	=	Flow rate
C_d	=	Discharge coefficient
A_t	=	Area of the throat section
β	=	Ratio of the throat diameter to the approach section diameter (also referred to as the beta-ratio)
g	=	Acceleration due to gravity
Δh	=	Pressure differential across the meter

Based on manufacturer information, the C_d values for the venturi meters range from 0.9862 to 0.9914, depending on the particular meter.

Note that the model assumes that the discharge coefficient, throat area, and throat to approach diameter ratio (i.e. β-ratio) introduce no errors to the discharge calculations. That is, the differential pressure head of the venturi meter is the only source of error or uncertainty.

At the Chicago Avenue Station, each venturi meter is dedicated to a single pump. For illustration of the uncertainty calculations, we will be examining the pumping characteristics for September 1, 1998. On this day, only pump No. 6 was routed through its respective venturi meter.

The throat area, A_t, for the venturi-meter No. 6 is:

$$A_t = \frac{\Pi(27.3)^2}{4} = 586.6in^2 = 4.074\,ft^2 \qquad \textit{Equation (2)}$$

For the first hour on September 1, 1998, 52 MGD was flowing through venturi No. 6. The pressure differential for venturi No. 6 is calculated below using Equation (1), and the β-ratio of 0.7593 from Table 1.

$$\Delta h = \left[\frac{Q\sqrt{1-\beta^4}}{C_d A_t \sqrt{2g}}\right]^2 = 12\left[\frac{1.547(52\,MGD)\sqrt{1-(0.7593)^4}}{(0.9862)(4.074\,ft^2)\sqrt{2(32.16\,ft/s^2)}}\right]^2 = 49.93in. \qquad \textit{Equation (3)}$$

MEAD & HUNT

The values of 12 and 1.547 that appear in *Equation (3)* are unit conversion factors to convert feet to inches and MGD to cfs, respectively.

The pressure differentials of all six venturi-type meters are measured using Foxboro 823 DP pressure transmitters. In conversations with technical support at Foxboro, it was determined that the significant uncertainty components include accuracy, stability, and temperature effect. According to Foxboro, these pressure transmitters have an accuracy of ± 0.2 percent of the calibrated span, a stability of ± 0.1-percent reference span and a temperature effect of ± 0.125 percent of reference span per 100 degrees F. For meter No. 6, the calibrated span is 78.0 inches of water and the reference span is 100 inches of water. Thus, the uncertainty in the pressure differential measurement due to accuracy would be ± 0.156 inches of water (i.e., ± 0.002 times 78.0) for venturi meter No. 6. The uncertainty in the flow rate due to the accuracy of the pressure transmitter for venturi meter No. 6 would then be:

$$CV_{Qa} = \frac{Xs_p}{\Delta h} = \frac{(0.5)(\pm 0.156in)}{49.93in} = \pm 0.156\% \qquad \textit{Equation (4)}$$

Where:

CV_{Qa} = The uncertainty in the flow rate due to the accuracy of the pressure transmitter.

s_p = An uncertainty in the pressure transmitter (due to transmitter accuracy in this case).

X = The sensitivity coefficient equal to 0.5 for the pressure transmitter as flow is directly proportional to the square root of the pressure differential.

Δh = The pressure differential.

See *Technical Review of Lake Michigan Water Withdrawals by the City of Evanston* for additional information on the sensitivity coefficient, *X*. The uncertainty in the flow rate due to the transmitter's accuracy, stability, and temperature affect for meter No. 6 is shown in Table 6.

The pressure transmitters are calibrated once a year using a AMETEK Modcal II calibrator. There are three uncertainty components to the AMETEK Modcal II, two for the pressure module and one from the multimeter. The accuracy of the AMETEK pressure module is reported to be ± 0.05 percent of URL from 10 percent to 100 percent of URL. The stability of the pressure module is reported as ± 0.05 percent of URL per 6 months. In the case of the Chicago Avenue calibrations, the URL pressure is 30 psi (830.7 inches of water). The accuracy of the multimeter portion of the AMETEK module is reported to be ± 0.05 percent of reading plus one count from 10 percent to 100 percent of full scale. It is assumed that one count is equal to one resolution, or 0.01mA.

The uncertainty due to the accuracy of the pressure module would be ± 0.415 inches of water (i.e., ± 0.0005 times 830.7) for venturi meter No. 6 during the first hour on September 1, 1998. The uncertainty in the flow rate due to pressure component of the calibrator for venturi meter No. 6 would then be:

$$CV_{Qa} = \frac{Xs_p}{\Delta h} = \frac{(0.5)(\pm 0.415in)}{49.93in} = \pm 0.416\% \qquad \textit{Equation (5)}$$

The accuracy of the multimeter portion of the AMETEK module is reported to be ± 0.05 percent of reading plus one count from 10 percent to 100 percent of full scale. It is assumed that one count is equal to one resolution, or 0.01mA. For the first hourly flow reading on September 1, 1998, the flow rate was 52 MGD, which is equal to 16.80 mA given that flow and amperage are known to have a linear relationship with 4 mA equal to zero flow and 20 mA equal to the meter's capacity (65 MGD for Meter No. 6). Thus, the uncertainty in the current component of the calibrator would be ± 0.0184 mA (i.e., ± 0.0005 times 16.80, plus 0.01) for venturi meter No. 6. The uncertainty in the flow rate due to current component of the calibrator for venturi meter No. 6 would then be:

$$CV_{Qa} = \frac{Xs_i}{\Delta i} = \frac{(1.0)(\pm 0.0184mA)}{16.8mA} = \pm 0.110\% \qquad \textit{Equation (6)}$$

Where:

s_i = Uncertainty due to the current reading for the calibrator pressure differential.

I = Current differential.

Note that for this calculation, the sensitivity coefficient, X, is 1.0 since the flow rate is directly proportional to the current (i.e., a linear relationship). A summary of the uncertainty estimates for the calibration equipment appears in Table 6.

Table No. 6
Uncertainty From the Pressure Transmitter and Calibration Equipment for the First Hourly Reading on September 1, 1998, for Venturi No. 6

Venturi No.	Instrument	Uncertainty Source	CV for H. or ΔmA	Reference, FS Calibrated Span or Actual Reading	Uncertainty for H. or ΔmA	CV for Flow (%)
6	Foxboro	Pressure transmitter	0.2% of calib. span	78.0 in. water	0.156 in. water	0.156
6	Foxboro	Pressure transmitter	0.1% of reference span	100 in. water	0.100 in. water	0.100
6	Foxboro	Pressure transmitter	0.125% reference span/100°F	100 in. water	0.050 in. water	0.050
6	AMETEK	Calibrator (pressure accuracy)	0.05% FS	830.7 in. water	0.415 in. water	0.416
6	AMETEK	Calibrator (pressure stability)	0.05% FS	830.7 in. water	0.415 in. water	0.416
6	AMETEK	Calibrator (amperage)	0.05% reading + 1 count*	16.80 mA	0.0184 mA	0.110

* *One count is assumed equal to 0.01 mA*

In this study, the bias uncertainty estimates will be broken down into three categories:

- Bias uncertainty with a known bias direction.
- Bias uncertainty with an unknown bias, but known to be in the same direction for each meter.
- Bias uncertainty with an unknown bias direction.

Explanation of this breakdown was detailed in the *Technical Review of Lake Michigan Water Withdrawal by the City of Evanston.* Table 7 lists the type of bias uncertainty for each of the bias estimates for the first hourly readings for venturi meter No. 6. Additionally, Table 7 also provides

the absolute bias estimates for the first hourly readings taken from venturi meter No. 6 based on the following equation:

$$s_b = CV_{flow} \cdot Q_{\substack{first \\ hour}} = (0.00156)(52\,MGD) = 0.081\,MGD \qquad \textit{Equation (7)}$$

Where:

S_b	=	Standard deviation (or absolute uncertainty) of the flow measurement due to the respective systematic uncertainty estimate
CV_{flow}	=	Relative uncertainty in the flow rate
$Q_{first\ hour}$	=	Flow for the first hour

Table 7
Absolute Bias Estimates for the First Hourly Readings Taken on September 1, 1998

Venturi No.	Bias Component	Type of Bias	CV_b(%)	S_b (MGD)
6	Venturi	Direction unknown	± 0.50	± 0.260
	Approach lengths	Direction known	- 1.00	-0.520
	Pressure transmitters			
	– *Accuracy*	Direction unknown	± 0.156	± 0.081
	– *Stability*	Direction unknown	± 0.100	± 0.052
	– *Temperature*	Direction unknown	± 0.050	± 0.026
	Calibrator			
	– *Pressure Accuracy*	Direction unknown,	± 0.416	± 0.216
	–*Pressure Stability*	but in same	± 0.416	± 0.216
	– *Current Accuracy*	direction for all meters	± 0.110	± 0.057

The systematic uncertainty estimates for meter No. 6 can be combined as shown below in *Equation (8)* to determine the overall hourly systematic uncertainty for September 1, 1998. The various uncertainty components should be combined on the basis of absolute uncertainty (i.e., standard deviations) and not relative uncertainty (i.e., coefficient of variation).

$$S_b = \sum_{i=1}^{l_1}\sum_{j=1}^{m} S_{b_{ij\,\substack{direction \\ known}}} \pm \left[\sum_{i=1}^{l_2}\sum_{j=1}^{m} S^2_{b_{ij\,\substack{direction \\ unknown}}} + \sum_{i=1}^{l_3}\left(\sum_{j=1}^{m} S_{b_{ij\,\substack{unknown \\ but\ in\ same \\ direction}}}\right)^2\right]^{\frac{1}{2}} \qquad \textit{Equation (8)}^4$$

Where:

S_b	=	Combined uncertainty or standard deviation of the flow measurement.
$S_{bij\ direction\ known}$	=	Absolute bias uncertainty of known direction for measurement *i,j*.
$S_{bij\ unknown\ but\ in\ same\ direction}$	=	Absolute bias uncertainty of unknown direction but known to occur in the same direction for each meter for measurement *i,j*.
$S_{bij\ direction\ unknown}$	=	Absolute bias uncertainty of unknown direction for measurement *i,j*.
m	=	The number of meters.
I_1, I_2, I_3	=	The number of uncertainty components in $S_{bij\ direction\ known}$, $S_{bij\ direction\ unknown}$, and $S_{bij\ unknown\ but\ in\ same\ direction}$, respectively.

For the first hour, using *Equation (8)*, the overall absolute bias uncertainty, S_b, was found to be -0.520 ± 0.418 MGD, which corresponds to a relative uncertainty, CV_b, of -1.00 ± 0.80 percent (i.e.,-0.520 ± 0.418 MGD divided by the total flow rate of 52 MGD).

This process was repeated for each of the 24-hour readings taken during the day. The results are provided in Table 8 (table combining random uncertainty and bias).

(2) Random Error

Only the SCADA uncertainty was identified as being random in nature. The manufacturer states that the analog-to-digital conversion can take place with an uncertainty of ± 1.25 percent of full scale. As mentioned earlier, it was assumed that full scale refers to full scale of the venturi-type meter. Thus, for venturi No. 6 with a capacity of ± 65 MGD, the absolute random uncertainty due to the SCADA system would be ± 0.813 MGD (± 0.0125 times 65 MGD). Hence, the relative uncertainty estimate for the SCADA system would be ± 1.56 percent (i.e., ± 0.813 MGD divided by 52 MGD).

Since only one meter is in use, the overall absolute random uncertainty would also be ± 0.813 MGD and the overall relative random uncertainty, CV_r, would be ± 1.56 percent. If more than one meter was in use, the overall absolute random uncertainty could be determined by combining the absolute random uncertainties due to the SCADA system for each meter in use using the root-mean-square method. This process was repeated for each of the 24-hour readings taken during the day. The results are provided in Table 8 (table combining random and bias).

(3) Combining Systematic and Random Errors

The systematic and random errors can be combined using the following methodology:

$$S_b = \sum_{i=1}^{l_1}\sum_{j=1}^{m} S_{b_{ij\,\text{direction known}}} \pm \left[\sum_{i=1}^{l_2}\sum_{j=1}^{m} S^2_{b_{ij\,\text{direction unknown}}} + \sum_{i=1}^{l_3}\left(\sum_{j=1}^{m} S_{b_{ij\,\text{unknown but in same direction}}}\right)^2 + \sum_{i=1}^{l_4}\sum_{j=1}^{m} S^2_{r_{ij}}\right]^{\frac{1}{2}} \qquad \textit{Equation (9)}$$

Where:

S_{rij}	=	Absolute random uncertainty
l_4	=	The number of uncertainty components in S_{rij}.

Using *Equation (9)*, the overall uncertainty of the sum of the two flow measurements made in the first hour of September 1 is -0.520 ± 0.914 MGD, or -1.00 ± 1.76 percent.

This process is repeated for each of the 24-hour readings taken during the day and the results can be seen in Table 8. The average uncertainty, *CV*, of an hourly flow measurement performed on September 1 was -1.00 ± 1.78 percent. This implies that the 95-percent confidence interval, *CI*, for an hourly flow measurement would be -1.00 ± 3.68 percent (-1.00 ±[1.78 times 2.069]). Over the entire study period, the average uncertainty of an hourly flow measurement, *CV*, was found to be -0.72 ± 1.82 percent. The average 95-percent confidence interval of an hourly flow measurement, *CI*, would then be equal to -0.72 ± 3.57 percent (-0.72 ± [1.82 times 1.960]).

Table 8
Systematic, Random, and Overall Uncertainty Estimates for Meter No. 6's Hourly Flow Measurements Made on September 1, 1998

Hour	Total Flow (MGD)	CV_b (%)	S_b (MGD)	CV_r (%)	S_r (MGD)	Overall CV (%)
1	52	-1.00 ± 0.80	-0.520 ± 0.418	± 1.56	± 0.813	-1.00 ± 1.76
2	52	-1.00 ± 0.80	-0.520 ± 0.418	± 1.56	± 0.813	-1.00 ± 1.76
3	51	-1.00 ± 0.82	-0.510 ± 0.419	± 1.59	± 0.813	-1.00 ± 1.79
4	51	-1.00 ± 0.82	-0.510 ± 0.419	± 1.59	± 0.813	-1.00 ± 1.79
5	52	-1.00 ± 0.80	-0.520 ± 0.418	± 1.56	± 0.813	-1.00 ± 1.76
6	55	-1.00 ± 0.75	-0.550 ± 0.414	± 1.48	± 0.813	-1.00 ± 1.66
7	55	-1.00 ± 0.75	-0.550 ± 0.414	± 1.48	± 0.813	-1.00 ± 1.66
8	55	-1.00 ± 0.75	-0.550 ± 0.414	± 1.48	± 0.813	-1.00 ± 1.66
9	51	-1.00 ± 0.82	-0.510 ± 0.419	± 1.59	± 0.813	-1.00 ± 1.79
10	51	-1.00 ± 0.82	-0.510 ± 0.419	± 1.59	± 0.813	-1.00 ± 1.79
11	51	-1.00 ± 0.82	-0.510 ± 0.419	± 1.59	± 0.813	-1.00 ± 1.79
12	50	-1.00 ± 0.84	-0.500 ± 0.422	± 1.63	± 0.813	-1.00 ± 1.83
13	50	-1.00 ± 0.84	-0.500 ± 0.422	± 1.63	± 0.813	-1.00 ± 1.83
14	50	-1.00 ± 0.84	-0.500 ± 0.422	± 1.63	± 0.813	-1.00 ± 1.83
15	50	-1.00 ± 0.84	-0.500 ± 0.422	± 1.63	± 0.813	-1.00 ± 1.83
16	50	-1.00 ± 0.84	-0.500 ± 0.422	± 1.63	± 0.813	-1.00 ± 1.83
17	50	-1.00 ± 0.84	-0.500 ± 0.422	± 1.63	± 0.813	-1.00 ± 1.83
18	50	-1.00 ± 0.84	-0.500 ± 0.422	± 1.63	± 0.813	-1.00 ± 1.83
19	50	-1.00 ± 0.84	-0.500 ± 0.422	± 1.63	± 0.813	-1.00 ± 1.83
20	50	-1.00 ± 0.84	-0.500 ± 0.422	± 1.63	± 0.813	-1.00 ± 1.83
21	49	-1.00 ± 0.87	-0.490 ± 0.424	± 1.66	± 0.813	-1.00 ± 1.87
22	51	-1.00 ± 0.82	-0.510 ± 0.419	± 1.59	± 0.813	-1.00 ± 1.79
23	51	-1.00 ± 0.82	-0.510 ± 0.419	± 1.59	± 0.813	-1.00 ± 1.79
24	54	-1.00 ± 0.77	-0.540 ± 0.415	± 1.50	± 0.813	-1.00 ± 1.69

B. Uncertainty of Daily Volume Measurements

An estimate of the uncertainty of the daily volume pumped through the station can be obtained from the 24 hourly flow measurements. The volume pumped through the Chicago Avenue Station is the average of the 24 hourly flow measurements times 1 day. For September 1, the average volume pumped through the station is 51.3 MG.

The uncertainty of the systematic daily volume measurements can be determined using the following equation:

$$CV_{Vb} = CV_{bV_{\substack{direction \\ known}}} + \frac{\Delta t}{m_v}\left(\sum_{k=1}^{n} Q_k^2 CV^2_{b_{k_{\substack{direction \\ unknown}}}} + \left(\sum_{k=1}^{n} Q_k CV_{b_{k_{\substack{unknown \\ but\ in\ same \\ direction}}}}}\right)^2\right)^{\frac{1}{2}} \qquad \text{Equation (10)}$$

Where:

CV_{Vb}	=	Relative uncertainty of the total bias volume measurement
$CV_{bV\ direction\ known}$	=	Bias with known direction of the total volume measurement
$CV_{bk\ direction\ unknown}$	=	Bias error in individual flow measurement *k* where the bias direction is unknown
$CV_{bk\ unknown\ but\ in\ same\ direction}$	=	Bias error in individual flow measurement *k* where the bias direction is unknown, but in the same direction for all meters
Δt	=	Time increment
Q_k	=	Value of flow measurement *k*
m_V	=	Sum of all *n* volume measurements. In this case, the uncertainty of the measured volume can be expressed in relative terms because the terms Q_k and m_V take into account the magnitude of the individual measurements.

Using *Equation (10)*, the relative systematic error, CV_{Vb}, was -1.00 ± 0.63 percent for September 1.

The average random uncertainty component for the daily volume can be obtained from the following expression:

$$CV_{Vr} = \pm \frac{\Delta t}{m_v}\left(\sum_{k=1}^{n} Q_k^2 CV_{rk}^2\right)^{\frac{1}{2}} \qquad \textit{Equation (11)}$$

Where:

CV_{rk}	=	Random error in individual flow measurement *k*
CV_{Vr}	=	Relative uncertainty of the volume measurement

Using *Equation (11)*, the relative random uncertainty of the daily volume, CV_{vr}, for September 1, 1998, was ± 0.32 percent.

The overall uncertainty of the daily volume can then be found by combining the systematic and random uncertainty components in the following manner:

$$CV_V = CV_{bV_{\substack{direction\\known}}} + \frac{\Delta t}{m_v}\left(\sum_{k=1}^{n} Q_k^2 CV_{b_{k_{\substack{direction\\unknown}}}}^2 + \left(\sum_{k=1}^{n} Q_k CV_{b_{k_{\substack{unknown\\ but\ in\ same\\ direction}}}}}\right)^2 + \sum_{k=1}^{n} Q_k^2 CV_{r_k}^2\right)^{\frac{1}{2}} \qquad \textit{Equation (12)}$$

For the date in question, the overall uncertainty of the daily volume, CV_V, was found to be -1.00 ± 0.70 percent, or -0.513 ± 0.360 MG (-1.00 ± 0.70 percent times 51.3 MG). The 95-percent confidence interval on the daily volume, CI_v, would then be -1.00 ± 1.45 percent (-1.00 ±[0.70 times 2.069]). Note that the 95-percent confidence interval for the daily volume (-1.00 ± 1.45 percent) is much narrower than the 95-percent confidence interval for the hourly flow measurement (-1.00 ± 3.68 percent). This is because the random errors and systematic errors with unknown direction associated with an hourly flow measurement are statistically canceled when they are summed over a day's time. The average random, systematic, and overall uncertainty for each day in each 2-week study period were found using the above method. A summary of the daily volume uncertainties for the September 1998 study period appears in Table 9.

Table 9
Estimated Uncertainties for Daily Volumes in September 1998 Study Period

Date	CV_{Vb} (%)	CV_{Vr} (%)	CV_V (%)	CI_V (%)
September 1	-1.00 ± 0.63	± 0.32	-1.00 ± 0.70	-1.00 ± 1.45
September 2	-1.00 ± 0.59	± 0.31	-1.00 ± 0.67	-1.00 ± 1.39
September 3	-1.00 ± 0.60	± 0.32	-1.00 ± 0.68	-1.00 ± 1.41
September 4	-0.83 ± 0.61	± 0.30	-0.83 ± 0.68	-0.83 ± 1.41

Table 9
Estimated Uncertainties for Daily Volumes in September 1998 Study Period

Date	CV_{Vb} (%)	CV_{Vr} (%)	CV_V (%)	CI_V (%)
September 5	-1.00 ± 0.62	± 0.32	-1.00 ± 0.70	-1.00 ± 1.45
September 6	-1.00 ± 0.59	± 0.31	-1.00 ± 0.67	-1.00 ± 1.38
September 7	-1.00 ± 0.61	± 0.32	-1.00 ± 0.69	-1.00 ± 1.43
September 8	-1.00 ± 0.63	± 0.32	-1.00 ± 0.71	-1.00 ± 1.46
September 9	-1.00 ± 0.62	± 0.32	-1.00 ± 0.70	-1.00 ± 1.45
September 10	-1.00 ± 0.62	± 0.32	-1.00 ± 0.70	-1.00 ± 1.45
September 11	-0.90 ± 0.47	± 0.33	-0.90 ± 0.57	-0.90 ± 1.18
September 12	-0.50 ± 0.28	± 0.33	-0.50 ± 0.43	-0.50 ± 0.90
September 13	-0.50 ± 0.27	± 0.33	-0.50 ± 0.43	-0.50 ± 0.89
September 14	-0.50 ± 0.47	± 0.29	-0.50 ± 0.55	-0.50 ± 1.13

C. Uncertainty of Annual Volume Measurements

The uncertainty in the annual volume pumped through the station can be estimated using the estimated uncertainty in daily volume measurements. As mentioned earlier, the study period consisted of 2-week periods in September 1998, and February and May of 1999. In total, there were 42 days in the study period. Over this time period, the average systematic uncertainty for a daily volume measurement, CV_b, was determined to be -0.72 ± 0.44 percent (± 0.14 percent from unknown biases and ± 0.41 percent from unknown biases known to be in the same direction for all meters) and the average random uncertainty for a daily volume measurement, CV_r, was estimated to be ± 0.33 percent. The average uncertainty in daily volume would then be -0.72 ± 0.56 percent, and the average 95-percent confidence interval for the daily volume would be -0.72 ± 1.16 percent.

The uncertainty in the annual volume pumped through the Chicago Avenue Station, CV_V can be determined as follows:

$$CV_V = CV_{b_{\substack{direction\\known}}} \pm \left(\frac{CV^2_{b_{\substack{direction\\unknown}}}}{n} + CV^2_{b_{\substack{unknown\\but\ in\ same\\direction}}} + \frac{CV_r^2}{n} \right)^{\frac{1}{2}}$$

$$= -0.72 \pm \left(\frac{0.14^2}{365} + 0.41^2 + \frac{0.33^2}{365} \right)^{\frac{1}{2}} = -0.72 \pm 0.41\%$$

Equation (18)

The 95-percent confidence interval of the annual volume, CI_v, would then simply be -0.72 ± 0.80 percent (-0.72 ±[0.41 times 1.960]). The 95-percent confidence interval for the annual volume (-0.72 ± 0.80 percent) is s less than the 95-percent confidence interval for the daily volume (-0.72 ± 1.16 percent). Most of the random error and unknown bias error associated with the daily volume measurement is statistically canceled when determining the uncertainty of the annual volume.

4. Quality Assurance

If the water accounting system is moved to the lakefront, there is a concern that if one of the direct diverter's flow measurement systems goes down, that there would be no way to measure the withdrawals from the lake. Thus, it is desirable that the direct diverters have a backup measurement system and, if possible, some other independent check on the measurements to ensure that the measurements are reasonable and accurate.

There are many backup systems at the Chicago Avenue Station. If a problem is detected in a particular venturi meter or its corresponding pressure transmitter, that venturi meter and its pump can be shutdown and a different venturi and pump can be used in its place for metering and distribution. Also, all of the venturi meters at the Chicago Avenue Station are equipped with manometers that can be used as a backup to the pressure transmitters.

The SCADA system used to totalize the flow consists of several elements. A schematic of the SCADA system showing the flow and storage of data is provided in Appendix B. The signal from each pressure transmitter is sent to a computer (CP2), located at the plant, where the flow data is displayed, processed, and temporally stored. This computer is only capable of storing 3 days' worth of data. Therefore, the control center computer system (CP3) located at the Jardine water treatment plant reads the data from the CP2 and is responsible for storing and maintaining the flow records. Note that if CP2 were to fail, the data would not be communicated to CP3. The CP3 central control computer system consists of two computers with automatic failover such that if one computer fails, the other one takes over automatically. Both of these computers store data from the pumping station so none of the data should be lost in the event that either computer fails. The data stored on CP3 is also backed-up on tape.

The data is transferred from the CP2 computer at the plant to the CP3 computer at Jardine over a dedicated communication line (i.e., a telephone line). This communication line does not have a backup. However, since the CP2 at the station can store up to 3 days of data, no data will be lost if the line is repaired within 3 days.

If the SCADA system were to fail, there are no backup recorders at the station. Readings could, however, be obtained manually from the venturi's manometer. This data would then be manually inputted in the SCADA system once the problems with the SCADA system were corrected.

Unlike the stream-operated pumping stations, there are no chart recorders at the Chicago Avenue Station. Thus, the Chicago Avenue Station does not have this additional level of backup that the steam-operated stations do. Also, it is desirable to have an independent check on the flow measurement system employed by the Chicago Avenue Station. The steam-operated stations can use the chart recorders as an independent check. However, the Chicago Avenue Station does not have chart recorders, and thus there is no easily identifiable independent check on the flow measurement system.

5. Summary of Inadequacies in the Current Metering Systems

For the most part, the current metering system provided a reasonable level of accuracy and has acceptable quality assurance. There are few areas of the metering system that appear deficient.

- The actual venturi meters are not calibrated. Rather, the City assumes that the manufacturer's rating curves are correct. Calibration of the venturis would confirm or deny this assumption.

- No backup data recorders exists. Therefore, should the SCADA system fail, all flow data at the Chicago Avenue Station is lost. Further, without two data sources, any additional uncertainty due to the sampling accuracy cannot be determined.

- Although the Quality Control discussion (Section 4) indicated that the manometers at the Chicago Avenue Station could be used to measure the flow upon failure of the data recording system, this appears not to have occurred for some data of the test period as discussed in Section 3. The Quality Assurance plan of the pumping station should clearly state what procedure the plant operation would take when such incidence occurs.

- The overall accuracy in estimating the water supply pumpage is dependent upon many measurement and analysis functions. The documented technical review and much previous work were focused on the accuracy of the pumpage measurements in hardware (i.e., meters, calibrator, pressure transmitter, etc.) and software (SCADA, etc.). This analyses does not take into account procedural errors such as inconsistent data in water supply pumpage as a result of the reporting mechanism.

6. Recommendations for Long-Term QA/QC and Improvements to Metering

Recommendations for long-term QA/QC and improvements to metering are as follows:

- Calibration of the venturi meters to determine if the manufacturer's rating curves are valid.
- Occasional inspection and measurement, if physically possible, of the inlet and throat of the venturi meters to determine any possible presence and effects of corrosion and tuberculation on the meter's accuracy.
- Installation of a backup recording devices.
- Routine auditing of various water withdrawal reports, as part of the long-term QA/QC, as a means of accounting for procedural errors.

7. Conclusions

Some of the important conclusions are summarized below:

- For operational purposes, the City can determine the hourly flow measurement reading to within -0.72 ± 3.57 percent at the Chicago Avenue Station. This value takes into account the random and systematic uncertainty associated with the venturi meters, pressure transmitters, calibration equipment, and recording system.

- On an annual basis, the total volume pumped through the station can be determined to within -0.72 ±0.80 percent. The 95-percent confidence interval for the annual volume is narrower than the 95-percent confidence interval for the hourly flow measurements made at the Chicago Avenue Station because the random and unknown bias errors associated with the measurement are statistically canceled when the measurements are summed over a year's time.

- With the exception of the SCADA system, all the metering system has redundancy or backup for quality assurance. There is no backup data recorder at this time.

- There is no independent check of the flow measurement system that can be used as an indicator when there is a problem within the system.

References

American Society of Mechanical Engineers, *Fluid Meters: Their Theory and Application.* ASME, New York, 6th ed., 1971.

AMETEK Power Instruments, "AMETEK Modcall II Specifications," no date provided.

Analog Input Module PPX:505-6108A Electrical Specification [for the SCADA system]; date not provided.

City of Chicago. Correspondence between R. W. Pence of the City of Chicago and David Clemmans of Energy Associates Inc., regarding the "BIF Flow Metering Equipment," August 18, 1977.

City of Chicago. Correspondence between Conrad Bazylewski of the City of Chicago and F. L. Sommer of F. B. Leopold Company regarding the "Printed Accuracy Data on the Venturi Tubes and Simplex Flow Meters," March 16, 1977.

Foxboro Company. Telephone conversation between Technical Support at the Foxboro Company and Nicole Grossen of Mead & Hunt, Inc., regarding the accuracy, stability, and temperature uncertainties of the Foxboro 823DP Series Differential Pressure Transmitters, fall of 2000.

International Organization for Standardization, *Measurements of Fluid Flows by Means of Pressure Differential Devices*, ISO, Switzerland, 1991.

Mead & Hunt, Inc., *Technical Review of Lake Michigan Water Withdrawal by the City of Evanston – Draft,* July 2002.

Mead & Hunt, Inc., *Technical Review of Lake Michigan Withdrawals – Southwest Pumping Station,* July 2002.

Meriam Instrument, *General Installation, Operation, and Maintenance Instructions for Meriam Manometers,* April 1992.

Miller, Richard W., *Flow Measurement Engineering Handbook*, McGraw-Hill, New York, 1996.

Spitzer, David W., *Industrial Flow Measurement.* Instrument Society of America, North Carolina, 1990.

Final Report

Technical Review of Lake Michigan Withdrawals Lakeview Pumping Station

City of Chicago

Prepared for:

U.S. Army Corps of Engineers – Chicago District
Chicago, Illinois

Prepared by:

MEAD & HUNT

August 2003

Table of Contents

Page

Executive Summary . . . . . E-i

1. General Description 1
   A. Summary of Operation 1
   B. Flow Measurement 1
   C. Flow Totalization 2
   D. Calibration 2

2. Uncertainty in Metering and Measurement Components 4
   A. Venturi-Type Meters 4
   B. Pressure Taps 5
   C. Meter Installation 5
   D. Sampling 6
   E. Pressure Differential Measurement 7
   F. Dry Calibration of Pressure Transmitters 8
   G. SCADA System 8

3. Sample Uncertainty Calculation for Effluent Meters 9
   A. Uncertainty of Hourly Flow Measurements 9
      (1) Systematic (Bias) Error 9
      (2) Random Error 16
      (3) Combining Systematic and Random Errors 17
   B. Uncertainty of Daily Volume Measurements 19
   C. Uncertainty of Annual Volume Measurements 21

4. Quality Assurance 23

5. Summary of Inadequacies in the Current Metering Systems 24

6. Recommendations for Long-Term QA/QC and Improvements to Metering 25

7. Conclusions 26

8. References 27

List of Tables

Table		Page
1	Flow Measurement Devices Used at the Lakeview Station	2
2	Upstream Disturbances and Approximate Approach Lengths for the Various Venturi Meters at the Lakeview Station	6
3	Results of the Random Complete Block Design Comparisons for the Mayfair, Central Park, Roseland, Springfield and Western Pumping Stations	7
4	Summary of Flow Characteristics for the First Hourly Reading on September 1, 1998	11
5	Uncertainty from the Pressure Transmitters and Calibration Equipment for the First Hourly Reading on September 1, 1998 for the East and West Venturis	13
6	Absolute Bias Estimates for the First Hourly Readings Taken on September 1, 1998	14
7	Systematic, Random, and Overall Uncertainty Estimates for Hourly Flow Measurements Made on September 1, 1998	18
8	Estimated Uncertainty for Daily Volumes in September 1998 Study Period	21

List of Appendices

Appendix

A Schematic of Lakeview Pumping Station

B Schematic of the SCADA System

Executive Summary

Currently, diversion of water from Lake Michigan for the state of Illinois is measured at the Chicago Sanitary and Ship Canal at Romeoville. The Great Lakes Mediation Memorandum of Understanding established a lakefront diversion accounting system and specified a 3-year transition period to assess the technical acceptability of moving the diversion measurement system to the lakefront. A lakefront diversion accounting system requires metering of all domestic water withdrawals from Lake Michigan and the direct diversions into the Chicago Sanitary and Ship Canal system at the Chicago River, the Calumet River, and the North Shore Channel at Wilmette. During the three-year transition period, the U.S. Army Corps of Engineers (USACE) has been tasked to initiate a technical review of the accuracy of the reported domestic withdrawals from Lake Michigan.

The USACE retained Mead & Hunt, Inc., to evaluate the accuracy of domestic withdrawals from Lake Michigan. A total of 12 pumping stations in the city of Chicago (City) and six suburban pumping stations will be evaluated. These evaluations include revisions to the investigations conducted on the City's Mayfair and Thomas Jefferson Stations and the city of Evanston's Station by the Illinois District of the U.S. Geological Survey. This report presents a summary of the flow measurement techniques at the Lakeview Station as employed by the City, as well as estimates of the uncertainty of daily and annual volume measurements. Presently, the Lakeview Station consists of four electrically operated pumps and two venturi-type meters.

To obtain an estimate of the uncertainty of an individual flow measurement, we examined the manufacturer's accuracy specifications for both the primary flow measurement devices (i.e., the venturi-type meters) and secondary measurement devices (i.e., the pressure transducers). The Lakeview Station's calibration technique, sampling technique, and device installation were also examined. All of the sources of uncertainty identified from this analysis were then classified as either random or systematic in nature. Using this information and the data logs provided by the City, we obtained an estimate of the uncertainty of an individual flow measurement. From this information, an estimate of the uncertainty of the daily and annual volume withdrawn from the lake can be obtained using standard statistical techniques.

Some of the important conclusions are summarized below:

- The east and west meters are oversized for this application causing error values to be significantly high.

- For operational purposes, the City can determine the hourly flow measurement reading to within -0.50 ± 35.30 percent at the Lakeview Station. This value takes into account the random and systematic uncertainty associated with the venturi meters, pressure transmitters, calibration equipment, and recording system.

- On an annual basis, the total volume pumped through the station can be determined to with -0.50 ± 27.15 percent. The 95-confidence interval for the annual volume is narrower than the 95-percent confidence interval for the hourly flow measurements made at the Lakeview Station because the random and unknown bias errors associated with the measurement are statistically canceled when the measurements are summed over one year's time.

- The Lakeview plant does not have backup or redundancy with the exception of the SCADA system which collects and stores data on multiple computers. Even so, should the SCADA fail, there is no backup data recorders. There are no backup pump/meter systems should the east and west venturis fail.

- There is no independent check of the flow measurement system that can be used as an indicator when there is a problem within the system.

Technical Review of
Lake Michigan Withdrawals
Lakeview Pumping Station
City of Chicago

1. General Description

A. Summary of Operation

The Lakeview Pumping Station (Lakeview Station) is an electrically-operated plant consisting of four pumps and two venturi-type meters. The flow from these pumps is split between the two venturis, referred to as the east and west venturis. The pressure differentials on the meters are measured using Johnson Yokogawa pressure transmitters. The output signals from the pressure transmitters are sent to the Supervisory Control and Data Acquisition (SCADA) system for totalization. The SCADA system samples the pressure transmitter signals every minute. These 1-minute readings are then used to determine the average daily volume pumped through any given venturi meter. No backup data recording system to the SCADA system exists at the Lakeview Station. A schematic of the Lakeview Station is provided in Appendix A.

B. Flow Measurement

The Lakeview Station uses two venturi-type meters to measure the flow pumped through the station. These meters were originally installed in the South Water Filtration Plant sometime between 1941 and 1944. Sometime prior to 1967, these meters were reconditioned, modified, and then installed in the Lakeview Station in 1967. The east and west venturi have identical specifications[1] that are shown in Table 1.

[1] The coefficient of discharge was calculated using Equation (1) of this report and the beta-ratio, venturi diameter, maximum flow and maximum differential pressure that was provided by the City of Chicago.

Table 1
Flow Measurement Devices Used at the Lakeview Station

Manufacturer	BIF
Model No.	unknown
Approach Pipe Diameter (in.)	60
Throat Diameter (in.)	45
β-Ratio	0.75
Coefficient of Discharge	0.9739
Maximum Flow Rate (MGD)	120.6
Maximum Differential Pressure (in. Water)	27.78

At times, either or both of the east or west venturi's flow may reach the lower theoretical accuracy limits. At these lower limits, a very small signal is produced which is difficult to read. This occurrence is due to the venturi meters being used for a flow range other than at which they were originally designed. Considering this and that these venturis were modified for their current installation, the manufacturer has provided inconsistent statements as to the accuracy of the venturi.

C. Flow Totalization

A SCADA system is used for flow totalization at the Lakeview Station. First, the output from the pressure transmitters is sent to the SCADA system. The SCADA system samples the output every minute. The pressure transmitters' signal is divided by an integrator constant to convert it to a volume measurement. The sum of the 1,440 1-minute readings is then used to determine the volume pumped through the system on a daily basis. There are no backup chart recorders at the Lakeview Station.

D. Calibration

An effective calibration procedure should calibrate both the primary flow meter and its secondary measurement device. First, the secondary measurement device, such as a pressure transmitter, should be calibrated to ensure it is reading correctly. Then, the flow meter itself should be calibrated to ensure it is functioning properly. The City of Chicago (City) does not perform any wet calibrations on the primary flow meters or their secondary measurement devices. Thus, all of the City's calibrations can be considered inferential in nature. The secondary measurement devices (i.e., the pressure transmitters, totalizers, etc.) are dry-calibrated once a year. If the City notices a problem or discrepancy, the instruments are checked; repaired, if necessary; and calibrated. If these tasks cannot be completed immediately, the unit is taken out-of-service until it can be repaired and calibrated. When a pressure

transmitter or totalizer is calibrated, a full dry- calibration is performed using the Rochester DPG-700 pressure gauge. This pressure gauge provides a "calibrated" differential pressure that can be used to determine if the pressure transmitter or totalizer is reading properly. For the primary flow measurement devices, the City assumes the manufacturers' rating tables are correct.

After all the individual instruments have been dry-calibrated, the City performs an end-to-end calibration of the pumping station. When an end-to-end calibration is performed, the venturi-type meters are connected to manometers in order to obtain the pressure differentials. After an hour has passed, the volume measured by the manometer readings is compared to the volume measured by the SCADA. The City wants the difference between these two readings to be less than 2 percent for both the SCADA and instantaneous readings. This type of calibration is done to ensure that all the secondary measurement devices are working together properly.

During the calibration, the City takes readings both from Meriam manometers and from the calibrated flow signal over a period of time, typically at least one hour. The averages of both sets of data are compared and if a significant difference in readings is detected, the calibrators are sent out for re-calibration and re-certification. The last re-calibration was April 2000. Per the manometer's specifications, the "NIST recognizes the U-type Manometer as a primary standard due to its inherent accuracy and simplicity of operation." The manometers do not require calibration, therefore comparing the values from the calibrated flow signal to the manometer's readings is a reasonable method of checking whether the calibrators should be re-certified.

2. Uncertainty in Metering and Measurement Components

A. Venturi-Type Meters

The manufacturer has provided inconsistent statements as to the accuracy of the venturi. One manufacturer statement provides an ±0.75 to ±1.00 percent of flow over a range and the other states that given that the meters are significantly oversized for the application, it is difficult, if not impossible, for the setup to give accurate results.

The BIF meter specifications stating the ±0.75 to ±1.00 percent accuracy does not quantify the meter's range, but states that it is limited by the meter's size and proportions. Based on specifications for similarly sized venturi meters that were used in other City of Chicago applications, the range is typically the top 90 to 95 percent of the meter's flow rate. The east and west venturis are oversized for this application, thus having a capacity of 102.6 MGD while typical flows through the meters range from 17 to 55 MGD, only 16.6 to 53.6 percent of the meter's capacity. Therefore, at times, either or both of the east or west venturi's flow may near the lower theoretical accuracy limits. At these lower limits, a very small signal is produced which is difficult to read. This occurrence is due to the venturi meters being used for a flow range other than at which they were originally designed.

Although the two manufacturer statements contradict each other and the accuracy of ±0.75 to ±1.00 percent may not be totally valid at low flows, no other uncertainty information is available. Therefore, an accuracy of ±1.00 percent of flow will be assumed for this analysis despite the fact that the venturi's uncertainty is likely higher. The venturi uncertainty is systematic in nature with an unknown bias direction.

Since the BIF meters have been in use for 60 years, a possibility of pitting, tuberculation, and corrosion in the critical areas exists. The City has not inspected any of the meters at the Lakeview Station. However, the meters at the Lakeview Station are similar to the meter inspected by the City at the Southwest Station in that the throats of the meters are lined with bronze. Bronze is known for its ability to resist corrosion and formation of tubercles. Therefore, it is reasonable to assume that any significant corrosion or tuberculation would occur on the inlet piping only. This was the case when the meter was inspected at the Southwest Station. Since the water pumped through the Lakeview Station and the Southwest Station have the same water chemistry and are treated in the same manner, it is assumed that if the venturis at the Lakeview Station were inspected, the results would be similar to the results of the meter inspection at the Southwest Station. Therefore, based on the determinations made in the *Technical Review of Lake Michigan–Southwest Pumping Station*, any error due to corrosion and tuberculation is considered insignificant at the Lakeview Station.

B. Pressure Taps

The pressure taps that are used to measure the pressure differential should be square with no roughness, burrs, or wire edges (Miller, 1996). If the pressure taps that are used do not meet these requirements, then a bias error would be introduced. It was not practical to inspect the pressure taps of these meters. The flow measurement devices were all constructed under a controlled manufacturing environment with very little opportunity for a pressure tap to be constructed poorly. Thus, we assumed that the manufacturer constructed the pressure taps correctly and that no additional error would be introduced due to the pressure taps.

C. Meter Installation

An appropriate length of straight, circular pipe is required upstream of the flow meter to guarantee that the velocity profile entering the meter is not distorted and that the meter will perform properly. The length of this approach section depends on number and types of bends and fittings located upstream of the meter.

Table 2 lists the approximate approach length and upstream fittings for the east and west meters located at the Lakeview Pumping Station. The "Required Approach Length for Zero Error" and the "Required Approach Length for 0.5 Percent Error" values reported in Table 2 were taken from ISO 5167-1:1991.

As shown in Table 2, the west and east venturis, do meet the minimum length to the first upstream fitting requirements, but do not meet the minimum length to the second upstream fitting requirements. The west meter only has an upstream length to the second fitting of 21.2 feet which falls below the required minimum length for 0.5 percent error (68.8 feet). The east meter's upstream length to the second fitting is 32.3 feet, which is less than the required minimum length for a 0.5 percent error (68.8 feet). ISO 5167-1:1991 reference materials only provide lengths for zero error and 0.5 percent error. Therefore, although the second upstream lengths are significantly less than the required minimum length for a 0.5 percent error, the exact error value is unknown. Consequently, although the error may be greater than 0.5 percent, this value will be used in the analysis. The two bends in different planes introduce a swirling affect of the flow profile. As reported by Miller, the introduction of swirl upstream of a venturi-type meter causes flow to be under reported. Therefore, the additional error will be -0.5 percent. This value is systematic in nature.

Table 2
Upstream Disturbances and
Approximate Approach Lengths for the
Various Venturi Meters at the Lakeview Station

Venturi	First Upstream Fitting	First Upstream Approach Length (feet)	Required Pipe Length for Zero Error (feet)	Required Pipe Length for± 0.5% Error (feet)	Second Upstream Fitting	Second Upstream Approach Length (feet)	Required Pipe Length for Zero Error (feet)	Required Pipe Length for± 0.5% Error (feet)
West	Single Bend	26.7	22.5	15.0	Two bends in different planes	21.2	100.0	68.8
East	Single Bend	35.0	22.5	15.0	Two bends in different planes	32.3	100.0	68.8

Inadequate straight piping downstream of the meter can also affect the meter's accuracy. ISO 5167-1:1991 reference materials indicate that as long as the downstream length of straight piping exceeds four times the meter's throat diameter, no additional error is expected. Unlike for the upstream piping lengths, the ISO 5167-1:1991 reference does not indicate what length would be required to provide an uncertainty of 0.5 percent or any other uncertainty value. For the Lakeview station, the east and west meter's both have a throat diameter of 3.75 feet. Given this, 15 feet of straight piping is required to insure no additional uncertainty due to the downstream piping installation. Both the east and west venturi meter's only have 10.7 feet of straight piping before the meter's first downstream obstruction. Although, the downstream lengths do not meet downstream piping requirement of four throat diameters, no error value is available in the ISO 5167-1:1991 reference. Therefore, although additional error may be present due to the downstream piping, it cannot be quantified and included in the actual uncertainty calculations.

D. Sampling

Additional uncertainty can also be introduced due to how the flow measurement data is recorded. If, for example, a quantity varies sinusoidally, but that quantity is only measured at the times when the quantity is at a peak, then the average measurements will be higher than the true average. This would introduce a bias into the system. On the other hand, if a quantity is measured or sampled frequently, then there will be very little error introduced due to the sampling. The flow rates at the Lakeview Station are sampled every minute, and these 1-minute sample readings are used to determine the average daily volume pumped through the station. Unlike the some of the other Chicago stations, there are no continuous chart recorders with which to compare the 1-minute readings at the Lakeview Station. Thus,

the Lakeview Station data alone is not sufficient to determine whether the 1-minute readings are adequate.

The Mayfair, Central Park, Roseland, Springfield and Western Pumping Stations all have average daily flows from chart recorder data to compare to their instantaneous 1-hour SCADA readings. A randomized complete block design was preformed on the data for these five stations and their results are provided in Table 3.

Table 3
Results of the Random Complete Block Design Comparisons for the Mayfair, Central Park, Roseland, Springfield and Western Pumping Stations

Station	Number without Statistical Difference	Number with Statistical Difference
Central Park	2	4
Mayfair	25	3
Roseland	4	7
Springfield	5	1
Western	6	0

As shown in Table 3, the results are not consistent among the five stations tested. The results from the Mayfair, Springfield and Western Stations indicate that in more cases than not there is no statistical difference between averages. The opposite is true for the Central Park and Roseland Stations. However, the statistical comparison was between the average daily volume from the chart recorder and average of 24 one-hour instantaneous SCADA readings, since 1-minute SCADA readings were not available. The actual daily flow volume that is recorded for LMO reporting is based on 1-minute readings. Therefore, a possibility still exists that the chart recorder's daily average flow and the SCADA's daily flow based on 1-minute readings could be statistically the same.

It is assumed that sampling frequency does not produce an additional source of error at the Lakeview Station since the combined results from the Mayfair, Central Park, Roseland, Springfield and Western Pumping Stations indicate that it is more likely than not that sampling frequency at the Lakeview Station is adequate.

E. Pressure Differential Measurement

The pressure differentials of the east and west venturi meters are measured using Johnson Yokogawa pressure transmitters. Based on the manufacturer's performance specifications, these pressure transmitters have an accuracy of ± 0.2 percent of the calibrated span. This accuracy includes effects

caused by hysteresis, linearity, and repeatablity. The Johnson Yokogawa transmitters have a dead band of ± 0.05 percent calibrated span and a temperature effect of ± 0.2 percent of calibrated span per 90 degrees F. Stability was not provided in the manufacturer specifications and thus assumed to not be a significant source of error. The lake temperature varies from about 32 to 70 degrees F. This is approximately a 40-degree F temperature range. Both of the Johnson Yokogawa transmitters have a calibrated span of 27.78 inches of water. It is assumed that the specifications provided by the manufacturer are correct. The accuracy and temperature effect are considered to be systematic in nature with the direction of this bias being unknown. The dead band is a random error.

F. Dry Calibration of Pressure Transmitters

The secondary measurements devices (i.e., pressure transmitters) are calibrated once a year using a Rochester DPG-700 module. Because the pressure transmitter is adjusted to the Rochester DPG-700 reading, all of the uncertainty components of the Rochester DPG-700 module will become a bias reported by the Yokogawa pressure transducer. Since both pressure and current readings are taken from the Rochester DPG-700 module during calibration, two accuracy values apply. For the pressure reading, the accuracy is reported to be ± 0.05 percent of full scale plus one digit of display. Based on manufacturer's specification, the pressure display is shown to 0.002 pound per square-inch gauge (PSIG), which is equal to 0.055 inches of water. The range of the Rochester DPG-700 module is 0 to 30 pounds per square inch ([psi] or 830.80 inches of water). The current reading's uncertainty is reported as ± 0.05 percent of full scale plus one digit of display. The upper range limit for the current is 50 mA. The current resolution is 0.005 mA. Note, however, that the two parameters of the calibrator (accuracy of the pressure module and accuracy of the current multimeter) may not be totally uncorrelated since the pressure transmitter converts a physical measurement, the pressure, into an electrical signal while the multimeter loop current appears to be correlated to the pressure from the pressure module. Although, these parameters may not be totally uncorrelated, it was not accounted for in this analysis. The direction of these biases, although unknown, will be in the same direction for both the meters in the Lakeview Station.

G. SCADA System

In order for the SCADA system to determine the volume pumped through the Lakeview Station, the analog signal from the pressure transmitter was converted to a digital signal using an analog input module. The manufacturer's specifications state that the analog to digital conversion is accurate to within ± 1.25 percent of full scale over operating range, and to within ± 0.7 percent of full scale at 25 degrees C. Since the water temperature varies from 32 to 70 degrees F, the uncertainty value of ± 1.25 percent of full scale over operating range will be used. In this case, the full scale was assumed to be the full scale of the venturi-type meter to which the pressure transmitter was connected. The error due to the analog to digital conversion is random in nature.

3. Sample Uncertainty Calculation for Effluent Meters

To demonstrate how the uncertainty of the measured volume pumped through the Lakeview Station was estimated, a series of sample calculations follows. The method used to estimate the uncertainty is similar to that described in the *Technical Review of Lake Michigan Water Withdrawal by the City of Evanston*. Please refer to this document for background on the statistical handling of measurement uncertainty.

The City provided the hourly logs of three 2-week periods. These time periods were the first 14 days in September 1998, and February and May 1999. There were some periods of missing data due to the SCADA system being down. These missing periods were estimated based on data trends. In reviewing the data, it was apparent that some hourly values were not constant over the entire hour. For example, if during an hour block, the meter was pumping 60 MGD but only pumping half an hour, the average flow for that hour would be one-half the pumped flow, or 30 MGD. Using the 30 MGD would incorrectly cause the metering uncertainty to be greater because 30 MGD is significantly less than the optimum flow range of the metering system. Therefore, any data points that appeared not to be constant flow over then entire hour were changed to zero. It was assumed that the Lakeview Station's pumpages over these time periods were representative of the typical pumpages. The uncertainty of the hourly and daily readings can be obtained using these assumptions. The uncertainties can be reported as the standard deviation of the measurements (expressed by the variable *s*) or in relative terms (expressed by the variable *CV*, which is the standard deviation of the measurements divided by the mean of the measurements).

A. Uncertainty of Hourly Flow Measurements

(1) Systematic (Bias) Error

The majority of the error components are systematic in nature. These systematic errors include error from the venturi, inadequate approach length, the pressure transmitters, and the calibration equipment. To determine the uncertainty of the hourly flow measurements, all uncertainties need to be in terms of percent accuracy of actual rate. The errors associated with the venturi and the inadequate approach lengths are already expressed in these terms. However, the accuracy associated with the pressure transmitters and calibration equipment are in terms of percent accuracy per calibrated span or full scale (FS).

The standard equation for the flow through a venturi-type meter is:

$$Q = \frac{C_d A_t}{\sqrt{1-\beta^4}} \sqrt{2g\Delta h} \qquad \textit{Equation (1)}$$

Where:

Q	=	Flow rate
C_d	=	Discharge coefficient
A_t	=	Area of the throat section
β	=	Ratio of the throat diameter to the approach section diameter (also referred to as the beta-ratio)
g	=	Acceleration due to gravity
Δh	=	Pressure differential across the meter

Based on manufacturer information, the C_d value for both venturi meters is 0.9739.

Note that the model assumes that the discharge coefficient, throat area, and throat to approach diameter ratio (i.e. β-ratio) introduce no errors to the discharge calculations. That is, the differential pressure head of the venturi meter is the only source of error or uncertainty.

At the Lakeview Station, flow from any of the pumps is split between the east and west venturi meters. For illustration of the uncertainty calculations, we will be examining the pumping characteristics for September 1, 1998. Under normal operating conditions, water is routed through both the east and west venturi's, as was the case on this day.

The throat area, A_t, for both the east and west venturi is:

$$A_t = \frac{\Pi(45.0)^2}{4} = 1590.4 in^2 = 11.04 ft^2 \qquad \textit{Equation (2)}$$

For the first hour on September 1, 1998, 52.25 million gallons per day (MGD) and 42.75 MGD were flowing through the east and west venturis, respectively. The pressure differential for the east venturi is calculated below using Equation (1), and the β-ratio of 0.75 from Table 1.

$$\Delta h = \left[\frac{Q\sqrt{1-\beta^4}}{C_d A_t \sqrt{2g}}\right]^2 = 12\left[\frac{1.547(52.25MGD)\sqrt{1-(0.75)^4}}{(0.9739)(11.04\,ft^2)\sqrt{2(32.16\,ft/s^2)}}\right]^2 = 7.20in. \qquad \textit{Equation (3)}$$

The values of 12 and 1.547 that appear in *Equation (3)* are unit conversion factors to convert feet to inches and MGD to cubic feet per second (cfs), respectively. A summary of flow characteristics for the first hourly reading of the two venturi-type meters on September 1 appears in Table 4.

Table 4
Summary of Flow Characteristics for the First Hourly Reading on September 1, 1998

Venturi	Throat Area (sq. ft.)	Flow Rate (MGD)	Pressure Differential (in. Water)
East	11.04	52.25	7.20
West	11.04	42.75	4.82

The pressure differentials of all the venturi-type meters are measured using Johnson Yokogawa pressure transmitters. Based on the manufacturer's performance specifications, these pressure transmitters have an accuracy of ± 0.2 percent of the calibrated span. This accuracy includes effects caused by hysteresis, linearity, and repeatablity. The pressure transmitters also have a temperature effect of ± 0.2 percent of calibrated span per 90 degrees F. Both of the Johnson Yokogawa transmitters have a calibrated span of 27.78 inches of water. Thus, the uncertainty in the pressure differential measurement due to accuracy would be ± 0.056 inches of water (i.e., ± 0.002 times 27.78) for both the east and west venturi The uncertainty in the flow rate due to the accuracy of the pressure transmitter for east venturi would then be:

$$CV_{Qa} = \frac{Xs_p}{\Delta h} = \frac{(0.5)(\pm 0.056in)}{7.20in} = \pm 0.389\% \qquad \textit{Equation (4)}$$

Where:

CV_{Qa}	=	Uncertainty in the flow rate due to the accuracy of the pressure transmitter
s_p	=	Uncertainty in the pressure transmitter (due to transmitter accuracy in this case)
X	=	Sensitivity coefficient equal to 0.5 for the pressure transducer as the flow is directly proportional to the square root of the pressure differential in Equation (1)
Δh	=	Pressure differential

See *Technical Review of Lake Michigan Water Withdrawals by the City of Evanston* for additional information on the sensitivity coefficient, *X*. The uncertainty in the flow rate due to the transmitter's accuracy, and temperature affect for both the east and west venturis is shown in Table 5.

The pressure transmitters are calibrated using a Rochester DPG-700 calibrator. Since both pressure and current readings are taken from the calibrator, two independent accuracy values apply. For the pressure reading, the accuracy is reported to be ± 0.05 percent of full scale, plus one digit of display. Based on manufacturer's specification, the pressure display is shown to 0.002 PSIG, which is equal to 0.055 inches of water. The range of the Rochester DPG-700 module is 0 to 30 psi (or 830.80 inches of water). Thus, the uncertainty in the pressure component of the calibrator would be ± 0.470 inches of water (i.e., ± 0.0005 times 830.80, plus 0.055) for both the east and west venturis. The uncertainty in the flow rate due to pressure component of the calibrator for the east venturi meter would then be:

$$CV_{Qa} = \frac{Xs_p}{\Delta h} = \frac{(0.5)(\pm 0.470in)}{7.20in} = \pm 3.264\% \qquad \textit{Equation (5)}$$

The current reading's uncertainty is reported as ± 0.05 percent of full scale, plus one digit of display. The upper range limit for the current is 50 mA. The current resolution is 0.005 mA. Thus, the uncertainty in the current component of the calibrator would be ± 0.030 mA (i.e., ± 0.0005 times 50, plus 0.005) for the east and west venturi meters. The uncertainty in the flow rate due to current component of the calibrator for east meter would then be:

$$CV_{Qa} = \frac{Xs_i}{\Delta i} = \frac{(1.0)(\pm 0.030mA)}{12.15mA} = \pm 0.247\% \qquad \textit{Equation (6)}$$

Where:

s_i	=	Uncertainty due to the current reading for the calibrator pressure differential
Δi	=	Current differential

The current differential is known to be linear to the flow rate with 4 mA corresponding to zero flow, and 20 mA corresponding to flow meter capacity, which is 102.6 MGD for both the east and west venturis. Using this relationship, for the first hour on September 1, the corresponding currents would be 12.15 and 10.67 mA for east and west meters, respectively. Note that for this calculation, the sensitivity coefficient, *X*, is 1.0 since the flow rate is directly proportional to the current (i.e. a linear relationship). This process was repeated for west meter's DPG-700 pressure gauge accuracy. A summary of these estimates appears in Table 5.

Table 5
Uncertainty from the Pressure Transmitters and Calibration Equipment for the First Hourly Reading on September 1, 1998 for the East and West Venturis

Venturi	Instrument	Uncertainty Source	CV for Δh or ΔmA	URL or Calibrated Span	Uncertainty for Δh or ΔmA	CV for Flow (%)
East	Johnson Yokogawa	Pressure Transmitter	0.2% of calib. span	27.78 in. Water	0.056 in. Water	0.389
East	Johnson Yokogawa	Pressure Transmitter	0.2% calib. span/90°F	27.78. Water	0.025 in. Water	0.174
East	DPG-700	Calibrator	0.05% FS + 1 digit*	830.8 in. Water	0.470 in. Water	3.264
East	DPG-700	Calibrator	0.05% FS + 1 digit**	50 mA	0.030 mA	0.247
West	Johnson Yokogawa	Pressure Transmitter	0.2% of calib. span	27.78 in. Water	0.056 in. Water	0.581
West	Johnson Yokogawa	Pressure Transmitter	0.2% calib. span/90°F	27.78 in. Water	0.025 in. Water	2.59
West	DPG-700	Calibrator	0.05% FS + 1 digit*	830.8 in. Water	0.470 in. Water	4.876
West	DPG-700	Calibrator	0.05% FS + 1 digit**	50 mA	0.030 mA	0.281

* *One digit is equal to 0.055 in. Water*
** *One digit is equal to 0.005 mA*

In this study, the bias uncertainty estimates will be broken down into three categories:

- Bias uncertainty with a known bias direction.
- Bias uncertainty with an unknown bias, but known to be in the same direction for each meter.
- Bias uncertainty with an unknown bias direction.

Explanation of this breakdown was detailed in the *Technical Review of Lake Michigan Water Withdrawal by the City of Evanston*. Table 6 lists the type of bias uncertainty for each of the bias estimates for the first hourly readings of the east and west venturis. Additionally, Table 6 also provides the absolute bias estimates for the first hourly readings taken from the east and west venturis based on the following equation:

$$s_b = CV_{flow} \cdot Q_{\substack{first \\ hour}} = (0.00389)(52.25\,MGD) = 0.203\,MGD \qquad \text{Equation (7)}$$

where S_b is the standard deviation (or absolute uncertainty) of the flow measurement due to the respective systematic uncertainty estimate, CV_{flow} is the relative uncertainty in the flow rate and $Q_{first\ hour}$ is the flow for the first hour.

Table 6
Absolute Bias Estimates for the First Hourly Readings
Taken on September 1, 1998

Venturi	Bias Component	Type of Bias	CV_b(%)	S_b (MGD)
East	Venturi	Direction unknown	± 1.00	± 0.523
	Approach lengths	Direction known	- 0.50	- 0.261
	Pressure transmitters			
	– *Accuracy*	Direction unknown	± 0.389	± 0.203
	– *Temperature*	Direction unknown	± 0.174	± 0.091
	Calibrator			
	– *Pressure*	Direction unknown,	± 3.264	± 1.705
	– *Current*	but in same direction for all meters	± 0.247	± 0.129

Table 6
Absolute Bias Estimates for the First Hourly Readings
Taken on September 1, 1998

Venturi	Bias Component	Type of Bias	CV_b(%)	S_b (MGD)
West	Venturi	Direction unknown	± 1.00	± 0.428
	Approach lengths	Direction known	- 0.50	- 0.214
	Pressure transmitters			
	– *Accuracy*	Direction unknown	± 0.581	± 0.248
	– *Temperature*	Direction unknown	± 2.590	± 1.107
	Calibrator			
	– *Pressure*	Direction unknown,	± 4.876	± 2.085
	– *Current*	but in same direction for all meters	± 0.281	± 0.120

The systematic uncertainty estimates for the east and west meters can be combined as shown below in *Equation (8)* to determine the overall hourly systematic uncertainty for September 1, 1998. To determine the uncertainty of the sum of the three measurements, the individual uncertainty estimates should be combined on the basis of absolute uncertainty (i.e., standard deviations) and not relative uncertainty (i.e., coefficient of variation).

$$S_b = \sum_{i=1}^{l_1}\sum_{j=1}^{m} S_{b_{ij\ \text{direction known}}} \pm \left[\sum_{i=1}^{l_2}\sum_{j=1}^{m} S^2_{b_{ij\ \text{direction unknown}}} + \sum_{i=1}^{l_3}\left(\sum_{j=1}^{m} S_{b_{ij\ \text{unknown but in same direction}}}\right)^2\right]^{\frac{1}{2}} \qquad \textit{Equation (8)}$$

Where:

S_b = Combined uncertainty or standard deviation of the flow measurement

$S_{bij\ \text{direction known}}$ = Absolute bias uncertainty of known direction for measurement *i,j*

$S_{bij\ \text{unknown but in same direction}}$ = Absolute bias uncertainty of unknown direction but known to occur in the same direction for each meter for measurement *i,j*

$S_{bij\ \text{direction unknown}}$ = Absolute bias uncertainty of unknown direction for measurement *i,j*

m	=	The number of meters
I_1, I_2, I_3	=	The number of uncertainty components in $S_{bij\ \text{direction known}}$, $S_{bij\ \text{direction unknown}}$, and $S_{bij\ \text{unknown but in same direction}}$, respectively

For the first hour, using *Equation (8)*, the overall absolute bias uncertainty, S_b, was found to be -0.475 ± 3.876 MGD, which corresponds to a relative uncertainty, CV_b, of -0.50 ± 4.08 percent (i.e.,-0.475 ± 3.876 MGD divided by the total flow rate of 95 MGD). This process was repeated for each of the 24-hour readings taken during the day. The results are provided in Table 7 (table combining random and bias).

(2) Random Error

Only the uncertainty from the SCADA system and pressure transmitter's deadband were identified as being random in nature. The manufacturer states that the SCADA's analog-to-digital conversion can take place with an uncertainty of ± 1.25 percent of full scale. As mentioned earlier, it was assumed that full scale refers to full scale of the venturi-type meter. Thus, for both the east and west venturis with a capacity of ± 102.6 MGD, the absolute random uncertainty due to the SCADA system would be ± 1.283 MGD (± 0.0125 times 102.6 MGD). Hence for the first hour flow, the relative uncertainty estimate for the SCADA system would be ± 2.46 percent (i.e., ± 1.283 MGD divided by 52.25 MGD) and ± 3.00 percent (i.e., ± 1.283 MGD divided by 42.75 MGD) for the east and west meters, respectively.

The uncertainty due to the pressure transmitter's deadband was calculated using Equations (4) and (7). Using this methodology, the relative uncertainty estimates for the pressure transmitter's deadband would be ± 0.096 percent and ± 0.144 percent for the east and west meters, respectively, which corresponds to absolute uncertainty estimates of ± 0.050 MGD (i.e., ± 0.096 percent times 52.25 MGD) and ± 0.0616 MGD (i.e., ± 0.144 percent times 42.75 MGD) for the east and west meters, respectively.

The overall absolute random uncertainty can be determined by combining the absolute random uncertainties due to the SCADA system and the pressure transmitter's deadband for the east and west venturis using the root-mean-square method. The method results in an overall random uncertainty of ± 1.82 MGD or a relative random uncertainty, CV_r, of ±1.92 percent (i.e., ±1.82MGD divided by 95 MGD). This process was repeated for each of the 24-hour readings taken during the day. The results are provided in Table 7 (table combining random and bias).

(3) Combining Systematic and Random Errors

The systematic and random errors can be combined using the following methodology:

$$S_b = \sum_{i=1}^{l_1}\sum_{j=1}^{m} S_{b_{ij\ \text{direction known}}} \pm \left[\sum_{i=1}^{l_2}\sum_{j=1}^{m} S^2_{b_{ij\ \text{direction unknown}}} + \sum_{i=1}^{l_3}\left(\sum_{j=1}^{m} S_{b_{ij\ \text{unknown but in same direction}}}\right)^2 + \sum_{i=1}^{l_4}\sum_{j=1}^{m} S^2_{r_{ij}}\right]^{\frac{1}{2}} \quad \textit{Equation (9)}$$

Where:

S_{rij}	=	Absolute random uncertainty
l_4	=	The number of uncertainty components in S_{rij}

Using *Equation (9)*, the overall uncertainty of the sum of the two flow measurements made in the first hour of September 1, 1998, is -0.475 ± 4.280 MGD, or -0.50 ± 4.50 percent.

This process is repeated for each of the 24-hour readings taken during the day and the results can be seen in Table 7. The average uncertainty, *CV*, of an hourly flow measurement performed on September 1 was -0.50 ± 5.29 percent. This implies that the 95 percent confidence interval, *CI*, for an hourly flow measurement would be -0.50 ± 10.95 percent (-0.50 ± [5.29 times 2.069]). Over the entire study period, the average uncertainty of an hourly flow measurement, *CV*, was found to be -0.50 ± 18.01 percent. The average 95 percent confidence interval of an hourly flow measurement, *CI*, would then be equal to -0.50 ± 35.30 percent (-0.50 ± [18.01 times 1.960]).

Note that the average uncertainty over the entire study period is considerably higher than the average uncertainty for September 1, 1998. This is due to considerably less flow being pumped through the east and west venturis during the February and March study periods. These lower flows and their corresponding low differential pressures cause greater errors because the error for flow, as calculated in Equation 4, is determined by dividing the uncertainty for the measured differential pressure by the resulting differential pressure produced for that hour at a given flow. Therefore, the lower the differential pressure, the greater the error.

Table 7
Systematic, Random, and Overall Uncertainty Estimates for Hourly Flow Measurements Made on September 1, 1998

Hour	Total Flow (MGD)	CV_b (%)	S_b (MGD)	CV_r (%)	S_r (MGD)	Overall CV (%)
1	95	-0.50 ± 4.08	-0.475 ± 3.88	± 1.91	± 1.82	-0.50 ± 4.50
2	95	-0.50 ± 4.08	-0.475 ± 3.88	± 1.91	± 1.82	-0.50 ± 4.50
3	95	-0.50 ± 4.08	-0.475 ± 3.88	± 1.91	± 1.82	-0.50 ± 4.50
4	91	-0.50 ± 4.43	-0.455 ± 4.04	± 2.00	± 1.82	-0.50 ± 4.86
5	95	-0.50 ± 4.08	-0.475 ± 3.88	± 1.91	± 1.82	-0.50 ± 4.50
6	97	-0.50 ± 3.92	-0.485 ± 3.80	± 1.87	± 1.82	-0.50 ± 4.34
7	92	-0.50 ± 4.34	-0.460 ± 3.99	± 1.97	± 1.82	-0.50 ± 4.77
8	91	-0.50 ± 4.43	-0.455 ± 4.04	± 2.00	± 1.82	-0.50 ± 4.86
9	85	-0.50 ± 5.07	-0.425 ± 4.31	± 2.14	± 1.82	-0.50 ± 5.50
10	83	-0.50 ± 5.31	-0.415 ± 4.40	± 2.19	± 1.82	-0.50 ± 5.74
11	83	-0.50 ± 5.31	-0.415 ± 4.40	± 2.19	± 1.82	-0.50 ± 5.74
12	81	-0.50 ± 5.57	-0.405 ± 4.51	± 2.24	± 1.82	-0.50 ± 6.00
13	81	-0.50 ± 5.57	-0.405 ± 4.51	± 2.24	± 1.82	-0.50 ± 6.00
14	81	-0.50 ± 5.57	-0.405 ± 4.51	± 2.24	± 1.82	-0.50 ± 6.00
15	82	-0.50 ± 5.43	-0.410 ± 4.46	± 2.21	± 1.82	-0.50 ± 5.87
16	82	-0.50 ± 5.43	-0.410 ± 4.46	± 2.21	± 1.82	-0.50 ± 5.87
17	83	-0.50 ± 5.31	-0.415 ± 4.40	± 2.19	± 1.82	-0.50 ± 5.74
18	85	-0.50 ± 5.07	-0.425 ± 4.31	± 2.14	± 1.82	-0.50 ± 5.50
19	92	-0.50 ± 4.34	-0.460 ± 3.99	± 1.97	± 1.82	-0.50 ± 4.77
20	86	-0.50 ± 4.95	-0.430 ± 4.26	± 2.11	± 1.82	-0.50 ± 5.38
21	83	-0.50 ± 5.31	-0.415 ± 4.40	± 2.19	± 1.82	-0.50 ± 5.74
22	85	-0.50 ± 5.07	-0.425 ± 4.31	± 2.14	± 1.82	-0.50 ± 5.50
23	82	-0.50 ± 5.43	-0.410 ± 4.46	± 2.21	± 1.82	-0.50 ± 5.87
24	90	-0.50 ± 4.53	-0.450 ± 4.08	± 2.02	± 1.82	-0.50 ± 4.96

B. Uncertainty of Daily Volume Measurements

An estimate of the uncertainty of the daily volume pumped through the station can be obtained from the 24 hourly flow measurements. The volume pumped through the Lakeview Station is the average of the 24 hourly flow measurements times 1 day. For September 1, 1998, the average volume pumped through the station is 87.3 million gallons (MG).

The uncertainty of the systematic daily volume measurements can be determined using the following equation:

$$CV_{Vb} = CV_{bV_{\substack{direction\\known}}} + \frac{\Delta t}{m_v}\left(\sum_{k=1}^{n} Q_k^2 CV^2_{b_{k_{\substack{direction\\unknown}}}} + \left(\sum_{k=1}^{n} Q_k CV_{b_{k_{\substack{unknown\\but\ in\ same\\direction}}}}\right)^2\right)^{\frac{1}{2}} \qquad \textit{Equation (10)}$$

Where:

CV_{Vb}	=	Relative uncertainty of the total bias volume measurement
$CV_{bV\ direction\ known}$	=	Bias with known direction of the total volume measurement
$CV_{bk\ direction\ unknown}$	=	Bias error in individual flow measurement *k* where the bias direction is unknown
$CV_{bk\ unknown\ but\ in\ same\ direction}$	=	Bias error in individual flow measurement *k* where the bias direction is unknown, but in the same direction for all meters
Δt	=	Time increment
Q_k	=	Value of flow measurement *k*
m_V	=	Sum of all *n* volume measurements

Using *Equation (10)*, the relative systematic error, CV_{Vb}, was -0.50 ± 4.76 percent for September 1, 1998.

The average random uncertainty component for the daily volume can be obtained from the following expression:

$$CV_{Vr} = \pm \frac{\Delta t}{m_v}\left(\sum_{k=1}^{n} Q_k^2 CV_{rk}^2\right)^{\frac{1}{2}} \qquad \textit{Equation (11)}$$

Where:

CV_{rk}	=	Random error in individual flow measurement *k*
CV_{Vr}	=	Relative uncertainty of the volume measurement

Using *Equation (11)*, the relative random uncertainty of the daily volume, CV_{vr}, for September 1, 1998, is 0.42 percent.

The overall uncertainty of the daily volume can then be found by combining the systematic and random uncertainty components in the following manner:

$$CV_V = CV_{bV_{\substack{direction\\known}}} + \frac{\Delta t}{m_v}\left(\sum_{k=1}^{n} Q_k^2 CV_{b_{k_{\substack{direction\\unknown}}}}^2 + \left(\sum_{k=1}^{n} Q_k CV_{b_{k_{\substack{unknown\\but\ in\ same\\direction}}}}\right)^2 + \sum_{k=1}^{n} Q_k^2 CV_{r_k}^2\right)^{\frac{1}{2}} \qquad \textit{Equation (12)}$$

For the date in question, the overall uncertainty of the daily volume, CV_V, was found to be -0.50 ± 4.78 percent, or -0.437 ± 4.17 MG (-0.50 ± 4.78 percent times 87.3 MG). The 95-percent confidence interval on the daily volume, CI_v, would then be -0.50 ± 9.89 percent (-0.50 ± [4.78 times 2.069]). Note that the 95-percent confidence interval for the daily volume (-0.50 ± 9.89 percent) is narrower than the 95-percent confidence interval for the average hourly flow measurement (-0.50 ±10.95 percent) on September 1, 1998. This is because the random errors and systematic errors with unknown direction associated with an hourly flow measurement are statistically canceled when they are summed over a day's time. The average random, systematic, and overall uncertainty for each day in each 2-week study period were found using the above method. A summary of the daily volume uncertainties for the September 1998 study period appears in Table 8.

Table 8
Estimated Uncertainties for Daily Volumes in September 1998 Study Period

Date	CV_{Vb} (%)	CV_{Vr} (%)	CV_V (%)	CI_V (%)
September 1	-0.50 ± 4.76	± 0.42	-0.50 ± 4.78	-0.50 ± 9.88
September 2	-0.50 ± 4.70	± 0.42	-0.50 ± 4.72	-0.50 ± 9.76
September 3	-0.50 ± 4.79	± 0.43	-0.50 ± 4.81	-0.50 ± 9.94
September 4	-0.50 ± 4.78	± 0.43	-0.50 ± 4.80	-0.50 ± 9.93
September 5	-0.50 ± 4.47	± 0.41	-0.50 ± 4.49	-0.50 ± 9.29
September 6	-0.50 ± 4.34	± 0.41	-0.50 ± 4.36	-0.50 ± 9.01
September 7	-0.50 ± 4.67	± 0.42	-0.50 ± 4.69	-0.50 ± 9.70
September 8	-0.50 ± 4.98	± 0.43	-0.50 ± 5.00	-0.50 ± 10.34
September 9	-0.50 ± 5.07	± 0.45	-0.50 ± 5.09	-0.50 ± 10.53
September 10	-0.50 ± 20.06	± 0.99	-0.50 ± 20.08	-0.50 ± 41.55
September 11	-0.50 ± 8.38	± 0.62	-0.50 ± 8.40	-0.50 ± 17.38
September 12	-0.50 ± 9.45	± 0.67	-0.50 ± 9.48	-0.50 ± 19.61
September 13	-0.50 ± 8.54	± 0.66	-0.50 ± 8.57	-0.50 ± 17.73
September 14	-0.50 ± 21.15	± 1.02	-0.50 ± 21.17	-0.50 ± 43.80

C. Uncertainty of Annual Volume Measurements

The uncertainty in the annual volume pumped through the station can be estimated using the estimated uncertainty in daily volume measurements. As mentioned earlier, the study period consisted of 2-week periods in September 1998, and February and May of 1999. In total, there were 42 days in the study period. Over this time period, the average systematic uncertainty for a daily volume measurement, CV_b, was determined to be -0.50 ± 18.43 percent (± 0.45 percent from unknown biases and ± 18.42 percent from unknown biases known to be in the same direction for all meters) and the average random uncertainty for a daily volume measurement, CV_r, was estimated to be ± 0.95 percent. The average uncertainty in daily volume would then be-0.50 ± 18.45 percent, and the average 95-percent confidence interval for the daily volume would be -0.50 ± 38.17 percent.

The uncertainty in the annual volume pumped through the Lakeview Station, CV_V can be determined as follows:

$$CV_V = CV_{bV_{\substack{direction \\ known}}} \pm \frac{\Delta t}{m_v}\left(\sum_{i=1}^{n} Q_i^2 CV^2_{bi_{\substack{direction \\ unknown}}} + \left(\sum_{i=1}^{n} Q_i^2 CV^2_{bi_{\substack{unknown \\ but\ in\ same \\ direction}}}\right)^2 + \sum_{i=1}^{n} Q_i^2 CV_{ri}^2\right)^{\frac{1}{2}} \quad \textit{Equation (13)}^2$$

$$= -0.50 \pm 13.85\%$$

The 95-percent confidence interval of the annual volume, CI_v, would then simply be -0.50 ± 27.15 percent (-0.50 ±[13.85 times 1.960]). The 95-percent confidence interval for the annual volume (-0.50 ± 27.15 percent) is less than the 95-percent confidence interval for the daily volume (-0.50 ± 38.17 percent). Most of the random error and unknown bias error associated with the daily volume measurement is statistically canceled when determining the uncertainty of the annual volume.

[2] Note that this calculation is based on Equation (9) rather than Equation (13) from the *Technical Review of Lake Michigan Water Withdrawal by the City of Evanston* report because the hourly flows from September 1998 are significantly higher than those in February and May 1999 which makes Equation (13) invalid. See *Technical Review of Lake Michigan Water Withdrawal by the City of Evanston* for additional information.

4. Quality Assurance

If the water accounting system is moved to the lakefront, there is a concern that if one of the direct diverter's flow measurement systems goes down, that there would be no way to measure the withdrawals from the lake. Thus, it is desirable that the direct diverters have a backup measurement system and, if possible, some other independent check on the measurements to ensure that the measurements are reasonable and accurate.

The Lakeview Station's set up, which differs from most of the City's other stations, causes it to have less backup and redundancy. Since water is normally pumped through both the east and west venturis, a problem with either meter or its pressure transmitter could cause flow data to be lost. Unlike many of the other City of Chicago stations, flow can not be diverted to another pump/meter system while the east or west venturi is being repaired.

The SCADA system used to totalize the flow consists of several elements. A schematic of the SCADA system showing the flow and storage of data is provided in Appendix B. The signal from each pressure transmitter is sent to a computer (CP2), located at the plant, where the flow data is displayed, processed and temporally stored. This computer is only capable of storing three days worth of data. Therefore, the control center computer system (CP3) located at the Jardine water treatment plant reads the data from the CP2 and is responsible for storing and maintaining the flow records. Note that if CP2 were to fail, the data would not be communicated to CP3. The CP3 central control computer system consists of two computers with automatic failover such that if one computer fails, the other one takes over automatically. Both of these computers store data from the pumping station so none of the data should be lost in the event that either computer fails. The data stored on CP3 is also backed up on tape.

The data is transferred from the CP2 computer at the plant to the CP3 computer at Jardine over a dedicated communication line (i.e. a telephone line). This communication line does not have a backup. However, since the CP2 at the station can store up to three days of data, no data will be lost if the line is repaired within three days.

If the SCADA system were to fail, there are no backup recorders or manometers at the station to record the flow data. Thus, the Lakeview Station does not have this additional level of backup that the stations do. Also, it is desirable to have an independent check on the flow measurement system employed by the Lakeview Station. The steam-operated stations can use the chart recorders as an independent check, however, the Lakeview Station does not have chart recorders, and thus there is no easily identifiable independent check on the flow measurement system.

5. Summary of Inadequacies in the Current Metering Systems

A summary of the inadequacies of the current metering system is as follows:

- The east and west venturi meters are oversized for the flows passing through the meters. At lower flows passing through the meters, the differential pressure is below 2 inches of water. As shown in the sample calculations, low flows cause high errors since the error is calculated by dividing the uncertainty of the differential pressure by the resulting differential pressure produced for that hour at a given flow.

- Since the meters are oversized for the application, the actual uncertainties of the venturi meters may be higher than the value used in the analysis.

- The actual venturi meters are not calibrated. Rather, the City assumes that the manufacturer's rating curves are correct. Calibration of the venturis would confirm or deny this assumption.

- No backup data recorders exists. Therefore, should the SCADA system fail, all flow data at the Lakeview Station is lost. Further, without two data sources, any additional uncertainty due to the sampling accuracy cannot be determined.

- The overall accuracy in estimating the water supply pumpage is dependent upon many measurement and analysis functions. The documented technical review and much previous work were focused on the accuracy of the pumpage measurements in hardware (i.e., meters, calibrator, pressure transmitter, etc.) and software (SCADA, etc.). This analyses does not take into account procedural errors such as inconsistent data in water supply pumpage as a result of the reporting mechanism.

6. Recommendations for Long-Term QA/QC and Improvements to Metering

Recommendations for long-term QA/QC and improvements to the metering are as follows:

- Ideally, the east and west venturi meters should be replaced with meters that are designed to measure the station's typical flow range. If this is not feasible, more accurate methods of measuring the low differential pressures should be evaluated and installed. A calibrator with a full scale value closer to the actual differential pressure produced by the meter should also be used to improve accuracy.

- Calibration of the venturi meters to determine if the manufacturer's rating curves are valid.

- Occasional inspection and measurement, if physically possible, of the inlet and throat of the venturi meters to determine any possible presence and effects of corrosion and tuberculation on the meter's accuracy.

- Installation of a backup recording devices.

- Routine auditing of various water withdrawal reports, as part of the long-term QA/QC, as a means of accounting for procedural errors.

7. Conclusions

Some of the important conclusions are summarized below:

- The east and west meters are oversized for this application causing error values to be significantly high.

- For operational purposes, the City can determine the hourly flow measurement reading to within -0.50 ± 35.30 percent at the Lakeview Station. This value takes into account the random and systematic uncertainty associated with the venturi meters, pressure transmitters, calibration equipment, and recording system.

- On an annual basis, the total volume pumped through the station can be determined to with -0.50 ± 27.15 percent. The 95-confidence interval for the annual volume is narrower than the 95-percent confidence interval for the hourly flow measurements made at the Lakeview Station because the random and unknown bias errors associated with the measurement are statistically canceled when the measurements are summed over 1 year's time.

- The Lakeview plant does not have backup or redundancy with the exception of the SCADA system which collects and stores data on multiple computers. Even so, should the SCADA fail, there is no backup data recorders. There are no backup pump/meter systems should the east and west venturis fail.

- There is no independent check of the flow measurement system that can be used as an indicator when there is a problem within the system.

8. References

American Society of Mechanical Engineers, *Fluid Meters: Their Theory and Application.* ASME, New York, 6th ed., 1971.

Ametek Power Instruments, "Rochester DPG-700 Precision Digital Pressure Gauge," http://www.rochester.com/Products/RIS/dgp-700.htm.

Analog Input Module PPX:505-6108A Electrical Specification [for the SCADA system], Date not provided.

International Organization for Standardization, *Measurements of Fluid Flows by Means of Pressure Differential Devices*, ISO, Switzerland, 1991.

Mead & Hunt, Inc., *Technical Review of Lake Michigan Water Withdrawal by the City of Evanston–Draft*, July 2002.

Mead & Hunt, Inc., *Technical Review of Lake Michigan Withdrawals – Southwest Pumping Station*, July 2002.

Meriam Instrument, *General Installation, Operation and Maintenance Instructions for Meriam Manometers*, April 1992.

Miller, Richard W., *Flow Measurement Engineering Handbook*, McGraw-Hill, New York, 1996.

Spitzer, David W., *Industrial Flow Measurement.* Instrument Society of America, North Carolina, 1990.

Written Correspondence between Mr. R. W. Pence of the City of Chicago and David Clemmans of Energy Associates Inc. regarding the "BIF Flow Metering Equipment", August 18, 1977.

Yokogawa Electric Corporation, *Instruction Manual–UNIΔ MarkII Electronic Differential Pressure Transmitters*, 3rd Edition, Date not provided.

Final Report

Technical Review of Lake Michigan Withdrawals Lexington Pumping Station

City of Chicago

Prepared for:

U.S. Army Corps of Engineers – Chicago District
Chicago, Illinois

Prepared by:

MEAD & HUNT

June 2003

Table of Contents

Page

Executive Summary . . . . . E-i

1. General Description 1
   A. Summary of Operation 1
   B. Flow Measurement 1
   C. Flow Totalization 2
   D. Calibration 2

2. Uncertainty in Metering and Measurement Components 4
   A. Venturi-Type Meters 4
   B. Pressure Taps 4
   C. Meter Installation 4
   D. Sampling 6
   E. Pressure Differential Measurement 7
   F. Dry Calibration of Pressure Transmitters 8
   G. SCADA System 8

3. Sample Uncertainty Calculation for Effluent Meters 9
   A. Uncertainty of Hourly Flow Measurements 9
      (1) Systematic (Bias) Error 9
      (2) Random Error 16
      (3) Combining Systematic and Random Errors 16
   B. Uncertainty of Daily Volume Measurements 18
   C. Uncertainty of Annual Volume Measurements 20

4. Quality Assurance 22

5. Summary of Inadequacies in the Current Metering Systems 23

6. Recommendations for Long-Term QA/QC and Improvements to Metering 24

7. Conclusions 25

References 26

List of Tables

Table		Page
1	Flow Measurement Devices Used at the Lexington Station	2
2	Upstream Disturbances and Approximate Approach Lengths at the Various Venturi Meters at the Lexington Station	5
3	Summary of Required and Actual Downstream Straight Pipe Lengths at the Lexington Station	6
4	Results of the Random Complete Block Design Comparisons for the Mayfair, Central Park, Roseland, Springfield and Western Pumping Stations	6
5	Summary of Flow Characteristics for the First Hourly Reading on September 1, 1998	11
6	Uncertainty From the Pressure Transmitters and Calibration Equipment for the First Hourly Reading on September 1, 1998 for the South and North Venturis	12
7	Absolute Bias Estimates for the First Hourly Readings Taken on September 1, 1998	14
8	Systematic, Random and Overall Uncertainty Estimates for Hourly Flow Measurements Made on September 1, 1998	17
9	Estimated Uncertainties for Daily Volumes in September 1998 Study Period	20

List of Appendices

Appendix

A Schematic of Lexington Station

B Schematic of the SCADA System

Executive Summary

Currently, diversion of water from Lake Michigan for the state of Illinois is measured at the Chicago Sanitary and Ship Canal at Romeoville. The Great Lakes Mediation Memorandum of Understanding established a lakefront diversion accounting system and specified a three-year transition period to assess the technical acceptability of moving the diversion measurement system to the lakefront. A lakefront diversion accounting system requires metering of all domestic water withdrawals from Lake Michigan and the direct diversions into the Chicago Sanitary and Ship Canal system at the Chicago River, the Calumet River, and the North Shore Channel at Wilmette. During the three-year transition period, the U.S. Army Corps of Engineers (USACE) has been tasked to initiate a technical review of the accuracy of the reported domestic withdrawals from Lake Michigan.

The USACE retained Mead & Hunt, Inc. to evaluate the accuracy of domestic withdrawals from Lake Michigan. A total of 12 pumping stations in the city of Chicago (City) and six suburban pumping stations will be evaluated. These evaluations include revisions to the investigations conducted on the City's Mayfair and Thomas Jefferson Stations and the city of Evanston's Station by the Illinois District of the U.S. Geological Survey. This report presents a summary of the flow measurement techniques at the Lexington Station as employed by the City, as well as estimates of the uncertainty of daily and annual volume measurements. Presently, the Lexington Station consists of eight electrically operated pumps and three venturi-type meters.

To obtain an estimate of the uncertainty of an individual flow measurement, we examined the manufacturer's accuracy specifications for both the primary flow measurement devices (i.e., the venturi-type meters) and secondary measurement devices (i.e., the pressure transducers). The Lexington Station's calibration technique, sampling technique, and device installation were also examined. All of the sources of uncertainty identified from this analysis were then classified as either random or systematic in nature. Using this information and the data logs provided by the City, we obtained an estimate of the uncertainty of an individual flow measurement. From this information, an estimate of the uncertainty of the daily and annual volume withdrawn from the lake can be obtained using standard statistical techniques.

Some of the important conclusions are summarized below:

- For operational purposes, the City can determine the hourly flow measurement reading to within -0.50 ± 7.70 percent at the Lexington Station. This value takes into account the random and systematic uncertainty associated with the venturi meters, pressure transmitters, calibration equipment, and recording system.

- On an annual basis, the total volume pumped through the station can be determined to with -0.50 ± 0.63 percent. The 95-confidence interval for the annual volume is narrower than the 95-percent confidence interval for the hourly flow measurements made at the Lexington Station because the random and unknown bias errors associated with the measurement are statistically canceled when the measurements are summed over one year's time.

- There is some form of backup system for all the measurements made at the Lexington Station. No loss of flow data is likely under most conditions.

- The digital totalizer system at the Lexington Station can be used as a check on the flow measurement system. The difference between the chart recorders and the daily log sheets should be less than 2 percent. A difference greater than 2 percent indicates there may be a problem within the flow measurement system.

Technical Review of
Lake Michigan Withdrawals
Lexington Pumping Station
City of Chicago

1. General Description

A. Summary of Operation

The Lexington Pumping Station is an electrically operated station consisting of eight high lift pumps and three venturi-type meters. Under normal operating conditions, the water pumped through the Lexington Pumping Station is metered using two meters (i.e. the north and south station discharge venturis). However, the station does have the ability to pump a portion of the water back into Chicago's water distribution system through a third meter if the need arises. This occurrence has only happened two or three times since the plant was started up in 1992 and will not be considered in this analysis. The north and south meters are used under normal operating conditions to pump the water to the DuPage Water Commission. One or both of these venturi's may be used at one time. The pressure differentials on the meters are measured using Foxboro pressure transmitters. The output signals from the pressure transmitters are sent to the Supervisory Control and Data Acquisition (SCADA) system. The SCADA system is the primary recording device and samples the pressure transmitter signals every minute. These 1-minute readings are then used to determine the average daily volume pumped through any given venturi meter. The plant has flow indicators, totalizers and manometers that can be used as a backup recording system to the SCADA. A schematic of the Lexington Station is provided in Appendix A.

B. Flow Measurement

The Lexington Station uses three venturi-type meters to measure the flow pumped through the station. Both meters were installed between 1990. Specifications of the two venturi-type meters are shown in Table 1.[1] The manufacturer rates the flow capacity of each meter as 125.3 MGD with a corresponding maximum differential pressure of 235.5 inches of water. However, the City has set up the metering system to have a maximum flow of 200 MGD through each meter with a corresponding differential pressure of 600.2 inches of water. This decision allows for higher than normal flows in case of emergency situations.

---

[1] The coefficient of discharge was calculated using Equation (1) of this report and the β-Ratio, venturi diameter, maximum flow and maximum differential pressure that was provided by the City of Chicago.

Table 1
Flow Measurement Devices Used at the Lexington Station

Manufacturer	Leopold
Model	SFH
Approach Pipe Diameter (in.)	48
Throat Diameter (in.)	30.4
β-Ratio	0.6340
Coefficient of Discharge	0.9891
Maximum Flow Rate (MGD)	125.28
Maximum Differential Pressure (in. Water)	235.5

C. Flow Totalization

At the Lexington Station, flow can be totalized using one of two different methods. The SCADA system is the primary flow totalization system. First, the output from the pressure transmitters is sent to the SCADA system. The SCADA system samples the output every minute. The pressure transmitters' signal is divided by an integrator constant to convert it to a volume measurement. The sum of the 1,440 1-minute readings is then used to determine the volume pumped through the system on a daily basis.

The pressure transmitter's signal is also sent to the station flow indicators and digital flow totalizer. This equipment is used as a backup system to the SCADA system. The flow indicator provides a real-time indication of the pumpage. All data is recorded hourly on the station logs.

D. Calibration

An effective calibration procedure should calibrate both the primary flow meter and its secondary measurement device. First, the secondary measurement device, such as a pressure transmitter, should be calibrated to make sure it is reading correctly. Then, the flow meter itself should be calibrated to make sure it is functioning properly. The City does not perform any wet calibrations on the primary flow meters or their secondary measurement devices. Thus, all of the City's calibrations can be considered inferential in nature. The pressure transmitters are dry calibrated once a month. If the City notices a problem or discrepancy, the transmitter is replaced with a new transmitter. The totalizers at the station are calibrated every 6 months. When a pressure transmitter or totalizer is calibrated, a full dry calibration is performed using a Model 1090 Pressure Flexitester with Diaphragm Isolated transducer module. This pressure gauge provides a "calibrated" differential pressure that can be used to determine

if the pressure transmitter or totalizer is reading properly. For the primary flow measurement devices, the City assumes the manufacturer's rating tables are correct.

The City also performs end-to-end calibrations of the Lexington pumping station. When an end-to-end calibration is performed, the venturi-type meters are connected to manometers in order to obtain the pressure differentials. After an hour has passed, the volume measure through totalization and conversion of the manometer readings is compared to the volume measured by the totalizer. The City wants the difference between these two readings to be less than 2% for both the totalizer and instantaneous readings. This type of calibration is done to ensure that all the secondary measurement devices are working together properly.

During the calibration, the City takes readings both from the Meriam manometers and from the calibrated flow signal over a period of time, typically at least one hour. The averages of both sets of data are compared and if a significant difference in readings is detected, the calibrators are sent out for re-calibration and re-certification. The last re-calibration was April 2000. Per the manometer's specifications, the "NIST recognizes the U-type Manometer as a primary standard due to its inherent accuracy and simplicity of operation." The manometers do not require calibration, therefore comparing the values from the calibrated flow signal to the manometer's readings is a reasonable method of checking whether the calibrators should be re-certified.

2. Uncertainty in Metering and Measurement Components

A. Venturi-Type Meters

According to manufacturer specifications, the two Leopold venturis have an uncertainty of ±0.5 percent of the actual rate. Since these meters are relatively new, it is assumed that no additional uncertainty due to corrosion or pitting exists.

The manufacturer rates the flow capacity of each meter as 125.3 MGD with a corresponding maximum differential pressure of 235.5 inches of water. However, the City has set up the metering system to have a maximum flow of 200 MGD through each meter with a corresponding differential pressure of 600.2 inches of water. This decision allows for higher than normal flows in case of emergency situations.

B. Pressure Taps

The pressure taps that are used to measure the pressure differential should be square with no roughness, burrs, or wire edges (Miller, 1996). If the pressure taps that are used do not meet these requirements, then a bias error would be introduced. It was not practical to inspect the pressure taps of these meters. The flow measurement devices were all constructed under a controlled manufacturing environment with very little opportunity for a pressure tap to be constructed poorly. Thus, we assumed that the manufacturer constructed the pressure taps correctly and that no additional error would be introduced due to the pressure taps.

C. Meter Installation

An appropriate length of straight, circular pipe is required upstream of the flow meter to guarantee that the velocity profile entering the meter is not distorted and that the meter will perform properly. The length of this approach section depends on number and types of bends and fittings located upstream of the meter.

Table 2 lists the approximate approach length and upstream fittings for the various venturi meters located at the Lexington Pumping Station. The "Required Approach Length for Zero Error" and the "Required Approach Length for 0.5 Percent Error" values reported in Table 2 were taken from ISO 5167-1:1991.

As shown in Table 2, the north and south meter do not have the required minimum lengths for the first upstream length of pipe, but do have the required minimum lengths for the second upstream lengths of pipe. The north and south meters only have upstream lengths to the first fitting of 17.0 feet which falls between the required minimum length for zero error (38 feet) and the required minimum length for 0.5 percent error (6.0 feet).

ISO 5167-1:1991 reference materials only provide lengths for zero error and 0.5 percent error. Therefore, although in the instances described above fall between zero error and 0.5 percent error, the exact error value is unknown. Therefore, to be conservative, the north and south meters are assumed to have an additional 0.5 percent of error since their upstream piping does not meet the minimum upstream piping requirements.

The north and south meters both have a reducer for a first upstream disturbance which will cause a distorted flow profile with secondary flow but with little swirl at the venturi meter. No information was available for the bias direction for a distorted profile with secondary flow but with little swirl. Therefore, it is assumed that for this application the flows of a distorted flow profile without swirl will also be under-reported. Given this, the error will be -0.5 percent for both the north and south meters.

Table 2
Upstream Disturbances and
Approximate Approach Lengths for the
Various Venturi Meters at the Lexington Station

Venturi No.	First Upstream Fitting	First Upstream Approach Length (feet)	Required Pipe Length for Zero Error (feet)	Required Pipe Length for± 0.5% Error (feet)	Second Upstream Fitting	Second Upstream Approach Length (feet)	Required Pipe Length for Zero Error (feet)	Required Pipe Length for± 0.5% Error (feet)
North	Reducer	17.0	38.0	6.0	Valve	18.0	11.0	7.0
South	Reducer	17.0	38.0	6.0	Valve	18.7	11.0	7.0

Inadequate straight piping downstream of the meter can also affect the meter's accuracy. ISO 5167-1:1991 reference materials indicate that as long as the downstream length of straight piping exceeds four times the meter's throat diameter, no additional error is expected. Unlike for the upstream piping lengths, the ISO 5167-1:1991 reference does not indicate what length would be required to provide an uncertainty of 0.5 percent or any other uncertainty value. The required and actual downstream lengths of straight pipe is summarize in Table 3. In both cases, the downstream straight pipe lengths are not adequate to ensure no additional error due to downstream piping geometry. Although, downstream lengths of pipe for the north and south meter do not meet downstream piping requirement of four throat diameters, no error value is available in the ISO 5167-1:1991 reference. Therefore, although additional

error may be present due to the downstream piping, it cannot be quantified and included in the actual uncertainty calculations.

Table 3
Summary of Required and Actual Downstream Straight Pipe Lengths at the Lexington Station

Venturi	Throat Diameter (feet)	Required Downstream Pipe Length for Zero Error (feet)	Actual Downstream Pipe Length (feet)	Meets Required Downstream Pipe Length?
North	2.50	10.0	7.3	No
South	2.50	10.0	7.2	No

D. Sampling

Additional uncertainty can also be introduced due to how the flow measurement data is recorded. If, for example, a quantity varies sinusoidally, but that quantity is only measured at the times when the quantity is at a peak, then the average measurements will be higher than the true average. This would introduce a bias into the system. On the other hand, if a quantity is measured or sampled frequently, then there will be very little error introduced due to the sampling. The flow rates at the Lexington Station are sampled every minute, and these 1-minute sample readings are used to determine the average daily volume pumped through the station. The Lexington Station has a digital totalizer as a backup data recorder to the SCADA system. However, the digital totalizers records were not readily available. Thus, the Lexington Station's SCADA data alone is not sufficient to determine whether the 1-minute readings are adequate.

The Mayfair, Central Park, Roseland, Springfield and Western Pumping Stations all have average daily flows from chart recorder data to compare to their instantaneous 1-hour SCADA readings. A randomized complete block design was preformed on the data for these five stations and their results are provided in Table 4.

Table 4
Results of the Random Complete Block Design Comparisons for the Mayfair, Central Park, Roseland, Springfield and Western Pumping Stations

Station	Number Without Statistical Difference	Number With Statistical Difference
Central Park	2	4
Mayfair	25	3

Table 4
Results of the Random Complete Block Design Comparisons for the Mayfair, Central Park, Roseland, Springfield and Western Pumping Stations

Station	Number Without Statistical Difference	Number With Statistical Difference
Roseland	4	7
Springfield	5	1
Western	6	0

As shown in Table 4, the results are not consistent among the five stations tested. The results from the Mayfair, Springfield and Western Stations indicate that in more cases than not there is no statistical difference between averages. The opposite is true for the Central Park and Roseland Stations. However, the statistical comparison was between the average daily volume from the chart recorder and average of 24 one-hour instantaneous SCADA readings, since 1-minute SCADA readings were not available. The actual daily flow volume that is recorded for LMO reporting is based on 1-minute readings. Therefore, a possibility still exists that the chart recorder's daily average flow and the SCADA's daily flow based on 1 minute readings could be statistically the same.

It is assumed that sampling frequency does not produce an additional source of error at the Lexington Station since the combined results from the Mayfair, Central Park, Roseland, Springfield and Western Pumping Stations indicate that it is more likely than not that sampling frequency at the Lexington Station is adequate.

E. Pressure Differential Measurement

The pressure differential of the two venturi meters are measured using Foxboro IDP10 pressure transmitters. Based on conversations with technical support at Foxboro, it was determined that the significant uncertainty components for the Foxboro IDP10 transmitters include accuracy, stability and temperature effect. According to Foxboro, these IDP10-A22 pressure transmitters have an accuracy of ± 0.2 percent of the calibrated span, a stability of ± 0.2 percent upper range limit (URL) and a temperature effect of ± 0.125 percent of URL per 100 degrees F. The lake temperature varies from about 32 to 70 degrees F. This is approximately a 40-degree F temperature range. The calibrated span of both meters is 600.2 inches of water and the URL is 840 inches of water. It is assumed that the specifications provided by the manufacturer are correct. The combination of these errors is considered to be systematic in nature. The direction of this bias is unknown.

F. Dry Calibration of Pressure Transmitters

The secondary measurements devices (i.e., pressure transmitters, indicators) are calibrated using a Model 1090 Pressure Flexitester with Diaphragm Isolated Transducer Module. Because the pressure transmitter is adjusted to the calibrator's reading, all of the error components associated with the calibrator will become a bias reported by the Foxboro pressure transmitter. In conversations with the manufacturer, we determined that the calibrator has two separate accuracy components, one for the Model 1090 Pressure Flexitester and one for the Diaphragm Isolated Transfer Module. The Flexitester's accuracy is ±0.01 percent of the actual pressure reading and the Module's accuracy is ±0.05 percent of full scale. For this accuracy value, full scale refers to the full scale of calibrator or 830 inches of water. Note, however, that the two parameters of the calibrator (accuracy of the pressure module and accuracy of the Diaphragm Isolated Transfer Module) may not be totally uncorrelated since the pressure transmitter converts a physical measurement, the pressure, into an electrical signal while the Diaphragm Isolated Transfer Module's output appears to be correlated to the pressure from the pressure module. Although, these parameters may not be totally uncorrelated, it was not accounted for in this analysis. The direction of these biases, although unknown, will be in the same direction for both the south and north meters in the Lexington Station.

G. SCADA System

In order for the SCADA system to determine the volume pumped through the Lexington Station, the analog signal from the pressure transmitter was converted to a digital signal using an analog input module. The manufacturer's specifications state that the analog to digital conversion is accurate to within ± 1.25 percent of full scale over operating range, and to within ± 0.7 percent of full scale at 25 degrees C. Since the water temperature varies from 32 to 70 degrees F, the uncertainty value of ± 1.25 percent of full scale over operating range will be used. In this case, the full scale was assumed to be the full scale of the venturi-type meter to which the pressure transmitter was connected. It is assumed that the SCADA system is set up such that the full scale flow rate is 200 MGD (i.e for emergency conditions) rather than the manufacturer capacity of 125.3 MGD. The error due to the analog to digital conversion is random in nature.

3. Sample Uncertainty Calculation for Effluent Meters

To demonstrate how the uncertainty of the measured volume pumped through the Lexington Station was estimated, a series of sample calculations follows. The method used to estimate the uncertainty is similar to that described in the *Technical Review of Lake Michigan Water Withdrawal by the City of Evanston*. Please refer to this document for background on the statistical handling of measurement uncertainty. The City provided the hourly logs of three, 2-week periods. These time periods were the first 14 days in September 1998, and February and May 1999. In reviewing the data, it was apparent that some hourly values were not constant over the entire hour. For example, if during a an hour block, the meter was pumping 60 MGD but only pumping half an hour, the average flow for that hour would be one-half the pumped flow, or 30 MGD. Using the 30 MGD would incorrectly cause the metering uncertainty to be greater because 30 MGD is significantly less than the optimum flow range of the metering system. Therefore, any data points that appeared not to be constant flow over then entire hour were changed to zero. It was assumed that the Lexington Station's pumpages over these time periods were representative of the typical pumpages. The uncertainty of the hourly and daily readings can be obtained using these assumptions. The uncertainties can be reported as the standard deviation of the measurements (expressed by the variable *s*) or in relative terms (expressed by the variable *CV*, which is the standard deviation of the measurements divided by the mean of the measurements).

A. Uncertainty of Hourly Flow Measurements

(1) Systematic (Bias) Error

The majority of the error components are systematic in nature. These systematic errors include error from the venturi, inadequate approach length, the pressure transmitters, and the calibration equipment. To determine the uncertainty of the hourly flow measurements, all uncertainties need to be in terms of percent accuracy of actual rate. The errors associated with the venturi and the inadequate approach lengths are already expressed in these terms. However, the accuracy associated with the pressure transmitters and calibration equipment are in terms of percent accuracy per calibrated span, upper range limit (URL), full scale (FS), or actual pressure reading.

The standard equation for the flow through a venturi-type meter is:

$$Q = \frac{C_d A_t}{\sqrt{1-\beta^4}} \sqrt{2g\Delta h} \qquad \textit{Equation (1)}$$

Where:

Q	=	Flow rate.
C_d	=	Discharge coefficient.
A_t	=	Area of the throat section.
β	=	Ratio of the throat diameter to the approach section diameter (also referred to as the beta-ratio).
g	=	Acceleration due to gravity.
Δh	=	Pressure differential across the meter.

Based on manufacturer information, the C_d value for both the south and north venturi meters is 0.9891.

Note that the model assumes that the discharge coefficient, throat area, and throat to approach diameter ratio (i.e., β-ratio) introduce no errors to the discharge calculations. That is, the differential pressure head of the venturi meter is the only source of error or uncertainty.

For illustration of the uncertainty calculations, we will be examining the pumping characteristics for September 1, 1998. On this day, water was pumped through both the south and north venturi meters.

The throat area, A_t, for both the south and north venturi is:

$$A_t = \frac{\Pi\left(30.432\,in\right)^2}{4} = 727.4in^2 = 5.051ft^2 \qquad \textit{Equation (2)}$$

For the first hour on September 1, 1998, 101.9 million gallons per day (MGD) and 50.9 MGD were flowing through the south and north meters, respectively. The pressure differential for south venturi is calculated below using Equation (1), and the β-ratio of 0.6340 from Table 1.

$$\Delta h = \left[\frac{Q\sqrt{1-\beta^4}}{C_d A_t \sqrt{2g}}\right]^2 = 12\left[\frac{1.547(101.9MGD)\sqrt{1-(0.6340)^4}}{(0.9891)(5.051ft^2)\sqrt{2(32.16ft/s^2)}}\right]^2 = 155.74in. \qquad \textit{Equation (3)}$$

The values of 12 and 1.547 that appear in *Equation (3)* are unit conversion factors to convert feet to inches and MGD to cubic feet per second (cfs), respectively. A summary of flow characteristics for the first hourly reading of the two venturi-type meters on September 1 appears in Table 5.

Table 5
Summary of Flow Characteristics for the First Hourly Reading on September 1, 1998

Venturi No.	Throat Area (sq. ft.)	Flow Rate (MGD)	Pressure Differential (in. Water)
South	5.051	101.9	155.74
North	5.051	50.9	38.86

The pressure differential of the two venturi meters are measured using Foxboro IDP10 pressure transmitters. According to Foxboro, these IDP10-A22 pressure transmitters have an accuracy of ± 0.2 percent of the calibrated span, a stability of ± 0.2 percent upper range limit (URL) and a temperature effect of ± 0.125 percent of URL per 100 degrees F. The calibrated span of both meters is 600.2 inches of water and the URL is 840 inches of water. Thus, the uncertainty in the pressure differential measurement due to accuracy would be ± 1.200 inches of water (i.e., ± 0.002 times 600.2) for both the south and north venturis. The uncertainty in the flow rate due to the accuracy of the pressure transmitter for south venturi would then be:

$$CV_{Qa} = \frac{Xs_p}{\Delta h} = \frac{(0.5)(\pm 1.200in)}{155.74in} = \pm 0.385\% \qquad \textit{Equation (4)}$$

Where:

CV_{Qa} = Uncertainty in the flow rate due to the accuracy of the pressure transmitter.

s_p = Uncertainty in the pressure transmitter (due to transmitter accuracy in this case).

X = Sensitivity coefficient equal to 0.5 for the pressure transducer as the flow is directly proportional to the square root of the pressure differential in Equation (1).

Δh = Pressure differential.

See *Technical Review of Lake Michigan Water Withdrawals by the City of Evanston* for additional information on the sensitivity coefficient, *X*. The uncertainties in the flow rate due to the transmitter's accuracy, stability, and temperature affect for the south and north meters are shown in Table 6.

The pressure transmitters are calibrated using a Model 1090 Pressure Flexitester with Diaphragm Isolated Transducer Module. In conversations with the manufacturer, we determined that the calibrator has two separate accuracy components, one for the Model 1090 Pressure Flexitester and one for the Diaphragm Isolated Transfer Module.

The Flexitester's accuracy is ±0.01% of the actual pressure reading. This can be converted to an accuracy based on percent of the flow reading by multiplying ±0.01% by the sensitivity coefficient equal to 0.5 for the module as the flow is directly proportional to the square root of the pressure differential in Equation (1). Doing so results in an uncertainty of 0.005 percent of flow rate for the Model 1090 Pressure Flexitester

The Diaphragm Isolated Transfer Module's accuracy is ±0.05 percent of full scale. For Module's accuracy value, full scale refers to the full scale of calibrator or 830 inches of water. Thus, the uncertainty in the pressure component of the calibrator's module would be ± 0.415 inches of water (i.e., ± 0.0005 times 830) for the south and north meters. The uncertainty in the flow rate due to pressure component of the calibrator for the south meter would then be:

$$CV_{Qa} = \frac{Xs_p}{\Delta h} = \frac{(0.5)(\pm 0.415in)}{155.74in} = \pm 0.133\% \qquad \textit{Equation (5)}$$

This process was repeated for north meter's Diaphragm Isolated Transfer Module's accuracy. A summary of these estimates appears in Table 6.

Table No. 6
Uncertainty From the Pressure Transmitters and Calibration Equipment for the First Hourly Reading on September 1, 1998 for the South and North Venturis

Venturi	Instrument	Uncertainty Source	CV for Δh or ΔmA	URL, FS or Calibrated Span	Uncertainty for Δh or ΔmA	CV for Flow (%)
South	Foxboro	Pressure Transmitter	0.2 % of calib. span	600.2 in. Water	1.200 in. Water	0.385
South	Foxboro	Pressure Transmitter	0.2 % of URL	840 in. Water	1.680 in. Water	0.539

Table No. 6
Uncertainty From the Pressure Transmitters and Calibration Equipment for the First Hourly Reading on September 1, 1998 for the South and North Venturis

Venturi	Instrument	Uncertainty Source	CV for Δh or ΔmA	URL, FS or Calibrated Span	Uncertainty for Δh or ΔmA	CV for Flow (%)
South	Foxboro	Pressure Transmitter	0.125 % URL/100°F	840 in. Water	0.420 in. Water	0.135
South	Pressure Flexitester	Calibrator	NA	NA	NA	0.005
South	Diaphragm Isolated Transfer Module	Calibrator	0.05% FS	830 in. Water	0.415 in. Water	0.133
North	Foxboro	Pressure Transmitter	0.2 % of calib. span	600.2 in. Water	1.200 in. Water	1.544
North	Foxboro	Pressure Transmitter	0.2 % of URL	840 in. Water	1.680 in. Water	2.162
North	Foxboro	Pressure Transmitter	0.125 % URL/100°F	840 in. Water	0.420 in. Water	0.540
North	Pressure Flexitester	Calibrator	NA	NA	NA	0.005
North	Diaphragm Isolated Transfer Module	Calibrator	0.05% FS	830 in. Water	0.415 in. Water	5.340

In this study, the bias uncertainty estimates will be broken down into three categories:

- Bias uncertainty with a known bias direction.
- Bias uncertainty with an unknown bias, but known to be in the same direction for each meter.
- Bias uncertainty with an unknown bias direction.

Explanation of this breakdown was detailed in *Technical Review of Lake Michigan Water Withdrawal by the City of Evanston*. Table 7 lists the type of bias uncertainty for each of the bias estimates for the first hourly readings for south and north venturis. Additionally, Table 7 also

provides the absolute bias estimates for the first hourly readings taken from south and north venturis based on the following equation:

$$s_b = CV_{flow} \cdot Q_{\substack{first \\ hour}} = (0.00385)(101.9\,MGD) = 0.392\,MGD \qquad \textit{Equation (6)}$$

Where:

S_b is the standard deviation (or absolute uncertainty) of the flow measurement due to the respective systematic uncertainty estimate.

CV_{flow} is the relative uncertainty in the flow rate.

$Q_{first\ hour}$ is the flow for the first hour.

Table 7
Absolute Bias Estimates for the First Hourly Readings Taken on September 1, 1998

Venturi	Bias Component	Type of Bias	CV_b(%)	S_b (MGD)
South	Venturi	Direction unknown	± 0.500	± 0.510
	Approach lengths	Direction known	- 0.500	- 0.510
	Pressure transmitters			
	– Accuracy	Direction unknown	± 0.385	± 0.392
	– Stability	Direction unknown	± 0.539	± 0.549
	– Temperature	Direction unknown	± 0.135	± 0.138
	Calibrator			
	– Pressure Flexitester	Direction unknown,	± 0.005	± 0.005
	– Diaphragm Isolated Transfer Module	but in same direction for all meters	± 0.133	± 0.135
North	Venturi	Direction unknown	± 0.500	± 0.255
	Approach lengths	Direction known	-0.500	- 0.255
	Pressure transmitters			
	– Accuracy	Direction unknown	± 1.544	± 0.786
	– Stability	Direction unknown	± 2.162	± 1.100
	– Temperature	Direction unknown	± 0.540	± 0.275

Table 7
Absolute Bias Estimates for the First Hourly Readings Taken on September 1, 1998

Venturi	Bias Component	Type of Bias	CV_b(%)	S_b (MGD)
	Calibrator			
	– Pressure Flexitester	Direction unknown,	± 0.005	± 0.003
	– Diaphragm Isolated	but in same	± 5.340	± 2.718
	Transfer Module	direction for all		
		meters		

The systematic uncertainty estimates for the south and north meters can be combined as shown below in *Equation (7)* to determine the overall hourly systematic uncertainty for September 1, 1998. To determine the uncertainty of the sum of the three measurements, the individual uncertainty estimates should be combined on the basis of absolute uncertainty (i.e., standard deviations) and not relative uncertainty (i.e., coefficient of variation).

$$S_b = \sum_{i=1}^{l_1}\sum_{j=1}^{m} S_{b_{ij\ \text{direction known}}} \pm \left[\sum_{i=1}^{l_2}\sum_{j=1}^{m} S^2_{b_{ij\ \text{direction unknown}}} + \sum_{i=1}^{l_3}\left(\sum_{j=1}^{m} S_{b_{ij\ \text{unknown but in same direction}}}\right)^2\right]^{\frac{1}{2}} \qquad \textit{Equation (7)}$$

Where:

S_b = Combined uncertainty or standard deviation of the flow measurement.

$S_{bij\ direction\ known}$ = Absolute bias uncertainty of known direction for measurement *i,j*.

$S_{bij\ unknown\ but\ in\ same\ direction}$ = Absolute bias uncertainty of unknown direction but known to occur in the same direction for each meter for measurement *i,j*

$S_{bij\ direction\ unknown}$ = Absolute bias uncertainty of unknown direction for measurement *i,j* .

m = The number of meters.

l_1, l_2, l_3 = The number of uncertainty components in $S_{bij\ direction\ known}$, $S_{bij\ direction\ unknown}$, and $S_{bij\ unknown\ but\ in\ same\ direction}$, respectively.

For the first hour, using *Equation (7)*, the overall absolute bias uncertainty, S_b, was found to be -0.764 ± 1.694 MGD, which corresponds to a relative uncertainty, CV_b, of -0.500 ± 1.110 percent (i.e., -0.764 ± 1.694 MGD divided by the total flow rate of 152.8 MGD). This process was repeated for each of the 24-hour readings taken during the day. The results are provided in Table 8 (table combining random and bias).

(2) Random Error

Only the SCADA uncertainty was identified as being random in nature. The manufacturer states that the analog-to-digital conversion can take place with an uncertainty of ± 1.25 percent of full scale. As mentioned earlier, it was assumed that full scale refers to full scale of the venturi-type meter. Thus, for each of the south and north meters with a maximum flow rate of ± 200 MGD, the absolute random uncertainty due to the SCADA system would be ± 2.50 MGD (± 0.0125 times 200 MGD). Hence, the relative uncertainty estimate for the SCADA system would be ± 2.45 percent (i.e., ± 2.50 MGD divided by 101.9 MGD) for the south meter and ± 4.91 percent (i.e., ± 2.50 MGD divided by 50.9 MGD) for the north meter.

The overall absolute random uncertainty can be determined by combining the absolute random uncertainties due to the SCADA system for the south and north meters using the root-mean-square method. The method results in an overall absolute random uncertainty of ± 3.54 MGD or a relative random uncertainty, CV_r, of ± 2.32 percent (i.e., ±3.54 MGD divided by 152.8 MGD). This process was repeated for each of the 24-hour readings taken during the day. The results are provided in Table 8 (table combining random and bias).

(3) Combining Systematic and Random Errors

The systematic and random errors can be combined using the following methodology:

$$S_b = \sum_{i=1}^{l_1}\sum_{j=1}^{m} S_{b_{ij\,\text{direction known}}} \pm \left[\sum_{i=1}^{l_2}\sum_{j=1}^{m} S^2_{b_{ij\,\text{direction unknown}}} + \sum_{i=1}^{l_3}\left(\sum_{j=1}^{m} S_{b_{ij\,\text{unknown but in same direction}}}\right)^2 + \sum_{i=1}^{l_4}\sum_{j=1}^{m} S^2_{r_{ij}}\right]^{\frac{1}{2}} \qquad \textit{Equation (8)}$$

Where:

S_{rij} = Absolute random uncertainty.

l_4 = The number of uncertainty components in S_{rij}.

Using *Equation (8)*, the overall uncertainty of the sum of the two flow measurements made in the first hour of September 1, 1998, is -0.764 ± 3.92 MGD, or -0.50 ± 2.57 percent.

This process is repeated for each of the 24-hour readings taken during the day and the results can be seen in Table 8. The average uncertainty, *CV*, of an hourly flow measurement performed on September 1 was -0.50 ± 3.99 percent. This implies that the 95 percent confidence interval, *CI*, for an hourly flow measurement would be -0.50 ± 8.26 percent (-0.50 ±[3.99 times 2.069]). Over the entire study period, the average uncertainty of an hourly flow measurement, *CV*, was found to be -0.50 ± 3.93 percent. The average 95 percent confidence interval of an hourly flow measurement, *CI*, would then be equal to -0.50 ± 7.70 percent (-0.50 ±[3.93 times 1.960]).

Table 8
Systematic, Random, and Overall Uncertainty Estimates for Hourly Flow Measurements Made on September 1, 1998

Hour	Total Flow (MGD)	CV_b (%)	S_b (MGD)	CV_r (%)	S_r (MGD)	Overall *CV* (%)
1	152.8	-0.50 ± 1.11	-0.76 ± 1.69	± 2.32	± 3.54	-0.50 ± 2.57
2	152.7	-0.50 ± 1.11	-0.76 ± 1.70	± 2.32	± 3.54	-0.50 ± 2.57
3	152.7	-0.50 ± 1.11	-0.76 ± 1.70	± 2.32	± 3.54	-0.50 ± 2.57
4	152.1	-0.50 ± 1.10	-0.76 ± 1.68	± 2.32	± 3.54	-0.50 ± 2.57
5	110.6	-0.50 ± 1.72	-0.55 ± 1.91	± 3.20	± 3.54	-0.50 ± 3.63
6	110.2	-0.50 ± 1.73	-0.55 ± 1.91	± 3.21	± 3.54	-0.50 ± 3.65
7	56.1	-0.50 ± 2.33	-0.28 ± 1.31	± 4.46	± 2.50	-0.50 ± 5.03
8	57.5	-0.50 ± 2.22	-0.29 ± 1.28	± 4.35	± 2.50	-0.50 ± 4.88
9	57.5	-0.50 ± 2.22	-0.29 ± 1.28	± 4.35	± 2.50	-0.50 ± 4.88
10	57.5	-0.50 ± 2.22	-0.29 ± 1.28	± 4.35	± 2.50	-0.50 ± 4.88
11	57.5	-0.50 ± 2.22	-0.29 ± 1.28	± 4.35	± 2.50	-0.50 ± 4.88
12	57.6	-0.50 ± 2.22	-0.29 ± 1.28	± 4.34	± 2.50	-0.50 ± 4.87
13	57.5	-0.50 ± 2.22	-0.29 ± 1.28	± 4.35	± 2.50	-0.50 ± 4.88
14	57.5	-0.50 ± 2.22	-0.29 ± 1.28	± 4.35	± 2.50	-0.50 ± 4.88
15	57.6	-0.50 ± 2.22	-0.29 ± 1.28	± 4.34	± 2.50	-0.50 ± 4.87
16	55.9	-0.50 ± 2.35	-0.28 ± 1.31	± 4.47	± 2.50	-0.50 ± 5.05
17	109.8	-0.50 ± 1.75	-0.55 ± 1.92	± 3.22	± 3.54	-0.50 ± 3.66
18	109.6	-0.50 ± 1.75	-0.55 ± 1.92	± 3.23	± 3.54	-0.50 ± 3.67

Table 8
Systematic, Random, and Overall Uncertainty Estimates for Hourly Flow Measurements Made on September 1, 1998

Hour	Total Flow (MGD)	CV_b (%)	S_b (MGD)	CV_r (%)	S_r (MGD)	Overall CV (%)
19	109.2	-0.50 ± 1.77	-0.55 ± 1.93	± 3.24	± 3.54	-0.50 ± 3.69
20	109.6	-0.50 ± 1.75	-0.55 ± 1.92	± 3.23	± 3.54	-0.50 ± 3.67
21	110.1	0.50 ± 1.74	-0.55 ± 1.91	± 3.21	± 3.54	-0.50 ± 3.65
22	111.1	-0.50 ± 1.71	-0.56 ± 1.90	± 3.18	± 3.54	-0.50 ± 3.61
23	111.0	-0.50 ± 1.71	-0.56 ± 1.90	± 3.19	± 3.54	-0.50 ± 3.62
24	111.0	-0.50 ± 1.71	-0.56 ± 1.90	± 3.19	± 3.54	-0.50 ± 3.62

B. Uncertainty of Daily Volume Measurements

An estimate of the uncertainty of the daily volume pumped through the station can be obtained from the 24 hourly flow measurements. The volume pumped through the Lexington Station is the average of the 24 hourly flow measurements times 1 day. For September 1, 1998, the average volume pumped through the station is 95.2 million gallons (MG).

The uncertainty of the systematic daily volume measurements can be determined using the following equation:

$$CV_{Vb} = CV_{bV_{\substack{direction \\ known}}} + \frac{\Delta t}{m_v}\left(\sum_{k=1}^{n} Q_k^2 CV^2_{b_{k_{\substack{direction \\ unknown}}}} + \left(\sum_{k=1}^{n} Q_k CV_{b_{k_{\substack{unknown \\ but\ in\ same \\ direction}}}}}\right)^2\right)^{\frac{1}{2}} \qquad \textit{Equation (9)}$$

Where:

CV_{Vb}	=	Relative uncertainty of the total bias volume measurement.
$CV_{bV\ direction\ known}$	=	Bias with known direction of the total volume measurement.
$CV_{bk\ direction\ unknown}$	=	Bias error in individual flow measurement *k* where the bias direction is unknown.
$CV_{bk\ unknown\ but\ in\ same\ direction}$	=	Bias error in individual flow measurement *k* where the bias direction is unknown, but in the same direction for all meters.

Δt	=	Time increment.
Q_k	=	Value of flow measurement *k*.
m_V	=	Sum of all *n* volume measurements. In this case, the uncertainty of the measured volume can be expressed in relative terms because the terms Q_k and m_V take into account the magnitude of the individual measurements.

Using *Equation (9)*, the relative systematic error, CV_{Vb}, was -0.50 ± 0.52 percent for September 1, 1998.

The average random uncertainty component for the daily volume can be obtained from the following expression:

$$CV_{Vr} = \pm \frac{\Delta t}{m_v}\left(\sum_{k=1}^{n} Q_k^2 CV_{rk}^2\right)^{\frac{1}{2}} \qquad \textit{Equation (10)}$$

Where:

CV_{rk}	=	Random error in individual flow measurement *k*.
CV_{Vr}	=	Relative uncertainty of the volume measurement.

Using *Equation (10)*, the relative random uncertainty of the daily volume, CV_{vr}, for September 1, 1998, is ± 0.67 percent.

The overall uncertainty of the daily volume can then be found by combining the systematic and random uncertainty components in the following manner:

$$CV_V = CV_{bV_{\substack{direction\\known}}} + \frac{\Delta t}{m_v}\left(\sum_{k=1}^{n} Q_k^2 CV_{b_{k_{\substack{direction\\unknown}}}}^2 + \left(\sum_{k=1}^{n} Q_k CV_{b_{k_{\substack{unknown\\but\ in\ same\\direction}}}}\right)^2 + \sum_{k=1}^{n} Q_k^2 CV_{r_k}^2\right)^{\frac{1}{2}} \qquad \textit{Equation (11)}$$

For the date in question, the overall uncertainty of the daily volume, CV_V, was found to be -0.50 ± 0.85 percent, or -0.48 ± 0.78 MG (-0.50± 0.85 percent times 95.2 MG). The 95-percent confidence interval on the daily volume, CI_v, would then be -0.50 ± 1.76 percent (-0.50 ±[0.85 times 2.069]). Note that the 95-percent confidence interval for the daily volume (-0.50 ± 1.76 percent) is much narrower than the 95-percent confidence interval for the average hourly flow measurement (-0.50 ± 8.26 percent) for September 1, 1998. This is because the random errors and systematic errors with unknown direction associated with an hourly flow measurement are statistically canceled when they are summed over a day's time. The average random, systematic, and overall uncertainty for each day in each 2-week study

period were found using the above method. A summary of the daily volume uncertainties for the September 1998 study period appears in Table 9.

Table 9
Estimated Uncertainties for Daily Volumes in September 1998 Study Period

Date	CV_{Vb} (%)	CV_{Vr} (%)	CV_V (%)	CI_V (%)
September 1	-0.50 ± 0.52	± 0.67	-0.50 ± 0.85	-0.50 ± 1.76
September 2	-0.50 ± 0.56	± 0.69	-0.50 ± 0.89	-0.50 ± 1.84
September 3	-0.50 ± 0.53	± 0.66	-0.50 ± 0.85	-0.50 ± 1.76
September 4	-0.50 ± 0.58	± 0.72	-0.50 ± 0.92	-0.50 ± 1.91
September 5	-0.50 ± 0.42	± 0.58	-0.50 ± 0.72	-0.50 ± 1.49
September 6	-0.50 ± 0.51	± 0.65	-0.50 ± 0.83	-0.50 ± 1.71
September 7	-0.50 ± 0.57	± 0.73	-0.50 ± 0.92	-0.50 ± 1.91
September 8	-0.50 ± 0.58	± 0.74	-0.50 ± 0.94	-0.50 ± 1.94
September 9	-0.50 ± 0.58	± 0.75	-0.50 ± 0.95	-0.50 ± 1.97
September 10	-0.50 ± 0.58	± 0.74	-0.50 ± 0.94	-0.50 ± 1.95
September 11	-0.50 ± 0.47	± 0.62	-0.50 ± 0.78	-0.50 ± 1.62
September 12	-0.50 ± 0.49	± 0.64	-0.50 ± 0.80	-0.50 ± 1.66
September 13	-0.50 ± 0.54	± 0.67	-0.50 ± 0.86	-0.50 ± 1.78
September 14	-0.50 ± 0.56	± 0.71	-0.50 ± 0.90	-0.50 ± 1.87

C. Uncertainty of Annual Volume Measurements

The uncertainty in the annual volume pumped through the station can be estimated using the estimated uncertainty in daily volume measurements. As mentioned earlier, the study period consisted of 2-week periods in September 1998, and February and May of 1999. In total, there were 42 days in the study period. Over this time period, the average systematic uncertainty for a daily volume measurement, CV_b, was determined to be -0.50 ± 0.45 percent (± 0.32 percent from unknown biases and ± 0.32 percent from unknown biases known to be in the same direction for all meters) and the average random uncertainty for a daily volume measurement, CV_r, was estimated to be ± 0.67 percent. The average uncertainty in daily volume would then be -0.50 ± 0.81 percent, and the average 95-percent confidence interval for the daily volume would be -0.50 ± 1.68 percent. The uncertainty in the annual volume pumped through the Lexington Station, CV_V can be determined as follows:

$$CV_V = CV_{b_{\substack{direction \\ known}}} \pm \left(\frac{CV^2_{b_{\substack{direction \\ unknown}}}}{n} + CV^2_{b_{\substack{unknown \\ but\ in\ same \\ direction}}} + \frac{CV_r^2}{n} \right)^{\frac{1}{2}}$$

$$= -0.50 \pm \left(\frac{0.32^2}{365} + 0.32^2 + \frac{0.67^2}{365} \right)^{\frac{1}{2}} = -0.50 \pm 0.32\%$$

Equation (12)

The 95-percent confidence interval of the annual volume, CI_v, would then simply be -0.50 ± 0.63 percent (-0.50 ±[0.32 time 1.960]). The 95-percent confidence interval for the annual volume (-0.50 ± 0.63 percent) is significantly less than the average 95-percent confidence interval for the daily volume (-0.50 ± 1.68 percent). Most of the random error and unknown bias error associated with the daily volume measurement is statistically canceled when determining the uncertainty of the annual volume.

5. Summary of Inadequacies in the Current Metering Systems

For the most part, the current metering system provided a reasonable level of accuracy and has acceptable quality assurance. The following portion of the metering system appears to be deficient.

- The actual venturi meters are not calibrated. Rather, the City assumes that the manufacturer's rating curves are correct. Calibration of the venturis would confirm or deny this assumption.

- There are no backup pump/meter systems should the south or north venturi fail

- The overall accuracy in estimating the water supply pumpage is dependent upon many measurement and analysis functions. The documented technical review and much previous work were focused on the accuracy of the pumpage measurements in hardware (i.e., meters, calibrator, pressure transmitter, etc.) and software (SCADA, etc.). This analyses does not take into account procedural errors such as inconsistent data in water supply pumpage as a result of the reporting mechanism.

6. Recommendations for Long-Term QA/QC and Improvements to Metering

Recommendations for long-term QA/QC and improvements to metering are as follows:

- Calibration of the venturi meters to determine if the manufacturer's rating curves are valid.

- The venturi meters are relatively new so corrosion and tuberculation are not likely to be a major concern at this time. However, as the meters age, occasional inspection and measurement, if physically possible, of the inlet and throat of the venturi meters to determine any possible presence of corrosion and tuberculation and their effects on the meter's accuracy is recommended.

- Routine auditing of various water withdrawal reports, as part of the long-term QA/QC, as a means of accounting for procedural errors.

7. Conclusions

Some of the important conclusions are summarized below:

- For operational purposes, the City can determine the hourly flow measurement reading to within -0.50 ± 7.70 percent at the Lexington Station. This value takes into account the random and systematic uncertainty associated with the venturi meters, pressure transmitters, calibration equipment, and recording system.

- On an annual basis, the total volume pumped through the station can be determined to with -0.50 ± 0.63 percent. The 95-confidence interval for the annual volume is narrower than the 95-percent confidence interval for the hourly flow measurements made at the Lexington Station because the random and unknown bias errors associated with the measurement are statistically canceled when the measurements are summed over one year's time.

- There is some form of backup system for all the measurements made at the Lexington Station. No loss of flow data is likely under most conditions.

- The digital totalizer system at the Lexington Station can be used as a check on the flow measurement system. The difference between the chart recorders and the daily log sheets should be less than 2 percent. A difference greater than 2 percent indicates there may be a problem within the flow measurement system.

References

American Society of Mechanical Engineers, *Fluid Meters: Their Theory and Application*. ASME, New York, 6th ed., 1971.

Analog Input Module PPX:505-6108A Electrical Specification [for the SCADA system], date not provided.

International Organization for Standardization, *Measurements of Fluid Flows by Means of Pressure Differential Devices*, ISO, Switzerland, 1991.

Lang, Ken. Written correspondence between Ken Lang of A. J. Lowe & Son, Inc. and Thomas W. Rittle of F.B. Leopold Company regarding the "Dupage County Pump Station–Your P.O. No. 99932–Leopold Contract No. 89-2604-S," April 16, 1990.

Mead & Hunt, Inc., *Technical Review of Lake Michigan Water Withdrawal by the City of Evanston–Draft*, July 2002.

Mead & Hunt, Inc., *Technical Review of Lake Michigan Withdrawals – Southwest Pumping Station*, July 2002.

Meriam Instrument, *General Installation, Operation and Maintenance Instructions for Meriam Manometers*, April 1992.

Miller, Richard W., *Flow Measurement Engineering Handbook*, McGraw-Hill, New York, 1996.

Spitzer, David W., *Industrial Flow Measurement*. Instrument Society of America, North Carolina, 1990.

Transmation, Inc. Telephone conversation between Technical Support at the Transmation, Inc. and Nicole Grossen of Mead & Hunt, Inc. regarding the accuracies of the Diaphragm Isolated Module and Model 1090 Pressure Flexitester, March 5, 2001.

Final Report

Technical Review of Lake Michigan Withdrawals Mayfair Pumping Station

City of Chicago

Prepared for:

U.S. Army Corps of Engineers – Chicago District
Chicago, Illinois

Prepared by:

MEAD & HUNT

August 2003

Table of Contents

Page

Executive Summary . . . . . E-i

1. General Description 1
   A. Summary of Operation 1
   B. Flow Measurement 1
   C. Flow Totalization 2
   D. Calibration 2

2. Uncertainty in Metering and Measurement Components 4
   A. Venturi-Type Meters 4
   B. Pressure Taps 4
   C. Meter Installation 5
   D. Sampling 7
   E. Pressure Differential Measurement 8
   F. Dry Calibration of Pressure Transmitters 9
   G. SCADA System 10

3. Sample Uncertainty Calculation for Effluent Meters 11
   A. Uncertainty of Hourly Flow Measurements 11
      (1) Systematic (Bias) Error 11
      (2) Random Error 17
      (3) Combining Systematic and Random Errors 18
   B. Uncertainty of Daily Volume Measurements 19
   C. Uncertainty of Annual Volume Measurements 22

4. Quality Assurance 23

5. Summary of Inadequacies in the Current Metering Systems 24

6. Recommendations for Long-Term QA/QC and Improvements to Metering 25

7. Conclusions 26

8. References 27

List of Tables

Table		Page
1	Flow Measurement Devices Used at the Mayfair Station	2
2	Upstream Disturbances and Approximate Approach Lengths for the Various Venturi Meters at the Central Park Station	6
3	Summary of Required and Actual Downstream Straight Pipe Lengths at Central Park Station	7
4	Results of statistical analysis done to determine if there is a significant difference between the chart recorders and the sum of the 24-hour instantaneous flow measurements	8
5	URL for various pressure transmitters	9
6	Summary of Flow Characteristics for the First Hourly Reading on February 1, 1995	13
7	Uncertainty from the Pressure Transmitters and Calibration Equipment for the First Hourly Reading on February 1, 1995, for Meter Nos. 3, 4, and 6	14
8	Absolute Bias Estimates for the First Hourly Readings Taken on February 1, 1995	15
9	Systematic, Random, and Overall Uncertainty Estimates for Hourly Flow Measurements Made on February 1, 1995	18
10	Estimated Uncertainties for Daily Volumes in February 1995 Study Period	21

List of Appendices

Appendix

A Schematic of the Mayfair Station

B Schematic of the SCADA System

Executive Summary

Currently, diversion of water from Lake Michigan for the state of Illinois is measured at the Chicago Sanitary and Ship Canal at Romeoville. The Great Lakes Mediation Memorandum of Understanding established a lakefront diversion accounting system and specified a three year transition period to assess the technical acceptability of moving the diversion measurement system to the lakefront. A lakefront diversion accounting system requires metering of all domestic water withdrawals from Lake Michigan and the direct diversions into the Chicago Sanitary and Ship Canal system at the Chicago River, the Calumet River, and the North Shore Channel at Wilmette. During the three year transition period, the U.S. Army Corps of Engineers (USACE) has been tasked to initiate a technical review of the accuracy of the reported domestic withdrawals from Lake Michigan.

The USACE retained Mead & Hunt, Inc., to evaluate the accuracy of domestic withdrawals from Lake Michigan. A total of 12 pumping stations in the city of Chicago (City) and six suburban pumping stations will be evaluated. These evaluations include revisions to the investigations conducted on the City's Mayfair and Thomas Jefferson Stations and the city of Evanston's Station by the Illinois District of the U.S. Geological Survey. This report presents a summary of the flow measurement techniques at the Mayfair Station as employed by the City, as well as estimates of the uncertainty of daily and annual volume measurements. Presently, the Mayfair Pumping Station consists of seven steam-operated pumps and six venturi-type meters. There is a manifold system at this station that can route the water pumped from any given pump through any given venturi-type meter.

To obtain an estimate of the uncertainty of an individual flow measurement, we examined the manufacturer's accuracy specifications for both the primary flow measurement devices (i.e., the venturi-type meters) and secondary measurement devices (i.e., the pressure transmitters). The Mayfair Station's calibration technique, sampling technique, and device installation were also examined. All of the sources of uncertainty identified from this analysis were then classified as either random or systematic in nature. Using this information and the data logs provided by the City, we obtained an estimate of the uncertainty of an individual flow measurement. From this information, an estimate of the uncertainty of the daily and annual volume withdrawn from the lake can be obtained using standard statistical techniques.

Some of the important conclusions are summarized below:

- For operational purposes, the city of Chicago can determine an hourly flow measurement reading to within about -0.26 ± 4.21 percent. This takes into account the random and systematic uncertainty associated with the venturi-type meters, the pressure transmitters, and the calibration unit.

- On an annual basis, the total volume pumped through the station can be determined to within approximately -0.26 ± 1.74 percent. The 95-percent confidence interval for the annual volume is narrower than the 95-percent confidence interval for the hourly flow measurements because much of

the random and unknown bias errors associated with a measurement are statistically canceled when the measurements are summed over a year's time.

- There is some sort of backup system for all the measurements made at the Mayfair Pumping Station. There should be no loss in flow data under most conditions.

- The chart recorders in the Mayfair Pumping Station can be used as a check on the flow measurement system. The difference between the chart recorders and the daily log sheets should be less than 2 percent. A difference greater than 2 percent indicates that there may be a problem with the flow measurement system.

Technical Review of
Lake Michigan Withdrawals
Mayfair Pumping Station

City of Chicago

1. General Description

A. Summary of Operation

The Mayfair Pumping Station consists of seven steam-operated pumps and six venturi-type meters. There is a manifold system at this station that can route the water pumped from any given pump through any given venturi-type meter. The pressure differentials on these venturi-type meters are measured using Johnson Yokogawa pressure transmitters. The output signal from these pressure transmitters is transmitted to both the Supervisory Control and Data Acquisition (SCADA) system and to the Eurotherm Chessell chart recorders for totalization. The SCADA system samples the pressure transmitter signal every five minutes. These five-minute readings are then used to determine the average daily volume pumped through any given venturi-type meter. The chart recorders are used as a backup to the SCADA system. These recorders provide a 24-hour record of the pumpage for each venturi-type meter as well as instantaneous flow indication and totalization figures. A schematic of the Mayfair Station is provided in Appendix A.

B. Flow Measurement

As mentioned earlier, the Mayfair Pumping Station uses six venturi-type meters to measure the flow pumped through the station.[1] Four of these meters are Pratt venturi nozzles that were installed in 1992 while the remaining two are BIF flow tubes that were installed in 1954. These flow measurement devices are both proprietary variations of the classical Herschel-type venturi meter. Specifications of the six venturi-type meters are shown in Table 1.[2]

---

[1] The previous *Technical Review of Lake Michigan Water Withdrawals by the Mayfair Pumping Station in the City of Chicago* report (December 1998), prepared by the U.S. Water Conservation Laboratory, reported these six meters as having characteristics similar to a Dall flow tubes and based these meter's uncertainties on reported uncertainties of Dall flow tubes. However, based on the coefficient of discharge values reported in Table 1, these values differ significantly from the typical value of 0.7 for Dall flow tubes (Miner, 1956). Given these findings, the uncertainty of the these meters where changed in this analysis.

[2] The coefficient of discharge was calculated using Equation (1) of this report and the beta-ratio, venturi diameter, maximum flow and maximum differential pressure that was provided by the City of Chicago.

Table 1
Flow Measurement Devices Used at the Mayfair Station

Meter No.	Manu-facturer	Model No.	Approach Pipe Diameter (in.)	Throat Diameter (in.)	β-Ratio	Coefficient of Discharge	Max. Flow Rate (MGD)	Max. Differential Pressure (in. of Water)
1	Pratt	SX23	54	32.9	0.6092	0.9858	120	163.83
2	Pratt	SX23	42	25.5	0.6059	0.9858	70	156.21
3	Pratt	SX23	42	25.5	0.6059	0.9858	70	156.21
4	Pratt	SX23	54	32.9	0.6092	0.9858	120	163.83
5	BIF	VTS4A	48	27.4	0.5715	0.9857	130	412.00
6	BIF	VTS4A	48	27.4	0.5715	0.9857	130	412.00

C. Flow Totalization

At the Mayfair Pumping Station, flow is totalized using two different methods. First, the output from the pressure transmitter is sent to the SCADA system. The SCADA system samples the output from the pressure transmitters every five minutes. The pressure transmitter signal is divided by an integrator constant to convert it to a volume measurement. The sum of the 288 five-minute readings is then used to determine the volume pumped through the system on a daily basis.[3]

The pressure transmitter signal is also sent to the chart recorders. These chart recorders are used as a backup to the SCADA system. The chart recorders provide a 24-hour graphical record of the pumpage for each venturi-type meter. Instantaneous estimates of the flow rate and the total volume are also provided by the chart recorders.

D. Calibration

An effective calibration procedure should calibrate both the primary flow meter and its secondary measurement device. First, the secondary measurement device, such as a pressure transmitter, should

[3] Note that the City of Chicago's Mayfair plant has five-minute readings whereas other City of Chicago Stations have one-minute readings. The Mayfair station's data was taking from February, May, July, and September of 1995 and 1997 (as presented in previous Technical Review of Lake Michigan Water Withdrawals by the Mayfair Pumping Station in the City of Chicago by the U.S. Water Conservation Laboratory) while other station's data was taken from September 1998, and February, and May 1999. It appears that the City of Chicago has increased the sampling from every five minutes to every minute sometime between these two time periods.

be calibrated to make sure it is reading correctly. Then, the flow meter itself should be calibrated to make sure it is functioning properly. The city of Chicago does not perform any wet calibrations on the primary flow meters or their secondary measurement devices. Thus, all of the city of Chicago's calibrations can be considered inferential in nature. The secondary measurement devices (i.e., the pressure transmitters, totalizers, etc.) are dry calibrated once a year. If the city of Chicago notices a problem or discrepancy, the instruments are checked and calibrated within one to two working days. When a pressure transmitter or totalizer is calibrated, a full dry calibration is performed using a Rochester DPG-700 pressure gauge. This pressure gauge provides a "calibrated" differential pressure that can be used to determine if the pressure transmitter or totalizer is reading properly. For the primary flow measurement devices, the city of Chicago assumes the manufacturers' rating tables are correct.

After all the individual instruments have been dry calibrated, the city of Chicago performs an end-to-end calibration of the pumping station. When an end-to-end calibration is performed, the venturi-type meters are connected to manometers in order to obtain the pressure differentials. After an hour has passed, the volume measured by the manometer readings is compared to the volume measured by the totalizer. The city of Chicago wants the difference between these two readings to be less than 2 percent for both the totalizer and instantaneous readings. This type of calibration is done to ensure that all the secondary measurement devices are working together properly.

During the calibration, the City takes readings both from Meriam manometers and from the calibrated flow signal over a period of time, typically at least one hour. The averages of both sets of data are compared and if a significant difference in readings is detected, the calibrators are sent out for re-calibration and re-certification. The last re-calibration was April 2000. Per the manometer's specifications, the "NIST recognizes the U-type Manometer as a primary standard due to its inherent accuracy and simplicity of operation." The manometers do not require calibration, therefore comparing the values from the calibrated flow signal to the manometer's readings is a reasonable method of checking whether the calibrators should be re-certified.

2. Uncertainty in Metering and Measurement Components

A. Venturi-Type Meters

The manufacturer's specifications indicate that the BIF flow tubes have an uncertainty of ± 0.75 percent of actual flow rate under dry calibration conditions. This error is systematic in nature with an unknown bias direction. The City has not inspected any of the meters at the Mayfair Station. However, the City did inspect a BIF flow meter at their Southwest Station. The throat of the BIF meter at the Southwest Station was lined with bronze, a material known for its ability to resist corrosion and formation of tubercles. This fact supported the results presented in the *Technical Review of Lake Michigan–Southwest Pumping Station* report which indicated there was no significant error due to corrosion or tuberculation of the meter. Whether the BIF meters at the Mayfair station have bronze-lined throats is unknown.

No additional information on the uncertainty for the Pratt flow tubes was available. Therefore, it was assumed that the Pratt flow tubes have characteristics that are similar to the Dall flow tubes and thus an accuracy of ± 0.75 percent. Most of the other venturi-type meters used in the various City of Chicago stations have bronze throat liners.

Therefore, it is assumed that the Mayfair stations's BIF flow meters also have bronze throat liners and, thus, any error due to corrosion and tuberculation for the BIF flow meters is insignificant at the Mayfair Station.

Based on technical specifications, the Pratt flow tubes have an uncertainty of ±0.75 percent of actual flow rate. Since the Pratt flow tubes were installed in 1992, it is assumed that minimal wear, corrosion or tuberculation has occurred. Therefore, no additional error due to wear, corrosion and tuberculation will be added to the uncertainty of the Pratt flow tubes. The uncertainty of the venturi-type meters is systematic in nature with an unknown bias direction.

B. Pressure Taps

The pressure taps that are used to measure the pressure differential should be square with no roughness, burrs, or wire edges (Miller, 1996). If this were not the case, then a bias error would be introduced due to the pressure taps. It was not practical to inspect the pressure taps of these meters. These flow measurement devices were all constructed under a controlled manufacturing environment with very little opportunity for a pressure tap to be constructed poorly. Thus, it was assumed that the manufacturer constructed the pressure taps correctly and that no additional error would be introduced due to the pressure taps.

C. Meter Installation

An appropriate length of straight, circular pipe is required upstream of the flow meter to guarantee that the velocity profile entering the meter is not distorted and that the meter will perform properly. The length of this approach section depends on number and types of bends and fittings located upstream of the meter.

Table 2 lists the approximate approach length and upstream fittings for the various venturi meters located at the Central Park Pumping Station. The "Required Approach Length for Zero Error" and the "Required Approach Length for 0.5 Percent Error" values reported in Table 2 were taken from ISO 5167-1:1991.

As shown in Table 2, Meter Nos. 1, 3, 5, and 6 have the required minimum lengths for the first two upstream lengths of pipe. Although Meter No. 2 does meet the minimum length to the first upstream fitting requirements, it does not meet the minimum length to the second upstream fitting requirements. Meter No. 4 does not meet the minimum pipe length requirements for either the first or second upstream lengths of pipe. For Meter No. 4, in both cases, the actual pipe length falls between the minimum pipe length for zero error and the minimum pipe length for 0.5 percent error.

ISO 5167-1:1991 reference materials only provide lengths for zero error and 0.5 percent error. Therefore, although in some instances described above the actual pipe lengths are significantly less than the required minimum length for a 0.5 percent error, the exact error value is unknown. Similarly, some pipe lengths fall between the minimum requirements for zero error and 0.5 percent error. The actual error value in this situation is also unknown. Therefore, to be conservative, 0.5 percent error will be assumed in these instances. Given these assumptions, Meter Nos. 2 and 4 are assumed to have an additional 0.5 percent error and 1.0 percent error (0.5 percent for each inadequate upstream length of pipe), respectively, since their upstream piping does not meet the minimum upstream piping requirements.

For Meter No. 4, there are two bends occurring in different planes which will cause a distorted flow profile with a significant amount of swirl. Miller reported that if a swirl was produced at the venturi meter, the flows tend to be under-reported. Therefore, for Meter No. 4, the additional error due to inadequate upstream piping will be -1.0 percent. Since there are not multiple abrupt changes in the plane of flow in Meter No. 2's upstream piping, the flow profile will be distorted, but will have little swirl at meter. No information was available for the bias direction for a distorted profile with little swirl. Therefore, it is assumed that for this application the flows of a distorted flow profile without swirl will also be under-reported. Given this, the errors for meter No. 2 will be -0.5 percent.

Table 2
Upstream Disturbances and
Approximate Approach Lengths for the
Various Venturi Meters at the Central Park Station

Venturi No.	First Upstream Fitting	First Upstream Approach Length (feet)	Required Pipe Length for Zero Error (feet)	Required Pipe Length for± 0.5% Error (feet)	Second Upstream Fitting	Second Upstream Approach Length (feet)	Required Pipe Length for Zero Error (feet)	Required Pipe Length for± 0.5% Error (feet)
1	Single bend	34.2	13.5	4.5	Valve	148.9	12.4	7.9
2	Tee connection[a]	65.3	10.5	3.5	Valve	~1.0 to 2.0[b]	9.6	6.1
3	Single bend	22.1	10.5	3.5	Tee connection[a]	~15.0[b]	7.0	3.5
4	Two bends in different planes	134.0	180.0	78.8	Valve	~8.0[b]	12.4	7.9
5	Single bend	10.5	10.0	2.0	Single bend	13.0	8.0	4.0
6	Single bend	11.0	10.0	2.0	Single bend	17.0	8.0	4.0

[a]For the tee connection, there was no information available on the upstream length requirements. Therefore, it was assumed that a tee connection had the same upstream piping requirements as a single bend.
[b]These values are estimated based on the plant schematics shown in Appendix A.

Inadequate straight piping downstream of the meter can also affect the meter's accuracy. ISO 5167-1:1991 reference materials indicate that as long as the downstream length of straight piping exceeds four times the meter's throat diameter, no additional error is expected. Unlike for the upstream piping lengths, the ISO 5167-1:1991 reference does not indicate what length would be required to provide an uncertainty of 0.5 percent or any other uncertainty value. The required and actual downstream lengths of straight pipe is summarize in Table 3. For meter Nos. 1, 2 and 3, the downstream straight pipe lengths are adequate to ensure no additional error due to downstream piping geometry. Meter Nos. 4, 5 and 6 do not have adequate downstream piping to ensure no additional error due to the downstream piping. Although, the downstream lengths for meter Nos. 4, 5 and 6 do not meet downstream piping requirement of 4 throat diameters, no error value is available in the ISO 5167-1:1991 reference. Therefore, although additional error may be present due to the downstream piping, it cannot be quantified and included in the actual uncertainty calculations.

Table 3
Summary of Required and Actual Downstream Straight Pipe Lengths at the Central Park Station

Venturi No.	Throat Diameter (feet)	Required Downstream Pipe Length for Zero Error (feet)	Actual Downstream Pipe Length (feet)	Meets Required Downstream Pipe Length?
1	2.8	13.4	11.0	Yes
2	2.1	8.5	8.5	Yes
3	2.1	25.3	8.5	Yes
4	2.8	8.5	11.0	No
5	2.3	5.1	9.1	No
6	2.3	5.1	9.1	No

D. Sampling

Additional uncertainty can also be introduced due to how the flow measurement data is recorded. If, for example, a quantity varies sinusoidally, but that quantity is only measured at the times when the quantity is at a peak, then the average measurements will be higher than the true average. This would introduce a bias into the system. On the other hand, if a quantity is measured or sampled frequently, then there will be very little error introduced due to sampling. The flow rates at the Mayfair Pumping Station are sampled every five minutes, and these five-minute readings are used to determine the average daily volume pumped through the station. There are also chart recorders that estimate the volume pumped continuously. If the five-minute readings and the continuous chart recordings give the same estimate for the total volume, then it can be assumed that there is no additional uncertainty introduced due to sampling. The five-minute readings from the SCADA system were not readily available. Thus, the daily logs used in the Mayfair Pumping Station were used instead of the SCADA data. The daily logs report an hourly instantaneous reading of the venturi-type meters in operation as well as the daily volume pumped as reported by the chart recorders. If the sum of the 24 individual hourly readings on the daily log and the volume measured by the chart recorders are statistically the same, then it can be assumed that there would be no additional uncertainty introduced due to sampling.

To determine if chart recorders and the daily logs were reporting the same daily volume, a randomized complete block design was performed on some sample data with the measurement method acting as the treatments and the daily volume measurements acting as the blocks. The statistical tests were performed at the 95 percent confidence level. A summary of the results of the randomized complete block design tests appears in Table 4. It can be seen from Table 4 that, at the 95 percent confidence level, there is no statistical difference between the chart recorder and the sum of the 24 individual readings from the daily

log sheets for 25 of the 28 tests. These statistical tests were performed with the 24 hourly readings from daily log sheet and not the 288 5-minute readings from the SCADA system. If most of the venturi-type meters and chart recorders report the same value statistically with only 24 one-hour readings, then most of the venturi-type meters and chart recorders should report the same value statistically with 288 5-minute readings. Thus, it was assumed that there was no additional uncertainty introduced due to sampling.

Table 4.
Results of statistical analysis done to determine if there is a significant difference between the chart recorders and the sum of the 24 instantaneous flow measurements

Dates	Meter Number	Statistical Difference	Meter Number	Statistical Difference	Meter Number	Statistical Difference	Meter Number	Statistical Difference
2/1/95 - 2/15/95	3	No	1 & 4	No	6	No		
5/1/95 - 5/15/95	2	No	4	No	5	No		
7/1/95 - 7/15/95	2	No	4	No	5 & 6	No	1	No
9/16/95- 9/30/95	2 & 3	Yes	1 & 4	No	5 & 6	No	4	Yes
2/1/97 - 2/15/97	2 & 3	No	1 & 4	No	5	No		
5/1/97 - 5/15/97	2	No	1 & 4	No	5 & 6	No		
7/1/97 - 7/15/97	3	Yes	4	No	5 & 6	No	1	No
9/16/97- 9/30/97	3	No	4	No	5	No	1	No

E. Pressure Differential Measurement

The pressure differential on all of the venturi-type meters is measured using Johnson Yokogawa pressure transmitters. It was assumed that the accuracy specifications provided by the manufacturer were correct. Linearity, hysteresis, repeatability, and deadband were considered the most important components of the overall accuracy of the pressure differential measurement using the Johnson Yokogawa pressure transmitter. Stability was not included in the manufacturer specifications and thus assumed to be insignificant compared to other uncertainties mentioned.

Johnson Yokogawa states that the accuracy of their pressure transmitters is ± 0.2 percent of the upper range limit (URL). This accuracy includes the effects of linearity, hysteresis, and repeatability. The combination of these errors was assumed to be systematic in nature with an unknown bias direction. The deadband is reported to be 0.05 percent of the URL. Because there are many flow changes throughout the year, the deadband can be considered a random error.

The URL of the pressure transmitter depends upon which venturi-type meter it is connected to. Table 5 is a listing of the URL's for the pressure transmitters connected to various venturi-type meters.

Table 5.
URL for Various Pressure Transmitters

Meter No.	URL (in. of Water)
1	192.32
2	538.65
3	156.21
4	192.32
5	412.00
6	412.00

F. Dry Calibration of Pressure Transmitters

The secondary measurement devices (i.e., pressure transmitters) are calibrated once a year using a Rochester DPG-700 pressure gauge. Because the pressure transmitter is adjusted to the DPG-700 reading, all of the random and systematic components of the DPG-700 module will become a bias reported by the Johnson Yokogawa pressure transmitter. Since both pressure and current readings are taken from the Rochester DPG-700 module during calibration, two accuracy values apply.[4] For the pressure reading, the accuracy is reported to be ± 0.05 percent of full scale plus one digit of display. Based on manufacturer's specifications, the pressure display is shown to 0.002 pounds per square-inch gauge (PSIG), which is equal to 0.055 inches of water. The range of the Rochester DPG-700 module is 0 to 30 pounds per square inch ([psi] or 830.80 inches of water). The current reading's uncertainty is reported as ± 0.05 percent of full scale plus one digit of display. The upper range limit for the current is 50 mA. The current resolution is 0.005 mA. Note, however, that the two parameters of the calibrator (accuracy of the pressure module and accuracy of the current multimeter) may not be totally uncorrelated

[4] Note that the previous *Technical Review of Lake Michigan Water Withdrawals by the Mayfair Pumping Station* as prepared by the USGS only included uncertainty for the pressure reading of the calibrator. Conversations with the manufacturer indicated that uncertainty due to the multimeter reading should also be included in the analyses.

since the pressure transmitter converts a physical measurement, the pressure, into an electrical signal while the multimeter loop current appears to be correlated to the pressure from the pressure module. Although, these parameters may not be totally uncorrelated, it was not accounted for in this analysis. The direction of these biases, although unknown, will be in the same direction for all six meters in the Mayfair Station.

G. SCADA System

In order for the SCADA system to determine the volume pumped through the Mayfair station, the analog signal from the pressure transmitter must be converted to a digital signal. This process is done using an analog input module. The manufacturer's specifications state that the analog to digital conversion is done with an accuracy of ± 1.25 percent of full scale. In this case, the full scale was assumed to be the full scale of the venturi-type meter that the pressure transmitter was connected to. The error due to the analog to digital conversion should be random in nature.

3. Sample Uncertainty Calculation for Effluent Meters

To demonstrate how the uncertainty of the measured volume pumped through the Mayfair Station was estimated, a series of sample calculations follows. The method used to estimate the uncertainty is similar to that described in the *Technical Review of Lake Michigan Water Withdrawal by the City of Evanston*. Please refer to this document for background on the statistical handling of measurement uncertainty. The City provided the hourly logs of eight, 15 day periods. These time periods were February, May, July and September of 1995 and 1997. Note, however, that the hourly logs for July 13 and 14, 1995 were not available and hence omitted from the study period. It was assumed that the Mayfair Station's pumpages over these time periods were representative of the typical pumpages. It was also assumed that Mayfair Station's pumpages were constant over each hour reported on the daily log sheets. The uncertainty of the hourly and daily readings can be obtained using these assumptions. The uncertainties can be reported as the standard deviation of the measurements (expressed by the variable *s*) or in relative terms (expressed by the variable *CV*, which is the standard deviation of the measurements divided by the mean of the measurements).

A. Uncertainty of Hourly Flow Measurements

(1) Systematic (Bias) Error

The majority of the error components are systematic in nature. These systematic errors include error from the venturi tube, inadequate approach length, the pressure transmitters, and the calibration equipment. To determine the uncertainty of the hourly flow measurements, all uncertainties need to be in terms of percent accuracy of actual rate. The errors associated with the venturi tube and the inadequate approach lengths are already expressed in these terms. However, the accuracy associated with the pressure transmitters and calibration equipment are in terms of percent accuracy per upper range limit (URL) or full scale (FS).

The standard equation for the flow through a venturi-type meter is:

$$Q = \frac{C_d A_t}{\sqrt{1-\beta^4}} \sqrt{2g\Delta h} \qquad \textit{Equation (1)}$$

Where:

Q	=	Flow rate
C_d	=	Discharge coefficient

A_t	=	Area of the throat section
β	=	Ratio of the throat diameter to the approach section diameter (also referred to as the beta-ratio)
g	=	Acceleration due to gravity
Δh	=	Pressure differential across the meter

Based on manufacturer information, the C_d values for the meters range from 0.9857 to 0.9858, depending on the particular meter.

Note that the model assumes that the discharge coefficient, throat area, and throat to approach diameter ratio (i.e. β-ratio) introduce no errors to the discharge calculations. That is, the differential pressure head of the venturi meter is the only source of error or uncertainty.

At the Mayfair Station, each meter is dedicated to a single pump. For illustration of the uncertainty calculations, we will be examining the pumping characteristics for February 1, 1995. On this day, meter Nos. 3, 4, and 6 were used to measure flows.

The throat area, A_t, for the venturi-tube No. 3 is:

$$A_t = \frac{\Pi(25.45)^2}{4} = 508.7in^2 = 3.533ft^2 \qquad \textit{Equation (2)}$$

Likewise, the throat areas of meters No. 4 and 6 are 5.902 and 4.104 square feet, respectively. For the first hour on February 1, 1995, 29 million gallons per day (MGD), 50 MGD and 36 MGD were flowing through meters Nos. 3, 4, and 5, respectively. The pressure differential for meter No. 3 is calculated below using Equation (1), and the β-ratio of 0.6059 from Table 1.

$$\Delta h = \left[\frac{Q\sqrt{1-\beta^4}}{C_d A_t \sqrt{2g}}\right]^2 = 12\left[\frac{1.547(29\,MGD)\sqrt{1-(0.6059)^4}}{(0.9858)(3.533\,ft^2)\sqrt{2(32.16\,ft/s^2)}}\right]^2 = 26.78\ in. \qquad \textit{Equation (3)}$$

The values of 12 and 1.547 that appear in *Equation (3)* are unit conversion factors to convert feet to inches and MGD to cubic feet per second (cfs), respectively. A summary of flow characteristics for the first hourly reading of the three venturi-type meters on February 1 appears in Table 6.

Table 6
Summary of Flow Characteristics for the First Hourly Reading on February 1, 1995

Meter No.	Throat Area (sq. ft.)	Flow Rate (MGD)	Pressure Differential (in. Water)
3	3.533	29	26.78
4	5.902	50	28.43
6	4.104	36	31.58

The pressure differentials of all the meters are measured using Johnson Yokogawa pressure transmitters. Based on the manufacturer's performance specifications, these pressure transmitters have an accuracy of ± 0.2 percent of URL. The URL's of pressure transmitters for meter Nos. 3, 4, and 6 are 156.21, 192.32, and 412.00 inches of water, respectively. Thus, the uncertainty in the pressure differential measurement due to accuracy for meter No. 3 would be ± 0.312 inches of water (i.e., ± 0.002 times 156.21). The uncertainty in the flow rate due to the accuracy of the pressure transmitter for meter No. 3 would then be:

$$CV_{Qa} = \frac{Xs_p}{\Delta h} = \frac{(0.5)(\pm 0.312in)}{26.78in} = \pm 0.583\% \qquad \textit{Equation (4)}$$

where CV_{Qa} is the uncertainty in the flow rate due to the accuracy of the pressure transmitter, s_p is an uncertainty in the pressure transmitter (due to transmitter accuracy in this case), X is the sensitivity coefficient equal to 0.5 for the pressure transmitter as the flow is directly proportional to the square root of the pressure differential in Equation (1), and Δh is the pressure differential. See *Technical Review of Lake Michigan Water Withdrawals by the City of Evanston* for additional information on the sensitivity coefficient, X. The uncertainty in the flow rate due to the transmitter's accuracy for meter Nos. 4 and 6 are shown in Table 7.

The pressure transmitters are calibrated using a Rochester DPG-700 calibrator. Since both pressure and current readings are taken from the calibrator, two independent accuracy values apply. For the pressure reading, the accuracy is reported to be ± 0.05 percent of full scale, plus one digit of display. Based on manufacturer's specification, the pressure display is shown to 0.002 PSIG, which is equal to 0.055 inches of water. The range of the Rochester DPG-700 module is 0 to 30 psi (or 830.80 inches of water). Thus, the uncertainty in the pressure component of the calibrator would be ± 0.470 inches of water (i.e., ± 0.0005 times 830.80, plus 0.055) for all of the meters. The uncertainty in the flow rate due to pressure component of the calibrator for meter No. 3 would then be:

$$CV_{Qa} = \frac{Xs_p}{\Delta h} = \frac{(0.5)(\pm 0.470in)}{26.78in} = \pm 0.878\% \qquad \textit{Equation (5)}$$

The current reading's uncertainty is reported as ± 0.05 percent of full scale, plus one digit of display. The upper range limit for the current is 50 mA. The current resolution is 0.005 mA. Thus, the uncertainty in the current component of the calibrator would be ± 0.030 mA (i.e., ± 0.0005 times 50, plus 0.005) for all meters The uncertainty in the flow rate due to current component of the calibrator for meter No. 3 would then be:

$$CV_{Qa} = \frac{Xs_i}{\Delta i} = \frac{(1.0)(\pm 0.030mA)}{10.6mA} = \pm 0.283\% \qquad \textit{Equation (6)}$$

where s_i is an uncertainty due to the current reading for the calibrator pressure differential and Δi is the current differential. The current differential is known to be linear to the flow rate with 4 mA corresponding to zero flow, and 20 mA corresponding to flow meter capacity, which is 70 MGD for meter No.3, 120 MGD for meter No. 4 and 130 MGD for meter No. 6. Using this relationship, for the first hour on February 1, the corresponding currents would be 10.6, 10.7, and 8.4 mA for meter Nos. 3, 4, and 6, respectively. Note that for this calculation, the sensitivity coefficient, *X*. is 1.0 since the flow rate is directly proportional to the current (i.e. a linear relationship). This process was repeated for meter Nos. 4 and 6's DPG-700 pressure gauge accuracy. A summary of these estimates appears in Table 7.

Table No. 7
Uncertainty from the Pressure Transmitters and Calibration Equipment for the First Hourly Reading on February 1, 1995, for Meters Nos. 3, 4, and 6

Meter No.	Instrument	Uncertainty Source	CV for Δh or ΔmA	URL or Calibrated Span	Uncertainty for Δh or ΔmA	CV for Flow (%)
3	Johnson Yokogawa	Pressure Transmitter	0.2 % of URL	156.21 in. Water	0.312 in. Water	0.583
3	DPG-700	Calibrator	0.05% FS + 1 digit*	830.8 in. Water	0.470 in. Water	0.878
3	DPG-700	Calibrator	0.05% FS + 1 digit**	50 mA	0.030 mA	0.283
4	Johnson Yokogawa	Pressure Transmitter	0.2 % of URL	192.32 in. Water	0.385 in Water	0.676
4	DPG-700	Calibrator	0.05% FS + 1 digit*	830.8 in. Water	0.470 in. Water	0.827
4	DPG-700	Calibrator	0.05% FS + 1 digit**	50 mA	0.030 mA	0.281

Table No. 7
Uncertainty from the Pressure Transmitters and Calibration Equipment for the First Hourly Reading on February 1, 1995, for Meters Nos. 3, 4, and 6

Meter No.	Instrument	Uncertainty Source	CV for Δh or ΔmA	URL or Calibrated Span	Uncertainty for Δh or ΔmA	CV for Flow (%)
6	Johnson Yokogawa	Pressure Transmitter	0.2 % of URL	412.00 in. Water	0.824 in. Water	1.305
6	DPG-700	Calibrator	0.05% FS + 1 digit*	830.8 in. Water	0.470 in. Water	0.745
6	DPG-700	Calibrator	0.05% FS + 1 digit**	50 mA	0.030 mA	0.356

* *One digit is equal to 0.055 in. Water*
** *One digit is equal to 0.005 mA*

In this study, the bias uncertainty estimates will be broken down into three categories:

- Bias uncertainty with a known bias direction.
- Bias uncertainty with an unknown bias, but known to be in the same direction for each meter.
- Bias uncertainty with an unknown bias direction.

Explanation of this breakdown was detailed in *Technical Review of Lake Michigan Water Withdrawal by the City of Evanston.* Table 8 lists the type of bias uncertainty for each of the bias estimates for the first hourly readings for meter Nos. 3, 4, and 6. Additionally, Table 8 also provides the absolute bias estimates for the first hourly readings taken from meter Nos. 3, 4, and 6 based on the following equation:

$$s_b = CV_{flow} \cdot Q_{\substack{first \\ hour}} = (0.00583)(29\,MGD) = 0.169\,MGD \qquad \textit{Equation (7)}$$

where S_b is the standard deviation (or absolute uncertainty) of the flow measurement due to the respective systematic uncertainty estimate.

Table 8.
Absolute Bias Estimates for the First Hourly Readings Taken on February 1, 1995

Meter No.	Bias Component	Type of Bias	CV_b(%)	S_b (MGD)
3	Venturi Tube*	Direction unknown	± 0.750	± 0.218
	Approach lengths	N/A	N/A	N/A

Meter No.	Bias Component	Type of Bias	CV_b(%)	S_b (MGD)
	Pressure transmitters – *Accuracy*	Direction unknown	± 0.583	± 0.169
	Calibrator – *Pressure* – *Current*	Direction unknown, but in same direction for all meters	± 0.878 ± 0.283	± 0.255 ± 0.082
4	Venturi Tube*	Direction unknown	± 0.750	± 0.375
	Approach lengths	Direction known	± 0.500	± 0.250
	Pressure transmitters – *Accuracy*	Direction unknown	± 0.676	± 0.338
	Calibrator – *Pressure* – *Current*	Direction unknown, but in same direction for all meters	± 0.827 ± 0.281	±±0.414 ± 0.141
6	Venturi Tube*	Direction unknown	± 0.750	± 0.270
	Approach lengths	N/A	N/A	N/A
	Pressure transmitters – *Accuracy*	Direction unknown	± 1.305	± 0.470
	Calibrator – *Pressure* – *Current*	Direction unknown, but in same direction for all meters	± 0.745 ± 0.353	± 0.268 ± 0.127

*Note that the sensitivity coefficient for the venturi tubes is 1.0 since the coefficient of discharge is directly proportional to the flow as shown in Equation (1).

The systematic uncertainty estimates for meter Nos. 3, 4, and 6 can be combined as shown below in *Equation (8)* to determine the overall hourly systematic uncertainty for February 1, 1995. To determine the uncertainty of the sum of the three measurements, the individual uncertainty estimates should be combined on the basis of absolute uncertainty (i.e., standard deviations) and not relative uncertainty (i.e., coefficient of variation).

$$S_b = \sum_{i=1}^{l_1}\sum_{j=1}^{m} S_{b_{ij\ \text{direction known}}} \pm \left[\sum_{i=1}^{l_2}\sum_{j=1}^{m} S^2_{b_{ij\ \text{direction unknown}}} + \sum_{i=1}^{l_3}\left(\sum_{j=1}^{m} S_{b_{ij\ \text{unknown but in same direction}}}\right)^2\right]^{\frac{1}{2}} \qquad \textit{Equation (8)}$$

Where-:

S_b = Combined uncertainty or standard deviation of the flow measurement.

$S_{bij\ direction\ known}$	=	Absolute bias uncertainty of known direction for measurement *i,j*.
$S_{bij\ unknown\ but\ in\ same\ direction}$	=	Absolute bias uncertainty of unknown direction but known to occur in the same direction for each meter for measurement *i,j*.
$S_{bij\ direction\ unknown}$	=	Absolute bias uncertainty of unknown direction for measurement *i,j*.
m	=	The number of meters.
I_1, I_2, I_3	=	The number of uncertainty components in $S_{bij\ direction\ known}$, $S_{bij\ direction\ unknown}$, and $S_{bij\ unknown\ but\ in\ same\ direction}$, respectively.

For the first hour, using *Equation (8)*, the overall absolute bias uncertainty, S_b, was found to be -0.50 ± 1.27 MGD, which corresponds to a relative uncertainty, CV_b, of -0.43 ± 1.11 percent (i.e.,-0.50 ± 1.27 MGD divided by the total flow rate of 115 MGD). This process was repeated for each of the 24-hour readings taken during the day. The results are provided in Table 9 (table combining random and bias).

(2) Random Error

Only the SCADA uncertainty and the pressure transmitter's dead band were identified as being random in nature. The manufacturer states that the SCADA's analog-to-digital conversion can take place with an uncertainty of ± 1.25 percent of full scale. As mentioned earlier, it was assumed that full scale refers to full scale of the venturi tube. Thus, for meter No. 3 with a capacity of 70 MGD, the absolute random uncertainty due to the SCADA system would be ± 0.87 MGD (± 0.01 times 70 MGD). Hence, the relative uncertainty estimate for the SCADA system would be ± 3.02 percent (i.e., ± 0.87 MGD divided by 29 MGD). Similarly, the absolute random uncertainty for meter Nos. 4 and 6 would be ± 1.50 MGD (i.e., ± 0.01 times 120 MGD) and ± 1.62 MGD (i.e., ± 0.01 times 130 MGD),respectively. Further, the relative random uncertainty would be ± 3.00 percent (i.e., ± 1.50 MGD divided by 50 MGD) and ± 4.52 percent (i.e., ± 1.62 MGD divided by 36 MGD) for meter Nos. 4 and 6, respectively.

The Johnson Yokogawa transmitters have a dead band of ± 0.05 percent of URL. The uncertainty due to the dead band of the pressure transmitters can be calculated using the methodology shown in *Equation (4)*. The uncertainty in the pressure differential measurement due to dead band would be ± 0.078 inches of water (i.e., ± 0.0005 times 156.21) for meter No. 3. Applying *Equation (4)*, the uncertainty in the flow rate due to the dead band of the pressure transmitter would then be ± 0.14 percent for meter No. 3. Similarly, the uncertainty in the flow rate due to the dead band of the pressure transmitter for meter Nos. 4 and 6 would be 0.16 and 0.32 percent, respectively. The absolute random uncertainty due to the pressure transmitter's dead band would be 0.04, 0.08, and 0.11 MGD for meter Nos. 3, 4, and 6, respectively.

The overall absolute random uncertainty can be determined by combining the absolute random uncertainties due to the SCADA system and the dead band of the pressure transmitter for meter Nos. 3, 4, and 6 using the root-mean-square method. The method results in an overall absolute random uncertainty of ± 2.38 MGD or an relative random uncertainty, CV_r, of ± 2.07 percent (i.e.,

± 2.38 MGD divided by 115 MGD) for the first hour on February 1, 1995. The results are provided in Table 9 (table combining random and bias).

(3) Combining Systematic and Random Errors

The systematic and random errors can be combined using the following methodology:

$$S_b = \sum_{i=1}^{l_1}\sum_{j=1}^{m} S_{b_{ij\ \text{direction known}}} \pm \left[\sum_{i=1}^{l_2}\sum_{j=1}^{m} S^2_{b_{ij\ \text{direction unknown}}} + \sum_{i=1}^{l_3}\left(\sum_{j=1}^{m} S_{b_{ij\ \text{unknown but in same direction}}}\right)^2 + \sum_{i=1}^{l_4}\sum_{j=1}^{m} S^2_{r_{ij}}\right]^{\frac{1}{2}} \qquad \text{Equation (9)}$$

Where:

S_{rij} = Absolute random uncertainty.

l_4 = The number of uncertainty components in S_{rij}..

Using *Equation (9)*, the overall uncertainty of the sum of the two flow measurements made in the first hour of February 1, 1995, is -0.50 ± 2.70 MGD, or -0.43 ± 2.35 percent.

This process is repeated for each of the 24-hour readings taken during the day and the results can be seen in Table 9. The average uncertainty, *CV*, of an hourly flow measurement performed on February 1, 1995 was -0.46 ± 2.18 percent. This implies that the 95 percent confidence interval, *CI*, for an hourly flow measurement would be -0.46 ± 4.51 percent (-0.46 ±[2.18 times 2.06]). Over the entire study period, the average uncertainty of an hourly flow measurement, *CV*, was found to be -0.26 ± 2.15 percent. The average 95 percent confidence interval of an hourly flow measurement, *CI*, would then be equal to -0.26 ± 4.21 percent (-0.26 ±[2.15 times 1.96]).

Table 9
Systematic, Random, and Overall Uncertainty Estimates for Hourly Flow Measurements Made on February 1, 1995

Hour	Total Flow (MGD)	CV_b (%)	S_b (MGD)	CV_r (%)	S_r (MGD)	Overall *CV* (%)
1	115	-0.43 ± 1.11	-0.500 ± 1.274	± 2.07	± 2.383	-0.43 ± 2.35
2	111	-0.42 ± 1.17	-0.470 ± 1.299	± 2.15	± 2.383	-0.42 ± 2.45
3	102	-0.40 ± 1.35	-0.410 ± 1.378	± 2.34	± 2.384	-0.40 ± 2.70
4	109	-0.42 ± 1.20	-0.460 ± 1.312	± 2.19	± 2.383	-0.42 ± 2.50
5	110	-0.41 ± 1.19	-0.450 ± 1.305	± 2.17	± 2.383	-0.41 ± 2.47
6	115	-0.42 ± 1.11	-0.480 ± 1.273	± 2.07	± 2.383	-0.42 ± 2.35
7	140	-0.47 ± 0.85	-0.660 ± 1.187	± 1.70	± 2.382	-0.47 ± 1.90
8	142	-0.44 ± 0.82	-0.630 ± 1.168	± 1.68	± 2.382	-0.44 ± 1.87

Table 9
Systematic, Random, and Overall Uncertainty Estimates for Hourly Flow Measurements Made on February 1, 1995

Hour	Total Flow (MGD)	CV_b (%)	S_b (MGD)	CV_r (%)	S_r (MGD)	Overall CV (%)
9	152	-0.48 ± 0.77	-0.730 ± 1.165	± 1.57	± 2.381	-0.48 ± 1.74
10	142	-0.48 ± 0.83	-0.680 ± 1.180	± 1.68	± 2.381	-0.48 ± 1.87
11	143	-0.48 ± 0.82	-0.690 ± 1.180	± 1.67	± 2.381	-0.48 ± 1.86
12	124	-0.44 ± 0.99	-0.550 ± 1.226	± 1.92	± 2.382	-0.44 ± 2.16
13	132	-0.47 ± 0.91	-0.620 ± 1.203	± 1.80	± 2.382	-0.47 ± 2.02
14	139	-0.50 ± 0.86	-0.690 ± 1.197	± 1.71	± 2.382	-0.50 ± 1.92
15	119	-0.43 ± 1.05	-0.510 ± 1.249	± 2.00	± 2.383	-0.43 ± 2.26
16	126	-0.44 ± 0.97	-0.560 ± 1.216	± 1.89	± 2.382	-0.44 ± 2.12
17	130	-0.46 ± 0.93	-0.600 ± 1.206	± 1.83	± 2.382	-0.46 ± 2.05
18	119	-0.43 ± 1.05	-0.510 ± 1.251	± 2.00	± 2.383	-0.43 ± 2.26
19	118	-0.49 ± 1.11	-0.580 ± 1.312	± 2.02	± 2.384	-0.49 ± 2.31
20	119	-0.49 ± 1.10	-0.580 ± 1.308	± 2.00	± 2.384	-0.49 ± 2.29
21	125	-0.54 ± 1.05	-0.670 ± 1.317	± 1.91	± 2.384	-0.54 ± 2.18
22	126	-0.53 ± 1.03	-0.670 ± 1.301	± 1.89	± 2.384	-0.53 ± 2.16
23	122	-0.48 ± 1.03	-0.580 ± 1.261	± 1.95	± 2.383	-0.48 ± 2.21
24	121	-0.50 ± 1.05	-0.600 ± 1.272	± 1.97	± 2.383	-0.50 ± 2.23

B. Uncertainty of Daily Volume Measurements

An estimate of the uncertainty of the daily volume pumped through the station can be obtained from the 24 hourly flow measurements. The volume pumped through the Mayfair Station is the average of the 24 hourly flow measurements times 1 day. For February 1, 1995, the average volume pumped through the station is 125.0 million gallons (MG).

The uncertainty of the systematic daily volume measurements can be determined using the following equation:

$$CV_{Vb} = CV_{bV_{\substack{direction\\known}}} + \frac{\Delta t}{m_v}\left(\sum_{k=1}^{n} Q_k^2 CV_{b_{k_{\substack{direction\\unknown}}}}^2 + \left(\sum_{k=1}^{n} Q_k CV_{b_{k_{\substack{unknown\\but\ in\ same\\direction}}}}\right)^2\right)^{\frac{1}{2}} \qquad \textit{Equation (10)}$$

Where-:

CV_{Vb}	=	Relative uncertainty of the total bias volume measurement
$CV_{bV\ direction\ known}$	=	Bias with known direction of the total volume measurement.
$CV_{bk\ direction\ unknown}$	=	Bias error in individual flow measurement *k* where the bias direction is unknown.
$CV_{bk\ unknown\ but\ in\ same\ direction}$	=	Bias error in individual flow measurement *k* where the bias direction is unknown, but in the same direction for all meters.
Δt	=	Time increment.
Q_k	=	Value of flow measurement *k*.
m_V	=	Sum of all *n* volume measurements.

Using *Equation (10)*, the relative systematic error, CV_{Vb}, was -0.46 ± 1.77 percent for February 1, 1995.

The average random uncertainty component for the daily volume can be obtained from the following expression:

$$CV_{Vr} = \pm \frac{\Delta t}{m_v}\left(\sum_{k=1}^{n} Q_k^2 CV_{rk}^2\right)^{\frac{1}{2}} \qquad \text{Equation (11)}$$

Where:

CV_{rk}	=	Random error in individual flow measurement *k*.
CV_{Vr}	=	Relative uncertainty of the volume measurement.

Using *Equation (11)*, the relative random uncertainty of the daily volume, CV_{vr}, for February 1, 1995, is 0.39 percent.

The overall uncertainty of the daily volume can then be found by combining the systematic and random uncertainty components in the following manner:

$$CV_V = CV_{bV_{\substack{direction\\known}}} + \frac{\Delta t}{m_v}\left(\sum_{k=1}^{n} Q_k^2 CV^2_{b_{k_{\substack{direction\\unknown}}}} + \left(\sum_{k=1}^{n} Q_k CV_{b_{k_{\substack{unknown\\but\ in\ same\\direction}}}}\right)^2 + \sum_{k=1}^{n} Q_k^2 CV^2_{r_k}\right)^{\frac{1}{2}} \quad \text{Equation (12)}$$

For the date in question, the overall uncertainty of the daily volume, CV_V, was found to be -0.46 ± 0.86 percent, or -0.57 ± 1.07 MG (-0.46 ± 0.86 percent times 125.0 MG). The 95-percent confidence interval on the daily volume, CI_v, would then be -0.46 ± 1.78 percent (-0.46 ± [0.86 times 2.06]). Note that the 95-percent confidence interval for the daily volume (-0.46 ± 1.78 percent) is much narrower than the 95-percent confidence interval for the hourly flow measurement (-0.46 ± 4.51 percent). This is because the random errors and systematic errors with unknown direction associated with an hourly flow measurement are statistically canceled when they are summed over a day's time. The average random, systematic, and overall uncertainty for each day in each 2-week study period were found using the above method. A summary of the daily volume uncertainties for the February 1995 study period appears in Table 10.

Table 10.
Estimated Uncertainties for Daily Volumes in February 1995 Study Period

Date	CV_{Vb} (%)	CV_{Vr} (%)	CV_V (%)	CI_V (%)
February 1	-0.46 ± 0.77	± 0.39	-0.46 ± 0.86	-0.46 ± 1.78
February 2	-0.46 ± 0.77	± 0.39	-0.46 ± 0.86	-0.46 ± 1.78
February 3	-0.45 ± 0.78	± 0.39	-0.45 ± 0.87	-0.45 ± 1.81
February 4	-0.47 ± 0.79	± 0.39	-0.47 ± 0.89	-0.47 ± 1.83
February 5	-0.46 ± 0.82	± 0.40	-0.46 ± 0.91	-0.46 ± 1.88
February 6	-0.45 ± 0.78	± 0.39	-0.45 ± 0.87	-0.45 ± 1.80
February 7	-0.44 ± 0.80	± 0.40	-0.44 ± 0.89	-0.44 ± 1.85
February 8	± 0.77	± 0.39	± 0.86	± 1.78
February 9	± 0.79	± 0.40	± 0.88	± 1.83
February 10	± 0.76	± 0.38	± 0.85	± 1.76
February 11	-0.48 ± 0.75	± 0.38	-0.48 ± 0.84	-0.48 ± 1.74
February 12	-0.49 ± 0.81	± 0.40	-0.49 ± 0.90	-0.49 ± 1.87
February 13	-0.48 ± 0.76	± 0.38	-0.48 ± 0.85	-0.48 ± 1.76
February 14	-0.47 ± 0.76	± 0.38	-0.47 ± 0.85	-0.47 ± 1.75
February 15	-0.46 ± 0.78	± 0.39	-0.46 ± 0.87	-0.46 ± 1.80

C. Uncertainty of Annual Volume Measurements

The uncertainty in the annual volume pumped through the station can be estimated using the estimated uncertainty in daily volume measurements. As mentioned earlier, the study period consisted of 15-day periods in February, May, July, and September of 1995 and 1997 (July 13 and 14, 1995, were omitted from the study period since data was not available). In total, there were 118 days in the study period. Over this time period, the average systematic uncertainty for a daily volume measurement, CV_b, was determined to be -0.26 ± 0.90 percent (±0.14 percent from unknown biases and ± 0.89 percent from unknown biases known to be in the same direction for all meters) and the average random uncertainty for a daily volume measurement, CV_r, was estimated to be ± 0.36 percent. The average uncertainty in daily volume would then be -0.26 ± 0.97 percent, and the average 95-percent confidence interval for the daily volume would be -0.26 ± 2.01 percent. The uncertainty in the annual volume pumped through the Mayfair Station, CV_V can be determined as follows:

$$CV_V = CV_{b_{\substack{direction\\known}}} \pm \left(\frac{CV^2_{b_{\substack{direction\\unknown}}}}{n} + CV^2_{b_{\substack{unknown\\but\ in\ same\\direction}}} + \frac{CV_r^2}{n} \right)^{\frac{1}{2}}$$

$$= -0.26 \pm \left(\frac{0.14^2}{365} + 0.89^2 + \frac{0.36^2}{365} \right)^{\frac{1}{2}} = -0.26 \pm 0.89\%$$

Equation (13)

The 95-percent confidence interval of the annual volume, CI_v, would then simply be -0.26 ± 1.74 percent (-0.26 ±[0.89 times 1.960]). The 95-percent confidence interval for the annual volume (-0.26 ± 1.74 percent) is slightly less than the 95-percent confidence interval for the daily volume (-0.26 ± 2.01 percent. Most of the random error and unknown bias error associated with the daily volume measurement is statistically canceled when determining the uncertainty of the annual volume.

4. Quality Assurance

If the water accounting system is moved to the lakefront, there is concern that if one of the direct diverter's flow measurement systems goes down, that there would be no way to measure the withdrawals from the lake. Thus, it is desirable that the direct diverters have a back up measurement system and, if possible, some other independent check on the measurements to assure that the measurements are reasonable and accurate.

There are many backup systems at the Mayfair Pumping Station. If a problem is detected in one of the venturi-type meters, then the flow can simply be routed to another meter. If one of the pressure transmitters malfunctions, the flow can also be routed to a different venturi-type meter. Also, two of the venturi-type meters (meter Nos. 1 and 2) in the Mayfair Pumping Station are equipped with manometers that can also be used as a backup to the electronic pressure transmitters. The other four venturi-type meters do not have manometers connected to them; however, the city of Chicago plans on installing manometers on these four venturi-type meters in the future.

The SCADA system used to totalize the flow consists of several elements. A schematic of the SCADA system showing the flow and storage of data is provided in Appendix B. The signal from each pressure transmitter is sent to a computer (CP2), located at the plant, where the flow data is displayed, processed and temporally stored. This computer is only capable of storing 3 days worth of data. Therefore, the control center computer system (CP3) located at the Jardine water treatment plant reads the data from the CP2 and is responsible for storing and maintaining the flow records. Note that if CP2 were to fail, the data would not be communicated to CP3. The CP3 central control computer system consists of two computers with automatic failover such that if one computer fails, the other one takes over automatically. Both of these computers store data from the pumping station so none of the data should be lost in the event that either computer fails. The data stored on CP3 is also backed up on tape.

The data is transferred from the CP2 computer at the plant to the CP3 computer at Jardine over a dedicated communication line (i.e. a telephone line). This communication line does not have a backup. However, since the CP2 at the station can store up to three days of data, no data will be lost if the line is repaired within three days.

If the SCADA system were to fail, flow data can still be obtained from the chart recorders or manometers at the Mayfair Station. This data would then be manually inputted in the SCADA system once the problems with the SCADA system were corrected.

The chart recorder system is used as an independent check of the flow measurement system used at the Mayfair Pumping Station. If the average of the 24 hourly readings on the daily log sheet differs by more than 2 percent from the chart recorder, then the city of Chicago investigates the cause of this discrepancy. Thus, by monitoring the difference between the chart recorder and the daily log sheets, the city of Chicago will be able to catch malfunctions in their flow measurement system relatively quickly.

5. Summary of Inadequacies in the Current Metering Systems

For the most part, the current metering system provided a reasonable level of accuracy and has acceptable quality assurance. The following portion of the metering system appears to be deficient.

- The actual venturi tubes are not calibrated. Rather, the City assumes that the manufacturer's rating curves are correct. Calibration of the venturi tubes would confirm or deny this assumption.

- The overall accuracy in estimating the water supply pumpage is dependent upon many measurement and analysis functions. The documented technical review and much previous work were focused on the accuracy of the pumpage measurements in hardware (i.e., meters, calibrator, pressure transmitter, etc.) and software (SCADA, etc.). This analyses does not take into account procedural errors such as inconsistent data in water supply pumpage as a result of the reporting mechanism.

6. Recommendations for Long-Term QA/QC and Improvements to Metering

Recommendations for long-term QA/QC and improvements to metering are as follows:

- Calibration of the venturi tubes to determine if the manufacturer's rating curves are valid.
- Occasional inspection and measurement, if physically possible, of the inlet and throat of the meters to determine any possible presence and effects of corrosion and tuberculation on the meter's accuracy.
- Routine auditing of various water withdrawal reports, as part of the long-term QA/QC, as a means of accounting for procedural errors.

7. Conclusions

Some of the important conclusions are summarized below:

- For operational purposes, the city of Chicago can determine an hourly flow measurement reading to within about -0.26 ± 4.21 percent. This takes into account the random and systematic uncertainty associated with the venturi-type meters, the pressure transmitters, and the calibration unit.

- On an annual basis, the total volume pumped through the station can be determined to within approximately -0.26 ± 1.74 percent. The 95 percent confidence interval for the annual volume is narrower than the 95 percent confidence interval for the hourly flow measurements because much of the random and unknown bias errors associated with a measurement are statistically canceled when the measurements are summed over a year's time.

- There is some sort of backup system for all the measurements made at the Mayfair Pumping Station. There should be no loss in flow data under most conditions.

- The chart recorders in the Mayfair Pumping Station can be used as a check on the flow measurement system. The difference between the chart recorders and the daily log sheets should be less than 2 percent. A difference greater than 2 percent indicates that there may be a problem with the flow measurement system.

8. References

American Society of Mechanical Engineers, *Fluid Meters: Their Theory and Application*. ASME, New York, 6th ed., 1971.

Ametek Power Instruments, "Rochester DPG-700 Precision Digital Pressure Gauge," http://www.rochester.com/Products/RIS/dgp-700.htm.

Analog Input Module PPX:505-6108A Electrical Specification [for the SCADA system], Date not provided.

Henry Pratt Company, *Technical Specifications*, no date provided.

International Organization for Standardization, *Measurements of Fluid Flows by Means of Pressure Differential Devices*, ISO, Switzerland, 1991.

Mead & Hunt, Inc., *Technical Review of Lake Michigan Water Withdrawals by the City of Evanston–Draft*, July 2002.

Meriam Instrument, *General Installation, Operation and Maintenance Instructions for Meriam Manometers*, April 1992.

Miller, Richard W., *Flow Measurement Engineering Handbook*, McGraw-Hill, New York, 1996.

Miner, I.O. *The Dall Flow Tube.* Transactions of the American Society of Mechanical Engineers, 1956.

Spitzer, David W., *Industrial Flow Measurement.* Instrument Society of America, North Carolina, 1990.

U.S. Water Conservation Laboratory, *Technical Review of Lake Michigan Water Withdrawals by the Mayfair Pumping Station in the City of Chicago*, December 1998.

Yokogawa Electric Corporation, *Specifications–Differential Pressure Transmitter* (Model YA11), 9th Edition, October 1995.

Final Report

Technical Review of Lake Michigan Withdrawals Roseland Pumping Station

City of Chicago

Prepared for:

U.S. Army Corps of Engineers – Chicago District
Chicago, Illinois

Prepared by:

MEAD & HUNT

August 2003

Table of Contents

Page

Executive Summary . . . . . E-i

1. General Description 1
   A. Summary of Operation 1
   B. Flow Measurement 1
   C. Flow Totalization 2
   D. Calibration 2

2. Uncertainty in Metering and Measurement Components 4
   A. Venturi-Type Meters 4
   B. Pressure Taps 4
   C. Meter Installation 4
   D. Sampling 7
   E. Pressure Differential Measurement 8
   F. Dry Calibration of Pressure Transmitters 9
   G. SCADA System 9

3. Sample Uncertainty Calculation for Effluent Meters 10
   A. Uncertainty of Hourly Flow Measurements 10
      (1) Systematic (Bias) Error 10
      (2) Random Error 17
      (3) Combining Systematic and Random Errors 17
   B. Uncertainty of Daily Volume Measurements 19
   C. Uncertainty of Annual Volume Measurements 21

4. Quality Assurance 23

5. Summary of Inadequacies in the Current Metering Systems 24

6. Recommendations for Long-Term QA/QC and Improvements to Metering 25

7. Conclusions 26

References 27

List of Tables

Table		Page
1	Flow Measurement Devices Used at the Roseland Station	2
2	Upstream Disturbances and Approximate Approach Lengths for the Various Venturi Meters at the Roseland Station	6
3	Summary of Required and Actual Downstream Straight Pipe Lengths at the Roseland Station	7
4	Results of the Randomized Complete Block Design Comparison Between the Flow Data From the Chart Recorders and the 24-Hour Readings	8
5	Summary of f Flow Characteristics for the First Hourly Reading on September 1, 1998	11
6	Uncertainty From the Pressure Transmitters and Calibration Equipment for the First Hourly Reading on February 1, 1995, for the Venturi Nos. 1, 3, and 4	13
7	Absolute Bias Estimates for the First Hourly Readings Taken from September 1, 1998	15
8	Systematic, Random and Overall Uncertainty Estimates for Hourly Flow Measurements Made on September 1, 1998	18
9	Estimated Uncertainties for Daily Volumes in September 1998 Study Period	21

List of Appendices

Appendix

A Schematic of the Roseland Station

B Schematic of the SCADA System

Executive Summary

Currently, diversion of water from Lake Michigan for the state of Illinois is measured at the Chicago Sanitary and Ship Canal at Romeoville. The Great Lakes Mediation Memorandum of Understanding established a lakefront diversion accounting system and specified a three-year transition period to assess the technical acceptability of moving the diversion measurement system to the lakefront. A lakefront diversion accounting system requires metering of all domestic water withdrawals from Lake Michigan and the direct diversions into the Chicago Sanitary and Ship Canal system at the Chicago River, the Calumet River, and the North Shore Channel at Wilmette. During the 3-year transition period, the U.S. Army Corps of Engineers (USACE) has been tasked to initiate a technical review of the accuracy of the reported domestic withdrawals from Lake Michigan.

The USACE retained Mead & Hunt, Inc. to evaluate the accuracy of domestic withdrawals from Lake Michigan. A total of 12 pumping stations in the city of Chicago (City) and six suburban pumping stations will be evaluated. These evaluations include revisions to the investigations conducted on the City's Mayfair and Thomas Jefferson Stations and the city of Evanston's Station by the Illinois District of the U.S. Geological Survey. This report presents a summary of the flow measurement techniques at the Roseland Station as employed by the City, as well as estimates of the uncertainty of daily and annual volume measurements. Presently, the Roseland Station consists of six steam operated pumps (soon to be converted to electrically operated pumps) and five venturi-type meters.

To obtain an estimate of the uncertainty of an individual flow measurement, we examined the manufacturer's accuracy specifications for both the primary flow measurement devices (i.e., the venturi-type meters) and secondary measurement devices (i.e., the pressure transducers). The Roseland Station's calibration technique, sampling technique, and device installation were also examined. All of the sources of uncertainty identified from this analysis were then classified as either random or systematic in nature. Using this information and the data logs provided by the City, we obtained an estimate of the uncertainty of an individual flow measurement. From this information, an estimate of the uncertainty of the daily and annual volume withdrawn from the lake can be obtained using standard statistical techniques.

Some of the important conclusions are summarized below:

- For operational purposes, the City can determine the hourly flow measurement reading to within -0.32 ± 4.80 percent at the Roseland Station. This value take into account the random and systematic uncertainty associated with the venturi meters, pressure transmitters, calibration equipment and recording system.

- On an annual basis, the total volume pumped through the station can be determined to within -0.32 ± 1.49 percent. The 95-percent confidence interval for the annual volume is narrower than the 95-percent confidence interval for the hourly flow measurements made at the Roseland Station because the random and unknown bias errors associated with the measurement are statistically canceled when the measurements are summed over 1 year's time.

- There is some form of backup system for all the measurements made at the Roseland Station. No loss of flow data is likely under most conditions.

- The chart recorders at the Roseland Station can be used as a check on the flow measurement system. The difference between the chart recorders and the daily log sheets should be less than 2 percent. A difference greater than 2 percent indicates there may be a problem within the flow measurement system.

Technical Review of
Lake Michigan Withdrawals
Roseland Pumping Station
City of Chicago

1. General Description

A. Summary of Operation

The Roseland Pumping Station (Roseland Station) is currently in the process of being converted from a steam operated plant to an electrically operated plant. The Roseland station consists of six pumps and five venturi-type meters. Each pump's flow is dedicated to a specific venturi-type meter with the exception of pumps 2 and 2A which flow through one venturi-type meter (venturi No. 2). The pressure differentials on the meters are measured using Rosemount 1151 Smart pressure transmitters. The output signals from the pressure transmitters are sent to both the Supervisory Control and Data Acquisition (SCADA) system and to the Eurotherm Chessell chart recorders for totalization. The SCADA system is the primary recording device and samples the pressure transmitter signals every minute. These 1-minute readings are then used to determine the average daily volume pumped through any given venturi meter. The chart recorders are used as a backup to the SCADA system. The recorders provide a 24-hour record of pumpage for each venturi-type meter and totalization figures. However, once the station's conversion to electrical operation is completed, the use of the mechanical integrators and circular pump charts may be discontinued. A schematic of the Roseland station is provided in Appendix A.

B. Flow Measurement

The Roseland Station uses five venturi-type meters to measure the flow pumped through the station. Meters No. 1, 2, 3 and 4 are BIF venturi tubes that were installed between 1944 and 1954. Meter No. 5 is manufactured by PFS and was installed in 1997. Specifications of the five venturi-type meters are shown in Table 1.[1]

[1] The coefficient of discharge was calculated using Equation (1) of this report and the beta-ratio, venturi diameter, maximum flow and maximum differential pressure that was provided by the City of Chicago.

Table 1
Flow Measurement Devices Used at the Roseland Station

Venturi No.	Manu-facturer	Model No.	Approach Pipe Diameter (in.)	Throat Diameter (in.)	β-Ratio	Coefficient of Discharge	Max. Flow Rate (MGD)	Max. Differential Pressure (in. Water)
1	BIF	M-DF	42	27.0	0.6428	0.9846	150	544.05
2	BIF	M-DF	42	27.0	0.6428	0.9843	106	271.85
3	BIF	M-DF	42	27.0	0.6428	0.9892	100	239.54
4	BIF	M-DF	42	27.0	0.6428	0.9886	100	239.84
5	PFS	HVT-CI	42	26.9	0.6397	0.9947	100	242.47

C. Flow Totalization

At the Roseland Station, flow is totalized using two different methods. The SCADA system is the primary flow totalization system. First, the output from the pressure transmitters is sent to the SCADA system. The SCADA system samples the output every minute. The pressure transmitters' signal is divided by an integrator constant to convert it to a volume measurement. The sum of the 1,440, 1-minute readings is then used to determine the volume pumped through the system on a daily basis.

The pressure transmitters' signal is also sent to the chart recorders. The chart recorders are used as a backup system to the SCADA system, and provide a 24-hour graphical record of the pumpage for each venturi-type meter. Instantaneous estimates of the flow rate and total volume are also provided by the chart recorders.

D. Calibration

An effective calibration procedure should calibrate both the primary flow meter and its secondary measurement device. First, the secondary measurement device, such as a pressure transmitter, should be calibrated to ensure it is reading correctly. Then, the flow meter itself should be calibrated to ensure it is functioning properly. The City of Chicago (City) does not perform any wet calibrations on the primary flow meters or their secondary measurement devices. Thus, all of the City's calibrations can be considered inferential in nature. The secondary measurement devices (i.e., the pressure transmitters, totalizers, etc.) are dry-calibrated once a year. If the City notices a problem or discrepancy, the instruments are checked; repaired, if necessary; and calibrated. If these tasks cannot be completed immediately, the unit is taken out-of-service until it can be repaired and calibrated. When a pressure transmitter or totalizer is calibrated, a full dry- calibration is performed using the Rochester DPG-700 pressure gauge. This pressure gauge provides a "calibrated" differential pressure that can be used to

determine if the pressure transmitter or totalizer is reading properly. For the primary flow measurement devices, the City assumes the manufacturers' rating tables are correct.

After all the individual instruments have been dry-calibrated, the City performs an end-to-end calibration of the pumping station. When an end-to-end calibration is performed, the venturi-type meters are connected to manometers in order to obtain the pressure differentials. After an hour has passed, the volume measured by the manometer readings is compared to the volume measured by the totalizer. The City wants the difference between these two readings to be less than 2 percent for both the totalizer and instantaneous readings. This type of calibration is done to ensure that all the secondary measurement devices are working together properly.

During the calibration, the City takes readings both from the Meriam manometers and from the calibrated flow signal over a period of time, typically at least one hour. The averages of both sets of data are compared and if a significant difference in readings is detected, the calibrators are sent out for re-calibration and re-certification. The last re-calibration was April 2000. Per the manometer's specifications, the "NIST recognizes the U-type Manometer as a primary standard due to its inherent accuracy and simplicity of operation." The manometers do not require calibration, therefore comparing the values from the calibrated flow signal to the manometer's readings is a reasonable method of checking whether the calibrators should be re-certified.

2. Uncertainty in Metering and Measurement Components

A. Venturi-Type Meters

According to manufacturer's specifications, the four (meter nos. 1 through 4) BIF venturi tubes have an uncertainty of ± 0.75 percent of the actual rate (over 10:1 range). Since the BIF meters have been in use for 58 years, a possibility of pitting and corrosion in the critical areas exists. The City has not inspected any of the meters at the Roseland Station. However, the meters at the Roseland Station are similar to the meter inspected by the City at the Southwest Station in that the throats of the meters are lined with bronze. Bronze is known for its ability to resist corrosion and formation of tubercles. Therefore, it is reasonable to assume that any significant corrosion or tuberculation would occur on the inlet piping only. This was the case when the meter was inspected at the Southwest Station. Since the water pumped through the Roseland Station and the Southwest Station have the same water chemistry and are treated in the same manner, it is assumed that if the venturis at the Roseland Station were inspected, the results would be similar to the results of the meter inspection at the Southwest Station. Therefore, based on the determinations made in the *Technical Review of Lake Michigan–Southwest Pumping Station*, any error due to corrosion and tuberculation is considered insignificant for meter Nos. 1 through 4 at the Roseland Station.

According to manufacturer's specifications, the PFS meter (meter No. 5) has an accuracy of 0.34 percent of the actual rate. Meter No. 5 is a fairly new installation, being installed in 1997, and therefore, is assumed to have little to no wear, corrosion or tuberculation that would affect it's accuracy.

B. Pressure Taps

The pressure taps that are used to measure the pressure differential should be square with no roughness, burrs, or wire edges (Miller, 1996). If the pressure taps that are used do not meet these requirements, then a bias error would be introduced. It was not practical to inspect the pressure taps of these meters. The flow measurement devices were all constructed under a controlled manufacturing environment with very little opportunity for a pressure tap to be constructed poorly. Thus, we assumed that the manufacturer constructed the pressure taps correctly and that no additional error would be introduced due to the pressure taps.

C. Meter Installation

An appropriate length of straight, circular pipe is required upstream of the flow meter to guarantee that the velocity profile entering the meter is not distorted and that the meter will perform properly. The length of this approach section depends on number and types of bends and fittings located upstream of the meter.

Table 2 lists the approximate approach length and upstream fittings for the various venturi meters located at the Roseland Pumping Station. The "Required Approach Length for Zero Error" and the "Required Approach Length for 0.5 Percent Error" values reported in Table 2 were taken from ISO 5167-1:1991.

As shown in Table 2, meter Nos. 3 and 5 have the required minimum lengths for the first two upstream lengths of pipe. Meter Nos. 1 and 2, however, do not meet the minimum length to the first upstream fitting requirements, but do meet the minimum length to the second upstream fitting requirements. Meter Nos. 1 and 2 only have upstream lengths to the first fitting of 17.0 feet and 19.8, respectively, which is significantly less than the required minimum length for 0.5 percent error (82.3 feet). Meter No. 4 has an adequate upstream length to the first fitting however its length to the second upstream fitting of 3.2 feet is slightly less than the required minimum length for a 0.5 percent error (3.5 feet).

ISO 5167-1:1991 reference materials only provide lengths for zero error and 0.5 percent error. Therefore, although in some instances described above the actual pipe lengths are significantly less than the required minimum length for a 0.5 percent error, the exact error value is unknown. Consequently, although the error may be greater than 0.5 percent, this value will be assumed in the analysis. Given these assumptions, meter Nos. 1, 2, and 4 are assumed to have an additional 0.5 percent of error since their upstream piping does not meet the minimum upstream piping requirements.

The first fitting upstream of meter Nos. 1 and 2 have two bends in different planes which will cause a distorted flow profile with a significant amount of swirl. Miller reported that if a swirl was produced at the venturi meter, the flows tend to be under-reported. Therefore, meter Nos. 1 and 2 will have a -0.5 percent error. Meter No. 4 has a single bend as an upstream disturbance which will cause a distorted flow profile with little swirl at the venturi meter. No information was available for the bias direction for a distorted profile with little swirl. Therefore, it is assumed that for this application the flows of a distorted flow profile without swirl will also be under-reported. Given this, the error for meter No. 4 will also be -0.5 percent.

Table 2
Upstream Disturbances and
Approximate Approach Lengths for the
Various Venturi Meters at the Roseland Station

Venturi No.	First Upstream Fitting	First Upstream Approach Length (feet)	Required Pipe Length for Zero Error (feet)	Required Pipe Length for± 0.5% Error (feet)	Second Upstream Fitting	Second Upstream Approach Length (feet)	Required Pipe Length for Zero Error (feet)	Required Pipe Length for± 0.5% Error (feet)
1	Two bends in different planes	17.0	140.0	82.3	Reducer	49.5	18.4	4.4
2	Two bends in different planes	19.8	140.0	82.3	Single bend	46.7	7.0	3.5
3	Single bend	24.6	14.0	5.3	Single bend	11.2	7.0	3.5
4	Single bend	27.6	14.0	5.3	Single bend	3.2	7.0	3.5
5	Single bend	44.2	14.0	5.3	Valve	13.6	9.6	6.1

Inadequate straight piping downstream of the meter can also affect the meter's accuracy. ISO 5167-1:1991 reference materials indicate that as long as the downstream length of straight piping exceeds four times the meter's throat diameter, no additional error is expected. Unlike for the upstream piping lengths, the ISO 5167-1:1991 reference does not indicate what length would be required to provide an uncertainty of 0.5 percent or any other uncertainty value. The required and actual downstream lengths of straight pipe is summarized in Table 3. In all cases, the downstream straight pipe lengths are adequate to ensure no additional error due to downstream piping geometry.

Table 3
Summary of Required and Actual Downstream Straight Pipe Lengths at the Roseland Station

Venturi No.	Throat Diameter (feet)	Required Downstream Pipe Length for Zero Error (feet)	Actual Downstream Pipe Length (feet)	Meets Required Downstream Pipe Length?
1	2.25	9.0	33.0	Yes
2	2.25	9.0	29.5	Yes
3	2.25	9.0	31.0	Yes
4	2.25	9.0	33.3	Yes
5	2.25	9.0	25.6	Yes

D. Sampling

Additional uncertainty can also be introduced due to how the flow measurement data is recorded. If, for example, a quantity varies sinusoidally, but that quantity is only measured at the times when the quantity is at a peak, then the average measurements will be higher than the true average. This would introduce a bias into the system. On the other hand, if a quantity is measured or sampled frequently, then there will be very little error introduced due to the sampling. The flow rates at the Roseland Station are sampled every minute, and these 1-minute sample readings are used to determine the average daily volume pumped through the station. There are also chart recorders that estimate the volume pumped continuously. If the 1-minute samplings and the continuous chart recordings give the same estimate for the total volume, then it can be assumed that there is no additional uncertainty introduced due to sampling. The 1-minute sampling data from the SCADA system were not readily available. Thus, the daily logs used in the Roseland Station were used instead of the SCADA data. The daily logs report an hourly instantaneous flow reading for each venturi-type meter in operation, as well as the daily volume pumped as reported by the chart recorders. If the sum of the 24 individual hourly measurements on the daily log and the volume measured by the chart recorders are statistically the same, then it can be assumed that there would be no additional uncertainty introduced due to sampling.

To determine if the chart recorders and the daily logs were reporting the same volume, a randomized complete block design was performed on some sample data with the measurement method acting as the treatments and the daily volume measurements acting as the blocks. The statistical tests were performed at the 95-percent confidence level. A summary of the results of the randomized complete block tests appears in Table 4. These results indicate that, at the 95-percent confidence level, there appears to be statistical difference between the chart recorder and the sum of the 24 individual measurements of the daily log sheets. These statistical tests were performed with the 24 hourly readings

from the daily log sheet and not the 1,440 1-minute readings from the SCADA system. Therefore, the results are inconclusive. SCADA data of 1,440 1-minute readings would be required to truly determine the effects of sampling on the metering system's accuracy. Since this data is not readily available for the random complete block comparison, the analysis results are inconclusive and thus, the uncertainty due to sampling accuracy will not be included in the uncertainty calculations.

Table 4
Results of the Randomized Complete Block Design Comparison Between the Flow Data From the Chart Recorders and the 24 Hourly Readings

Dates	Venturi No.	Statistical Difference
September 1–14, 1998	1 and 2	Yes
	3	Yes
	4 and 5	No
February 1–14, 1999	1 and 5	Yes
	2	Yes
	2A	Yes
	3	Yes
May 1–14, 1999	2	No
	2A	Yes
	3	No
	4	No

E. Pressure Differential Measurement

The pressure differentials of all five venturi-type meters are measured using Rosemount 1151 Smart pressure transmitters. Based on the manufacturer's performance specifications, these pressure transmitters have an accuracy of ± 0.1 percent of the calibrated span. In conversations with technical support staff at Fisher-Rosemount, this accuracy includes effects caused by hysteresis, dead band, linearity, and repeatablity. The Rosemount 1151 Smart transmitters have a stability of ± 0.1 percent URL and a temperature effect of ± (0.2 percent URL plus 0.18 percent of calibrated span) per 100 degrees F. The lake temperature varies from about 32 to 70 degrees F. This is approximately a 40-degree F temperature range. The URL of the Rosemount 1151 Smart transmitters is 750 inches of water. It is assumed that the specifications provided by the manufacturer are correct. The combination of these errors is considered to be systematic in nature. The direction of this bias is unknown.

F. Dry Calibration of Pressure Transmitters

The secondary measurements devices (i.e., pressure transmitters) are calibrated once a year using a Rochester DPG-700 module. Because the pressure transmitter is adjusted to the Rochester DPG-700 reading, all of the uncertainty components of the Rochester DPG-700 module will become a bias reported by the Rosemount 1151 pressure transducer. Since both pressure and current readings are taken from the Rochester DPG-700 module during calibration, two accuracy values apply. For the pressure reading, the accuracy is reported to be ± 0.05 percent of full scale plus one digit of display. Based on manufacturer's specification, the pressure display is shown to 0.002 pounds per square-inch gauge (PSIG), which is equal to 0.055 inches of water. The range of the Rochester DPG-700 module is 0 to 30 pounds per square inch ([psi] or 830.80 inches of water). The current reading's uncertainty is reported as ± 0.05 percent of full scale plus one digit of display. The upper range limit for the current is 50 mA. The current resolution is 0.005 mA. Note, however, that the two parameters of the calibrator (accuracy of the pressure module and accuracy of the current multimeter) may not be totally uncorrelated since the pressure transmitter converts a physical measurement, the pressure, into an electrical signal while the multimeter loop current appears to be correlated to the pressure from the pressure module. Although, these parameters may not be totally uncorrelated, it was not accounted for in this analysis. The direction of these biases, although unknown, will be in the same direction for all five meters in the Roseland Station.

G. SCADA System

In order for the SCADA system to determine the volume pumped through the Roseland Station, the analog signal from the pressure transmitter was converted to a digital signal using an analog input module. The manufacturer's specifications state that the analog to digital conversion is accurate to within ± 1.25 percent of full scale over operating range, and to within ± 0.7 percent of full scale at 25 degrees C. Since the water temperature varies from 32 to 70 degrees F, the uncertainty value of ± 1.25 percent of full scale over operating range will be used. In this case, the full scale was assumed to be the full scale of the venturi-type meter to which the pressure transmitter was connected. The error due to the analog to digital conversion is random in nature.

3. Sample Uncertainty Calculation for Effluent Meters

To demonstrate how the uncertainty of the measured volume pumped through the Roseland Station was estimated, a series of sample calculations follows. The method used to estimate the uncertainty is similar to that described in the *Technical Review of Lake Michigan Water Withdrawal by the City of Evanston*. Please refer to this document for background on the statistical handling of measurement uncertainty. The City provided the hourly logs of three, 2-week periods. These time periods were the first 14 days in September 1998, and February and May 1999. It was assumed that the Roseland Station's pumpages over these time periods were representative of the typical pumpages. It was also assumed that Roseland Station's pumpages were constant over each hour reported on the daily log sheets. The uncertainty of the hourly and daily readings can be obtained using these assumptions. The uncertainties can be reported as the standard deviation of the measurements (expressed by the variable *s*) or in relative terms (expressed by the variable *CV*, which is the standard deviation of the measurements divided by the mean of the measurements).

A. Uncertainty of Hourly Flow Measurements

(1) Systematic (Bias) Error

The majority of the error components are systematic in nature. These systematic errors include error from the venturi, inadequate approach length, the pressure transmitters, and the calibration equipment. To determine the uncertainty of the hourly flow measurements, all uncertainties need to be in terms of percent accuracy of actual rate. The errors associated with the venturi and the inadequate approach lengths are already expressed in these terms. However, the accuracy associated with the pressure transmitters and calibration equipment are in terms of percent accuracy per calibrated span, upper range limit (URL), full scale (FS), or a combination of these.

The standard equation for the flow through a venturi-type meter is:

$$Q = \frac{C_d A_t}{\sqrt{1-\beta^4}} \sqrt{2g\Delta h} \qquad \textit{Equation (1)}$$

where Q is the flow rate, C_d is the discharge coefficient, A_t is the area of the throat section, β is the ratio of the throat diameter to the approach section diameter (also referred to as the beta-ratio), g is the acceleration due to gravity, and Δh is the pressure differential across the meter. Based on manufacturer information, the C_d values for the venturi meters range from 0.9843 to 0.9947, depending on the particular meter.

Note that the model assumes that the discharge coefficient, throat area, and throat to approach diameter ratio (i.e., β-ratio) introduce no errors to the discharge calculations. That is, the differential pressure head of the venturi meter is the only source of error or uncertainty.

At the Roseland Station, each pump's flow is dedicated to a specific venturi-type meter with the exception of pump Nos. 2 and 2A, which flow through one venturi-type meter (venturi No. 2). For illustration of the uncertainty calculations, we will be examining the pumping characteristics for September 1, 1998. On this day, pump Nos. 1, 3, and 4 were routed through their respective venturi meters.

The throat area, A_t, for the venturi-meter No. 1 is:

$$A_t = \frac{\Pi(27.0)^2}{4} = 572.6in^2 = 3.976ft^2 \qquad \textit{Equation (2)}$$

Likewise, the throat areas of venturis No. 3 and 4 are also 3.976 square feet. For the first hour on September 1, 1998, 47 million gallons per day (MGD), 25 MGD and 48 MGD were flowing through venturi Nos. 1, 3, and 4, respectively. The pressure differential for venturi No. 1 is calculated below using Equation (1), and the β-ratio of 0.6428 from Table 1.

$$\Delta h = \left[\frac{Q\sqrt{1-\beta^4}}{C_d A_t \sqrt{2g}}\right]^2 = 12\left[\frac{1.547(47MGD)\sqrt{1-(0.6428)^4}}{(0.9846)(3.976ft^2)\sqrt{2(32.16ft/s^2)}}\right]^2 = 53.37in. \qquad \textit{Equation (3)}$$

The values of 12 and 1.547 that appear in *Equation (3)* are unit conversion factors to convert feet to inches and MGD to cubic feet per second (cfs), respectively. A summary of flow characteristics for the first hourly reading of the two venturi-type meters on September 1 appears in Table 5.

Table 5
Summary of Flow Characteristics for the First Hourly Reading on September 1, 1998

Venturi No.	Throat Area (sq. ft.)	Flow Rate (MGD)	Pressure Differential (in. Water)
1	3.976	47	53.37
3	3.976	25	14.96
4	3.976	48	55.24

The pressure differentials of all the venturi-type meters are measured using Rosemount 1151 Smart pressure transmitters. Based on the manufacturer's performance specifications, these pressure transmitters have an accuracy of ± 0.1 percent of the calibrated span, a stability of ± 0.10 percent of URL, and temperature effect of ± (0.2 percent URL, plus 0.18 percent of calibrated span) per 100 degrees C. The calibrated spans of venturi Nos. 1, 3, and 4 are 544.05, 239.54, and 239.84 inches of water, respectively, and the URL of the transmitters is 750 inches of water. Thus, the uncertainty in the pressure differential measurement due to accuracy would be ± 0.544 inches of water (i.e., ± 0.001 times 544.05) for venturi meter No. 1. The uncertainty in the flow rate due to the accuracy of the pressure transmitter for venturi meter No. 1 would then be:

$$CV_{Qa} = \frac{Xs_p}{\Delta h} = \frac{(0.5)(\pm 0.544in)}{53.37in} = \pm 0.510\% \qquad \textit{Equation (4)}$$

where CV_{Qa} is the uncertainty in the flow rate due to the accuracy of the pressure transmitter, s_p is an uncertainty in the pressure transmitter (due to transmitter accuracy in this case), X is the sensitivity coefficient equal to 0.5 for the pressure transducer as the flow is directly proportional to the square root of the pressure differential in Equation (1), and Δh is the pressure differential. See *Technical Review of Lake Michigan Water Withdrawals by the City of Evanston* for additional information on the sensitivity coefficient, X. The uncertainty in the flow rate due to the transmitter's accuracy, stability, and temperature affect for meter Nos. 3 and 4 are shown in Table 6.

The pressure transmitters are calibrated using a Rochester DPG-700 calibrator. Since both pressure and current readings are taken from the calibrator, two independent accuracy values apply. For the pressure reading, the accuracy is reported to be ± 0.05 percent of full scale, plus one digit of display. Based on manufacturer's specification, the pressure display is shown to 0.002 PSIG, which is equal to 0.055 inches of water. The range of the Rochester DPG-700 module is 0 to 30 psi (or 830.80 inches of water). Thus, the uncertainty in the pressure component of the calibrator would be ± 0.470 inches of water (i.e., ± 0.0005 times 830.80, plus 0.055) for venturi meter No. 1. The uncertainty in the flow rate due to pressure component of the calibrator for venturi meter No. 1 would then be:

$$CV_{Qa} = \frac{Xs_p}{\Delta h} = \frac{(0.5)(\pm 0.470in)}{53.37in} = \pm 0.440\% \qquad \textit{Equation (5)}$$

The current reading's uncertainty is reported as ± 0.05 percent of full scale, plus one digit of display. The upper range limit for the current is 50 mA. The current resolution is 0.005 mA. Thus, the uncertainty in the current component of the calibrator would be ± 0.030 mA (i.e., ± 0.0005 times 50, plus 0.005) for venturi meter No. 4. The uncertainty in the flow rate due to current component of the calibrator for venturi meter No. 1 would then be:

$$CV_{Qa} = \frac{Xs_i}{\Delta i} = \frac{(1.0)(\pm 0.030mA)}{9.0mA} = \pm 0.333\% \qquad \textit{Equation (6)}$$

where s_i is an uncertainty due to the current reading for the calibrator pressure differential and Δi is the current differential. The current differential is known to be linear to the flow rate with 4 mA corresponding to zero flow, and 20 mA corresponding to flow meter capacity, which is 150 MGD for meter No. 1 and 100 MGD for meter Nos. 3 and 4. Using this relationship, for the first hour on September 1, the corresponding currents would be 9.0 mA for meter No. 1, 8.0 mA for meter No. 3 and 11.7 mA for meter No. 4. Note that for this calculation, the sensitivity coefficient, *X*, is 1.0 since the flow rate is directly proportional to the current (i.e. a linear relationship). This process was repeated for meter No. 3 and 4's DPG-700 pressure gauge accuracy. A summary of these estimates appears in Table 6.

Table No. 6
Uncertainty From the Pressure Transmitters and Calibration Equipment for the First Hourly Reading on February 1, 1995, for Venturi Nos. 1, 3, and 4

Venturi No.	Instrument	Uncertainty Source	CV for Δh or ΔmA	URL or Calibrated Span	Uncertainty for Δh or ΔmA	CV for Flow (%)
1	Rosemount	Pressure Transmitter	0.1% of calib. span	544.05 in. Water	0.544 in. Water	0.510
1	Rosemount	Pressure Transmitter	0.1% of URL	750 in. Water	0.750 in. Water	0.702
1	Rosemount	Pressure Transmitter	(0.2% URL + 0.18% calib. span)/100° F	750 in. Water and 544.05 in. Water	0.992 in. Water	0.929
1	DPG-700	Calibrator	0.05% FS + 1 digit*	830.8 in. Water	0.470 in Water	0.440
1	DPG-700	Calibrator	0.05% FS + 1 digit**	50 mA	0.030 mA	0.333
3	Rosemount	Pressure Transmitter	0.1% of calib. span	239.54 in. Water	0.240 in. Water	0.800
3	Rosemount	Pressure Transmitter	0.1% of URL	750 in. Water	0.750 in. Water	2.507
3	Rosemount	Pressure Transmitter	(0.2% URL + 0.18% calib. span)/100°F	750 in. Water and 239.54 in. Water	0.772 in. Water	2.582
3	DPG-700	Calibrator	0.05% FS + 1 digit*	830.8 in. Water	0.470 in. Water	1.572
3	DPG-700	Calibrator	0.05% FS + 1 digit**	50 mA	0.030 mA	0.375

Table No. 6
Uncertainty From the Pressure Transmitters and Calibration Equipment for the First Hourly Reading on February 1, 1995, for Venturi Nos. 1, 3, and 4

Venturi No.	Instrument	Uncertainty Source	CV for Δh or ΔmA	URL or Calibrated Span	Uncertainty for Δh or ΔmA	CV for Flow (%)
4	Rosemount	Pressure Transmitter	0.1% of calib. span	239.80in. Water	0.240 in. Water	0.217
4	Rosemount	Pressure Transmitter	0.1% of URL	750 in. Water	0.750 in. Water	0.679
4	Rosemount	Pressure Transmitter	(0.2% URL + 0.18% calib. span)/100°F	750 in. Water and 239.80 in. Water	0.773 in. Water	0.699
4	DPG-700	Calibrator	0.05% FS + 1 digit*	830.8 in. Water	0.470 in. Water	0.426
4	DPG-700	Calibrator	0.05% FS + 1 digit**	50 mA	0.030 mA	0.257

* *One digit is equal to 0.055 in. Water*
** *One digit is equal to 0.005 mA*

In this study, the bias uncertainty estimates will be broken down into three categories:

- Bias uncertainty with a known bias direction.
- Bias uncertainty with an unknown bias, but known to be in the same direction for each meter.
- Bias uncertainty with an unknown bias direction.

Explanation of this breakdown was detailed in *Technical Review of Lake Michigan Water Withdrawal by the City of Evanston*. Table 7 lists the type of bias uncertainty for each of the bias estimates for the first hourly readings for venturi meter Nos. 1, 3, and 4. Additionally, Table 7 also provides the absolute bias estimates for the first hourly readings taken from venturi meter Nos. 1, 3, and 4 based on the following equation:

$$s_b = CV_{flow} \cdot Q_{\substack{first \\ hour}} = (0.00510)(47\,MGD) = 0.240\,MGD \qquad \textit{Equation (7)}$$

where S_b is the standard deviation (or absolute uncertainty) of the flow measurement due to the respective systematic uncertainty estimate, CV_{flow} is the relative uncertainty in the flow rate and $Q_{first\ hour}$ is the flow for the first hour.

Table 7
Absolute Bias Estimates for the First Hourly Readings
Taken on September 1, 1998

Venturi No.	Bias Component	Type of Bias	CV_b(%)	S_b (MGD)
1	Venturi	Direction unknown	± 0.750	± 0.353
	Approach lengths	Direction known	-0.500	- 0.235
	Pressure transmitters			
	– Accuracy	Direction unknown	± 0.510	± 0.240
	– Stability	Direction unknown	± 0.702	± 0.330
	– Temperature	Direction unknown	± 0.929	± 0.437
	Calibrator			
	– Pressure	Direction unknown,	± 0.440	± 0.207
	– Current	but in same direction for all meters	± 0.333	± 0.157
3	Venturi	Direction unknown	± 0.750	± 0.188
	Approach lengths	N/A	N/A	N/A
	Pressure transmitters			
	– Accuracy	Direction unknown	± 0.800	± 0.200
	– Stability	Direction unknown	± 2.507	± 0.627
	– Temperature	Direction unknown	± 2.582	± 0.646
	Calibrator			
	– *Pressure*	Direction unknown,	± 1.572	± 0.393
	– *Current*	but in same direction for all meters	± 0.375	± 0.094
4	Venturi	Direction unknown	± 0.750	± 0.360
	Approach lengths	Direction known	- 0.500	- 0.240
	Pressure transmitters			
	– Accuracy	Direction unknown	± 0.217	± 0.104
	– Stability	Direction unknown	± 0.679	± 0.326
	– Temperature	Direction unknown	± 0.699	± 0.336
	Calibrator			
	– Pressure	Direction unknown,	± 0.426	± 0.204
	– Current	but in same direction for all meters	± 0.257	± 0.123

The systematic uncertainty estimates for meter Nos. 1, 3, and 4 can be combined as shown below in *Equation (8)* to determine the overall hourly systematic uncertainty for September 1, 1998. To determine the uncertainty of the sum of the three measurements, the individual uncertainty estimates should be combined on the basis of absolute uncertainty (i.e., standard deviations) and not relative uncertainty (i.e., coefficient of variation).

$$S_b = \sum_{i=1}^{l_1}\sum_{j=1}^{m} S_{b_{ij\ \substack{direction\\known}}} \pm \left[\sum_{i=1}^{l_2}\sum_{j=1}^{m} S^2_{b_{ij\ \substack{direction\\unknown}}} + \sum_{i=1}^{l_3}\left(\sum_{j=1}^{m} S_{b_{ij\ \substack{unknown\\but\ in\ same\\direction}}}\right)^2\right]^{\frac{1}{2}} \qquad \textit{Equation (8)}$$

Where:

S_b	=	Combined uncertainty or standard deviation of the flow measurement
$S_{bij\ direction\ known}$	=	Absolute bias uncertainty of known direction for measurement *i,j*
$S_{bij\ unknown\ but\ in\ same\ direction}$	=	Absolute bias uncertainty of unknown direction but known to occur in the same direction for each meter for measurement *i,j*
$S_{bij\ direction\ unknown}$	=	Absolute bias uncertainty of unknown direction for measurement *i,j*
m	=	The number of meters
l_1, l_2, l_3	=	The number of uncertainty components in $S_{bij\ direction\ known}$, $S_{bij\ direction\ unknown}$, and $S_{bij\ unknown\ but\ in\ same\ direction}$, respectively

For the first hour, using *Equation (8)*, the overall absolute bias uncertainty, S_b, was found to be -0.475 ± 1.585 MGD, which corresponds to a relative uncertainty, CV_b, of -0.40 ± 1.32 percent (i.e., -0.475 ± 1.585 MGD divided by the total flow rate of 120 MGD). This process was repeated for each of the 24-hour readings taken during the day. The results are provided in Table 8 (table combining random and bias).

(2) Random Error

Only the SCADA uncertainty was identified as being random in nature. The manufacturer states that the analog-to-digital conversion can take place with an uncertainty of ± 1.25 percent of full scale. As mentioned earlier, it was assumed that full scale refers to full scale of the venturi-type meter. Thus, for venturi No. 1 with a capacity of 150 MGD, the absolute random uncertainty due to the SCADA system would be ± 1.88 MGD (± 0.0125 times 150 MGD). Hence, the relative uncertainty estimate for the SCADA system would be ± 3.99 percent (i.e., ± 1.88 MGD divided by 47 MGD). Using this methodology, the random uncertainty for venturi No. 3 would be ± 1.25 MGD or ± 5.00 percent, while the random uncertainty for venturi No. 4 would be ± 1.25 MGD or ± 2.60 percent

The overall absolute random uncertainty can be determined by combining the absolute random uncertainties due to the SCADA system for venturi Nos. 1, 3, and 4 using the root-mean-square method. The method results in an overall absolute random uncertainty of ± 2.58 MGD or a relative random uncertainty, CV_r, of ± 2.15 percent (i.e., ±2.58 MGD divided by 120 MGD). The results are provided in Table 8.

(3) Combining Systematic and Random Errors

The systematic and random errors can be combined using the following methodology:

$$S_b = \sum_{i=1}^{l_1}\sum_{j=1}^{m} S_{b_{ij\,\text{direction known}}} \pm \left[\sum_{i=1}^{l_2}\sum_{j=1}^{m} S^2_{b_{ij\,\text{direction unknown}}} + \sum_{i=1}^{l_3}\left(\sum_{j=1}^{m} S_{b_{ij\,\text{unknown but in same direction}}}\right)^2 + \sum_{i=1}^{l_4}\sum_{j=1}^{m} S^2_{r_{ij}}\right]^{\frac{1}{2}} \quad \textit{Equation (9)}$$

Where:

S_{rij}	=	Absolute random uncertainty.
l_4	=	The number of uncertainty components in S_{rij}.

Using *Equation (9)*, the overall uncertainty of the sum of the two flow measurements made in the first hour of September 1, 1998, is -0.475 ± 3.025 MGD, or -0.40 ± 2.53 percent.

This process is repeated for each of the 24-hour readings taken during the day and the results can be seen in Table 8. The average uncertainty, *CV*, of an hourly flow measurement performed on September 1 was -0.40 ± 2.08 percent. This implies that the 95 percent confidence interval, *CI*, for an hourly flow measurement would be -0.40 ± 4.30 percent (-0.40 ±[2.08 times 2.069]). Over the entire study period, the average uncertainty of an hourly flow measurement, *CV*, was

found to be -0.32 ± 2.45 percent. The average 95 percent confidence interval of an hourly flow measurement, *CI*, would then be equal to -0.32 ± 4.80 percent (-0.32 ± 2.45 times 1.960]).

Table 8
Systematic, Random, and Overall Uncertainty Estimates for Hourly Flow Measurements Made on September 1, 1998

Hour	Total Flow (MGD)	CV_b (%)	S_b (MGD)	CV_r (%)	S_r (MGD)	Overall *CV* (%)
1	120	-0.40 ± 1.32	-0.475 ± 1.585	± 2.15	± 2.577	-0.40 ± 2.53
2	120	-0.40 ± 1.34	-0.480 ± 1.609	± 2.15	± 2.577	-0.40 ± 2.53
3	109	-0.40 ± 1.59	-0.435 ± 1.733	± 2.36	± 2.577	-0.40 ± 2.85
4	110	-0.40 ± 1.57	-0.440 ± 1.725	± 2.34	± 2.577	-0.40 ± 2.82
5	123	-0.40 ± 1.30	-0.495 ± 1.598	± 2.10	± 2.577	-0.40 ± 2.47
6	131	-0.39 ± 1.13	-0.515 ± 1.482	± 1.97	± 2.577	-0.39 ± 2.27
7	161	-0.39 ± 0.83	-0.630 ± 1.343	± 1.60	± 2.577	-0.39 ± 1.81
8	159	-0.40 ± 0.87	-0.635 ± 1.381	± 1.62	± 2.577	-0.40 ± 1.84
9	160	-0.39 ± 0.84	-0.620 ± 1.336	± 1.61	± 2.577	-0.39 ± 1.81
10	151	-0.38 ± 0.90	-0.580 ± 1.353	± 1.71	± 2.577	-0.38 ± 1.93
11	151	-0.38 ± 0.89	-0.580 ± 1.350	± 1.71	± 2.577	-0.38 ± 1.93
12	145	-0.39 ± 0.95	-0.560 ± 1.380	± 1.78	± 2.577	-0.39 ± 2.02
13	148	-0.39 ± 0.92	-0.570 ± 1.364	± 1.74	± 2.577	-0.39 ± 1.97
14	146	-0.38 ± 0.93	-0.555 ± 1.357	± 1.77	± 2.577	-0.38 ± 1.99
15	149	-0.38 ± 0.90	-0.560 ± 1.335	± 1.73	± 2.577	-0.38 ± 1.95
16	155	-0.39 ± 0.87	-0.600 ± 1.346	± 1.66	± 2.577	-0.39 ± 1.88
17	156	-0.40 ± 0.91	-0.630 ± 1.412	± 1.65	± 2.577	-0.40 ± 1.88
18	163	-0.39 ± 0.82	-0.640 ± 1.343	± 1.58	± 2.577	-0.39 ± 1.78
19	168	-0.39 ± 0.79	-0.655 ± 1.325	± 1.53	± 2.577	-0.39 ± 1.72
20	167	-0.40 ± 0.82	-0.670 ± 1.369	± 1.54	± 2.577	-0.40 ± 1.75
21	172	-0.38 ± 0.76	-0.660 ± 1.301	± 1.50	± 2.577	-0.38 ± 1.68
22	161	-0.37 ± 0.80	-0.595 ± 1.292	± 1.60	± 2.577	-0.37 ± 1.79
23	137	-0.40 ± 1.09	-0.550 ± 1.489	± 1.88	± 2.577	-0.40 ± 2.17
24	123	-0.40 ± 1.28	-0.490 ± 1.576	± 2.10	± 2.577	-0.40 ± 2.46

B. Uncertainty of Daily Volume Measurements

An estimate of the uncertainty of the daily volume pumped through the station can be obtained from the 24 hourly flow measurements. The volume pumped through the Roseland Station is the average of the 24 hourly flow measurements times one day. For September 1, 1998, the average volume pumped through the station is 145.2 million gallons (MG).

The uncertainty of the systematic daily volume measurements can be determined using the following equation:

$$CV_{Vb} = CV_{bV_{\substack{direction\\known}}} + \frac{\Delta t}{m_v}\left(\sum_{k=1}^{n} Q_k^2 CV_{b_{k_{\substack{direction\\unknown}}}}^2 + \left(\sum_{k=1}^{n} Q_k CV_{b_{k_{\substack{unknown\\but\ in\ same\\direction}}}}\right)^2\right)^{\frac{1}{2}} \qquad \textit{Equation (10)}$$

Where:

CV_{Vb}	=	Relative uncertainty of the total bias volume measurement
$CV_{bV\ direction\ known}$	=	Bias with known direction of the total volume measurement
$CV_{bk\ direction\ unknown}$	=	Bias error in individual flow measurement *k* where the bias direction is unknown
$CV_{bk\ unknown\ but\ in\ same\ direction}$	=	Bias error in individual flow measurement *k* where the bias direction is unknown, but in the same direction for all meters
Δt	=	Time increment
Q_k	=	Value of flow measurement *k*
m_V	=	Sum of all *n* volume measurements

Using *Equation (10)*, the relative systematic error, CV_{vb}, was -0.39 ± 0.57 percent for September 1, 1998.

The average random uncertainty component for the daily volume can be obtained from the following expression:

$$CV_{Vr} = \pm \frac{\Delta t}{m_v}\left(\sum_{k=1}^{n} Q_k^2 CV_{rk}^2\right)^{\frac{1}{2}} \qquad \textit{Equation (11)}$$

Where:

CV_{rk}	=	Random error in individual flow measurement *k*
CV_{Vr}	=	Relative uncertainty of the volume measurement

Using *Equation (11)*, the relative random uncertainty of the daily volume, CV_{vr}, for September 1, 1998, is ± 0.36 percent.

The overall uncertainty of the daily volume can then be found by combining the systematic and random uncertainty components in the following manner:

$$CV_V = CV_{bV_{\substack{direction\\known}}} + \frac{\Delta t}{m_v}\left(\sum_{k=1}^{n} Q_k^2 CV_{b_{k_{\substack{direction\\unknown}}}}^2 + \left(\sum_{k=1}^{n} Q_k CV_{b_{k_{\substack{unknown\\but\ in\ same\\direction}}}}}\right)^2 + \sum_{k=1}^{n} Q_k^2 CV_{r_k}^2\right)^{\frac{1}{2}} \qquad \textit{Equation (12)}$$

For the date in question, the overall uncertainty of the daily volume, CV_V, was found to be -0.39 ± 0.67 percent, or -0.566 ± 0.929 MG (-0.39 ± 0.64 percent times 145.2 MG). The 95-percent confidence interval on the daily volume, CI_v, would then be -0.39 ± 1.32 percent (-0.39 ±[0.64 times 2.069]). Note that the 95-percent confidence interval for the daily volume (-0.39 ± 1.32 percent) is much narrower than the 95-percent confidence interval for the hourly flow measurement (-0.40 ± 4.30 percent). This is because the random errors and systematic errors with unknown direction associated with an hourly flow measurement are statistically canceled when they are summed over a day's time. The average random, systematic, and overall uncertainty for each day in each 2-week study period were found using the above method. A summary of the daily volume uncertainties for the September 1998 study period appears in Table 9.

Table 9
Estimated Uncertainties for Daily Volumes in September 1998 Study Period

Date	CV_{Vb} (%)	CV_{Vr} (%)	CV_V (%)	CI_V (%)
September 1	-0.39 ± 0.57	± 0.36	-0.39 ± 0.67	-0.39 ± 1.39
September 2	-0.39 ± 0.55	± 0.36	-0.39 ± 0.66	-0.39 ± 1.36
September 3	-0.38 ± 0.61	± 0.38	-0.38 ± 0.72	-0.38 ± 1.49
September 4	-0.37 ± 0.64	± 0.38	-0.37 ± 0.75	-0.37 ± 1.54
September 5	-0.38 ± 0.55	± 0.36	-0.38 ± 0.66	-0.38 ± 1.36
September 6	-0.38 ± 0.52	± 0.35	-0.38 ± 0.62	-0.38 ± 1.28
September 7	-0.39 ± 0.64	± 0.39	-0.39 ± 0.75	-0.39 ± 1.54
September 8	-0.39 ± 0.72	± 0.42	-0.39 ± 0.84	-0.39 ± 1.73
September 9	-0.36 ± 1.02	± 0.43	-0.36 ± 1.11	-0.36 ± 2.29
September 10	-0.32 ± 1.28	± 0.42	-0.32 ± 1.35	-0.32 ± 2.79
September 11	-0.36 ± 0.81	± 0.39	-0.36 ± 0.90	-0.36 ± 1.86
September 12	-0.38 ± 0.56	± 0.36	-0.38 ± 0.67	-0.38 ± 1.38
September 13	-0.38 ± 0.54	± 0.36	-0.38 ± 0.65	-0.38 ± 1.34
September 14	-0.39 ± 0.66	± 0.40	-0.39 ± 0.77	-0.39 ± 1.60

C. Uncertainty of Annual Volume Measurements

The uncertainty in the annual volume pumped through the station can be estimated using the estimated uncertainty in daily volume measurements. As mentioned earlier, the study period consisted of 2-week periods in September 1998, and February and May of 1999. In total, there were 42 days in the study period. Over this time period, the average systematic uncertainty for a daily volume measurement, CV_b, was determined to be -0.32 ± 0.79 percent (± 0.22 percent from unknown biases and ± 0.76 percent from unknown biases known to be in the same direction for all meters) and the average random uncertainty for a daily volume measurement, CV_r, was estimated to be ± 0.41 percent. The average uncertainty in daily volume would then be -0.32 ± 0.89 percent, and the average 95-percent confidence interval for the daily volume would be -0.32 ± 1.84 percent. The uncertainty in the annual volume pumped through the Roseland Station, CV_V can be determined as follows:

$$CV_V = CV_{b_{\substack{direction \\ known}}} \pm \left(\frac{CV^2_{b_{\substack{direction \\ unknown}}}}{n} + CV^2_{b_{\substack{unknown \\ but\ in\ same \\ direction}}} + \frac{CV_r^2}{n} \right)^{\frac{1}{2}}$$

$$= -0.32 \pm \left(\frac{0.22^2}{365} + 0.76^2 + \frac{0.41^2}{365} \right)^{\frac{1}{2}} = -0.32 \pm 0.76\%$$

Equation (13)

The 95-percent confidence interval of the annual volume, CI_v, would then simply be -0.32 ± 1.49 percent (-0.32 ±[0.76 times 1.960]). The 95-percent confidence interval for the annual volume (-0.32 ± 1.49 percent) is slightly less than the 95-percent confidence interval for the daily volume (-0.32 ± 1.84 percent. Most of the random error and unknown bias error associated with the daily volume measurement is statistically canceled when determining the uncertainty of the annual volume.

4. Quality Assurance

If the water accounting system is moved to the lakefront, there is a concern that if one of the direct diverter's flow measurement systems goes down, that there would be no way to measure the withdrawals from the lake. Thus, it is desirable that the direct diverters have a backup measurement system and, if possible, some other independent check on the measurements to ensure that the measurements are reasonable and accurate.

There are many backup systems at the Roseland Station. If a problem is detected in a particular venturi meter or its corresponding pressure transmitter, that venturi meter and its pump can be shutdown and a different venturi and pump can be used in its place for metering and distribution. Also, all of the venturi meters at the Roseland Station are equipped with manometers that can be used as a backup to the pressure transmitters.

The SCADA system used to totalize the flow consists of several elements. A schematic of the SCADA system showing the flow and storage of data is provided in Appendix B. The signal from each pressure transmitter is sent to a computer (CP2), located at the plant, where the flow data is displayed, processed and temporally stored. This computer is only capable of storing three days worth of data. Therefore, the control center computer system (CP3) located at the Jardine water treatment plant reads the data from the CP2 and is responsible for storing and maintaining the flow records. Note that if CP2 were to fail, the data would not be communicated to CP3. The CP3 central control computer system consists of two computers with automatic failover such that if one computer fails, the other one takes over automatically. Both of these computers store data from the pumping station so none of the data should be lost in the event that either computer fails. The data stored on CP3 is also backed up on tape.

The data is transferred from the CP2 computer at the plant to the CP3 computer at Jardine over a dedicated communication line (i.e. a telephone line). This communication line does not have a backup. However, since the CP2 at the station can store up to three days of data, no data will be lost if the line is repaired within three days.

If the SCADA system were to fail, flow data can still be obtained from the chart recorders or manometers at the Roseland Station. This data would then be manually inputted in the SCADA system once the problems with the SCADA system were corrected.

The chart recorder system is used as an independent check of the flow measurement system used at the Roseland Station. If the average of the 24-hour readings on the daily log sheet differs by more than 2 percent from the chart recorder, the City investigates the source of the discrepancy. Thus, by monitoring the difference between the chart recorder and the daily log sheets, the City will be able to catch malfunctions in their measurement system relatively quickly.

5. Summary of Inadequacies in the Current Metering Systems

For the most part, the current metering system provided a reasonable level of accuracy and has acceptable quality assurance. There are few areas of the metering system which appear deficient.

- The actual venturi meters are not calibrated. Rather, the City assumes that the manufacturer's rating curves are correct. Calibration of the venturis would confirm or deny this assumption.

- The overall accuracy in estimating the water supply pumpage is dependent upon many measurement and analysis functions. The documented technical review and much previous work were focused on the accuracy of the pumpage measurements in hardware (i.e., meters, calibrator, pressure transmitter, etc.) and software (SCADA, etc.). This analyses does not take into account procedural errors such as inconsistent data in water supply pumpage as a result of the reporting mechanism.

6. Recommendations for Long-Term QA/QC and Improvements to Metering

Recommendations for long-term QA/QC and improvements to metering are as follows:

- Calibration of the venturi meters to determine if the manufacturer's rating curves are valid.
- Occasional inspection and measurement, if physically possible, of the inlet and throat of the venturi meters to determine any possible presence and effects of corrosion and tuberculation on the meter's accuracy.
- Upon conversion from stream-operated pumps to electrically-operated pumps, keep the chart recorders in place as a backup data recorders.
- Routine auditing of various water withdrawal reports, as part of the long-term QA/QC, as a means of accounting for procedural errors.

7. Conclusions

Some of the important conclusions are summarized below:

- For operational purposes, the City can determine the hourly flow measurement reading to within -0.32 ± 4.80 percent at the Roseland Station. This value take into account the random and systematic uncertainty associated with the venturi meters, pressure transmitters, calibration equipment and recording system.

- On an annual basis, the total volume pumped through the station can be determined to within -0.32 ± 1.49 percent. The 95 percent confidence interval for the annual volume is narrower than the 95 percent confidence interval for the hourly flow measurements made at the Roseland Station because the random and unknown bias errors associated with the measurement are statistically canceled when the measurements are summed over 1-year's time.

- There is some form of backup system for all the measurements made at the Roseland Station. No loss of flow data is likely under most conditions.

- The chart recorders at the Roseland Station can be used as a check on the flow measurement system. The difference between the chart recorders and the daily log sheets should be less than 2 percent. A difference greater than 2 percent indicates there may be a problem within the flow measurement system.

References

American Society of Mechanical Engineers, *Fluid Meters: Their Theory and Application*. ASME, New York, 6th ed., 1971.

Ametek Power Instruments, "Rochester DPG-700 Precision Digital Pressure Gauge," http://www.rochester.com/Products/RIS/dgp-700.htm.

Analog Input Module PPX:505-6108A Electrical Specification [for the SCADA system], Date not provided.

Fisher-Rosemount, *Model 1151 Smart Pressure Transmitters*, Rev. A1, Date not provided.

International Organization for Standardization, *Measurements of Fluid Flows by Means of Pressure Differential Devices*, ISO, Switzerland, 1991.

Mead & Hunt, Inc., *Technical Review of Lake Michigan Withdrawals – Southwest Pumping Station*, July 2002.

Mead & Hunt, Inc., *Technical Review of Lake Michigan Water Withdrawal by the City of Evanston–Draft*, July 2002.

Meriam Instrument, General Installation, Operation and Maintenance Instructions for Meriam Manometers, April 1992.

Miller, Richard W., *Flow Measurement Engineering Handbook*, McGraw-Hill, New York, 1996.

Primary Flow Signal, Inc., "Order and Flow Metering Sheet," October 8, 1996.

Spitzer, David W., *Industrial Flow Measurement*. Instrument Society of America, North Carolina, 1990.

Written Correspondence between Mr. R. W. Pence of the City of Chicago and David Clemmans of Energy Associates Inc. regarding the "BIF Flow Metering Equipment," August 18, 1977.

Final Report

Technical Review of Lake Michigan Withdrawals 68th Street Pumping Station

City of Chicago

Prepared for:

U.S. Army Corps of Engineers – Chicago District
Chicago, Illinois

Prepared by:

MEAD & HUNT

June 2003

Table of Contents

Page

Executive Summary . . . . . E-i

1. General Description 1
   A. Summary of Operation 1
   B. Flow Measurement 1
   C. Flow Totalization 2
   D. Calibration 2

2. Uncertainty in Metering and Measurement Components 4
   A. Venturi-Type Meters 4
   B. Pressure Taps 4
   C. Meter Installation 5
   D. Sampling 7
   E. Pressure Differential Measurement 8
   F. Dry Calibration of Pressure Transmitters 9
   G. SCADA System 9

3. Sample Uncertainty Calculation for Effluent Meters 10
   A. Uncertainty of Hourly Flow Measurements 10
      (1) Systematic (Bias) Error 10
      (2) Random Error 16
      (3) Combining Systematic and Random Errors 17
   B. Uncertainty of Daily Volume Measurements 18
   C. Uncertainty of Annual Volume Measurements 21

4. Quality Assurance 23

5. Summary of Inadequacies in the Current Metering Systems 24

6. Recommendations for Long-Term QA/QC and Improvements to Metering 25

7. Conclusions 26

References 27

MEAD & HUNT

List of Tables

Table		Page
1	Flow Measurement Devices Used at the 68th Station	1
2	Upstream Disturbances and Approximate Approach Lengths for the Various Venturi Meters at the 68th Station	6
3	Summary of Required and Actual Downstream Straight Pipe Lengths at the 68th Station	7
4	Results of the Random Complete Block Design Comparisons for the Mayfair, Central Park, Roseland, Springfield, and Western Pumping Stations	8
5	Uncertainty from the Pressure Transmitters and Calibration Equipment for the First Hourly Reading on September 1, 1998, for Venturi No. 6	13
6	Absolute Bias Estimates for the First Hourly Readings Taken on September 1, 1998	15
7	Systematic, Random, and Overall Uncertainty Estimates for Hourly Flow Measurements Made on September 1, 1998	17
8	Estimated Uncertainties for Daily Volumes in September 1998 Study Period	20

List of Appendices

Appendix

A Schematic of the 68th Station

B Schematic of the SCADA System

MEAD & HUNT

Executive Summary

Currently, diversion of water from Lake Michigan for the state of Illinois is measured at the Chicago Sanitary and Ship Canal at Romeoville. The Great Lakes Mediation Memorandum of Understanding established a lakefront diversion accounting system and specified a 3-year transition period to assess the technical acceptability of moving the diversion measurement system to the lakefront. A lakefront diversion accounting system requires metering of all domestic water withdrawals from Lake Michigan and the direct diversions into the Chicago Sanitary and Ship Canal system at the Chicago River, the Calumet River, and the North Shore Channel at Wilmette. During the three-year transition period, the U.S. Army Corps of Engineers (USACE) has been tasked to initiate a technical review of the accuracy of the reported domestic withdrawals from Lake Michigan.

The USACE retained Mead & Hunt, Inc. to evaluate the accuracy of domestic withdrawals from Lake Michigan. A total of 12 pumping stations in the city of Chicago (City) and six suburban pumping stations will be evaluated. These evaluations include revisions to the investigations conducted on the City's Mayfair and Thomas Jefferson Stations and the city of Evanston's Station by the Illinois District of the U.S. Geological Survey. This report presents a summary of the flow measurement techniques at the 68th Street Pumping Station (68th Station) as employed by the City, as well as estimates of the uncertainty of daily and annual volume measurements. Presently, the 68th Station consists of five electrically operated pumps and five venturi-type meters.

To obtain an estimate of the uncertainty of an individual flow measurement, we examined the manufacturer's accuracy specifications for both the primary flow measurement devices (i.e., the venturi-type meters) and secondary measurement devices (i.e., the pressure transducers). The 68th Station's calibration technique, sampling technique, and device installation were also examined. All of the sources of uncertainty identified from this analysis were then classified as either random or systematic in nature. Using this information and the data logs provided by the City, we obtained an estimate of the uncertainty of an individual flow measurement. From this information, an estimate of the uncertainty of the daily and annual volume withdrawn from the lake can be obtained using standard statistical techniques.

Some of the important conclusions are summarized below:

- For operational purposes, the City can determine the hourly flow measurement reading to within -0.47 ± 3.61 percent at the 68th Station. This value takes into account the random and systematic uncertainty associated with the venturi meters, pressure transmitters, calibration equipment, and recording system.

- On an annual basis, the total volume pumped through the station can be determined to within -0.47 ± 0.76 percent. The 95-confidence interval for the annual volume is narrower than the 95-percent confidence interval for the hourly flow measurements made at the 68th Station because the random and unknown bias errors associated with the measurement are statistically canceled when the measurements are summed over a year's time.

- With the exception of the SCADA system, the entire metering system has redundancy or backup for quality assurance. There is no backup data recorder at this time.

- There is no independent check of the flow measurement system that can be used as an indicator when there is a problem within the system.

Technical Review of
Lake Michigan Withdrawals
68th Street Pumping Station
City of Chicago

1. General Description

A. Summary of Operation

The 68th Street Pumping Station (68th Station) is an electrically-operated plant consisting of five pumps and five venturi-type meters. Each pump's flow is dedicated to a specific venturi-type meter. The pressure differentials on the meters are measured using Foxboro pressure transmitters. The output signals from the pressure transmitters are sent to the Supervisory Control and Data Acquisition (SCADA) system. The SCADA system samples the pressure transmitter signals every minute. These 1-minute readings are then used to determine the average daily volume pumped through any given venturi meter. No back up recording system to the SCADA system exists at the 68th Station. A schematic of the 68th station is provided in Appendix A.

B. Flow Measurement

The 68th Station uses five venturi-type meters to measure the flow pumped through the station. These five meters were installed between 1945 and 1959. Meter Nos. 1, 2, and 3 are manufactured by Simplex, whereas, meter Nos. 4 and 6 (note that there is no meter No. 5) are manufactured by BIF. Specifications of the five venturi-type meters are shown in Table 1.[1]

Table 1
Flow Measurement Devices Used at the 68th Station

Venturi No.	Manu-facturer	Model No.	Approach Pipe Diameter (in.)	Throat Diameter (in.)	β-Ratio	Coefficient of Discharge	Max. Flow Rate (MGD)	Max. Differential Pressure (in. Water)
1	Simplex	VT	36	27.4	0.7608	0.9879	80	116.40
2	Simplex	VT	36	27.4	0.7608	0.9879	80	116.40

[1] The coefficient of discharge was calculated using Equation (1) of this report and the beta-ratio, venturi diameter, maximum flow and maximum differential pressure that were provided by the City of Chicago.

Table 1
Flow Measurement Devices Used at the 68th Station

Venturi No.	Manu-facturer	Model No.	Approach Pipe Diameter (in.)	Throat Diameter (in.)	β-Ratio	Coefficient of Discharge	Max. Flow Rate (MGD)	Max. Differential Pressure (in. Water)
3	Simplex	unknown	36	26.9	0.7460	0.9868	75.42	116.40
4	BIF	53021	36	24.0	0.6667	0.9869	86	275.70
6	BIF	23160	36	24.0	0.6667	0.9873	86	275.48

C. Flow Totalization

A SCADA system is used for flow totalization at the 68th Station. First, the output from the pressure transmitters is sent to the SCADA system. The SCADA system samples the output every minute. The pressure transmitters' signal is divided by an integrator constant to convert it to a volume measurement. The sum of the 1,440, 1-minute readings is then used to determine the volume pumped through the system on a daily basis. There are no backup chart recorders at the 68th Station, however, if the SCADA system were to fail, readings could be obtained directly from the venturi manometers.

D. Calibration

An effective calibration procedure should calibrate both the primary flow meter and its secondary measurement device. First, the secondary measurement device, such as a pressure transmitter, should be calibrated to ensure it is reading correctly. Then, the flow meter itself should be calibrated to ensure it is functioning properly. The City of Chicago (City) does not perform any wet calibrations on the primary flow meters or their secondary measurement devices. Thus, all of the City's calibrations can be considered inferential in nature. The secondary measurement devices (i.e., the pressure transmitters, totalizers, etc.) are dry-calibrated once a year. If the City notices a problem or discrepancy, the instruments are checked; repaired, if necessary; and calibrated. If these tasks cannot be completed immediately, the unit is taken out-of-service until it can be repaired and calibrated. When a pressure transmitter or totalizer is calibrated, a full dry- calibration is performed using the Rochester DPG-700 pressure gauge. This pressure gauge provides a "calibrated" differential pressure that can be used to determine if the pressure transmitter or totalizer is reading properly. For the primary flow measurement devices, the City assumes the manufacturers' rating tables are correct.

After all the individual instruments have been dry-calibrated, the City performs an end-to-end calibration of the pumping station. When an end-to-end calibration is performed, the venturi-type meters are connected to manometers in order to obtain the pressure differentials. After an hour has passed, the volume measured by the manometer readings is compared to the volume measured by the totalizer. The City wants the difference between these two readings to be less than 2 percent for both the totalizer and instantaneous readings. This type of calibration is done to ensure that all the secondary measurement devices are working together properly.

During the calibration, the City takes readings both from the Meriam manometers and from the calibrated flow signal over a period of time, typically at least one hour. The averages of both sets of data are compared and if a significant difference in readings is detected, the calibrators are sent out for re-calibration and re-certification. The last re-calibration was April 2000. Per the manometer's specifications, the "NIST recognizes the U-type Manometer as a primary standard due to its inherent accuracy and simplicity of operation." The manometers do not require calibration, therefore comparing the values from the calibrated flow signal to the manometer's readings is a reasonable method of checking whether the calibrators should be re-certified.

2. Uncertainty in Metering and Measurement Components

A. Venturi-Type Meters

Based on manufacturer specifications, the BIF venturis (Nos. 4 and 6) have an accuracy of ±0.75 percent actual flow over the top 90 percent of the flow range and the Simplex venturis (Nos.1, 2, and 3) have an accuracy of ±0.50 percent of actual flow over the top 95 percent of the flow range. These venturi uncertainties are bias in nature with an unknown direction. Since the meters have been in use for 40 to 60 years, a possibility of pitting, tuberculation, and corrosion in the critical areas exists. In March 1977 correspondence between the Simplex manufacturer and the City, the manufacturer stated that given the age of the meters, "it is entirely possible that there may be tuberculation in the venturis." They further stated that without an examination of the meters, it is impossible to predict whether a meter's condition may affect its accuracy.

The City has not inspected any of the meters at the 68th Station. However, the meters at the 68th Station are similar to the meter inspected by the City at the Southwest Station in that the throats of the meters are lined with bronze. Bronze is known for its ability to resist corrosion and formation of tubercles. Therefore, it is reasonable to assume that any significant corrosion or tuberculation would occur on the inlet piping only. This was the case when the meter was inspected at the Southwest Station. Since the water pumped through the 68th Station and the Southwest Station have the same water chemistry and are treated in the same manner, it is assumed that if the venturis at the 68th Station were inspected, the results would be similar to the results of the meter inspection at the Southwest Station. Therefore, based on the determinations made in the *Technical Review of Lake Michigan–Southwest Pumping Station*, any error due to corrosion and tuberculation is considered insignificant at the 68th Station.

B. Pressure Taps

The pressure taps that are used to measure the pressure differential should be square with no roughness, burrs, or wire edges (Miller, 1996). If the pressure taps that are used do not meet these requirements, then a bias error would be introduced. It was not practical to inspect the pressure taps of these meters. The flow measurement devices were all constructed under a controlled manufacturing environment with very little opportunity for a pressure tap to be constructed poorly. Thus, we assumed that the manufacturer constructed the pressure taps correctly and that no additional error would be introduced due to the pressure taps.

C. Meter Installation

An appropriate length of straight, circular pipe is required upstream of the flow meter to guarantee that the velocity profile entering the meter is not distorted and that the meter will perform properly. The length of this approach section depends on number and types of bends and fittings located upstream of the meter.

Table 2 lists the approximate approach length and upstream fittings for the various venturi meters located at the 68th Pumping Station. The "Required Approach Length for Zero Error" and the "Required Approach Length for 0.5 Percent Error" values reported in Table 2 were taken from ISO 5167-1:1991.

As shown in Table 2, Meter Nos. 1 and 6 have the required minimum lengths for the first two upstream lengths of pipe. Meter No. 3 does not meet the minimum length to the first upstream fitting requirements, while Meter No. 2 does meet the minimum length to the second upstream fitting requirements. The first and second pipe lengths upstream of Meter No. 4 do not meet either of the minimum length requirements.

ISO 5167-1:1991 reference materials only provide lengths for zero error and 0.5 percent error. Therefore, although in some instances described above the actual pipe lengths are significantly less than the required minimum length for a 0.5 percent error, the exact error value is unknown. Consequently, although the error may be greater than 0.5 percent, this value will be assumed in the analysis. Similarly, some pipe lengths fall between the minimum requirements for zero error and 0.5 percent error. The actual error value in this situation is also unknown. Therefore, to be conservative, 0.5 percent error will be assumed in these instances. Given these assumptions, Meter Nos. 2 and 3 are assumed to have an additional 0.5 percent of error and Meter No. 4 will have an additional 1.0 percent error due to inadequate upstream piping lengths.

These inadequate pipe lengths will cause a distorted flow profile with little swirl at the venturi meter. No information was available for the bias direction for a distorted profile with little swirl. Miller reported that if a swirl was produced at the venturi meter, the flows tend to be under-reported. Therefore, it is assumed that for this application the flows of a distorted flow profile with little swirl will also be under-reported. Given this, the errors for meter Nos. 2, 3, and 4 will be -0.5 percent, -0.5 percent and -1.0 percent, respectively.

Table 2
Upstream Disturbances and
Approximate Approach Lengths for the
Various Venturi Meters at the 68th Station

Venturi No.	First Upstream Fitting	First Upstream Approach Length (feet)	Required Pipe Length for Zero Error (feet)	Required Pipe Length for± 0.5% Error (feet)	Second Upstream Fitting	Second Upstream Approach Length (feet)	Required Pipe Length for Zero Error (feet)	Required Pipe Length for± 0.5% Error (feet)
1	Single bend	20.3	13.5	9.0	Valve	9.9	8.3	5.3
2	Two bends in same plane	27.6	13.5	10.5	Single bend	1.2	6.0	3.0
3	Two bends in same plane	13.3	13.5	10.5	Single bend	6.0	6.0	3.0
4	Two bends in same plane	12.6	13.5	7.5	Valve	7.0	8.3	5.3
6	Valve	16.6	13.5	7.5	Two bends in same plane	11.0	6.8	3.8

Inadequate straight piping downstream of the meter can also affect the meter's accuracy. ISO 5167-1:1991 reference materials indicate that as long as the downstream length of straight piping exceeds four times the meter's throat diameter, no additional error is expected. Unlike for the upstream piping lengths, the ISO 5167-1:1991 reference does not indicate what length would be required to provide an uncertainty of 0.5 percent or any other uncertainty value. The required and actual downstream lengths of straight pipe is summarize in Table 3. In all cases, the downstream straight pipe lengths are adequate to ensure no additional error due to downstream piping geometry.

Table 3
Summary of Required and Actual Downstream Straight Pipe Lengths at the 68th Station

Venturi No.	Throat Diameter (feet)	Required Downstream Pipe Length for Zero Error (feet)	Actual Downstream Pipe Length (feet)	Meets Required Downstream Pipe Length?
1	2.25	9.0	12.6	Yes
2	2.25	9.0	13.4	Yes
3	2.25	9.0	16.4	Yes
4	2.00	8.0	17.9	Yes
6	2.00	8.0	11.0	Yes

D. Sampling

Additional uncertainty can also be introduced due to how the flow measurement data is recorded. If, for example, a quantity varies sinusoidally, but that quantity is only measured at the times when the quantity is at a peak, then the average measurements will be higher than the true average. This would introduce a bias into the system. On the other hand, if a quantity is measured or sampled frequently, then there will be very little error introduced due to the sampling. The flow rates at the 68th Station are sampled every minute, and these 1-minute sample readings are used to determine the average daily volume pumped through the station. Unlike some of the other Chicago stations, there are no continuous chart recorders with which to compare the 1-minute readings at the 68th Station. Thus, the 68th Station data alone is not sufficient to determine whether the 1-minute readings are adequate.

The Mayfair, Central Park, Roseland, Springfield and Western Pumping Stations all have average daily flows from chart recorder data to compare to their instantaneous 1-hour SCADA readings. A randomized complete block design was preformed on the data for these five stations and their results are provided in Table 4.

Table 4
Results of the Random Complete Block Design Comparisons for the Mayfair, Central Park, Roseland, Springfield, and Western Pumping Stations

Station	Number without Statistical Difference	Number with Statistical Difference
Central Park	2	4
Mayfair	25	3
Roseland	4	7

Table 4
Results of the Random Complete Block Design Comparisons for the Mayfair, Central Park, Roseland, Springfield, and Western Pumping Stations

Station	Number without Statistical Difference	Number with Statistical Difference
Springfield	5	1
Western	6	0

As shown in Table 4, the results are not consistent among the five stations tested. The results from the Mayfair, Springfield, and Western Stations indicate that in more cases than not there is no statistical difference between averages. The opposite is true for the Central Park and Roseland Stations. However, the statistical comparison was between the average daily volume from the chart recorder and average of 24, 1-hour instantaneous SCADA readings, since 1-minute SCADA readings were not available. The actual daily flow volume that is recorded for LMO reporting is based on 1-minute readings. Therefore, a possibility still exists that the chart recorder's daily average flow and the SCADA's daily flow based on 1-minute readings could be statistically the same.

It is assumed that sampling frequency does not produce an additional source of error at the 68th Station since the combined results from the Mayfair, Central Park, Roseland, Springfield, and Western Pumping Stations indicate that it is more likely than not that sampling frequency at the 68th Station is adequate.

E. Pressure Differential Measurement

The pressure differentials of all five venturi-type meters are measured using Foxboro 823 DP pressure transmitters. In conversations with technical support at Foxboro, it was determined that the significant uncertainty components include accuracy, stability, and temperature effect. According to Foxboro, these pressure transmitters have an accuracy of ± 0.2 percent of the calibrated span, a stability of ± 0.1 percent reference span and a temperature effect of ± 0.125 percent of reference span per 100 degrees F. The lake temperature varies from about 32 to 70 degrees F. This is approximately a 40-degree F temperature range. The calibrate span of meter Nos. 1, 2, and 3 is 116.4 inches of water, whereas the calibrated span of meter Nos. 4 and 6 is 275.5 inches of water. Given this information, it is assumed that meter Nos. 1, 2, and 3 have a medium range sensor and meter Nos. 4 and 6 have a high range sensor. Based on this assumption and information provided by Foxboro, the reference span for meter Nos. 1, 2, and 3 would be 100 inches of water and for meter Nos. 4 and 6 would be 500 inches of water. It is assumed that the specifications provided by the manufacturer are correct. The combination of these errors is considered to be systematic in nature. The direction of this bias is unknown.

F. Dry Calibration of Pressure Transmitters

The secondary measurements devices (i.e., pressure transmitters) are calibrated once a year using a Rochester DPG-700 module. Because the pressure transmitter is adjusted to the Rochester DPG-700 reading, all of the uncertainty components of the Rochester DPG-700 module will become a bias reported by the Foxboro pressure transducer. Since both pressure and current readings are taken from the Rochester DPG-700 module during calibration, two accuracy values apply. For the pressure reading, the accuracy is reported to be ± 0.05 percent of full scale plus one digit of display. Based on manufacturer's specification, the pressure display is shown to 0.002 pounds per square-inch gauge (PSIG), which is equal to 0.055 inches of water. The range of the Rochester DPG-700 module is 0 to 30 pounds per square inch ([psi] or 830.80 inches of water). The current reading's uncertainty is reported as ± 0.05 percent of full scale plus one digit of display. The upper range limit for the current is 50 mA. The current resolution is 0.005 mA. Note, however, that the two parameters of the calibrator (accuracy of the pressure module and accuracy of the current multi-meter) may not be totally uncorrelated since the pressure transmitter converts a physical measurement, the pressure, into an electrical signal while the multi-meter loop current appears to be correlated to the pressure from the pressure module. Although, these parameters may not be totally uncorrelated, it was not accounted for in this analysis. The direction of these biases, although unknown, will be in the same direction for all five meters in the 68th Station.

G. SCADA System

In order for the SCADA system to determine the volume pumped through the 68th Station, the analog signal from the pressure transmitter was converted to a digital signal using an analog input module. The manufacturer's specifications state that the analog to digital conversion is accurate to within ± 1.25 percent of full scale over operating range, and to within ± 0.7 percent of full scale at 25 degrees C. Since the water temperature varies from 32 to 70 degrees F, the uncertainty value of ± 1.25 percent of full scale over operating range will be used. In this case, the full scale was assumed to be the full scale of the venturi-type meter to which the pressure transmitter was connected. The error due to the analog to digital conversion is random in nature.

3. Sample Uncertainty Calculation for Effluent Meters

To demonstrate how the uncertainty of the measured volume pumped through the 68th Station was estimated, a series of sample calculations follows. The method used to estimate the uncertainty is similar to that described in the *Technical Review of Lake Michigan Water Withdrawal by the City of Evanston*. Please refer to this document for background on the statistical handling of measurement uncertainty. The City provided the hourly logs of three, two-week periods. These time periods were the first 14 days in September 1998, and February and May 1999. There were some periods of missing data due to the SCADA system being down. These missing periods were estimated based on data trends. In reviewing the data, it was apparent that some hourly values were not constant over the entire hour. For example, if during a an hour block, the meter was pumping 60 MGD but only pumping half an hour, the average flow for that hour would be one-half the pumped flow, or 30 MGD. Using the 30 MGD would incorrectly cause the metering uncertainty to be greater because 30 MGD is significantly less than the optimum flow range of the metering system. Therefore, any data points that appeared not to be constant flow over then entire hour were changed to zero. It was assumed that the 68th Station's pumpages over these time periods were representative of the typical pumpages. The uncertainty of the hourly and daily readings can be obtained using these assumptions. The uncertainties can be reported as the standard deviation of the measurements (expressed by the variable *s*) or in relative terms (expressed by the variable *CV*, which is the standard deviation of the measurements divided by the mean of the measurements).

A. Uncertainty of Hourly Flow Measurements

(1) Systematic (Bias) Error

The majority of the error components are systematic in nature. These systematic errors include error from the venturi, inadequate approach length, the pressure transmitters, and the calibration equipment. To determine the uncertainty of the hourly flow measurements, all uncertainties need to be in terms of percent accuracy of actual rate. The errors associated with the venturi and the inadequate approach lengths are already expressed in these terms. However, the accuracy associated with the pressure transmitters and calibration equipment are in terms of percent accuracy per calibrated span, reference span, or full scale (FS).

The standard equation for the flow through a venturi-type meter is:

$$Q = \frac{C_d A_t}{\sqrt{1-\beta^4}} \sqrt{2g\Delta h} \qquad \textit{Equation (1)}$$

Where:

Q	=	Flow rate.
C_d	=	Discharge coefficient.
A_t	=	Area of the throat section.
β	=	Ratio of the throat diameter to the approach section diameter (also referred to as the beta-ratio).
g	=	Acceleration due to gravity.
Δh	=	Pressure differential across the meter.

Based on manufacturer information, the C_d values for the venturi meters range from 0.9868 to 0.9879, depending on the particular meter.

Note that the model assumes that the discharge coefficient, throat area, and throat to approach diameter ratio (i.e., β-ratio) introduce no errors to the discharge calculations. That is, the differential pressure head of the venturi meter is the only source of error or uncertainty.

At the 68th Station, each venturi meter is dedicated to a single pump. For illustration of the uncertainty calculations, we will be examining the pumping characteristics for September 1, 1998. On this day, only pump No. 6 was routed through its respective venturi meter.

The throat area, A_t, for the venturi-meter No. 6 is:

$$A_t = \frac{\Pi(24.0)^2}{4} = 452.4in^2 = 3.142ft^2 \qquad \textit{Equation (2)}$$

For the first hour on September 1, 1998, 56 million gallons per day (MGD) was flowing through venturi No. 6. The pressure differential for venturi No. 6 is calculated below using Equation (1), and the β-ratio of 0.6667 from Table 1.

$$\Delta h = \left[\frac{Q\sqrt{1-\beta^4}}{C_d A_t \sqrt{2g}}\right]^2 = 12\left[\frac{1.547(56MGD)\sqrt{1-(0.6667)^4}}{(0.9873)(3.142ft^2)\sqrt{2(32.16ft/s^2)}}\right]^2 = 116.76in. \qquad \textit{Equation (3)}$$

The values of 12 and 1.547 that appear in *Equation (3)* are unit conversion factors to convert feet to inches and MGD to cubic feet per second (cfs), respectively.

The pressure differential of meter No. 6 is measured using Foxboro pressure transmitters. Based on the manufacturer's performance specifications, these pressure transmitters have an accuracy of ± 0.2 percent of the calibrated span, a stability of ± 0.1 percent reference span and a temperature effect of ± 0.125 percent of reference span per 100 degrees F. The calibrated span of venturi No. 6 is 275.48 inches of water and the reference span is 500 inches of water. Thus, the uncertainty in the pressure differential measurement due to accuracy would be ± 0.551 inches of water (i.e., ± 0.002 times 275.48) for venturi meter No. 6. The uncertainty in the flow rate due to the accuracy of the pressure transmitter for venturi meter No. 6 would then be:

$$CV_{Qa} = \frac{Xs_p}{\Delta h} = \frac{(0.5)(\pm 0.551in)}{116.76in} = \pm 0.236\% \qquad \textit{Equation (4)}$$

Where:

CV_{Qa}	=	Uncertainty in the flow rate due to the accuracy of the pressure transmitter.
s_p	=	Uncertainty in the pressure transmitter (due to transmitter accuracy in this case).
X	=	Sensitivity coefficient equal to 0.5 for the pressure transducer as the flow is directly proportional to the square root of the pressure differential in Equation (1).
Δh	=	Pressure differential.

See *Technical Review of Lake Michigan Water Withdrawals by the City of Evanston* for additional information on the sensitivity coefficient, *X*. The uncertainty in the flow rate due to the transmitter's stability, and temperature affect for meter No. 6 are shown in Table 5.

The pressure transmitters are calibrated using a Rochester DPG-700 calibrator. Since both pressure and current readings are taken from the calibrator, two independent accuracy values apply. For the pressure reading, the accuracy is reported to be ± 0.05 percent of full scale, plus one digit of display. Based on manufacturer's specification, the pressure display is shown to 0.002 PSIG, which is equal to 0.055 inches of water. The range of the Rochester DPG-700 module is 0 to 30 psi (or 830.80 inches of water). Thus, the uncertainty in the pressure component of the calibrator would be ± 0.470 inches of water (i.e., ± 0.0005 times 830.80, plus

0.055) for venturi meter No. 6. The uncertainty in the flow rate due to pressure component of the calibrator for venturi meter No. 6 would then be:

$$CV_{Qa} = \frac{Xs_p}{\Delta h} = \frac{(0.5)(\pm 0.470in)}{116.76in} = \pm 0.201\% \qquad \textit{Equation (5)}$$

The current reading's uncertainty is reported as ± 0.05 percent of full scale, plus one digit of display. The upper range limit for the current is 50 mA. The current resolution is 0.005 mA. Thus, the uncertainty in the current component of the calibrator would be ± 0.030 mA (i.e., ± 0.0005 times 50, plus 0.005) for venturi meter No. 6. The uncertainty in the flow rate due to current component of the calibrator for venturi meter No. 6 would then be:

$$CV_{Qa} = \frac{Xs_i}{\Delta i} = \frac{(1.0)(\pm 0.030mA)}{14.4mA} = \pm 0.208\% \qquad \textit{Equation (6)}$$

Where:

s_i = Uncertainty due to the current reading for the calibrator pressure differential and Δi is the current differential.

The current differential is known to be linear to the flow rate with 4 mA corresponding to zero flow, and 20 mA corresponding to flow meter capacity, which is 86 MGD for meter No. 6. Using this relationship, for the first hour on September 1, the corresponding current would be 14.4 mA for meter No. 6. A summary of these estimates appear in Table 5.

Table No. 5
Uncertainty From the Pressure Transmitters and Calibration Equipment for the First Hourly Reading on September 1, 1998, for Venturi No. 6

Venturi No.	Instrument	Uncertainty Source	CV for Δh or ΔmA	URL or Calibrated Span	Uncertainty for Δh or ΔmA	CV for Flow (%)
6	Foxboro	Pressure Transmitter	0.2% of calib. span	275.48 in. Water	0.551 in. Water	0.236
6	Foxboro	Pressure Transmitter	0.1% of reference span	500 in. Water	0.500 in. Water	0.214

Table No. 5
Uncertainty From the Pressure Transmitters and Calibration Equipment for the First Hourly Reading on September 1, 1998, for Venturi No. 6

Venturi No.	Instrument	Uncertainty Source	CV for Δh or ΔmA	URL or Calibrated Span	Uncertainty for Δh or ΔmA	CV for Flow (%)
6	Foxboro	Pressure Transmitter	0.125% of reference span per 100°F	500 in. Water	0.250 in. Water	0.107
6	DPG-700	Calibrator	0.05% FS + 1 digit*	830.8 in. Water	0.470 in. Water	0.201
6	DPG-700	Calibrator	0.05% FS + 1 digit**	50 mA	0.030 mA	0.208

* *One digit is equal to 0.055 in. Water*
** *One digit is equal to 0.005 mA*

In this study, the bias uncertainty estimates will be broken down into three categories:

- Bias uncertainty with a known bias direction.
- Bias uncertainty with an unknown bias, but known to be in the same direction for each meter.
- Bias uncertainty with an unknown bias direction.

Explanation of this breakdown was detailed in *Technical Review of Lake Michigan Water Withdrawals by the City of Evanston*. Table 6 lists the type of bias uncertainty for each of the bias estimates for the first hourly readings for venturi meter No. 6. Additionally, Table 6 also provides the absolute bias estimates for the first hourly readings taken from venturi meter No. 6 based on the following equation:

$$s_b = CV_{flow} \cdot Q_{\substack{first \\ hour}} = (0.00236)(56\,MGD) = 0.132\,MGD \qquad \textit{Equation (7)}$$

Where:

S_b = Standard deviation (or absolute uncertainty) of the flow measurement due to the respective systematic uncertainty estimate

CV_{flow}	=	Relative uncertainty in the flow rate.
$Q_{first\ hour}$	=	Flow for the first hour.

Table 6
Absolute Bias Estimates for the First Hourly Readings Taken on September 1, 1998

Venturi No.	Bias Component	Type of Bias	CV_b(%)	S_b (MGD)
6	Venturi	Direction unknown	± 0.750	± 0.420
	Approach lengths	N/A	N/A	N/A
	Pressure transmitters			
	– *Accuracy*	Direction unknown	± 0.236	± 0.132
	– *Stability*	Direction unknown	± 0.214	± 0.120
	– *Temperature*	Direction unknown	± 0.107	± 0.060
	Calibrator			
	– *Pressure*	Direction unknown,	± 0.201	± 0.113
	– *Current*	but in same direction for all meters	± 0.208	± 0.116

The systematic uncertainty estimates for meter No. 6 can be combined as shown below in *Equation (8)* to determine the overall hourly systematic uncertainty for September 1, 1998. To determine the uncertainty of the sum of the measurements, the individual uncertainty estimates should be combined on the basis of absolute uncertainty (i.e., standard deviations) and not relative uncertainty (i.e., coefficient of variation).

$$S_b = \sum_{i=1}^{l_1}\sum_{j=1}^{m} S_{b_{ij\ \text{direction known}}} \pm \left[\sum_{i=1}^{l_2}\sum_{j=1}^{m} S^2_{b_{ij\ \text{direction unknown}}} + \sum_{i=1}^{l_3}\left(\sum_{j=1}^{m} S_{b_{ij\ \text{unknown but in same direction}}}\right)^2\right]^{\frac{1}{2}} \qquad \textit{Equation (8)}$$

Where:

S_b	=	Combined uncertainty or standard deviation of the flow measurement.
$S_{bij\ direction\ known}$	=	Absolute bias uncertainty of known direction for measurement *i,j*.

$S_{bij\ unknown\ but\ in\ same\ direction}$	=	Absolute bias uncertainty of unknown direction but known to occur in the same direction for each meter for measurement *i,j*.
$S_{bij\ direction\ unknown}$	=	Absolute bias uncertainty of unknown direction for measurement *i,j*.
m	=	The number of meters.
I_1, I_2, I_3	=	The number of uncertainty components in $S_{bij\ direction\ known}$, $S_{bij\ direction\ unknown}$, and $S_{bij\ unknown\ but\ in\ same\ direction}$, respectively.

For the first hour, using *Equation (8)*, the overall absolute bias uncertainty, S_b, was found to be ± 0.488 MGD, which corresponds to a relative uncertainty, CV_b, of ± 0.87 percent (i.e., ± 0.488 MGD divided by the total flow rate of 56 MGD). This process was repeated for each of the 24-hour readings taken during the day. The results are provided in Table 7 (table combining random and bias).

(2) Random Error

Only the SCADA uncertainty was identified as being random in nature. The manufacturer states that the analog-to-digital conversion can take place with an uncertainty of ± 1.25 percent of full scale. As mentioned earlier, it was assumed that full scale refers to full scale of the venturi-type meter. Thus, for venturi No. 6 with a capacity of ± 86 MGD, the absolute random uncertainty due to the SCADA system would be ± 1.08 MGD (± 0.0125 times 86 MGD). Hence, the relative uncertainty estimate for the SCADA system would be ± 1.92 percent (i.e., ± 1.08 MGD divided by 56 MGD).

Since only one meter was in operation for the first hour on September 1st, the overall random uncertainty is equal to the random uncertainty of meter No. 6 which is ± 1.08 MGD which corresponds to a relative random uncertainty, CV_r, ± 1.92 percent. If more than one meter was in operation the relative uncertainty estimates would be combined using the root-mean-square method to determine the relative random uncertainty. The results are provided in Table 7 (table combining random and bias).

(3) Combining Systematic and Random Errors

The systematic and random errors can be combined using the following methodology:

$$S_b = \sum_{i=1}^{l_1}\sum_{j=1}^{m} S_{b_{ij\,\text{direction known}}} \pm \left[\sum_{i=1}^{l_2}\sum_{j=1}^{m} S^2_{b_{ij\,\text{direction unknown}}} + \sum_{i=1}^{l_3}\left(\sum_{j=1}^{m} S_{b_{ij\,\text{unknown but in same direction}}}\right)^2 + \sum_{i=1}^{l_4}\sum_{j=1}^{m} S^2_{r_{ij}}\right]^{\frac{1}{2}} \qquad \textit{Equation (9)}$$

Where:

S_{rij}	=	Absolute random uncertainty.
l_4	=	The number of uncertainty components in S_{rij}.

Using *Equation (9)*, the overall uncertainty for the first hour of September 1, 1998, is ± 1.18 MGD, or ± 2.11 percent.

This process is repeated for each of the 24-hour readings taken during the day and the results can be seen in Table 7. The average uncertainty, *CV*, of an hourly flow measurement performed on September 1 was ± 2.11 percent. This implies that the 95 percent confidence interval, *CI*, for an hourly flow measurement would be ± 4.37 percent (±2.11 times 2.069). Over the entire study period, the average uncertainty of an hourly flow measurement, *CV*, was found to be -0.47 ± 1.87 percent. The average 95 percent confidence interval of an hourly flow measurement, *CI*, would then be equal to -0.47 ± 3.61 percent (-0.47 ±[1.87 times 1.960]).

Table 7
Systematic, Random, and Overall Uncertainty Estimates for Hourly Flow Measurements Made on September 1, 1998

Hour	Total Flow (MGD)	CV_b (%)	S_b (MGD)	CV_r (%)	S_r (MGD)	Overall *CV* (%)
1	56	± 0.87	± 0.488	± 1.92	± 1.075	± 2.11
2	56	± 0.87	± 0.488	± 1.92	± 1.075	± 2.11
3	56	± 0.87	± 0.488	± 1.92	± 1.075	± 2.11
4	55	± 0.88	± 0.483	± 1.92	± 1.075	± 2.14
5	56	± 0.87	± 0.488	± 1.92	± 1.075	± 2.11
6	57	± 0.86	± 0.493	± 1.92	± 1.075	± 2.07
7	57	± 0.86	± 0.493	± 1.92	± 1.075	± 2.07

Table 7
Systematic, Random, and Overall Uncertainty Estimates for Hourly Flow Measurements Made on September 1, 1998

Hour	Total Flow (MGD)	CV_b (%)	S_b (MGD)	CV_r (%)	S_r (MGD)	Overall CV (%)
8	57	± 0.86	± 0.493	± 1.92	± 1.075	± 2.07
9	56	± 0.87	± 0.488	± 1.92	± 1.075	± 2.11
10	56	± 0.87	± 0.488	± 1.92	± 1.075	± 2.11
11	56	± 0.87	± 0.488	± 1.92	± 1.075	± 2.11
12	56	± 0.87	± 0.488	± 1.92	± 1.075	± 2.11
13	56	± 0.87	± 0.488	± 1.92	± 1.075	± 2.11
14	56	± 0.87	± 0.488	± 1.92	± 1.075	± 2.11
15	56	± 0.87	± 0.488	± 1.92	± 1.075	± 2.11
16	56	± 0.87	± 0.488	± 1.92	± 1.075	± 2.11
17	56	± 0.87	± 0.488	± 1.92	± 1.075	± 2.11
18	56	± 0.87	± 0.488	± 1.92	± 1.075	± 2.11
19	56	± 0.87	± 0.488	± 1.92	± 1.075	± 2.11
20	56	± 0.87	± 0.488	± 1.92	± 1.075	± 2.11
21	56	± 0.87	± 0.488	± 1.92	± 1.075	± 2.11
22	55	± 0.88	± 0.483	± 1.92	± 1.075	± 2.14
23	55	± 0.88	± 0.483	± 1.92	± 1.075	± 2.14
24	55	± 0.88	± 0.483	± 1.92	± 1.075	± 2.14

B. Uncertainty of Daily Volume Measurements

An estimate of the uncertainty of the daily volume pumped through the station can be obtained from the 24 hourly flow measurements. The volume pumped through the 68th Station is the average of the 24 hourly flow measurements times one day. For September 1, 1998, the average volume pumped through the station is 56.0 million gallons (MG).

The uncertainty of the systematic daily volume measurements can be determined using the following equation:

$$CV_{Vb} = CV_{bV_{\substack{direction \\ known}}} + \frac{\Delta t}{m_v}\left(\sum_{k=1}^{n} Q_k^2 CV^2_{b_{k_{\substack{direction \\ unknown}}}} + \left(\sum_{k=1}^{n} Q_k CV_{b_{k_{\substack{unknown \\ but\ in\ same \\ direction}}}}}\right)^2\right)^{\frac{1}{2}}$$ *Equation (10)*

Where:

CV_{Vb}	=	Relative uncertainty of the total bias volume measurement.
$CV_{bV\ direction\ known}$	=	Bias with known direction of the total volume measurement.
$CV_{bk\ direction\ unknown}$	=	Bias error in individual flow measurement *k* where the bias direction is unknown.
$CV_{bk\ unknown\ but\ in\ same\ direction}$	=	Bias error in individual flow measurement *k* where the bias direction is unknown, but in the same direction for all meters.
Δt	=	Time increment.
Q_k	=	Value of flow measurement *k*.
m_V	=	Sum of all *n* volume measurements.

In this case, the uncertainty of the measured volume can be expressed in relative terms because the terms Q_k and m_V take into account the magnitude of the individual measurements.

Using *Equation (10)*, the relative systematic error, CV_{Vb}, was ± 0.33 percent for September 1, 1998.

The average random uncertainty component for the daily volume can be obtained from the following expression:

$$CV_{Vr} = \pm \frac{\Delta t}{m_v}\left(\sum_{k=1}^{n} Q_k^2 CV_{rk}^2\right)^{\frac{1}{2}}$$ *Equation (11)*

Where:

CV_{rk}	=	Random error in individual flow measurement *k*.
CV_{Vr}	=	Relative uncertainty of the volume measurement.

Using *Equation (11)*, the relative random uncertainty of the daily volume, CV_{vr}, for September 1, 1998, is ± 0.39 percent.

The overall uncertainty of the daily volume can then be found by combining the systematic and random uncertainty components in the following manner:

$$CV_V = CV_{bV_{\substack{direction \\ known}}} + \frac{\Delta t}{m_v}\left(\sum_{k=1}^{n} Q_k^2 CV_{b_{k_{\substack{direction \\ unknown}}}}^2 + \left(\sum_{k=1}^{n} Q_k CV_{b_{k_{\substack{unknown \\ but\ in\ same \\ direction}}}}}\right)^2 + \sum_{k=1}^{n} Q_k^2 CV_{r_k}^2\right)^{\frac{1}{2}} \qquad \textit{Equation (12)}$$

For the date in question, the overall uncertainty of the daily volume, CV_V, was found to be ± 0.52 percent, or ± 0.291 MG (± 0.52 percent times 56.0 MG). The 95-percent confidence interval on the daily volume, CI_v, would then be ± 1.08 percent (±0.52 times 2.069). Note that the 95-percent confidence interval for the daily volume (± 1.08 percent) is much narrower than the 95-percent confidence interval for the hourly flow measurement (± 4.37 percent). This is because the random errors and systematic errors with unknown direction associated with an hourly flow measurement are statistically canceled when they are summed over a day's time. The average random, systematic, and overall uncertainty for each day in each two-week study period were found using the above method. A summary of the daily volume uncertainties for the September 1998 study period appears in Table 8.

Table 8
Estimated Uncertainties for Daily Volumes in September 1998 Study Period

Date	CV_{Vb} (%)	CV_{Vr} (%)	CV_V (%)	CI_V (%)
September 1	± 0.33	± 0.39	± 0.52	± 1.08
September 2	-0.12 ± 0.50	± 0.40	-0.12 ± 0.64	-0.12 ± 1.32
September 3	-0.23 ± 0.56	± 0.39	-0.23 ± 0.68	-0.23 ± 1.41
September 4	-0.50 ± 0.42	± 0.34	-0.50 ± 0.54	-0.50 ± 1.12
September 5	-0.34 ± 0.56	± 0.36	-0.34 ± 0.66	-0.34 ± 1.37
September 6	-0.34 ± 0.54	± 0.35	-0.34 ± 0.64	-0.34 ± 1.33
September 7	-0.50 ± 0.42	± 0.34	-0.50 ± 0.54	-0.50 ± 1.12

Table 8
Estimated Uncertainties for Daily Volumes in September 1998 Study Period

Date	CV_{Vb} (%)	CV_{Vr} (%)	CV_V (%)	CI_V (%)
September 8	-0.50 ± 0.43	± 0.35	-0.50 ± 0.55	-0.50 ± 1.14
September 9	-0.50 ± 0.43	± 0.34	-0.50 ± 0.55	-0.50 ± 1.13
September 10	-0.50 ± 0.43	± 0.34	-0.50 ± 0.55	-0.50 ± 1.13
September 11	-0.50 ± 0.42	± 0.34	-0.50 ± 0.54	-0.50 ± 1.11
September 12	-0.50 ± 0.41	± 0.33	-0.50 ± 0.53	-0.50 ± 1.09
September 13	-0.60 ± 0.50	± 0.35	-0.60 ± 0.61	-0.60 ± 1.26
September 14	-0.50 ± 0.42	± 0.34	-0.50 ± 0.54	-0.50 ± 1.11

C. Uncertainty of Annual Volume Measurements

The uncertainty in the annual volume pumped through the station can be estimated using the estimated uncertainty in daily volume measurements. As mentioned earlier, the study period consisted of two-week periods in September 1998, and February and May of 1999. In total, there were 42 days in the study period. Over this time period, the average systematic uncertainty for a daily volume measurement, CV_b, was determined to be -0.47 ± 0.41 percent (± 0.12 percent from unknown biases and ± 0.39 percent from unknown biases known to be in the same direction for all meters) and the average random uncertainty for a daily volume measurement, CV_r, was estimated to be ± 0.35 percent. The average uncertainty in daily volume would then be -0.47 ± 0.54 percent, and the average 95-percent confidence interval for the daily volume would be -0.47 ± 1.12 percent. The uncertainty in the annual volume pumped through the 68th Station, CV_V can be determined as follows:

$$CV_V = CV_{b_{\substack{direction\\known}}} \pm \left(\frac{CV^2_{b_{\substack{direction\\unknown}}}}{n} + CV^2_{b_{\substack{unknown\\but\ in\ same\\direction}}} + \frac{CV_r^2}{n} \right)^{\frac{1}{2}}$$

$$= -0.47 \pm \left(\frac{0.12^2}{365} + 0.39^2 + \frac{0.35^2}{365} \right)^{\frac{1}{2}} = -0.47 \pm 0.39\%$$

Equation (13)

The 95-percent confidence interval of the annual volume, CI_v, would then simply be -0.47 ± 0.76 percent (-0.47 ±[0.39 times 1.960]). The 95-percent confidence interval for the annual volume (-0.47 ± 0.76 percent) is slightly less than the 95-percent confidence interval for the daily volume (-0.47 ± 1.12 percent). Most of the random error and unknown bias error associated with the daily volume measurement is statistically canceled when determining the uncertainty of the annual volume.

4. Quality Assurance

If the water accounting system is moved to the lakefront, there is a concern that if one of the direct diverter's flow measurement systems goes down, that there would be no way to measure the withdrawals from the lake. Thus, it is desirable that the direct diverters have a backup measurement system and, if possible, some other independent check on the measurements to ensure that the measurements are reasonable and accurate.

There are many backup systems at the 68th Station. If a problem is detected in a particular venturi meter or its corresponding pressure transmitter, that venturi meter and its pump can be shutdown and a different venturi and pump can be used in its place for metering and distribution.

The SCADA system used to totalize the flow consists of several elements. A schematic of the SCADA system showing the flow and storage of data is provided in Appendix B. The signal from each pressure transmitter is sent to a computer (CP2), located at the plant, where the flow data is displayed, processed and temporally stored. This computer is only capable of storing three days worth of data. Therefore, the control center computer system (CP3) located at the Jardine water treatment plant reads the data from the CP2 and is responsible for storing and maintaining the flow records. Note that if CP2 were to fail, the data would not be communicated to CP3. The CP3 central control computer system consists of two computers with automatic failover such that if one computer fails, the other one takes over automatically. Both of these computers store data from the pumping station so none of the data should be lost in the event that either computer fails. The data stored on CP3 is also backed up on tape.

The data is transferred from the CP2 computer at the plant to the CP3 computer at Jardine over a dedicated communication line (i.e. a telephone line). This communication line does not have a backup. However, since the CP2 at the station can store up to three days of data, no data will be lost if the line is repaired within 3 days.

If the SCADA system were to fail, there are no backup recorders at the station. Readings could, however, be obtained manually from the venturi's manometer. This data would then be manually inputted in the SCADA system once the problems with the SCADA system were corrected.

Unlike the stream-operated pumping stations, there are no chart recorders at the 68th Station. Thus, the 68th Station does not have this additional level of backup that the steam-operated stations do. Also, it is desirable to have an independent check on the flow measurement system employed by the 68th Station. The steam-operated stations can use the chart recorders as an independent check, however, the 68th Station does not have chart recorders, and thus there is no easily identifiable independent check on the flow measurement system.

5. Summary of Inadequacies in the Current Metering Systems

For the most part, the current metering system provided a reasonable level of accuracy and has acceptable quality assurance. There are a few areas of the metering system that appear to be deficient.

- The actual venturi meters are not calibrated. Rather, the City assumes that the manufacturer's rating curves are correct. Calibration of the venturi meters would confirm or deny this assumption.

- No backup data recorders exists. Therefore, should the SCADA system fail, flow data at the 68th Station could be lost. Further, without two data sources, any additional uncertainty due to the sampling accuracy cannot be determined.

- The overall accuracy in estimating the water supply pumpage is dependent upon many measurement and analysis functions. The documented technical review and much previous work were focused on the accuracy of the pumpage measurements in hardware (i.e., meters, calibrator, pressure transmitter, etc.) and software (SCADA, etc.). This analyses does not take into account procedural errors such as inconsistent data in water supply pumpage as a result of the reporting mechanism.

6. Recommendations for Long-Term QA/QC and Improvements to Metering

Recommendations for long-term QA/QC and improvements to metering are as follows:

- Calibration of the venturi meters to determine if the manufacturer's rating curves are valid.
- Occasional inspection and measurement, if physically possible, of the inlet and throat of the venturi meters to determine any possible presence and effects of corrosion and tuberculation on the meter's accuracy.
- Installation of a backup recording device.
- Routine auditing of various water withdrawal reports, as part of the long-term QA/QC, as a means of accounting for procedural errors.

7. Conclusions

Some of the important conclusions are summarized below:

- For operational purposes, the City can determine the hourly flow measurement reading to within -0.47 ± 3.61 percent at the 68th Station. This value takes into account the random and systematic uncertainty associated with the venturi meters, pressure transmitters, calibration equipment, and recording system.

- On an annual basis, the total volume pumped through the station can be determined to within -0.47 ± 0.76 percent. The 95-confidence interval for the annual volume is narrower than the 95-percent confidence interval for the hourly flow measurements made at the 68th Station because the random and unknown bias errors associated with the measurement are statistically canceled when the measurements are summed over a year's time.

- With the exception of the SCADA system, the entire metering system has redundancy or backup for quality assurance. There is no backup data recorder at this time.

- There is no independent check of the flow measurement system that can be used as an indicator when there is a problem within the system.

References

American Society of Mechanical Engineers, *Fluid Meters: Their Theory and Application*. ASME, New York, 6th ed., 1971.

Ametek Power Instruments, "Rochester DPG-700 Precision Digital Pressure Gauge," http://www.rochester.com/Products/RIS/dgp-700.htm.

Analog Input Module PPX:505-6108A Electrical Specification [for the SCADA system], date not provided.

City of Chicago. Written Correspondence between Conrad Bazylewski of the City of Chicago and F.L. Sommer of F.B. Leopold Company regarding the "Printed Accuracy Data on the Venturi Tubes and Simplex Flow Meters," March 16, 1977.

City of Chicago, Written Correspondence between R.W. Pence of the City of Chicago and David Clemmans of Energy Associates Inc. regarding the "BIF Flow Metering Equipment," August 18, 1977.

Foxboro Company. Telephone Conversation between Technical Support at the Foxboro Company and Nicole Grossen of Mead & Hunt, Inc. regarding the accuracy, stability, and temperature uncertainties of the Foxboro 823DP Series Differential Pressure Transmitters, Fall of 2000.

International Organization for Standardization, *Measurements of Fluid Flows by Means of Pressure Differential Devices*, ISO, Switzerland, 1991.

Mead & Hunt, Inc., *Technical Review of Lake Michigan Water Withdrawals by the City of Evanston–Draft*, July 2002.

Mead & Hunt, Inc., *Technical Review of Lake Michigan Withdrawals – Southwest Pumping Station*, July 2002.

Meriam Instrument, General Installation, Operation, and Maintenance Instructions for Meriam Manometers, April 1992.

Miller, Richard W., *Flow Measurement Engineering Handbook*, McGraw-Hill, New York, 1996.

Spitzer, David W., *Industrial Flow Measurement*. Instrument Society of America, North Carolina, 1990.

Final Report

Technical Review of Lake Michigan Withdrawals Southwest Pumping Station

City of Chicago

Prepared for:

U.S. Army Corps of Engineers – Chicago District
Chicago, Illinois

Prepared by:

MEAD & HUNT

August 2003

Table of Contents

Page

Executive Summary . . . . . E-i

1. General Description 1
   A. Summary of Operation 1
   B. Flow Measurement 1
   C. Flow Totalization 2
   D. Calibration 2

2. Uncertainty in Metering and Measurement Components 3
   A. Venturi-Type Meters 3
   B. Pressure Taps 4
   C. Meter Installation 4
   D. Sampling 6
   E. Pressure Differential Measurement 7
   F. Dry Calibration of Pressure Transmitters 8
   G. SCADA System 9

3. Sample Uncertainty Calculation for Effluent Meters 10
   A. Uncertainty of Hourly Flow Measurements 10
      (1) Systematic (Bias) Error 10
      (2) Random Error 16
      (3) Combining Systematic and Random Errors 17
   B. Uncertainty of Daily Volume Measurements 18
   C. Uncertainty of Annual Volume Measurements 21

4. Quality Assurance 22

5. Summary of Inadequacies in the Current Metering Systems 23

6. Recommendations for Long-Term QA/QC and Improvements to Metering 24

7. Conclusions 25

References 26

List of Tables

Table		Page
1	Specifications of Flow Measurement Devices Used at the Southwest Station	1
2	Upstream Disturbances and Approximate Approach Lengths for the Various Venturi Meters at the Southwest Station	5
3	Summary of Required and Actual Downstream Straight Pipe Lengths at the Central Park Station	6
4	Results of the Random Complete Block Design Comparisons for the Mayfair, Central Park, Roseland, Springfield, and Western Pumping Stations	6
5	Summary of Flow Characteristics for the First Hourly Reading on September 1, 1998	12
6	Uncertainty From Pressure Transmitters and Calibration Equipment for the First Hourly Readings on September 1, 1998, for Venturi No. 1	13
7	Absolute Bias Estimates for the First Hourly Readings Taken on September 1, 1998	15
8	Systematic, Random, and Overall Uncertainty Estimates for Hourly Flow Measurements Made on September 1, 1998	17
9	Estimated Uncertainties for Daily Volumes in September 1998 Study Period	20

Appendix

A Schematic of the Southwest Pumping Station

B Schematic of the SCADA System

Executive Summary

Currently, diversion of water from Lake Michigan for the state of Illinois is measured at the Chicago Sanitary and Ship Canal at Romeoville. The Great Lakes Mediation Memorandum of Understanding established a lakefront diversion accounting system and specified a 3-year transition period to assess the technical acceptability of moving the diversion measurement system to the lakefront. A lakefront diversion accounting system requires metering of all domestic water withdrawals from Lake Michigan and the direct diversions into the Chicago Sanitary and Ship Canal system at the Chicago River, the Calumet River, and the North Shore Channel at Wilmette. During the 3-year transition period, the U.S. Army Corps of Engineers (USACE) has been tasked to initiate a technical review of the accuracy of the reported domestic withdrawals from Lake Michigan.

The USACE retained Mead & Hunt, Inc., to evaluate the accuracy of domestic withdrawals from Lake Michigan. A total of 12 pumping stations in the city of Chicago (City) and six suburban pumping stations will be evaluated. These evaluations include revisions to the investigations conducted on the City's Mayfair and Thomas Jefferson Stations and the city of Evanston's Station by the Illinois District of the U.S. Geological Survey. This report presents a summary of the flow measurement techniques at the Southwest Station as employed by the City, as well as an estimate of the uncertainty of daily and annual volume measurements. Presently, the Southwest Station consists of six electrically operated pumps and six venturi-type meters.

To obtain an estimate of the uncertainty of an individual flow measurement, we examined the manufacturer's accuracy specifications for both the primary flow measurement devices (i.e., the venturi-type meters) and secondary measurement devices (i.e., the pressure transducers). The Southwest Station's calibration technique, sampling technique, and device installation were also examined. All of the sources of uncertainty identified from this analysis were then classified as either random or systematic in nature. Using this information and the data logs provided by the City, we obtained an estimate of the uncertainty of an individual flow measurement. From this information, an estimate of the uncertainty of the daily and annual volume withdrawn from the lake can be obtained using standard statistical techniques.

Some of the important conclusions are summarized below:

- For operational purposes, the City can determine the hourly flow measurement reading to within ± 3.68 percent at the Southwest Station. This value takes into account the random and systematic uncertainty associated with the venturi meters, pressure transmitters, calibration equipment, and recording system.

- On an annual basis, the total volume pumped through the station can be determined to within ± 0.84 percent. The 95-percent confidence interval for the annual volume is narrower than the 95-percent confidence interval for the hourly flow measurements made at the Southwest Station

because the random and unknown bias errors associated with the measurement are statistically canceled when the measurements are summed over a year's time.

- With the exception of the SCADA system, all of the metering system has redundancy or backup for quality assurance. There is no backup data recorder at this time.

- There is no independent check of the flow measurement system that can be used as an indicator when there is a problem within the system.

Technical Review of
Lake Michigan Withdrawals
Southwest Pumping Station

City of Chicago

1. General Description

A. Summary of Operation

The Southwest Pumping Station (Southwest Station) is an electrically operated plant consisting of six pumps and six venturi-type meters. Each pump's flow is dedicated to a specific venturi-type meter. The pressure differentials on the meters are measured using Rosemount or Foxboro pressure transmitters. The output signals from the pressure transmitters are sent to the Supervisory Control and Data Acquisition (SCADA) system. The SCADA system samples the pressure transmitter signals every minute. These 1-minute readings are then used to determine the average daily volume pumped through any given venturi meter. No backup recording system to the SCADA system exists at the Southwest Station. A schematic of the Southwest Station is provided in Appendix A.

B. Flow Measurement

The Southwest Station uses six venturi-type meters to measure the flow pumped through the station. Meter No. 1 through 4 are BIF venturi-type meters and were installed in 1960. Meter No. 5 is a PFS meter and was installed in 1997; whereas, meter No. 6 is a Henry Pratt meter and was installed in 1991. Specifications of the six venturi-type meters are shown in Table 1.

Table 1
Specifications of Flow Measurement Devices Used at the Southwest Station

Venturi No.	Mfg.	Model No.	Approach Pipe Diameter (inches)	Throat Diameter (inches)	β-Ratio	Coefficient of Discharge	Max. Flow Rate (MGD)*	Max. Differential Pressure (in. Water)
1	BIF	MOUAX	42	27.0	0.6428	0.9846	100	241.79
2	BIF	MOUAX	42	27.0	0.6428	0.9846	100	241.79
3	BIF	MOUAX	42	27.0	0.6428	0.9846	100	241.79
4	BIF	MOUAX	42	27.0	0.6428	0.9846	100	241.79
5	PFS	HVT-CI	42	26.9	0.6413	0.9901	100	241.79
6	Henry Pratt	SX23	42	27.2	0.6484	0.9641	100	241.79

** Million gallons per day*

C. Flow Totalization

A SCADA system is used for flow totalization at the Southwest Station. First, the output from the pressure transmitters is sent to the SCADA system. The SCADA system samples the output every minute. The pressure transmitters' signal is divided by an integrator constant to convert it to a volume measurement. The sum of the 1,440, 1-minute readings is then used to determine the volume pumped through the system on a daily basis.

There are no backup chart recorders at the Southwest Station; however, if the SCADA system were to fail, readings could be obtained directly from the venturi manometers.

D. Calibration

An effective calibration procedure should calibrate both the primary flow meter and its secondary measurement device. First, the secondary measurement device, such as a pressure transmitter, should be calibrated to ensure it is reading correctly. Then, the flow meter itself should be calibrated to ensure it is functioning properly. The City does not perform any wet calibrations on the primary flow meters or their secondary measurement devices. Thus, all of the City's calibrations can be considered inferential in nature. The secondary measurement devices (i.e., the pressure transmitters, totalizers, etc.) are dry-calibrated once a year. If the City notices a problem or discrepancy, the instruments are checked; repaired, if necessary; and calibrated. If these tasks cannot be completed immediately, the unit is taken out-of-service until it can be repaired and calibrated. When a pressure transmitter or totalizer is calibrated, a full dry-calibration is performed using the Rochester DPG-700 pressure gauge. This pressure gauge provides a "calibrated" differential pressure that can be used to determine if the pressure transmitter or totalizer is reading properly. For the primary flow measurement devices, the City assumes the manufacturers' rating tables are correct.

After all the individual instruments have been dry-calibrated, the City performs an end-to-end calibration of the pumping station. When an end-to-end calibration is performed, the venturi-type meters are connected to manometers in order to obtain the pressure differentials. After an hour has passed, the volume measured by the manometer readings is compared to the volume measured by the totalizer. The City wants the difference between these two readings to be less than 2 percent for both the totalizer and instantaneous readings. This type of calibration is done to ensure that all the secondary measurement devices are working together properly.

During the calibration, the City takes readings from the Meriam manometers and from the calibrated flow signal over a period of time, typically at least 1 hour. The averages of both sets of data are compared and if a significant difference in readings is detected, the calibrators are sent out for re-calibration and re-certification. The last re-calibration was April 2000. According to the manometer's specifications, the "NIST recognizes the U-type manometer as a primary standard due to its inherent accuracy and simplicity of operation." The manometers do not require calibration; therefore, comparing the values from the calibrated flow signal to the manometer's readings is a reasonable method of checking whether the calibrators should be re-certified.

2. Uncertainty in Metering and Measurement Components

A. Venturi-Type Meters

According to manufacturer's specifications, the four BIF venturi tubes (meter Nos. 1 through 4) have an uncertainty of ± 0.75 percent of the actual rate for the top 90 percent of the meter's flow range. The PFS meter (meter No. 5) has an uncertainty of ± 0.50 percent of the actual rate, and the Henry Pratt meter (meter No. 6) has an uncertainty of ± 0.75 percent of the actual rate. Since the BIF meter Nos. 1 through 4 have been in use for 40 years, a possibility of pitting, tuberculation, and corrosion in the critical areas exists.
Meter Nos. 5 and 6 are relatively new, having been installed in the 1990s, and thus are assumed to not have any additional uncertainty due to corrosion or tuberculation.

On November 19, 1997, venturi No. 1 was inspected at the Southwest Pumping Station by the City. Measurements of the inlet and throat diameter indicated that the diameters had decreased 0.151 inches and 0.028 inches, respectively. The narrowing of the inlet piping was approximately fives times the narrowing of the venturi throat. This would suggest that the throat of the venturi is likely lined with bronze, which is known for its ability to resist corrosion and formation of tubercles.

To further this investigation, we conducted a literature review of the effects of corrosion and tuberculation on venturi accuracy. Cheremisinoff stated that "accuracy remains constant over long-term services because discharge coefficients show minimum effect from . . . changes in surface roughness of the device caused by erosion or corrosion." According to Stanley Peerman Hutton, the coefficient of discharge, *C*, is expressed as:

$$C = \left(\frac{1 - m^2}{a_2 + K_L - a_1 m^2} \right)^{\frac{1}{2}} \qquad \textit{Equation (1)}$$

where K_L is the nozzle loss coefficient, m is the contraction ratio equal to β^2, a_1 is the kinematic energy coefficient at the inlet or 1.04 and a_2 is the kinematic energy coefficient at the throat. Differentiating *Equation (1)* with respect to m results in:

$$\frac{\partial C}{\partial m} = -\frac{mC}{1 - m^2}\left(1 - a_1 C^2\right) \qquad \textit{Equation (2)}$$

By solving *Equation (2)* for $\Delta C/C$ and using the measurements taken at the Southwest Station by the City, the change in the discharge coefficient can be determined using the following equation:

$$\frac{\Delta C}{C} = -\frac{m^2}{\left(1-m^2\right)} \cdot \frac{\Delta m}{m} \cdot \left(1 - a_1 C^2\right)$$ *Equation (3)*

where:

$$\frac{\Delta m}{m} = \frac{(27.000-0.028)^2}{(42.000-0.151)^2} \cdot \frac{(42)^2}{(27)^2} - 1 = 0.00514$$ *Equation (4)*

$$\frac{\Delta C}{C} = -\frac{0.6428^4}{\left(1-0.6428^4\right)} \cdot 0.00514 \cdot \left[1-(1.04)(0.9846)^2\right] = 8.7 \cdot 10^{-6}$$ *Equation (5)*

The change in discharge coefficient is very small. This fact is expressed by Stanley Peerman Hutton. "It will be found that changes in C caused by variation in m should be very small (because $1-a_1 C^2 \approx 0$)." Given these findings, the uncertainty due to corrosion and tuberculation is negligible.

B. Pressure Taps

The pressure taps that are used to measure the pressure differential should be square with no roughness, burrs, or wire edges (Miller, 1996). If the pressure taps that are used do not meet these requirements, then a bias error would be introduced. The flow measurement devices were all constructed under a controlled manufacturing environment with very little opportunity for a pressure tap to be constructed poorly. Thus, we assumed that the manufacturer constructed the pressure taps correctly and that no additional error would be introduced due to the pressure taps.

C. Meter Installation

An appropriate length of straight, circular pipe is required upstream of the flow meter to guarantee that the velocity profile entering the meter is not distorted and that the meter will perform properly. The length of this approach section depends on number and types of bends and fittings located upstream of the meter.

Table 2 lists the approximate approach length and upstream fittings for the various venturi meters located at the Southwest Pumping Station. The "Required Approach Length for Zero Error" values reported in Table 2 were taken from ISO 5167-1:1991. All six meters at the Southwest Station have the required minimum lengths for the first two upstream lengths of pipe. Therefore, no additional error due to installation will be required for this analysis.

Table 2
Upstream Disturbances and
Approximate Approach Lengths for the
Various Venturi Meters at the Southwest Station

Venturi No.	First Upstream Fitting	First Upstream Approach Length (feet)	Required Pipe Length for Zero Error (feet)	Second Upstream Fitting	Second Upstream Approach Length (feet)	Required Pipe Length for Zero Error (feet)
1	90° bend	20.1	14.0	Unknown	59.3	N/A*
2	90° bend	17.8	14.0	Unknown	59.3	N/A*
3	90° bend	19.4	14.0	Valve	18.7	9.6
4	90° bend	18.5	14.0	Unknown	59.3	N/A*
5	90° bend	21.1	14.0	Unknown	59.3	N/A*
6	90° bend	18.4	14.0	Unknown	59.3	N/A*

* *Although the type of fitting is unknown, the approach length exceeds the required pipe length for any type of fitting.*

Inadequate straight piping downstream of the meter can also affect the accuracy of the meter. ISO 5167-1:1991 reference materials indicate that as long as the downstream length of straight piping exceeds four times the meter's throat diameter, no additional error is expected. Unlike for the upstream piping lengths, the ISO 5167-1:1991 reference does not indicate what length would be required to provide an uncertainty of 0.5 percent or any other uncertainty value. The required and actual downstream lengths of straight pipe is summarize in Table 3. As shown in Table 3, Meter Nos. 1, 2 , 4, and 5 do not have adequate lengths of downstream piping to ensure no additional error due to downstream piping geometry. Although, these downstream lengths do not meet downstream piping requirement of four throat diameters, no error value is available in the ISO 5167-1:1991 reference. Therefore, although additional error may be present due to the downstream piping of meter Nos. 1, 2, 4, and 5, it cannot be quantified and included in the actual uncertainty calculations.

Table 3
Summary of Required and Actual Downstream Straight Pipe Lengths at the Central Park Station

Venturi No.	Throat Diameter (feet)	Required Downstream Pipe Length for Zero Error (feet)	Actual Downstream Pipe Length (feet)	Meets Required Downstream Pipe Length?
1	2.25	9.00	8.7	No
2	2.25	9.00	8.7	No
3	2.25	9.00	9.0	Yes
4	2.25	9.00	8.7	No
5	2.25	9.00	5.3	No
6	2.25	9.00	10.0	Yes

D. Sampling

Additional uncertainty can also be introduced due to how the flow measurement data is recorded. If, for example, a quantity varies sinusoidally, but that quantity is only measured at the times when the quantity is at a peak, then the average measurements will be higher than the true average. This would introduce a bias into the system. On the other hand, if a quantity is measured or sampled frequently, then there will be very little error introduced due to the sampling. The flow rates at the Southwest Station are sampled every minute, and these 1-minute sample readings are used to determine the average daily volume pumped through the station. Unlike some of the other Chicago stations, there are no recorders to compare the 1-minute readings at the Southwest Station. Thus, the Southwest Station data alone is not sufficient to determine whether the 1-minute readings are adequate.

The Mayfair, Central Park, Roseland, Springfield, and Western Pumping Stations all have average daily flows from chart recorder data to compare to their instantaneous 1-hour SCADA readings. A randomized complete block design was performed on the data for these five stations and their results are provided in Table 4.

Table 4*
Results of the Random Complete Block Design Comparisons for the Mayfair, Central Park, Roseland, Springfield, and Western Pumping Stations

Station	Number Without Statistical Difference	Number With Statistical Difference
Central Park	2	4
Mayfair	25	3
Roseland	4	7

Table 4*
Results of the Random Complete Block Design Comparisons for the Mayfair, Central Park, Roseland, Springfield, and Western Pumping Stations

Station	Number Without Statistical Difference	Number With Statistical Difference
Springfield	5	1
Western	6	0

* Note that the number of tests for each station is dependent on the number of meters used during the study periods. For instance, Central Park used two meters for each 2-week study period for a total of six tests (two meters times three 2-week study periods.)

As shown in Table 4, the results are not consistent among the five stations tested. The results from the Mayfair, Springfield, and Western Stations indicate that in more cases than not there is no statistical difference between averages. The opposite is true for the Central Park and Roseland Stations. However, the statistical comparison was between the average daily volume from the chart recorder and average of 24, 1-hour instantaneous SCADA readings, since 1-minute SCADA readings were not available. The actual daily flow volume that is recorded for LMO reporting is based on 1-minute readings. Therefore, a possibility still exists that the chart recorder's daily average flow and the SCADA's daily flow based on 1-minute readings could be statistically the same.

It is assumed that sampling frequency does not produce an additional source of error at the Southwest Station since the combined results from the Mayfair, Central Park, Roseland, Springfield, and Western Pumping Stations indicate that it is more likely than not that sampling frequency at the Southwest Station is adequate.

E. Pressure Differential Measurement

The pressure differentials for meter Nos. 1 through 4 are measured using Foxboro 823DP pressure transmitters, for meter No. 5 using Rosemount 1151 Smart pressure transmitters, and for meter No. 6 using Foxboro IDP10-A22 pressure transmitters.

In conversations with technical support at Foxboro, it was determined that the significant uncertainty components for the Foxboro 823DP transmitters include accuracy, stability, and temperature effect. According to Foxboro, these 823DP pressure transmitters have an accuracy of ± 0.2 percent of the calibrated span, a stability of ± 0.1-percent reference span, and a temperature effect of ± 0.125 percent of reference span per 100 degrees F. The calibrated span of meter Nos. 1 through 4 is 241.79 inches of water. Given this information, it is assumed that meter Nos. 1 through 4 have a high range sensor. Based on this assumption and information provided by Foxboro, the reference span for meter Nos. 1 through 4 would be 500 inches of water.

Based on the Rosemount 1151 Smart Transmitter's performance specifications, these pressure transmitters have an accuracy of ± 0.1 percent of the calibrated span. In conversations with technical support staff at Fisher-Rosemount, this accuracy includes effects caused by hysteresis, dead band, linearity, and repeatability. The Rosemount 1151 Smart transmitters have a stability of ± 0.1 percent URL and a temperature effect of ± (0.2 percent upper range limit (URL), plus 0.18 percent of calibrated span) per 100 degrees F. The URL of the Rosemount 1151 Smart transmitters is 750 inches of water. The calibrated span is 241.79 inches of water.

Meter No. 6 uses Foxboro IDP10-A22 pressure transmitters. Based on conversations with technical support at Foxboro, it was determined that the significant uncertainty components for the Foxboro IDP10-A22 transmitters include accuracy, stability, and temperature effect. According to Foxboro, these IDP10-A22 pressure transmitters have an accuracy of ± 0.2 percent of the calibrated span, a stability of ± 0.2 percent upper range limit (URL), and a temperature effect of ± 0.125 percent of URL per 100 degrees F. The calibrated span of meter No. 6 is 241.79 inches of water and the URL is 840 inches of water.

The lake temperature varies from about 32 to 70 degrees F. This is approximately a 40-degree F temperature range. It is assumed that the specifications provided by the manufacturers are correct. The combination of these errors is considered to be systematic in nature. The direction of this bias is unknown.

F. Dry Calibration of Pressure Transmitters

The secondary measurements devices (i.e., pressure transmitters) are calibrated once a year using a Rochester DPG-700 module. Because the pressure transmitter is adjusted to the Rochester DPG-700 reading, all of the uncertainty components of the Rochester DPG-700 module will become a bias reported by the pressure transducer. Since both pressure and current readings are taken from the Rochester DPG-700 module during calibration, two independent accuracy values apply. For the pressure reading, the accuracy is reported to be ± 0.05 percent of full scale plus one digit of display. Based on manufacturer's specifications, the pressure display is shown to 0.002 pounds per square-inch gauge (PSIG), which is equal to 0.055 inches of water. The range of the Rochester DPG-700 module is 0 to 30 pounds per square inch ([psi] or 830.80 inches of water). The current reading's uncertainty is reported as ± 0.05 percent of full scale plus one digit of display. The upper range limit for the current is 50 mA. The current resolution is 0.005 mA. The direction of these biases, although unknown, will be in the same direction for all six meters in the Southwest Station, assuming that all six pressure transmitters are calibrated with the same DPG-700 module.

G. SCADA System

In order for the SCADA system to determine the volume pumped through the Southwest Station, the analog signal from the pressure transmitter was converted to a digital signal using an analog input module. The manufacturer's specifications state that the analog-to-digital conversion is accurate to within ± 1.25 percent of full scale over operating range, and to within ± 0.7 percent of full scale at 25 degrees C. Since the water temperature varies from 32 to 70 degrees F, the uncertainty value of ± 1.25 percent of full scale over operating range will be used. In this case, the full scale was assumed to be the full scale of the venturi-type meter to which the pressure transmitter was connected. The error due to the analog to digital conversion is random in nature.

3. Sample Uncertainty Calculation for Effluent Meters

To demonstrate how the uncertainty of the measured volume pumped through the Southwest Station was estimated, a series of sample calculations follows. The method used to estimate the uncertainty is similar to that described in the *Technical Review of Lake Michigan Water Withdrawals by the City of Evanston*. Please refer to this document for background on the statistical handling of measurement uncertainty.

The City provided the hourly logs of three 2-week periods. These time periods were the first 14 days in September 1998, and February and May 1999. There were some periods of missing data due to the SCADA system being down. These missing periods were estimated based on data trends. In reviewing the data, it was apparent that some hourly values were not constant over the entire hour. For example, if during an hour block, the meter was pumping 60 million gallons per day (MGD) but only pumping half an hour, the average flow for that hour would be one-half of the pumped flow, or 30 MGD. Using the 30 MGD would incorrectly cause the metering uncertainty to be greater because 30 MGD is significantly less than the optimum flow range of the metering system. Therefore, any data points that appeared not to be constant flow over the entire hour were changed to zero. It was assumed that the Southwest Station's pumpages over these time periods were representative of the typical pumpages. The uncertainty of the hourly and daily readings can be obtained using these assumptions. The uncertainties can be reported as standard deviation of the measurements (expressed by the variable *s*) or in relative terms (expressed by the variable *CV*, which is the standard deviation divided by the mean of the measurements).

A. Uncertainty of Hourly Flow Measurements

(1) Systematic (Bias) Error

The majority of the error components are systematic in nature. These systematic errors include error from the venturi, inadequate approach length, the pressure transmitters, and the calibration equipment. To determine the uncertainty of the hourly flow measurements, all uncertainties need to be in terms of percent accuracy of actual rate. The errors associated with the venturi are already expressed in these terms. However, the accuracy associated with the pressure transmitters and calibration equipment are in terms of percent accuracy per calibrated span, upper range limit (URL), full scale (FS), or a combination of these.

The standard equation for the flow through a venturi-type meter is:

$$Q = \frac{C_d A_t}{\sqrt{1-\beta^4}} \sqrt{2g\Delta h}$$ *Equation (6)*

Where:

Q	=	Flow rate
C_d	=	Discharge coefficient
A_t	=	Area of the throat section
β	=	Ratio of the throat diameter to the approach section diameter (also referred to as the beta ratio)
g	=	Acceleration due to gravity
Δh	=	Pressure differential across the meter

Based on manufacturer information, the C_d values for the venturi meters range from 0.9641 to 0.9901, depending on the particular meter.

At the Southwest, each venturi meter is dedicated to a single pump. For illustration of the uncertainty calculations, we will be examining the pumping characteristics for September 1, 1998. On this day, only pump No. 1 was routed through its respective venturi meter.

The throat area, A_t, for venturi meters No. 1 is:

$$A_t = \frac{\Pi(27.0)^2}{4} = 572.6in^2 = 3.978ft^2 \qquad \textit{Equation (7)}$$

For the first hour on September 1, 1998, 68 MGD was pumped through meter No. 1. The pressure differential for venturi No. 1 is calculated below using *Equation (6)*, and the β-ratio of 0.6428 from Table 1.

$$\Delta h = \left[\frac{Q\sqrt{1-\beta^4}}{C_d A_t \sqrt{2g}}\right]^2 = 12\left[\frac{1.547(68MGD)\sqrt{1-(0.6428)^4}}{(0.9890)(4.909ft^2)\sqrt{2(32.16ft/s^2)}}\right]^2 = 111.60in. \qquad \textit{Equation (8)}$$

The values of 12 and 1.547 that appear in *Equation (8)* are unit conversion factors to convert feet to inches and MGD to cubic feet per second (cfs), respectively. A summary of flow characteristics for the first hourly reading of meter No. 1 on September 1 appears in Table 5.

Table 5
Summary of Flow Characteristics for the First Hourly Reading on September 1, 1998

Venturi No.	Throat Area (sq. ft.)	Flow Rate (MGD)	Computed Pressure Differential (in. Water)
4	3.978	68	111.60

The pressure differential of meter No. 1 is measured using Foxboro 823DP pressure transmitters. Based on the manufacturer's performance specifications, these pressure transmitters have an accuracy of ± 0.2 percent of the calibrated span, a stability of ± 0.1 percent reference span, and a temperature effect of ± 0.125 percent of 100 degrees F. The calibrated span of venturi No. 1 is 241.79 inches of water and the reference span is 500 inches of water. Thus, the uncertainty in the pressure differential measurement due to accuracy would be ± 0.484 inches of water (i.e., ± 0.002 times 241.79) for venturi meter No. 1. The uncertainty in the flow rate due to the accuracy of the pressure transmitter for venturi meter No. 1 would then be:

$$CV_{Qa} = \frac{Xs_p}{\Delta h} = \frac{(0.5)(\pm 0.484in)}{111.60in} = \pm 0.217\% \qquad \textit{Equation (9)}$$

where CV_{Qa} is the uncertainty in the flow rate due to the accuracy of the pressure transmitter, s_p is an uncertainty in the pressure transmitter (due to transmitter accuracy in this case), X is the sensitivity coefficient equal to 0.5 for the pressure transducer as the flow is directly proportional to the square root of pressure differential in *Equation (6)*, and Δh is the pressure differential. See *Technical Review of Lake Michigan Water Withdrawals by the City of Evanston* for additional information on the sensitivity coefficient, X. The uncertainty in the flow rate due to the transmitter's stability and temperature effect for meter No. 1 is shown in Table 5.

The pressure transmitters are calibrated using a Rochester DPG-700 calibrator. Since both pressure and current readings are taken from the calibrator, two independent accuracy values apply. For the pressure reading, the accuracy is reported to be ± 0.05 percent of full scale, plus one digit of display. Based on manufacturer's specification, the pressure display is shown to 0.002 PSIG, which is equal to 0.055 inches of water. The range of the Rochester DPG-700 module is 0 to 30 psi (or 830.80 inches of water). Thus, the uncertainty in the pressure component of the calibrator would be ± 0.470 inches of water (i.e., ± 0.0005 times 830.80, plus 0.055) for venturi meter No. 1. The uncertainty in the flow rate due to pressure component of the calibrator for venturi meter No. 1 would then be:

$$CV_{Qa} = \frac{Xs_p}{\Delta h} = \frac{(0.5)(\pm 0.470in)}{111.60in} = \pm 0.211\% \qquad \textit{Equation (10)}$$

The current reading's uncertainty is reported as ± 0.05 percent of full scale, plus one digit of display. The upper range limit for the current is 50 mA. The current resolution is 0.005 mA. Thus, the uncertainty in the current component of the calibrator would be ± 0.030 mA (i.e., ± 0.0005 times 50, plus 0.005) for venturi meter No. 1. The uncertainty in the flow rate due to the current component of the calibrator for venturi meter No. 1 would then be:

$$CV_{Qa} = \frac{Xs_i}{\Delta i} = \frac{(1.0)(\pm 0.030mA)}{14.9mA} = \pm 0.201\% \qquad \textit{Equation (11)}$$

Where:

s_i	=	Uncertainty due to the current reading for the calibrator pressure differential
Δi	=	Current differential

The current differential is known to be linear to the flow rate with 4 mA corresponding to zero flow, and 20 mA corresponding to flow meter capacity, which is 100 MGD for meter No. 1. Using this relationship, for the first hour on September 1, the corresponding currents would be 14.9 mA for meter No. 1. Note that for this calculation, the sensitivity coefficient, *X*, is 1.0 since the flow rate is directly proportional to the current (i.e., a linear relationship). A summary of these estimates appears in Table 6.

Table No. 6
Uncertainty From Pressure Transmitters and Calibration Equipment for the First Hourly Readings on September 1, 1998 for Venturi No. 1

Venturi No.	Instrument	Uncertainty Source	CV for Δh or ΔmA	URL or Calibrated Span	Uncertainty for Δh or ΔmA	CV for Flow (%)
1	Foxboro	Pressure transmitter	0.2% of calibrated span	241.79 in. water	0.484 in. water	± 0.217
1	Foxboro	Pressure transmitter	0.1% of reference span	500 in. water	0.500 in. water	± 0.224
1	Foxboro	Pressure transmitter	0.125% of reference span/100°F	500 in. water	0.250 in. water	± 0.112
1	DPG-700	Calibrator	0.05% FS + 1 digit*	830.8 in. water	0.470 in. water	± 0.211

Table No. 6
Uncertainty From Pressure Transmitters and
Calibration Equipment for the First Hourly Readings on September 1, 1998
for Venturi No. 1

Venturi No.	Instrument	Uncertainty Source	CV for Δh or ΔmA	URL or Calibrated Span	Uncertainty for Δh or ΔmA	CV for Flow (%)
1	DPG-700	Calibrator	0.05% FS + 1 digit**	50 mA	0.030 mA	± 0.201

* *One digit is equal to 0.055 in. water*
** *One digit is equal to 0.005 mA*

In this study, the bias uncertainty estimates were broken down into three categories:

- Bias uncertainty with a known bias direction.
- Bias uncertainty with an unknown bias, but known to be in the same direction for each meter.
- Bias uncertainty with an unknown bias direction.

Explanation of this breakdown was detailed in the *Technical Review of Lake Michigan Water Withdrawals by the City of Evanston*. Table 7 lists the type of bias uncertainty for each of the bias estimates for the first hourly readings for venturi meter No. 1. Additionally, Table 7 also provides the absolute bias estimates for the first hourly readings taken from venturi meter No. 1 based on the following equation:

$$s_b = CV_{flow} \cdot Q_{\substack{first \\ hour}} = \pm(0.00217)(68\,MGD) = \pm 0.148\,MGD \qquad \textit{Equation (12)}$$

where S_b is the standard deviation (or absolute uncertainty) of the flow measurement due to the respective systematic uncertainty estimate, CV_{flow} is the relative uncertainty in the flow rate and $Q_{\substack{first \\ hour}}$ is the flow for the first hour.

Table 7
Absolute Bias Estimates for the First Hourly Readings
Taken on September 1, 1998

Venturi No.	Bias Component	Type of Bias	CV_b(%)	S_b (MGD)
1	Venturi			
	– *Manufacturer*	Direction unknown	± 0.750	± 0.510
	Approach lengths	N/A	N/A	N/A
	Pressure transmitters			
	– *Accuracy*	Direction unknown	± 0.217	± 0.148
	– *Stability*	Direction unknown	± 0.224	± 0.152
	– *Temperature*	Direction unknown	± 0.112	± 0.076
	Calibrator			
	– *Pressure*	Direction unknown,	± 0.211	± 0.143
	– *Current*	but in same direction	± 0.201	± 0.137
		for all meters		

The systematic uncertainty estimates for meter No. 1 can be combined as shown below in *Equation (13)* to determine the overall hourly systematic uncertainty for September 1, 1998. To determine the overall uncertainty, the individual uncertainty estimates should be combined on the basis of absolute uncertainty (i.e., standard deviations) and not relative uncertainty (i.e., coefficient of variation).

$$S_b = \sum_{i=1}^{l_1}\sum_{j=1}^{m} S_{b_{ij\,\text{direction known}}} \pm \left[\sum_{i=1}^{l_2}\sum_{j=1}^{m} S^2_{b_{ij\,\text{direction unknown}}} + \sum_{i=1}^{l_3}\left(\sum_{j=1}^{m} S_{b_{ij\,\text{unknown but in same direction}}}\right)^2\right]^{\frac{1}{2}} \qquad \textit{Equation (13)}$$

Where:

S_b	=	Combined uncertainty or standard deviation of the flow measurement.
$S_{bij\ direction\ known}$	=	Absolute bias uncertainty of known direction for measurement *i,j*
$S_{bij\ unknown\ but\ in\ same\ direction}$	=	Absolute bias uncertainty of unknown direction but known to occur in the same direction for each meter for measurement *i,j*
$S_{bij\ direction\ unknown}$	=	Absolute bias uncertainty of unknown direction for measurement *i,j*
m	=	The number of meters
I_1, I_2, I_3	=	The number of uncertainty components in $S_{bij\ direction\ known}$, $S_{bij\ direction\ unknown}$, and $S_{bij\ unknown\ but\ in\ same\ direction}$, respectively

For the first hour, using *Equation (13)*, the overall absolute bias uncertainty was found to be ± 0.592 MGD, which corresponds to a relative uncertainty of ± 0.87 percent (i.e., ± 0.592 MGD divided by the total flow rate of 68 MGD). This process was repeated for each of the 24-hour readings taken during the day. The results are provided in Table 8.

(2) Random Error

Only the SCADA uncertainty was identified as being random in nature. The manufacturer states that the analog-to-digital conversion can take place with an uncertainty of ± 1.25 percent of full scale. As mentioned earlier, it was assumed that full scale refers to full scale of the venturi-type meter. Thus, for venturi No. 1 with a capacity of ± 100 MGD, the absolute random uncertainty due to the SCADA system would be ± 1.25 MGD (± 0.0125 times 100 MGD). Hence, the relative uncertainty estimate for the SCADA system would be 1.84 percent (i.e., ± 1.25 MGD divided by 68 MGD).

Since only 1 meter was in operation for the first hour on September 1, the overall random uncertainty is equal to the random uncertainty of meter No. 1, which is ± 1.25 MGD or ± 1.84 percent. If more than 1 meter was in operation, the relative uncertainty estimates would be combined using the root-mean-square method to determine the relative random uncertainty.

(3) Combining Systematic and Random Errors

The systematic and random errors can be combined using the following methodology:

$$S_b = \sum_{i=1}^{l_1}\sum_{j=1}^{m} S_{b_{ij\ \text{direction known}}} \pm \left[\sum_{i=1}^{l_2}\sum_{j=1}^{m} S^2_{b_{ij\ \text{direction unknown}}} + \sum_{i=1}^{l_3}\left(\sum_{j=1}^{m} S_{b_{ij\ \text{unknown but in same direction}}}\right)^2 + \sum_{i=1}^{l_4}\sum_{j=1}^{m} S^2_{r_{ij}}\right]^{\frac{1}{2}} \quad \textit{Equation (14)}$$

Where:

S_{rij}	=	Absolute random uncertainty
l_4	=	The number of uncertainty components in S_{rij}

Using *Equation (14)*, the overall uncertainty of the sum of the two flow measurements made in the first hour of September 1 is ± 1.38 MGD, or ± 2.03 percent.

This process is repeated for each of the 24-hour readings taken during the day and the results can be seen in Table 8. The average uncertainty, *CV*, of an hourly flow measurement performed on September 1 was ± 1.69 percent. This implies that the 95-percent confidence interval, *CI*, for an hourly flow measurement would be ± 3.50 percent (±1.69 times 2.069). Over the entire study period, the average uncertainty of an hourly flow measurement, *CV*, was found to be ± 1.88 percent. The average 95-percent confidence interval of an hourly flow measurement, *CI*, would then be equal to ± 3.68 percent (±1.88 times 1.960).

Table 8
Systematic, Random, and Overall Uncertainty Estimates for Hourly Flow Measurements Made on September 1, 1998

Hour	Total Flow (MGD)	CV_b (%)	S_b (MGD)	CV_r (%)	S_r (MGD)	Overall *CV* (%)
1	68	± 0.87	± 0.592	± 1.84	± 1.250	± 2.03
2	67	± 0.88	± 0.587	± 1.87	± 1.250	± 2.06
3	67	± 0.88	± 0.587	± 1.87	± 1.250	± 2.06
4	66	± 0.88	± 0.582	± 1.89	± 1.250	± 2.09
5	67	± 0.88	± 0.587	± 1.87	± 1.250	± 2.06
6	68	± 0.87	± 0.592	± 1.84	± 1.250	± 2.03
7	70	± 0.86	± 0.601	± 1.79	± 1.250	± 1.98

Table 8
Systematic, Random, and Overall Uncertainty Estimates for Hourly Flow Measurements Made on September 1, 1998

Hour	Total Flow (MGD)	CV_b (%)	S_b (MGD)	CV_r (%)	S_r (MGD)	Overall CV (%)
8	125	± 0.68	± 0.854	± 1.41	± 1.768	± 1.57
9	125	± 0.68	± 0.854	± 1.41	± 1.768	± 1.57
10	126	± 0.68	± 0.857	± 1.40	± 1.768	± 1.56
11	126	± 0.68	± 0.856	± 1.40	± 1.768	± 1.56
12	124	± 0.69	± 0.852	± 1.43	± 1.768	± 1.58
13	127	± 0.68	± 0.859	± 1.39	± 1.768	± 1.55
14	127	± 0.68	± 0.859	± 1.39	± 1.768	± 1.55
15	128	± 0.67	± 0.861	± 1.38	± 1.768	± 1.54
16	127	± 0.68	± 0.859	± 1.39	± 1.768	± 1.55
17	126	± 0.68	± 0.856	± 1.40	± 1.768	± 1.56
18	128	± 0.67	± 0.861	± 1.38	± 1.768	± 1.54
19	130	± 0.67	± 0.866	± 1.36	± 1.768	± 1.51
20	130	± 0.67	± 0.866	± 1.36	± 1.768	± 1.51
21	131	± 0.66	± 0.869	± 1.35	± 1.768	± 1.50
22	130	± 0.67	± 0.866	± 1.36	± 1.768	± 1.51
23	128	± 0.67	± 0.861	± 1.38	± 1.768	± 1.54
24	123	± 0.69	± 0.850	± 1.44	± 1.768	± 1.59

B. Uncertainty of Daily Volume Measurements

An estimate of the uncertainty of the daily volume pumped through the station can be obtained from the 24 hourly flow measurements. The volume pumped through the Southwest Station is the average of the 24 hourly flow measurements times 1 day. For September 1, the average volume pumped through the station is 109.8 million gallons (MG).

The uncertainty of the systematic daily volume measurements can be determined using the following equation:

$$CV_{Vb} = CV_{bV_{\substack{direction\\known}}} + \frac{\Delta t}{m_v}\left(\sum_{k=1}^{n} Q_k^2 CV^2_{b_{\substack{direction\\unknown}}} + \left(\sum_{k=1}^{n} Q_k CV_{b_{\substack{unknown\\but\ in\ same\\direction}}}\right)^2\right)^{\frac{1}{2}} \qquad \textit{Equation (15)}$$

Where:

CV_{Vb}	=	Relative uncertainty of the total bias volume measurement
$CV_{bV\ direction\ known}$	=	Bias with known direction of the total volume measurement
$CV_{bk\ direction\ unknown}$	=	Bias error in individual flow measurement *k* where the bias direction is unknown
$CV_{bk\ unknown\ but\ in\ same\ direction}$	=	Bias error in individual flow measurement *k* where the bias direction is unknown, but in the same direction for all meters
Δt	=	Time increment
Q_k	=	Value of flow measurement *k*
m_V	=	Sum of all *n* volume measurements.

Using *Equation (15)*, the relative systematic error, CV_{vb}, was ± 0.34 percent for September 1, 1998.

The average random uncertainty component for the daily volume can be obtained from the following expression:

$$CV_{Vr} = \pm \frac{\Delta t}{m_v}\left(\sum_{k=1}^{n} Q_k^2 CV_{rk}^2\right)^{\frac{1}{2}} \qquad \textit{Equation (16)}$$

Where:

CV_{rk}	=	Random error in individual flow measurement k
CV_{Vr}	=	Relative uncertainty of the volume measurement

Using *Equation (16)*, the relative random uncertainty of the daily volume, CV_{vr}, for September 1 is ± 0.30 percent.

The overall uncertainty of the daily volume can then be found by combining the systematic and random uncertainty components in the following manner:

$$CV_V = CV_{bV_{\substack{direction \\ known}}} + \frac{\Delta t}{m_v}\left(\sum_{k=1}^{n} Q_k^2 CV^2_{b_{k_{\substack{direction \\ unknown}}}} + \left(\sum_{k=1}^{n} Q_k CV_{b_{k_{\substack{unknown \\ but\ in\ same \\ direction}}}}}\right)^2 + \sum_{k=1}^{n} Q_k^2 CV^2_{r_k}\right)^{\frac{1}{2}} \quad \textit{Equation (17)}$$

For the date in question, the overall uncertainty of the daily volume, CV_V, was found to be ± 0.46 percent, or ± 0.505 MG (± 0.46 percent times 109.8 MG). The 95-percent confidence interval on the daily volume, CI_v, would then be ± 0.95 percent (± 0.46 times 2.069). Note that the 95-percent confidence interval for the daily volume (± 0.95 percent) is much narrower than the 95-percent confidence interval for the hourly flow measurement (± 3.50 percent). This is because the random errors and systematic errors with unknown direction associated with an hourly flow measurement are statistically cancelled when they are summed over a day's time. The average random, systematic, and overall uncertainty for each day in each 2-week study period were found using the above method. A summary of the daily volume uncertainties for the September 1998 study period appears in Table 8.

Table 9
Estimated Uncertainties for Daily Volumes in September 1998 Study Period

Date	CV_{Vb} (%)	CV_{Vr} (%)	CV_V (%)	CI_V (%)
September 1	± 0.34	± 0.30	± 0.46	± 0.95
September 2	± 0.44	± 0.30	± 0.53	± 1.10
September 3	± 0.38	± 0.30	± 0.48	± 1.00
September 4	± 0.39	± 0.30	± 0.49	± 1.02
September 5	± 0.49	± 0.31	± 0.58	± 1.19
September 6	± 0.48	± 0.30	± 0.56	± 1.17
September 7	± 0.51	± 0.34	± 0.61	± 1.27
September 8	± 0.44	± 0.31	± 0.53	± 1.10

Table 9
Estimated Uncertainties for Daily Volumes in September 1998 Study Period

Date	CV_{Vb} (%)	CV_{Vr} (%)	CV_V (%)	CI_V (%)
September 10	± 0.38	± 0.29	± 0.48	± 1.00
September 11	± 0.59	± 0.33	± 0.67	± 1.39
September 12	± 0.49	± 0.30	± 0.58	± 1.20
September 13	± 0.45	± 0.30	± 0.54	± 1.12
September 14	± 0.37	± 0.29	± 0.47	± 0.97

C. Uncertainty of Annual Volume Measurements

The uncertainty in the annual volume pumped through the station can be estimated using the estimated uncertainty in daily volume measurements. As mentioned earlier, the study period consisted of 2-week periods in September 1998, and February and May of 1999. In total, there were 42 days in the study period. Over this time period, the average systematic uncertainty for a daily volume measurement, CV_b, was determined to be ± 0.46 percent (± 0.164 percent from unknown biases and ± 0.432 percent from unknown biases known to be in the same direction for all meters) and the average random uncertainty for a daily volume measurement, CV_r, was estimated to be ± 0.34 percent. The average uncertainty in daily volume would then be ± 0.57 percent, and the average 95-percent confidence interval for the daily volume would be twice that value or ± 1.18 percent. The uncertainty in the annual volume pumped through the Southwest Station, CV_V can be determined as follows:

$$CV_V = CV_{b_{\substack{direction \\ known}}} \pm \left(\frac{CV^2_{b_{\substack{direction \\ unknown}}}}{n} + CV^2_{b_{\substack{unknown \\ but\ in\ same \\ direction}}} + \frac{CV_r^2}{n} \right)^{\frac{1}{2}}$$

$$= 0 \pm \left(\frac{0.16^2}{365} + 0.43^2 + \frac{0.34^2}{365} \right)^{\frac{1}{2}} = \pm 0.43\%$$

Equation (18)

The 95-percent confidence interval of the annual volume, CI_v, would then simply be twice this value or ± 0.84 percent (± 0.43 times 1.960). The 95-percent confidence interval for the annual volume (± 0.84 percent) is slightly less than the 95-percent confidence interval for the daily volume (± 1.18 percent). Most of the random error and unknown bias error associated with the daily volume measurement is statistically canceled when determining the uncertainty of the annual volume.

4. Quality Assurance

If the water accounting system is moved to the lakefront, there is a concern that if one of the direct diverter's flow measurement systems goes down, that there would be no way to measure the withdrawals from the lake. Thus, it is desirable that the direct diverters have a backup measurement system and, if possible, some other independent check on the measurements to ensure that the measurements are reasonable and accurate.

There are many backup systems at the Southwest Station. If a problem is detected in a particular venturi meter or its corresponding pressure transmitter, that venturi meter and its pump can be shutdown and a different venturi and pump can be used in its place for metering and distribution.

The SCADA system used to totalize the flow consists of several elements. A schematic of the SCADA system showing the flow and storage of data is provided in Appendix B. The signal from each pressure transmitter is sent to a computer (CP2), located at the plant, where the flow data is displayed, processed, and temporally stored. This computer is only capable of storing 3-days' worth of data. Therefore, the control center computer system (CP3) located at the Jardine water treatment plant reads the data from the CP2 and is responsible for storing and maintaining the flow records. Note that if CP2 were to fail, the data would not be communicated to CP3. The CP3 central control computer system consists of two computers with automatic failover such that if one computer fails, the other one takes over automatically. Both of these computers store data from the pumping station so none of the data should be lost in the event that either computer fails. The data stored on CP3 is also backed-up on tape.

The data is transferred from the CP2 computer at the plant to the CP3 computer at Jardine over a dedicated communication line (i.e., a telephone line). This communication line does not have a backup. However, since the CP2 at the station can store up to 3 days of data, no data will be lost if the line is repaired within 3 days.

If the SCADA system were to fail, there are no backup recorders at the station. Some readings could, however, be obtained manually from the venturi Nos. 5 and 6 manometers. This data would then be manually inputted in the SCADA system once the problems with the SCADA system were corrected. Venturi Nos. 1 through 4 do not have manometers, thus the data would be lost.

Unlike the stream-operated pumping stations, there are no chart recorders at the Southwest Station. Thus, the Southwest Station does not have this additional level of backup that the steam-operated stations do. Also, it is desirable to have an independent check on the flow measurement system employed by the Southwest Station. The steam-operated stations can use the chart recorders as an independent check; however, the Southwest Station does not have chart recorders, and thus there is no easily identifiable independent check on the flow measurement system.

5. Summary of Inadequacies in the Current Metering Systems

For the most part, the current metering system provided a reasonable level of accuracy and has acceptable quality assurance. There are a few areas of the metering system that appear to be deficient.

- The actual venturi meters are not calibrated. Rather, the City assumes that the manufacturer's rating curves are correct. Calibration of the venturi meters would confirm or deny this assumption.

- No backup data recorders exists. Therefore, should the SCADA system fail, all flow data at the Southwest Station is lost. Further, without two data sources, any additional uncertainty due to the sampling accuracy cannot be determined.

- The overall accuracy in estimating the water supply pumpage is dependent upon many measurement and analysis functions. The documented technical review and much previous work were focused on the accuracy of the pumpage measurements in hardware (i.e., meters, calibrator, pressure transmitter, etc.) and software (SCADA, etc.). This analysis does not take into account procedural errors such as inconsistent data in water supply pumpage as a result of the reporting mechanism.

6. Recommendations for Long-Term QA/QC and Improvements to Metering

Recommendations for long-term QA/QC and improvements to metering are as follows:

- Calibration of the venturi meters to determine if the manufacturer's rating curves are valid.
- Occasional inspection and measurement, if physically possible, of the inlet and throat of the venturi meters to determine any possible presence and effects of corrosion and tuberculation on the meter's accuracy.
- Installation of a backup recording device.
- Routine auditing of various water withdrawal reports, as part of the long-term QA/QC, as a means of accounting for procedural errors.

7. Conclusions

Some of the important conclusions are summarized below:

- For operational purposes, the City can determine the hourly flow measurement reading to within ± 3.68 percent at the Southwest Station. This value takes into account the random and systematic uncertainty associated with the venturi meters, pressure transmitters, calibration equipment, and recording system.

- On an annual basis, the total volume pumped through the station can be determined to within ± 0.84 percent. The 95-confidence interval for the annual volume is narrower than the 95-percent confidence interval for the hourly flow measurements made at the Southwest Station because the random and unknown bias errors associated with the measurement are statistically cancelled when the measurements are summed over a year's time.

- With the exception of the SCADA system, all the metering system has redundancy or backup for quality assurance. There is no backup data recorder at this time.

- There is no independent check of the flow measurement system that can be used as an indicator when there is a problem within the system.

References

American Society of Mechanical Engineers, *Fluid Meters: Their Theory and Application*. ASME, New York, 6th ed., 1971.

Ametek Power Instruments, *Rochester DPG-700 Precision Digital Pressure Gauge*, http://www.rochester.com/ Products/RIS/dgp-700.htm.

Analog Input Module PPX:505-6108A Electrical Specification [for the SCADA system], no date.

Cheremisinoff, Nicholas P. and Paul N. Cheremisinoff. *Flow Measurements for Engineers and Scientists.* Marcel Dekker, Inc., New York, 1888.

Correspondence. Written correspondence between Mr. R.W. Pence of the City of Chicago and David Clemmans of Energy Associates Inc., regarding the *BIF Flow Metering Equipment*, August 18, 1977.

Fisher-Rosemount, *Model 1151 Smart Pressure Transmitters*, Rev. A1, no date.

Foxboro Company. Telephone conversation between the Technical Support Department and Nicole Grossen of Mead & Hunt, Inc., regarding the accuracy, stability, and temperature uncertainties of the Foxboro 823DP Series Differential Pressure Transmitters, fall of 2000.

Hutton, Stanley P, *The Prediction of Venturi-Meter Coefficients and Their Variation with Roughness and Age.*

International Organization for Standardization, *Measurements of Fluid Flows by Means of Pressure Differential Devices*, ISO, Switzerland, 1991.

Mead & Hunt, Inc., *Technical Review of Lake Michigan Water Withdrawals by the City of Evanston* Draft, July 2002.

Meriam Instrument, General Installation, Operation, and Maintenance Instructions for Meriam Manometers, April 1992.

Miller, Richard W., *Flow Measurement Engineering Handbook*, McGraw-Hill, New York, 1996.

Henry Pratt Company, *Technical Specifications*, no date.

Primary Flow Signal, Inc., *Order and Flow Metering Sheet*, October 8, 1996.

Spitzer, David W., *Industrial Flow Measurement*. Instrument Society of America, North Carolina, 1990.

Final Report

Technical Review of Lake Michigan Withdrawals Springfield Avenue Pumping Station

City of Chicago

Prepared for:

U.S. Army Corps of Engineers – Chicago District
Chicago, Illinois

Prepared by:

MEAD & HUNT

August 2003

Table of Contents

Page

Executive Summary . . . . . E-i

1. General Description 1
   A. Summary of Operation 1
   B. Flow Measurement 1
   C. Flow Totalization 2
   D. Calibration 2

2. Uncertainty in Metering and Measurement Components 4
   A. Venturi-Type Meters 4
   B. Pressure Taps 4
   C. Meter Installation 4
   D. Sampling 6
   E. Pressure Differential Measurement 7
   F. Dry Calibration of Pressure Transmitters 8
   G. SCADA System 8

3. Sample Uncertainty Calculation for Effluent Meters 9
   A. Uncertainty of Hourly Flow Measurements 9
      (1) Systematic (Bias) Error 9
      (2) Random Error 15
      (3) Combining Systematic and Random Errors 16
   B. Uncertainty of Daily Volume Measurements 18
   C. Uncertainty of Annual Volume Measurements 20

4. Quality Assurance 22

5. Summary of Inadequacies in the Current Metering Systems 23

6. Recommendations for Long-Term QA/QC and Improvements to Metering 24

7. Conclusions 25

References 26

List of Appendices

Appendix

A Schematic of the Springfield Avenue Station

B Schematic of the SCADA Station

List of Tables

Table		Page
1	Flow Measurement Devices Used at the Springfield Station	2
2	Upstream Disturbances and Approximate Approach Lengths for the Various Venturi Meters at the Springfield Station	5
3	Summary of Required and Actual Downstream Straight Pipe Lengths at the Springfield Station	6
4	Results of the Randomized Complete Block Design Comparison Between the Flow Data From the Chart Recorders and the 24 Hourly Readings	7
5	Summary of Flow Characteristics for the First Hourly Reading on September 1, 1998	10
6	Uncertainty From the Pressure Transmitters and Calibration Equipment for the First Hourly Reading on September 1, 1998, for Venturi Nos. 2 and 5	12
7	Absolute Bias Estimates for the First Hourly Readings Taken on September 1, 1998	14
8	Systematic, Random, and Overall Uncertainty Estimates for Hourly Flow Measurements Made on September 1, 1998	17
9	Estimated Uncertainties for Daily Volumes in September 1998 Study Period	20

Executive Summary

Currently, diversion of water from Lake Michigan for the state of Illinois is measured at the Chicago Sanitary and Ship Canal at Romeoville. The Great Lakes Mediation Memorandum of Understanding established a lakefront diversion accounting system and specified a 3-year transition period to assess the technical acceptability of moving the diversion measurement system to the lakefront. A lakefront diversion accounting system requires metering of all domestic water withdrawals from Lake Michigan and the direct diversions into the Chicago Sanitary and Ship Canal system at the Chicago River, the Calumet River, and the North Shore Channel at Wilmette. During the 3-year transition period, the U.S. Army Corps of Engineers (USACE) has been tasked to initiate a technical review of the accuracy of the reported domestic withdrawals from Lake Michigan.

The USACE retained Mead & Hunt, Inc. to evaluate the accuracy of domestic withdrawals from Lake Michigan. A total of 12 pumping stations in the city of Chicago (City) and six suburban pumping stations will be evaluated. These evaluations include revisions to the investigations conducted on the City's Mayfair and Thomas Jefferson Stations and the city of Evanston's Station by the Illinois District of the U.S. Geological Survey. This report presents a summary of the flow measurement techniques at the Springfield Avenue Station (Springfield Station) as employed by the City, as well as estimates of the uncertainty of daily and annual volume measurements. Presently, the Springfield Station consists of five steam-operated pumps and five venturi-type meters.

To obtain an estimate of the uncertainty of an individual flow measurement, we examined the manufacturer's accuracy specifications for both the primary flow measurement devices (i.e., the venturi-type meters) and secondary measurement devices (i.e., the pressure transmitters). The Springfield Station's calibration technique, sampling technique, and device installation were also examined. All of the sources of uncertainty identified from this analysis were then classified as either random or systematic in nature. Using this information and the data logs provided by the City, we obtained an estimate of the uncertainty of an individual flow measurement. From this information, an estimate of the uncertainty of the daily and annual volume withdrawn from the lake can be obtained using standard statistical techniques.

Some of the important conclusions are summarized below:

- For operational purposes, the City can determine the hourly flow measurement reading to within -0.10 ± 5.55 percent at the Springfield Station. This value takes into account the random and systematic uncertainty associated with the venturi meters, pressure transmitters, calibration equipment, and recording system.

- On an annual basis, the total volume pumped through the station can be determined to within -0.10 ± 1.51 percent. The 95-confidence interval for the annual volume is narrower than the 95-percent confidence interval for the hourly flow measurements made at the Springfield Station because the random and unknown bias errors associated with the measurement are statistically canceled when the measurements are summed over a year's time.

- There is some form of backup system for all the measurements made at the Springfield Station. No loss of flow data is likely under most conditions.

- The chart recorders at the Springfield Station can be used as a check on the flow measurement system. The difference between the chart recorders and the daily log sheets should be less than 2 percent. A difference greater than 2 percent indicates there may be a problem within the flow measurement system.

Technical Review of
Lake Michigan Withdrawals
Springfield Avenue Pumping Station
City of Chicago

1. General Description

A. Summary of Operation

The Springfield Avenue Pumping Station (Springfield Station) is a steam-operated plant consisting of five pumps and five venturi-type meters. Each pump's flow is dedicated to a specific venturi-type meter. The pressure differentials on the meters are measured using Rosemount 1151 Smart pressure transmitters. The output signals from the pressure transmitters are sent to both the Supervisory Control and Data Acquisition (SCADA) system and to the Eurotherm Chessell chart recorders for totalization. The SCADA system is the primary recording device and samples the pressure transmitter signals every minute. These 1-minute readings are then used to determine the average daily volume pumped through any given venturi meter. The chart recorders are used as a backup to the SCADA system. The recorders provide a 24-hour record of pumpage for each venturi-type meter and totalization figures. A schematic of the Springfield Pumping Station is provided in Appendix A.

B. Flow Measurement

The Springfield Station uses five venturi-type meters to measure the flow pumped through the station. All five meters were installed between 1938 and 1960. These BIF measurement devices are proprietary variations of the classical Herschel-type venturi meter. Specifications of the five venturi-type meters are shown in Table 1.[1]

[1] The coefficient of discharge was calculated using Equation (1) of this report and the beta-ratio, venturi diameter, maximum flow and maximum differential pressure that was provided by the City of Chicago.

Table 1
Flow Measurement Devices Used at the Springfield Station

Venturi No.	Manu-facturer	Model No.	Approach Pipe Diameter (in.)	Throat Diameter (in.)	β-Ratio	Coefficient of Discharge	Max. Flow Rate (MGD)	Max. Differential Pressure (in. of Water)
1	BIF	M-DF	48	32.0	0.6667	0.9917	150	262.83
2	BIF	M-C	48	32.0	0.6667	0.9917	150	262.83
3	BIF	—DF	42	28.0	0.6667	0.9915	116	268.34
4	BIF	—C	42	27.0	0.6429	0.9921	104	257.44
5	BIF	—C	42	30.0	0.7143	0.9865	136	260.61

* *Millions of gallons per day.*

C. Flow Totalization

At the Springfield Station, flow is totalized using two different methods. The SCADA system is the primary flow totalization system. First, the output from the pressure transmitters is sent to the SCADA system. The SCADA system samples the output every minute. The pressure transmitters' signal is divided by an integrator constant to convert it to a volume measurement. The sum of the 1,440, 1-minute readings is then used to determine the volume pumped through the system on a daily basis.

The pressure transmitters' signal is also sent to the chart recorders. The chart recorders are used as a backup system to the SCADA system, and provide a 24-hour graphical record of the pumpage for each venturi-type meter. Instantaneous estimates of the flow rate and total volume are also provided by the chart recorders.

D. Calibration

An effective calibration procedure should calibrate both the primary flow meter and its secondary measurement device. First, the secondary measurement device, such as a pressure transmitter, should be calibrated to ensure it is reading correctly. Then, the flow meter itself should be calibrated to ensure it is functioning properly. The City of Chicago (City) does not perform any wet calibrations on the primary flow meters or their secondary measurement devices. Thus, all of the City's calibrations can be considered inferential in nature. The secondary measurement devices (i.e., the pressure transmitters, totalizers, etc.) are dry-calibrated once a year. If the City notices a problem or discrepancy, the instruments are checked; repaired, if necessary; and calibrated. If these tasks cannot be completed immediately, the unit is taken out-of-service until it can be repaired and calibrated. When a pressure transmitter or totalizer is calibrated, a full dry- calibration is performed using the Rochester DPG-700

pressure gauge. This pressure gauge provides a "calibrated" differential pressure that can be used to determine if the pressure transmitter or totalizer is reading properly. For the primary flow measurement devices, the City assumes the manufacturers' rating tables are correct.

After all the individual instruments have been dry-calibrated, the City performs an end-to-end calibration of the pumping station. When an end-to-end calibration is performed, the venturi-type meters are connected to manometers in order to obtain the pressure differentials. After an hour has passed, the volume measured by the manometer readings is compared to the volume measured by the totalizer. The City wants the difference between these two readings to be less than 2 percent for both the totalizer and instantaneous readings. This type of calibration is done to ensure that all the secondary measurement devices are working together properly.

During the calibration, the City takes readings both from the Meriam manometers and from the calibrated flow signal over a period of time, typically at least 1 hour. The averages of both sets of data are compared and if a significant difference in readings is detected, the calibrators are sent out for re-calibration and re-certification. The last re-calibration was April 2000. Per the manometer's specifications, the "NIST recognizes the U-type manometer as a primary standard due to its inherent accuracy and simplicity of operation." The manometers do not require calibration; therefore, comparing the values from the calibrated flow signal to the manometer's readings is a reasonable method of checking whether the calibrators should be re-certified.

2. Uncertainty in Metering and Measurement Components

A. Venturi-Type Meters

According to manufacturer's specifications, the five BIF venturi tubes have an uncertainty of ± 0.75 percent of the actual rate (over 10:1 range). Since the BIF meters have been in use for 40 to 65 years, a possibility of pitting and corrosion in the critical areas exists. The City has not inspected any of the meters at the Springfield Station. However, the meters at the Springfield Station are similar to the meter inspected by the City at the Southwest Station in that the throats of the meters are lined with bronze. Bronze is known for its ability to resist corrosion and formation of tubercles. Therefore, it is reasonable to assume that any significant corrosion or tuberculation would occur on the inlet piping only. This was the case when the meter was inspected at the Southwest Station. Since the water pumped through the Springfield Station and the Southwest Station have the same water chemistry and are treated in the same manner, it is assumed that if the venturis at the Springfield Station were inspected, the results would be similar to the results of the meter inspection at the Southwest Station. Therefore, based on the determinations made in the *Technical Review of Lake Michigan–Southwest Pumping Station*, any error due to corrosion and tuberculation is considered insignificant at the Springfield Station.

B. Pressure Taps

The pressure taps that are used to measure the pressure differential should be square with no roughness, burrs, or wire edges (Miller, 1996). If the pressure taps that are used do not meet these requirements, then a bias error would be introduced. It was not practical to inspect the pressure taps of these meters. The flow measurement devices were all constructed under a controlled-manufacturing environment with very little opportunity for a pressure tap to be constructed poorly. Thus, we assumed that the manufacturer constructed the pressure taps correctly and that no additional error would be introduced due to the pressure taps.

C. Meter Installation

An appropriate length of straight, circular pipe is required upstream of the flow meter to guarantee that the velocity profile entering the meter is not distorted and that the meter will perform properly. The length of this approach section depends on number and types of bends and fittings located upstream of the meter.

Table 2 lists the approximate approach length and upstream fittings for the various venturi meters located at the Springfield Pumping Station. The "Required Approach Length for Zero Error" and the "Required Approach Length for 0.5-percent Error" values reported in Table 2 were taken from ISO 5167-1:1991.

As shown in Table 2, Meter Nos. 1, 2, 4, and 5 have the required minimum lengths for the first two upstream lengths of pipe. Meter No. 3, however, does not meet the required minimum length for the first upstream fitting requirements, but does meet the second upstream fitting requirements. Meter No. 3 only has an upstream length to the first fitting of 11.4 feet which falls between the required minimum length for zero error (14.0 feet) and for the required minimum length for 0.5-percent error (5.3 feet).

ISO 5167-1:1991 reference materials only provide lengths for zero error and 0.5-percent error. For Meter No. 3, the actual pipe lengths fall between the minimum requirements for zero error and 0.5-percent error. Therefore, actual error value in this situation is unknown. To be conservative, 0.5-percent error will be assumed in these instances. Given this assumption, Meter No. 3 is assumed to have an additional 0.50-percent of error since its first length of upstream piping does not meet the minimum upstream piping requirements.

These inadequate pipe lengths will cause a distorted flow profile with little swirl at the venturi meter. No information was available for the bias direction for a distorted profile with little swirl. Miller reported that if a swirl was produced at the venturi meter, the flows tend to be under-reported Therefore, it is assumed that for this application the flows of a distorted flow profile without swirl will also be under-reported. Given this, the errors for meter No. 3 will be -0.5 percent.

Table 2
Upstream Disturbances and
Approximate Approach Lengths for the
Various Venturi Meters at the Springfield Station

Venturi No.	First Upstream Fitting	First Upstream Approach Length (feet)	Required Pipe Length for Zero Error (feet)	Required Pipe Length for ± 0.5%-Error (feet)	Second Upstream Fitting	Second Upstream Approach Length (feet)	Required Pipe Length for Zero Error (feet)	Required Pipe Length for ± 0.5%-Error (feet)
1	Single bend	19.4	16.0	6.0	Single bend	25.6	8.0	4.0
2	Single bend	35.4	16.0	6.0	Single bend	49.6	8.0	4.0
3	Single bend	11.4	14.0	5.3	Expander	10.5	9.6	6.1
4	Single bend	28.3	14.0	5.3	Single bend	23.2	7.0	3.5
5	Single bend	14.7	14.0	7.0	Single bend	23.2	7.0	3.5

Inadequate straight piping downstream of the meter can also affect the meter's accuracy. ISO 5167-1:1991 reference materials indicate that as long as the downstream length of straight piping exceeds four times the meter's throat diameter, no additional error is expected. Unlike for the upstream piping lengths, the ISO 5167-1:1991 reference does not indicate what length would be required to provide an uncertainty of 0.5 percent or any other uncertainty value. The required and actual downstream lengths of straight pipe is summarized in Table 3. The downstream straight pipe lengths of Meter Nos. 1, 2, 4, and 5, are adequate to ensure no additional error due to downstream piping geometry. The downstream length of Meter No. 3 is 0.3-feet shorter than the minimum required downstream pipe length. Although, the downstream length of Meter No. 3 does not meet the downstream piping requirement of Meter No. 4's throat diameters, no error value is available in the ISO 5167-1:1991 reference. Therefore, although additional error may be present due to the downstream piping, it cannot be quantified and included in the actual uncertainty calculations.

Table 3
Summary of Required and Actual Downstream Straight Pipe Lengths at the Springfield Station

Venturi No.	Throat Diameter (feet)	Required Downstream Pipe Length for Zero Error (feet)	Actual Downstream Pipe Length (feet)	Meets Required Downstream Pipe Length
1	2.67	10.7	26.7	Yes
2	2.67	10.7	28.3	Yes
3	2.33	9.3	9.0	No
4	2.25	9.0	39.3	Yes
5	2.50	10.0	10.7	Yes

D. Sampling

Additional uncertainty can also be introduced due to how the flow measurement data is recorded. If, for example, a quantity varies sinusoidally, but that quantity is only measured at the times when the quantity is at a peak, then the average measurements will be higher than the true average. This would introduce a bias into the system. On the other hand, if a quantity is measured or sampled frequently, then there will be very little error introduced due to the sampling. The flow rates at the Springfield Station are sampled every minute, and these 1-minute sample readings are used to determine the average daily volume pumped through the station. There are also chart recorders that estimate the volume pumped continuously. If the 1-minute samplings and the continuous chart recordings give the same estimate for the total volume, then it can be assumed that there is no additional uncertainty introduced due to sampling. The 1-minute sampling data from the SCADA system were not readily available. Thus, the

daily logs used in the Springfield Station were used instead of the SCADA. The daily logs report an hourly instantaneous flow reading for each venturi-type meter in operation, as well as the daily volume pumped as reported by the chart recorders. If the sum of the 24 individual hourly measurements on the daily log and the volume measured by the chart recorders are statistically the same, then it can be assumed that there would be no additional uncertainty introduced due to sampling.

To determine if the chart recorders and the daily logs were reporting the same volume, a randomized complete block design was performed on some sample data with the measurement method acting as the treatments and the daily volume measurements acting as the blocks. The statistical tests were performed at the 95-percent confidence level. A summary of the results of the randomized complete block tests appears in Table 4. These results indicate that, at the 95-percent confidence level, there is no statistical difference between the chart recorder and the sum of the 24 hourly readings of the daily log sheets for five out of six test periods. These statistical tests were performed using 24 hourly readings from the daily log sheet and not the 1,440, 1-minute readings from the SCADA system. If the majority of the venturi-type meters and the chart recorders report the same value statistically using only 24 one-hour readings, then the venturi-type meters and chart recorders should report the same value statistically using 1,440, 1-minute readings. Thus, it was assumed that there was no additional uncertainty introduced due to sampling.

Table 4
Results of the Randomized Complete Block Design Comparison Between the Flow Data From the Chart Recorders and the 24 Hourly Readings

Dates	Venturi No.	Statistical Difference
September 1-14, 1998	2	No
	5	No
February 1-14, 1999	3 and 5	Yes
	4	No
May 1-14, 1999	3	No
	2 and 5	No

E. Pressure Differential Measurement

The pressure differentials of all five venturi-type meters are measured using Rosemount 1151 Smart pressure transmitters. Based on the manufacturer's performance specifications, these pressure transmitters have an accuracy of ± 0.1 percent of the calibrated span. In conversations with technical support staff at Fisher-Rosemount, this accuracy includes effects caused by hysteresis, dead band, linearity, and repeatablity. The Rosemount 1151 Smart transmitters have a stability of ± 0.1 percent URL and a temperature effect of ± (0.2 percent URL plus 0.18 percent of calibrated span) per 100 degrees F. The lake temperature varies from about 32 to 70 degrees F. This is approximately a 40-degree F

temperature range. The URL of the Rosemount 1151 Smart transmitters is 750 inches of water. It is assumed that the specifications provided by the manufacturer are correct. The combination of these errors is considered to be systematic in nature.[2] The direction of this bias is unknown.

F. Dry Calibration of Pressure Transmitters

The secondary measurement devices (i.e., pressure transmitters) are calibrated once a year using a Rochester DPG-700 module. Because the pressure transmitter is adjusted to the Rochester DPG-700 reading, all of the uncertainty components of the Rochester DPG-700 module will become a bias reported by the Rosemount 1151 pressure transmitter. Since both pressure and current readings are taken from the Rochester DPG-700 module during calibration, two accuracy values apply. For the pressure reading, the accuracy is reported to be ± 0.05 percent of full scale plus one digit of display. Based on manufacturer's specification, the pressure display is shown to 0.002 pounds per square-inch gauge (PSIG), which is equal to 0.055 inches of water. The range of the Rochester DPG-700 module is 0 to 30 pounds per square inch ([psi] or 830.80 inches of water). The current reading's uncertainty is reported as ± 0.05 percent of full scale plus one digit of display. The upper range limit for the current is 50 mA. The current resolution is 0.005 mA. Note, however, that the two parameters of the calibrator (accuracy of the pressure module and accuracy of the current multimeter) may not be totally uncorrelated since the pressure transmitter converts a physical measurement, the pressure, into an electrical signal while the multimeter loop current appears to be correlated to the pressure from the pressure module. Although, these parameters may not be totally uncorrelated, it was not accounted for in this analysis. The direction of these biases, although unknown, will be in the same direction for all five meters in the Springfield Station.

G. SCADA System

In order for the SCADA system to determine the volume pumped through the Springfield Station, the analog signal from the pressure transmitter was converted to a digital signal using an analog input module. The manufacturer's specifications state that the analog-to-digital conversion is accurate to within ± 1.25 percent of full scale over operating range, and to within ± 0.7 percent of full scale at 25 degrees C. Since the water temperature varies from 32 to 70 degrees F, the uncertainty value of ± 1.25 percent of full scale over operating range will be used. In this case, the full scale was assumed to be the full scale of the venturi-type meter to which the pressure transmitter was connected. The error due to the analog-to-digital conversion is random in nature.

---

[2] Per the manufacturer, the deadband was included in the accuracy value. Since the deadband could not be separated from the accuracy value and all the other components of accuracy are considered systematic, the deadband is assumed to be systematic in this situation even though it technically is bias.

3. Sample Uncertainty Calculation for Effluent Meters

To demonstrate how the uncertainty of the measured volume pumped through the Springfield Station was estimated, a series of sample calculations follows. The method used to estimate the uncertainty is similar to that described in the *Technical Review of Lake Michigan Water Withdrawal by the City of Evanston*. Please refer to this document for background on the statistical handling of measurement uncertainty. The City provided the hourly logs of three, 2-week periods. These time periods were the first 14 days in September 1998, and February and May 1999. It was assumed that the Springfield Station's pumpages over these time periods were representative of the typical pumpages. It was also assumed that Springfield Station's pumpages were constant over each hour reported on the daily log sheets. The uncertainties can be reported as the standard deviation of the measurements (expressed by the variable *s*) or in relative terms (expressed by the variable *CV*, which is the standard deviation of the measurements divided by the mean of the measurements).

A. Uncertainty of Hourly Flow Measurements

(1) Systematic (Bias) Error

The majority of the error components are systematic in nature. These systematic errors include error from the venturi, inadequate approach length, the pressure transmitters, and the calibration equipment. To determine the uncertainty of the hourly flow measurements, all uncertainties need to be in terms of percent accuracy of actual rate. The errors associated with the venturi and the inadequate approach lengths are already expressed in these terms. However, the accuracy associated with the pressure transmitters and calibration equipment are in terms of percent accuracy per calibrated span, upper range limit (URL), full scale (FS), or a combination of these.

The standard equation for the flow through a venturi-type meter is:

$$Q = \frac{C_d A_t}{\sqrt{1-\beta^4}} \sqrt{2g\Delta h} \qquad \textit{Equation (1)}$$

Where:

Q	=	Flow rate
C_d	=	Discharge coefficient
A_t	=	Area of the throat section
β	=	Ratio of the throat diameter to the approach section diameter (also referred to as the beta-ratio)
g	=	Acceleration due to gravity
Δh	=	Pressure differential across the meter

Based on manufacturer information, the C_d values for the venturi meters range from 0.9865 to 0.9921, depending on the particular meter.

Note that the model assumes that the discharge coefficient, throat area, and throat to approach diameter ratio (i.e., β-ratio) introduce no errors to the discharge calculations. That is, the differential pressure head of the venturi meter is the only source of error or uncertainty.

At the Springfield Station, each venturi meter is dedicated to a single pump. For illustration of the uncertainty calculations, we will be examining the pumping characteristics for September 1, 1998. On this day, Pump Nos. 2 and 5 were routed through their respective venturi meters.

The throat area, A_t, for the venturi-meter No. 2 is:

$$A_t = \frac{\Pi(32.0)^2}{4} = 804.2in^2 = 5.585ft^2 \qquad \textit{Equation (2)}$$

Likewise, the throat area of venturi No. 5 is 4.909 square feet. For the first hour on September 1, 1998, 45 MGD and 41 MGD were flowing through venturi Nos. 2 and 5, respectively. The pressure differential for venturi No. 2 is calculated below using Equation (1), and the β-ratio of 0.6667 from Table 1.

$$\Delta h = \left[\frac{Q\sqrt{1-\beta^4}}{C_d A_t \sqrt{2g}}\right]^2 = 12\left[\frac{1.547(45MGD)\sqrt{1-(0.6667)^4}}{(0.9917)(5.585ft^2)\sqrt{2(32.16ft/s^2)}}\right]^2 = 23.65in. \qquad \textit{Equation (3)}$$

The values of 12 and 1.547 that appear in *Equation (3)* are unit conversion factors to convert feet to inches and MGD to cubic feet per second (cfs), respectively. A summary of flow characteristics for the first hourly reading of the two venturi-type meters on September 1 appears in Table 5.

Table 5
Summary of Flow Characteristics for the First Hourly Reading on September 1, 1998

Venturi No.	Throat Area (sq. ft.)	Flow Rate (MGD)	Pressure Differential (in. Water)
2	5.585	45	23.65
5	4.909	41	23.68

The pressure differentials of all the venturi-type meters are measured using Rosemount 1151 Smart pressure transmitters. Based on the manufacturer's performance specifications, these pressure transmitters have an accuracy of ± 0.1 percent of the calibrated span, a stability of ± 0.10 percent of URL, and temperature effect of ± (0.2 percent URL, plus 0.18 percent of calibrated span) per 100 degrees C. The calibrated spans of venturi Nos. 2 and 5 are 262.83 and 260.61 inches of water, respectively, and the URL of the transmitters is 750 inches of water. Thus, the uncertainty in the pressure differential measurement due to accuracy would be ± 0.263 inches of water (i.e., ± 0.001 times 262.83) for venturi meter No. 2. The uncertainty in the flow rate due to the accuracy of the pressure transmitter for venturi meter No. 2 would then be:

$$CV_{Qa} = \frac{Xs_p}{\Delta h} = \frac{(0.5)(\pm 0.263in)}{23.65in} = \pm 0.556\% \qquad \textit{Equation (4)}$$

Where:

CV_{Qa}	=	Uncertainty in the flow rate due to the accuracy of the pressure transmitter
s_p	=	Uncertainty in the pressure transmitter (due to transmitter accuracy in this case)
X	=	Sensitivity coefficient equal to 0.5 for the pressure transmitter as the flow is directly proportional to the square root of the pressure differential in Equation (1)
Δh	=	Pressure differential

See *Technical Review of Lake Michigan Water Withdrawals by the City of Evanston* for additional information on the sensitivity coefficient, *X*. The uncertainty in the flow rate due to the transmitter's accuracy, stability, and temperature affect for meter Nos. 2 and 5 are shown in Table 6.

The pressure transmitters are calibrated using a Rochester DPG-700 calibrator. Since both pressure and current readings are taken from the calibrator, two independent accuracy values apply. For the pressure reading, the accuracy is reported to be ± 0.05 percent of full scale, plus one digit of display. Based on manufacturer's specification, the pressure display is shown to 0.002 PSIG, which is equal to 0.055 inches of water. The range of the Rochester DPG-700 module is 0 to 30 psi (or 830.80 inches of water). Thus, the uncertainty in the pressure component of the calibrator would be ± 0.470 inches of water (i.e., ± 0.0005 times 830.80, plus 0.055) for venturi meter No. 2. The uncertainty in the flow rate due to pressure component of the calibrator for venturi meter No. 2 would then be:

$$CV_{Qa} = \frac{Xs_p}{\Delta h} = \frac{(0.5)(\pm 0.470in)}{23.65in} = \pm 0.994\% \qquad \textit{Equation (5)}$$

The current reading's uncertainty is reported as ± 0.05 percent of full scale, plus one digit of display. The upper range limit for the current is 50 mA. The current resolution is 0.005 mA. Thus, the uncertainty in the current component of the calibrator would be ± 0.030 mA (i.e., ± 0.0005 times 50, plus 0.005) for venturi meter No. 2.

The uncertainty in the flow rate due to current component of the calibrator for venturi meter No. 2 would then be:

$$CV_{Qa} = \frac{Xs_i}{\Delta i} = \frac{(1.0)(\pm 0.030mA)}{8.8mA} = \pm 0.341\% \qquad \textit{Equation (6)}$$

Where:

s_i = Uncertainty due to the current reading for the calibrator pressure differential
Δi = Current differential

The current differential is known to be linear to the flow rate with 4 mA corresponding to zero flow, and 20 mA corresponding to flow meter capacity, which is 150 MGD for meter No. 2 and 136 MGD for meter No. 5. Using this relationship, for the first hour on September 1, the corresponding currents would be 8.8 mA for both meter Nos. 2 and 5, respectively. Note that for this calculation, the sensitivity coefficient, *X*, is 1.0 since the flow rate is directly proportional to the current (i.e., a linear relationship). This process was repeated for meter No. 5's DPG-700 pressure gauge accuracy. A summary of these estimates appears in Table 6.

Table No. 6
Uncertainty From the Pressure Transmitters and Calibration Equipment for the First Hourly Reading on September 1, 1998, for Venturi Nos. 2 and 5

Venturi No.	Instrument	Uncertainty Source	CV for Δh or ΔmA	URL or Calibrated Span	Uncertainty for Δh or ΔmA	CV for Flow (%)
2	Rosemount	Pressure transmitter	0.1% of calibrated span	262.83 in. water	0.263 in. water	0.556
2	Rosemount	Pressure transmitter	0.1% of URL	750 in. water	0.750 in. water	1.586
2	Rosemount	Pressure transmitter	(0.2% URL + 0.18% calibrated span)/100°F	750 in. water 262.83 in. water	0.789 in. water	1.669
2	DPG-700	Calibrator	0.05% FS + 1 digit*	830.8 in. water	0.470 in. water	0.994
2	DPG-700	Calibrator	0.05% FS + 1 digit**	50 mA	0.030 mA	0.341

Table No. 6
Uncertainty From the Pressure Transmitters and Calibration Equipment for the First Hourly Reading on September 1, 1998, for Venturi Nos. 2 and 5

Venturi No.	Instrument	Uncertainty Source	CV for Δh or ΔmA	URL or Calibrated Span	Uncertainty for Δh or ΔmA	CV for Flow (%)
5	Rosemount	Pressure transmitter	0.1% of calibrated span	260.61 in. water	0.261 in. water	0.550
5	Rosemount	Pressure transmitter	0.1% of URL	750 in. water	0.750 in. water	1.584
5	Rosemount	Pressure transmitter	(0.2% URL + 0.18% calibrated span)/100°F	750 in. water and 260.61 in. water	0.788 in. water	1.663
5	DPG-700	Calibrator	0.05% FS + 1 digit*	830.8 in. water	0.470 in. water	0.993
5	DPG-700	Calibrator	0.05% FS + 1 digit**	50 mA	0.030 mA	0.340

* *One digit is equal to 0.055 in. Water*
** *One digit is equal to 0.005 mA*

In this study, the bias uncertainty estimates will be broken down into three categories:

- Bias uncertainty with a known bias direction.
- Bias uncertainty with an unknown bias, but known to be in the same direction for each meter.
- Bias uncertainty with an unknown bias direction.

Explanation of this breakdown was detailed in the *Technical Review of Lake Michigan Water Withdrawals by the City of Evanston*. Table 7 lists the type of bias uncertainty for each of the bias estimates for the first hourly readings for venturi meter Nos. 2 and 5. Additionally, Table 7 also provides the absolute bias estimates for the first hourly readings taken from venturi meter Nos. 2 and 5 based on the following equation:

$$s_b = CV_{flow} \cdot Q_{\substack{first \\ hour}} = (0.00556)(45\,MGD) = 0.250\,MGD$$ *Equation (7)*

Where:

S_b	=	Standard deviation (or absolute uncertainty) of the flow measurement due to the respective systematic uncertainty estimate
CV_{flow}	=	Relative uncertainty in the flow rate
$Q_{first\ hour}$	=	Flow for the first hour

Table 7
Absolute Bias Estimates for the First Hourly Readings Taken on September 1, 1998

Venturi No.	Bias Component	Type of Bias	CV_b(%)	S_b (MGD)
2	Venturi	Direction unknown	± 0.750	± 0.338
	Approach lengths	N/A	N/A	N/A
	Pressure transmitters			
	– *Accuracy*	Direction unknown	± 0.556	± 0.250
	– *Stability*	Direction unknown	± 1.586	± 0.714
	– *Temperature*	Direction unknown	± 1.669	± 0.751
	Calibrator			
	– *Pressure*	Direction unknown,	± 0.994	± 0.447
	– *Current*	but in same direction for all meters	± 0.341	± 0.153
5	Venturi	Direction unknown	± 0.750	± 0.308
	Approach lengths	N/A	N/A	N/A
	Pressure transmitters			
	– *Accuracy*	Direction unknown	± 0.550	± 0.226
	– *Stability*	Direction unknown	± 1.584	± 0.649
	– *Temperature*	Direction unknown	± 1.663	± 0.681
	Calibrator			
	– *Pressure*	Direction unknown,	± 0.993	± 0.407
	– *Current*	but in same direction for all meters	± 0.340	± 0.139

The systematic uncertainty estimates for meter Nos.2 and 5 can be combined, as shown below in *Equation (8)*, to determine the overall hourly systematic uncertainty for September 1, 1998. To determine the uncertainty of the sum of the three measurements, the individual uncertainty

estimates should be combined on the basis of absolute uncertainty (i.e., standard deviations) and not relative uncertainty (i.e., coefficient of variation).

$$S_b = \sum_{i=1}^{l_1}\sum_{j=1}^{m} S_{b_{ij\ \substack{direction\\known}}} \pm \left[\sum_{i=1}^{l_2}\sum_{j=1}^{m} S^2_{b_{ij\ \substack{direction\\unknown}}} + \sum_{i=1}^{l_3}\left(\sum_{j=1}^{m} S_{b_{ij\ \substack{unknown\\but\ in\ same\\direction}}}\right)^2\right]^{\frac{1}{2}}$$

Equation (8)

Where:

S_b	=	Combined uncertainty or standard deviation of the flow measurement.
$S_{bij\ direction\ known}$	=	Absolute bias uncertainty of known direction for measurement *i,j*.
$S_{bij\ unknown\ but\ in\ same\ direction}$	=	Absolute bias uncertainty of unknown direction but known to occur in the same direction for each meter for measurement *i,j*.
$S_{bij\ direction\ unknown}$	=	Absolute bias uncertainty of unknown direction for measurement *i,j*.
m	=	The number of meters.
l_1, l_2, l_3	=	The number of uncertainty components in $S_{bij\ direction\ known}$, $S_{bij\ direction\ unknown}$, and $S_{bij\ unknown\ but\ in\ same\ direction}$, respectively.

For the first hour, using *Equation (8)*, the overall absolute bias uncertainty, S_b, was found to be ± 1.760 MGD, which corresponds to a relative uncertainty, CV_b, of ± 2.05 percent (i.e., 1.760 MGD divided by the total flow rate of 86 MGD). This process was repeated for each of the 24-hour readings taken during the day. The results are provided in Table 8 (table combining random and bias).

(2) Random Error

Only the SCADA uncertainty was identified as being random in nature. The manufacturer states that the analog-to-digital conversion can take place with an uncertainty of ± 1.25 percent of full scale. As mentioned earlier, it was assumed that full scale refers to full scale of the venturi-type meter. Thus, for venturi No. 2 with a capacity of ± 150 MGD, the absolute random uncertainty due to the SCADA system would be ± 1.88 MGD (± 0.0125 times 150 MGD). Hence, the relative

uncertainty estimate for the SCADA system would be ± 4.17 percent (i.e., ± 1.88 MGD divided by 45 MGD). Similarly, the absolute random uncertainty for venturi No. 5 would be ± 1.70 MGD (i.e., ± 0.0125 times 136 MGD), and the relative random uncertainty would be ± 4.15 percent (i.e., ± 1.70 MGD divided by 41 MGD).

The overall absolute random uncertainty can be determined by combining the absolute random uncertainties due to the SCADA system for venturi Nos. 2 and 5 using the root-mean-square method. The method results in an overall absolute random uncertainty of ± 2.53 MGD or a relative random uncertainty, CV_r, of ± 2.95 percent (i.e., ± 2.53 MGD divided by 86 MGD). The results are provided in Table 8 (table combining random and bias).

(3) Combining Systematic and Random Errors

The systematic and random errors can be combined using the following methodology:

$$S_b = \sum_{i=1}^{l_1}\sum_{j=1}^{m} S_{b_{ij\ \text{direction known}}} \pm \left[\sum_{i=1}^{l_2}\sum_{j=1}^{m} S^2_{b_{ij\ \text{direction unknown}}} + \sum_{i=1}^{l_3}\left(\sum_{j=1}^{m} S_{b_{ij\ \text{unknown but in same direction}}}\right)^2 + \sum_{i=1}^{l_4}\sum_{j=1}^{m} S^2_{r_{ij}}\right]^{\frac{1}{2}} \qquad \textit{Equation (9)}$$

Where:

S_{rij}	=	Absolute random uncertainty.
l_4	=	The number of uncertainty components in S_{rij}.

Using *Equation (9)*, the overall uncertainty of the sum of the two flow measurements made in the first hour of September 1, 1998, is ± 3.083 MGD, or ± 3.58 percent.

This process is repeated for each of the 24-hour readings taken during the day and the results can be seen in Table 8. The average uncertainty, *CV*, of an hourly flow measurement performed on September 1 was ± 2.93 percent. This implies that the 95-percent confidence interval, *CI*, for an hourly flow measurement would be ± 6.06 percent (± 2.93 times 2.069). Over the entire study period, the average uncertainty of an hourly flow measurement, *CV*, was found to be -0.10 ± 2.83 percent. The average 95-percent confidence interval of an hourly flow measurement, *CI*, would then be equal to -0.10 ± 5.55 percent (-0.10 2.83 times 1.960]).

(-0.10 ± [2.83 times 1.960]).

Table 8
Systematic, Random, and Overall Uncertainty Estimates for Hourly Flow Measurements Made on September 1, 1998

Hour	Total Flow (MGD)	CV_b (%)	S_b (MGD)	CV_r (%)	S_r (MGD)	Overall CV (%)
1	86	± 2.05	± 1.760	± 2.94	± 2.531	± 3.58
2	83	± 2.19	± 1.818	± 3.05	± 2.531	± 3.75
3	82	± 2.24	± 1.834	± 3.09	± 2.531	± 3.81
4	82	± 2.24	± 1.834	± 3.09	± 2.531	± 3.81
5	88	± 1.97	± 1.735	± 2.88	± 2.531	± 2.49
6	109	± 1.36	± 1.480	± 2.32	± 2.531	± 2.69
7	118	± 1.20	± 1.417	± 2.14	± 2.531	± 2.46
8	117	± 1.22	± 1.429	± 2.16	± 2.531	± 2.48
9	107	± 1.42	± 1.514	± 2.37	± 2.531	± 2.76
10	108	± 1.40	± 1.508	± 2.34	± 2.531	± 2.73
11	108	± 1.40	± 1.508	± 2.34	± 2.531	± 2.73
12	107	± 1.42	± 1.522	± 2.37	± 2.531	± 2.76
13	108	± 1.40	± 1.508	± 2.34	± 2.531	± 2.73
14	110	± 1.34	± 1.479	± 2.30	± 2.531	± 2.66
15	108	± 1.38	± 1.489	± 2.34	± 2.531	± 2.72
16	108	± 1.38	± 1.488	± 2.34	± 2.531	± 2.72
17	108	± 1.38	± 1.489	± 2.34	± 2.531	± 2.72
18	111	± 1.32	± 1.465	± 2.28	± 2.531	± 2.63
19	117	± 1.21	± 1.418	± 2.16	± 2.531	± 2.48
20	117	± 1.21	± 1.418	± 2.16	± 2.531	± 2.48
21	108	± 1.39	± 1.502	± 2.34	± 2.531	± 2.72
22	106	± 1.44	± 1.528	± 2.39	± 2.531	± 2.79
23	92	± 1.84	± 1.688	± 2.75	± 2.531	± 3.31
24	91	± 2.87	± 1.699	± 2.78	± 2.531	± 3.35

B. Uncertainty of Daily Volume Measurements

An estimate of the uncertainty of the daily volume pumped through the station can be obtained from the 24 hourly flow measurements. The volume pumped through the Springfield Station is the average of the 24 hourly flow measurements times 1 day. For September 1, 1998, the average volume pumped through the station is 103.3 million gallons (MG).

The uncertainty of the systematic daily volume measurements can be determined using the following equation:

$$CV_{Vb} = CV_{bV_{\substack{direction\\known}}} + \frac{\Delta t}{m_v}\left(\sum_{k=1}^{n} Q_k^2 CV^2_{b_{k_{\substack{direction\\unknown}}}} + \left(\sum_{k=1}^{n} Q_k CV_{b_{k_{\substack{unknown\\but\ in\ same\\direction}}}}\right)^2\right)^{\frac{1}{2}} \qquad \textit{Equation (10)}$$

Where:

CV_{Vb}	=	Relative uncertainty of the total bias volume measurement
$CV_{bV\ direction\ known}$	=	Bias with known direction of total volume measurement
$CV_{bk\ direction\ unknown}$	=	Bias error in individual flow measurement *k* where the bias direction is unknown.
$CV_{bk\ unknown\ but\ in\ same\ direction}$	=	Bias error in individual flow measurement *k* where the bias direction is unknown, but in the same direction for all meters
Δt	=	Time increment
Q_k	=	Value of flow measurement k.
m_V	=	Sum of all *n* volume measurements

Using *Equation (10)*, the relative systematic error, CV_{vb}, was ± 0.81 percent for September 1, 1998.

The average random uncertainty component for the daily volume can be obtained from the following expression:

$$CV_V = CV_{bV_{\substack{direction\\known}}} + \frac{\Delta t}{m_v}\left(\sum_{k=1}^{n} Q_k^2 CV_{b_{k_{\substack{direction\\unknown}}}}^2 + \left(\sum_{k=1}^{n} Q_k CV_{b_{k_{\substack{unknown\\but\ in\ same\\direction}}}}\right)^2 + \sum_{k=1}^{n} Q_k^2 CV_{r_k}^2\right)^{\frac{1}{2}} \qquad \textit{Equation (11)}$$

Where:

CV_{rk}	=	Random error in individual flow measurement *k*.
CV_{Vr}	=	Relative uncertainty of the volume measurement.

Using *Equation (11)*, the relative random uncertainty of the daily volume, CV_{vr}, for September 1, 1998, is ± 0.50 percent.

The overall uncertainty of the daily volume can then be found by combining the systematic and random uncertainty components in the following manner:

$$CV_{Vr} = \pm \frac{\Delta t}{m_v}\left(\sum_{k=1}^{n} Q_k^2 CV_{rk}^2\right)^{\frac{1}{2}} \qquad \textit{Equation (12)}$$

For the date in question, the overall uncertainty of the daily volume, CV_V, was found to be ± 0.95 percent, or ± 0.98 MG (± 0.95 percent times 103.3 MG). The 95-percent confidence interval on the daily volume, CI_v, would then be ± 1.97 percent (±0.95 times 2.069). Note that the 95-percent confidence interval for the daily volume (± 1.97 percent) is much narrower than the 95-percent confidence interval for the hourly flow measurement (± 6.06 percent). This is because the random errors and systematic errors with unknown direction associated with an hourly flow measurement are statistically canceled when they are summed over a day's time. The average random, systematic, and overall uncertainty for each day in each 2-week study period were found using the above method. A summary of the daily volume uncertainties for the September 1998 study period appears in Table 9.

Table 9
Estimated Uncertainties for Daily Volumes in September 1998 Study Period

Date	CV_{Vb} (%)	CV_{Vr} (%)	CV_V (%)	CI_V (%)
September 1	±0.81	± 0.50	± 0.95	± 1.97
September 2	± 0.77	± 0.48	± 0.91	± 1.89
September 3	± 0.80	± 0.50	± 0.95	± 1.96
September 4	± 0.81	± 0.50	± 0.95	± 1.96
September 5	± 0.75	± 0.48	± 0.89	± 1.85
September 6	± 0.70	± 0.46	± 0.84	± 1.74
September 7	± 0.83	± 0.51	± 0.97	± 2.01
September 8	± 0.90	± 0.53	± 1.04	± 2.16
September 9	± 0.90	± 0.53	± 1.04	± 2.15
September 10	± 0.83	± 0.51	± 0.98	± 2.02
September 11	± 0.81	± 0.50	± 0.95	± 1.97
September 12	± 0.77	± 0.48	± 0.91	± 1.88
September 13	± 0.78	± 0.48	± 0.92	± 1.90
September 14	± 0.86	± 0.52	± 1.01	± 2.08

C. Uncertainty of Annual Volume Measurements

The uncertainty in the annual volume pumped through the station can be estimated using the estimated uncertainty in daily volume measurements. As mentioned earlier, the study period consisted of 2-week periods in September 1998, and February and May of 1999. In total, there were 42 days in the study period. Over this time period, the average systematic uncertainty for a daily volume measurement, CV_b, was determined to be -0.10 ± 0.77 percent (± 0.26 percent from unknown biases and ± 0.72 percent from unknown biases known to be in the same direction for all meters), and the average random uncertainty for a daily volume measurement, CV_r, was estimated to be ± 0.48 percent. The average uncertainty in daily volume would then be -0.10 ± 0.91 percent, and the average 95-percent confidence interval for the daily volume would be -0.10 ± 1.88 percent. The uncertainty in the annual volume pumped through the Springfield Station, CV_V can be determined as follows:

$$CV_V = CV_{b_{\substack{direction \\ known}}} \pm \left(\frac{CV^2_{b_{\substack{direction \\ unknown}}}}{n} + CV^2_{b_{\substack{unknown \\ but\ in\ same \\ direction}}} + \frac{CV_r^2}{n} \right)^{\frac{1}{2}}$$

$$= -0.10 \pm \left(\frac{0.26^2}{365} + 0.77^2 + \frac{0.48^2}{365} \right)^{\frac{1}{2}} = -0.10 \pm 077\%$$

Equation (13)

The 95-percent confidence interval of the annual volume, CI_v, would then simply be -0.10 ± 1.51 percent (-0.10 ± [0.77 times 1.960]). The 95-percent confidence interval for the annual volume (-0.10 ± 1.51 percent) is slightly less than the 95-percent confidence interval for the daily volume (-0.10 ± 1.88 percent). Most of the random error and unknown bias error associated with the daily volume measurement is statistically canceled when determining the uncertainty of the annual volume.

4. Quality Assurance

If the water accounting system is moved to the lakefront, there is a concern that if one of the direct diverter's flow measurement systems goes down, that there would be no way to measure the withdrawals from the lake. Thus, it is desirable that the direct diverters have a backup measurement system and, if possible, some other independent check on the measurements to ensure that the measurements are reasonable and accurate.

There are many backup systems at the Springfield Station. If a problem is detected in a particular venturi meter or its corresponding pressure transmitter, that venturi meter and its pump can be shutdown and a different venturi and pump can be used in its place for metering and distribution. Also, all of the venturi meters at the Springfield Station are equipped with manometers that can be used as a backup to the pressure transmitters.

The SCADA system used to totalize the flow consists of several elements. A schematic of the SCADA system showing the flow and storage of data is provided in Appendix B. The signal from each pressure transmitter is sent to a computer (CP2), located at the plant, where the flow data is displayed, processed, and temporally stored. This computer is only capable of storing 3-days' worth of data. Therefore, the control center computer system (CP3) located at the Jardine water treatment plant reads the data from the CP2 and is responsible for storing and maintaining the flow records. Note that if CP2 were to fail, the data would not be communicated to CP3. The CP3 central control computer system consists of two computers with automatic failover such that if one computer fails, the other one takes over automatically. Both of these computers store data from the pumping station so none of the data should be lost in the event that either computer fails. The data stored on CP3 is also backed up on tape.

The data is transferred from the CP2 computer at the plant to the CP3 computer at Jardine over a dedicated communication line (i.e., a telephone line). This communication line does not have a backup. However, since the CP2 at the station can store up to 3 days' of data, no data will be lost if the line is repaired within 3 days.

If the SCADA system were to fail, flow data can still be obtained from the chart recorders or manometers at the Springfield Station. This data would then be manually inputted in the SCADA system once the problems with the SCADA system were corrected.

The chart recorder system is used as an independent check of the flow measurement system used at the Springfield Station. If the average of the 24-hour readings on the daily log sheet differs by more than 2 percent from the chart recorder, the City investigates the source of the discrepancy. Thus, by monitoring the difference between the chart recorder and the daily log sheets, the City will be able to catch malfunctions in their measurement system relatively quickly.

5. Summary of Inadequacies in the Current Metering Systems

For the most part, the current metering system provided a reasonable level of accuracy and has acceptable quality assurance. The following portion of the metering system appears to be deficient.

- The actual venturi meters are not calibrated. Rather, the City assumes that the manufacturer's rating curves are correct. Calibration of the venturis would confirm or deny this assumption.

- The overall accuracy in estimating the water supply pumpage is dependent upon many measurement and analysis functions. The documented technical review and much previous work were focused on the accuracy of the pumpage measurements in hardware (i.e., meters, calibrator, pressure transmitter, etc.) and software (SCADA, etc.). This analyses does not take into account procedural errors such as inconsistent data in water supply pumpage as a result of the reporting mechanism.

6. Recommendations for Long-Term QA/QC and Improvements to Metering

Recommendations for long-term QA/QC and improvements to metering are as follows:

- Calibration of the venturi meters to determine if the manufacturer's rating curves are valid.
- Occasional inspection and measurement, if physically possible, of the inlet and throat of the venturi meters to determine any possible presence and effects of corrosion and tuberculation on the meter's accuracy.
- Routine auditing of various water withdrawal reports, as part of the long-term QA/QC, as a means of accounting for procedural errors.

7. Conclusions

Some of the important conclusions are summarized below:

- For operational purposes, the City can determine the hourly flow measurement reading to within -0.10 ± 5.55 percent at the Springfield Station. This value takes into account the random and systematic uncertainty associated with the venturi meters, pressure transmitters, calibration equipment, and recording system.

- On an annual basis, the total volume pumped through the station can be determined to within -0.10 ± 1.51 percent. The 95-confidence interval for the annual volume is narrower than the 95-percent confidence interval for the hourly flow measurements made at the Springfield Station because the random and unknown bias errors associated with the measurement are statistically canceled when the measurements are summed over a year's time.

- There is some form of backup system for all the measurements made at the Springfield Station. No loss of flow data is likely under most conditions.

- The chart recorders at the Springfield Station can be used as a check on the flow measurement system. The difference between the chart recorders and the daily log sheets should be less than 2 percent. A difference greater than 2 percent indicates there may be a problem within the flow measurement system.

References

American Society of Mechanical Engineers, *Fluid Meters: Their Theory and Application.* ASME, New York, 6th ed., 1971.

Ametek Power Instruments, "Rochester DPG-700 Precision Digital Pressure Gauge," http://www.rochester.com.

Analog Input Module PPX:505-6108A Electrical Specification [for the SCADA system], n.d.

City of Chicago. Correspondence between Mr. R. W. Pence of the City of Chicago and David Clemmans of Energy Associates Inc., regarding the "BIF Flow Metering Equipment," August 18, 1977.

Fisher-Rosemount, *Model 1151 Smart Pressure Transmitters*, Rev. A1, n.d.

International Organization for Standardization, *Measurements of Fluid Flows by Means of Pressure Differential Devices*, ISO, Switzerland, 1991.

Mead & Hunt, Inc., *Technical Review of Lake Michigan Water Withdrawals by the City of Evanston–Draft*, July 2002.

Mead & Hunt, Inc., *Technical Review of Lake Michigan Withdrawals – Southwest Pumping Station*, July 2002.

Meriam Instrument, *General Installation, Operation and Maintenance Instructions for Meriam Manometers*, April 1992.

Miller, Richard W., *Flow Measurement Engineering Handbook*, McGraw-Hill, New York, 1996.

Spitzer, David W., *Industrial Flow Measurement.* Instrument Society of America, North Carolina, 1990.

Final Report

Technical Review of Lake Michigan Withdrawals Thomas Jefferson Pumping Station

City of Chicago

Prepared for:

U.S. Army Corps of Engineers - Chicago District
Chicago, Illinois

Prepared by:

MEAD & HUNT

August 2003

Table of Contents

Page

Executive Summary . . . . . E-i

1. General Description 1
   A. Summary of Operation 1
   B. Flow Measurement 1
   C. Flow Totalization 2
   D. Calibration 2

2. Uncertainty in Metering and Measurement Components 4
   A. Venturi-Type Meters 4
   B. Pressure Taps 4
   C. Meter Installation 5
   D. Sampling 7
   E. Pressure Differential Measurement 8
   F. Dry Calibration of Pressure Transmitters 8
   G. SCADA System 9

3. Sample Uncertainty Calculation for Effluent Meters 10
   A. Uncertainty of Hourly Flow Measurements 10
      (1) Systematic (Bias) Error 10
      (2) Random Error 16
      (3) Combining Systematic and Random Errors 16
   B. Uncertainty of Daily Volume Measurements 18
   C. Uncertainty of Annual Volume Measurements 20

4. Quality Assurance 22

5. Summary of Inadequacies in the Current Metering Systems 23

6. Recommendations for Long-Term QA/QC and Improvements to Metering 24

7. Conclusions 25

References 26

List of Tables

Table		Page
1	Summary of Venturi-type Meters Used at the Thomas Jefferson Pumping Station	2
2	Upstream Disturbances and Approximate Approach Lengths for the Various Venturi Meters at the Thomas Jefferson Station	6
3	Summary of Required and Actual Downstream Straight Pipe Lengths at the Thomas Jefferson Station	6
4	Results of the Random Complete Block Design Comparisons for the Mayfair, Central Park, Roseland, Springfield, and Western Pumping Stations	7
5	Uncertainty from the Pressure Transmitters and Calibration Equipment for the First Hourly Reading on February 1, 1995, for Venturi No. 4	13
6	Absolute Bias Estimates for the First Hourly Readings Taken on February 1, 1995	15
7	Systematic, Random, and Overall Uncertainty Estimates for Hourly Flow Measurement Made on February 1, 1995	17
8	Estimated Uncertainties for Daily Volumes in February 1995 Study Period	20

List of Appendices

Appendix

A Schematic of the Thomas Jefferson Station

B Schematic of the SCADA System

Executive Summary

Currently, diversion of water from Lake Michigan for the state of Illinois is measured at the Chicago Sanitary and Ship Canal at Romeoville. The Great Lakes Mediation Memorandum of Understanding established a lakefront diversion accounting system and specified a 3-year transition period to assess the technical acceptability of moving the diversion measurement system to the lakefront. A lakefront diversion accounting system requires metering of all domestic water withdrawals from Lake Michigan and the direct diversions into the Chicago Sanitary and Ship Canal system at the Chicago River, the Calumet River, and the North Shore Channel at Wilmette. During the 3-year transition period, the U.S. Army Corps of Engineers (USACE) has been tasked to initiate a technical review of the accuracy of the reported domestic withdrawals from Lake Michigan.

The USACE retained Mead & Hunt, Inc. to evaluate the accuracy of domestic withdrawals from Lake Michigan. A total of 12 pumping stations in the city of Chicago (City) and six suburban pumping stations will be evaluated. These evaluations include revisions to the investigations conducted on the City's Mayfair and Thomas Jefferson Stations and the city of Evanston's Station by the Illinois District of the U.S. Geological Survey. This report presents a summary of the flow measurement techniques at the Thomas Jefferson Station as employed by the City, as well as estimates of the uncertainty of daily and annual volume measurements. Presently, the Thomas Jefferson Station consists of four electrically operated pumps and four venturi-type meters.

To obtain an estimate of the uncertainty of an individual flow measurement, we examined the manufacturer's accuracy specifications for both the primary flow measurement devices (i.e., the venturi-type meters) and secondary measurement devices (i.e., the pressure transducers). The Thomas Jefferson Station's calibration technique, sampling technique, and device installation were also examined. All of the sources of uncertainty identified from this analysis were then classified as either random or systematic in nature. Using this information and the data logs provided by the City, we obtained an estimate of the uncertainty of an individual flow measurement. From this information, an estimate of the uncertainty of the daily and annual volume withdrawn from the lake can be obtained using standard statistical techniques.

Some of the important conclusions are summarized below:

- For operational purposes, the City can determine the hourly flow measurement reading to within -0.50 ± 3.33 percent at the Thomas Jefferson Station. This value takes into account the random and systematic uncertainty associated with the venturi meters, pressure transmitters, calibration equipment, and recording system.

- On an annual basis, the total volume pumped through the station can be determined to with -0.50 ± 0.55 percent. The 95-confidence interval for the annual volume is narrower than the 95-percent confidence interval for the hourly flow measurements made at the Thomas Jefferson Station because the random and unknown bias errors associated with the measurement are statistically canceled when the measurements are summed over year's time.

- With the exception of the SCADA system, the entire metering system has redundancy or backup for quality assurance. There is no backup data recorder at this time.

- There is no independent check of the flow measurement system that can be used as an indicator when there is a problem within the system.

Technical Review of
Lake Michigan Withdrawals
Thomas Jefferson Pumping Station

City of Chicago

1. General Description

A. Summary of Operation

The Thomas Jefferson Pumping Station consists of four pumps and four venturi-type meters. Each pump in the Thomas Jefferson Pumping Station is dedicated to a certain venturi-type meter. The pressure differentials on these venturi-type meters are measured using Gould pressure transmitters. The output signal from these pressure transmitters is transmitted to a Supervisory Control and Data Acquisition (SCADA) system for totalization. The SCADA system samples the pressure transmitter signal every five minutes. These five-minute readings are then used to determine the average daily volume pumped through the venturi-type meters. Unlike the steam operated pumping stations, such as Mayfair, there are no continuous chart recorders at the Thomas Jefferson Pumping Station. A schematic of the Thomas Jefferson Station is provided in Appendix A.

B. Flow Measurement

The Thomas Jefferson Pumping Station uses four venturi-type meters to measure the flow pumped through the station. The four venturi-type meters in the Thomas Jefferson Pumping Station are Simplex venturi nozzles that were installed in 1928. The Simplex venturi nozzle is a proprietary variation of the classical Herschel-type venturi meter. These flow tubes are designed to produce higher pressure differentials than classical venturi meters. They are also designed to have a lower permanent pressure loss, a lower weight, and a shorter overall length (Miller, 1996). The four Simplex venturi tubes are all the same and their specifications are listed in Table 1.[1]

[1] The coefficient of discharge was calculated using Equation (1) of this report and the beta-ratio, venturi diameter, maximum flow and maximum differential pressure that was provided by the city of Chicago.

Table 1
Summary of Venturi-type Meters Used at the Thomas Jefferson Pumping Station

Manufacturer	Simplex
Model Number	36-73-7980CK
Approach Pipe Diameter (in..)	36
Throat Diameter (in.)	25
β-ratio	0.6944
Coefficient of Discharge	0.988
Max. Flow Rate (MGD)	75
Max. Differential Pressure (in. of water)	170

C. Flow Totalization

Flow is totalized using only one method at the Thomas Jefferson Pumping Station. The output from the pressure transmitters is sent to the SCADA system. The SCADA system samples the output from the pressure transmitters every 5 minutes. The pressure transmitter signal is divided by an integrator constant to convert it to a volume measurement. The sum of the 288, 5-minute readings is then used to determine the volume pumped through the system on a daily basis. There are no chart recorders at the Thomas Jefferson Pumping Station.

D. Calibration

An effective calibration procedure should calibrate both the primary flow meter and its secondary measurement device. First, the secondary measurement device, such as a pressure transmitter, should be calibrated to make sure it is reading correctly. Then, the flow meter itself should be calibrated to make sure it is functioning properly. The city of Chicago does not perform any wet calibrations on the primary flow meters or their secondary measurement devices. Thus, all of the city of Chicago's calibrations can be considered inferential in nature. The secondary measurement devices (i.e., the pressure transmitters, totalizers, etc.) are dry calibrated once a year. If the city of Chicago notices a problem or discrepancy, the instruments are checked and calibrated within one to two working days. When a pressure transmitter or totalizer is calibrated, a full dry calibration is performed using an RIS DPG-700 pressure gauge. This pressure gauge provides a "calibrated" differential pressure that can be used to determine if the pressure transmitter or totalizer is reading properly. For the primary flow measurement devices, the city of Chicago assumes the manufacturers' rating tables are correct.

After all the individual instruments have been dry calibrated, the city of Chicago performs an end-to-end calibration of the pumping station. When an end-to-end calibration is performed, the venturi-type meters are connected to manometers in order to obtain the pressure differentials. After an hour has passed, the volume measured by the manometer readings is compared to the volume measured by the totalizer. The city of Chicago wants the difference between these two readings to be less than 2 percent. This type of calibration is done to ensure that all the secondary measurement devices are working together properly. During the calibration, the City takes readings both from the Meriam manometers and from the calibrated flow signal over a period of time, typically at least one hour. The averages of both sets of data are compared and if a significant difference in readings is detected, the calibrators are sent out for re-calibration and re-certification. The last re-calibration was April 2000. Per the manometer's specifications, the "NIST recognizes the U-type Manometer as a primary standard due to its inherent accuracy and simplicity of operation." The manometers do not require calibration, therefore comparing the values from the calibrated flow signal to the manometer's readings is a reasonable method of checking whether the calibrators should be re-certified.

2. Uncertainty in Metering and Measurement Components

A. Venturi-Type Meters

The manufacturer's specifications indicate that the Simplex venturi tubes have an uncertainty of ± 0.50 percent of actual flow rate under dry calibration conditions. The manufacturer also states that if tuberculation has occurred near the main piezometer taps or just ahead of the bronze throat liner, then there would be a detrimental effect on the meter accuracy. Because the meters have been in use for about 70 years, it is entirely possible that some pitting and corrosion would have occurred in these critical areas.

The City has not inspected any of the meters at the Thomas Jefferson Station. However, the meters at the Thomas Jefferson Station are similar to the meter inspected by the City at the Southwest Station in that the throats of the meters are lined with bronze. Bronze is known for its ability to resist corrosion and formation of tubercles. Therefore, it is reasonable to assume that any significant corrosion or tuberculation would occur on the inlet piping only. This was the case when the meter was inspected at the Southwest Station. Since the water pumped through the Thomas Jefferson Station and the Southwest station have the same water chemistry and are treated in the same manner, it is assumed that if the venturi's at the Thomas Jefferson Station were inspected, the results would be similar to the results of the meter inspection at the Southwest Station. Therefore, based on the determinations made in the *Technical Review of Lake Michigan–Southwest Pumping Station*, any error due to corrosion and tuberculation is considered insignificant at the Thomas Jefferson Station.

B. Pressure Taps

The pressure taps that are used to measure the pressure should be square with no roughness, burrs, or wire edges (Miller, 1996). If this were not the case, then a bias error would be introduced due to the pressure taps. As mentioned earlier, it was not practical to inspect the pressure taps of these meters. However, these flow measurement devices were all constructed under a controlled manufacturing environment with very little opportunity for a pressure tap to be constructed poorly. Thus, it was assumed that the manufacturer constructed the pressure taps correctly and that no additional error would be introduced due to the pressure taps. Any uncertainty due to pitting around the pressure tap was already taken into account in the previous section.

C. Meter Installation

An appropriate length of straight, circular pipe is required upstream of the flow meter to guarantee that the velocity profile entering the meter is not distorted and that the meter will perform properly. The length of this approach section depends on number and types of bends and fittings located upstream of the meter.

Table 2 lists the approximate approach length and upstream fittings for the various venturi meters located at the Thomas Jefferson Pumping Station. The "Required Approach Length for Zero Error" and the "Required Approach Length for 0.5 Percent Error" values reported in Table 2 were taken from ISO 5167-1:1991.

As shown in Table 2, all four meters do not have the required minimum lengths for the first upstream lengths of pipe, but do have the minimum required lengths for the second upstream lengths of pipe. In all four meter's cases, the actual first upstream length of pipe falls between the required minimum length for zero error and the required minimum length for 0.5 percent error.

ISO 5167-1:1991 reference materials only provide lengths for zero error and 0.5 percent error. Therefore, although the first upstream lengths of pipe fall between the minimum requirements for zero error and 0.5 percent error, the actual error value in this situation is unknown. To be conservative, 0.5 percent error will be assumed in these instances. Given these assumptions, all four meters are assumed to have an additional 0.5 percent of error since their upstream piping does not meet the minimum upstream piping requirements.

These inadequate pipe lengths will cause a distorted flow profile with little swirl at the venturi meter. No information was available for the bias direction for a distorted profile with little swirl. Miller reported that if a swirl was produced at the venturi meter, the flows tend to be under-reported Therefore, it is assumed that for this application the flows of a distorted flow profile without swirl will also be under-reported. Given this, the errors for all four meters will be -0.5 percent.

Table 2
Upstream Disturbances and
Approximate Approach Lengths for the
Various Venturi Meters at the Thomas Jefferson Station

Venturi No.	First Upstream Fitting	First Upstream Approach Length (feet)	Required Pipe Length for Zero Error (feet)	Required Pipe Length for± 0.5% Error (feet)	Second Upstream Fitting	Second Upstream Approach Length (feet)	Required Pipe Length for Zero Error (feet)	Required Pipe Length for ± 0.5% Error (feet)
1	Single bend	12	12	6	Valve	9	8	5
2	Valve	15	17	11	Single bend	28	6	3
3	Valve	15	17	11	Single bend	28	6	3
4	Single bend	12	12	6	Valve	9	8	5

Inadequate straight piping downstream of the meter can also affect the meter's accuracy. ISO 5167-1:1991 reference materials indicate that as long as the downstream length of straight piping exceeds four times the meter's throat diameter, no additional error is expected. Unlike for the upstream piping lengths, the ISO 5167-1:1991 reference does not indicate what length would be required to provide an uncertainty of 0.5 percent or any other uncertainty value. The required and actual downstream lengths of straight pipe are summarize in Table 3. In all cases, the downstream straight pipe lengths are adequate to ensure no additional error due to downstream piping geometry.

Table 3
Summary of Required and Actual Downstream Straight Pipe Lengths
at the Thomas Jefferson Station

Venturi No.	Throat Diameter (feet)	Required Downstream Pipe Length for Zero Error (feet)	Actual Downstream Pipe Length (feet)	Meets Required Downstream Pipe Length?
1	2	8	11	Yes
2	2	8	19	Yes
3	2	8	19	Yes
4	2	8	11	Yes

D. Sampling

Additional uncertainty can also be introduced due to how the flow measurement data is recorded. If, for example, a quantity varies sinusoidally, but that quantity is only measured at the times when the quantity is at a peak, then the average measurements will be higher than the true average. This would introduce a bias into the system. On the other hand, if a quantity is measured or sampled frequently, then there will be very little error introduced due to the sampling. The flow rates at the Thomas Jefferson Station are sampled every five minutes, and these 5-minute readings are used to determine the average daily volume pumped through the station. Unlike the some of the other Chicago stations, there are no continuous chart recorders with which to compare the 5-minute readings at the Thomas Jefferson Station. Thus, the Thomas Jefferson Station data alone is not sufficient to determine whether the 5-minute readings are adequate.

The Mayfair, Central Park, Roseland, Springfield, and Western Pumping Stations all have average daily flows from chart recorder data to compare to their instantaneous 1-hour SCADA readings. A randomized complete block design was preformed on the data for these five stations and their results are provided in Table 4.

Table 4
Results of the Random Complete Block Design Comparisons for the Mayfair, Central Park, Roseland, Springfield, and Western Pumping Stations

Station	Number without Statistical Difference	Number with Statistical Difference
Central Park	2	4
Mayfair	25	3
Roseland	4	7
Springfield	5	1
Western	6	0

As shown in Table 4, the results are not consistent among the five stations tested. The results from the Mayfair, Springfield, and Western Stations indicate that in more cases than not there is no statistical difference between averages. The opposite is true for the Central Park and Roseland Stations. However, the statistical comparison was between the average daily volume from the chart recorder and average of 24 one-hour instantaneous SCADA readings, since 5-minute SCADA readings were not available. The actual daily flow volume that is recorded for LMO reporting is based on 5-minute readings at the Thomas Jefferson Station. Therefore, a possibility still exists that the chart recorder's daily average flow and the SCADA's daily flow based on 5-minute readings could be statistically the same.

It is assumed that sampling frequency does not produce an additional source of error at the Thomas Jefferson Station since the combined results from the Mayfair, Central Park, Roseland, Springfield, and Western Pumping Stations indicate that it is more likely than not that sampling frequency at the Thomas Jefferson Station is adequate.

E. Pressure Differential Measurement

The pressure differential on all the venturi-type meters is measured using Gould pressure transmitters. It was assumed that the accuracy specifications provided by the manufacturer were correct. Linearity, hysteresis, repeatability, stability, and temperature effects were considered the most important components of the overall accuracy of the pressure differential measurement using the Gould pressure transmitters. The manufacturer also indicates that there may be static pressure, vibration, electromagnetic induction (EMI), power supply, load, and mounting position effects. However, it was assumed that these factors were insignificant compared to the others.

The upper range limit (URL) for the Gould transmitters is 170 inches of water. Gould states that the accuracy of their pressure transmitters is ± 0.25% of URL. This accuracy includes the effects of linearity and hysteresis. The combination of these errors was assumed to be systematic in nature. The repeatability is listed by the manufacturer as ± 0.1% of URL. This error was also assumed to be systematic in nature. The stability is listed by the manufacturer as ± 0.25% of URL per 6 months. To set a maximum error limit, the entire uncertainty due to stability was used. The bias introduced due to temperature effects is listed by the manufacturer as ± 1.0 of URL from –20 to 180 F. The lake temperature varies from about 32 to 70 F. This is approximately a 40 F temperature range. Again, to set a maximum error limit, the entire range of temperatures was considered in estimating the uncertainty due to temperature effects. Thus, the bias due to the temperature effects would be about ± 0.20% of URL. All of these uncertainty components are systematic in nature with an unknown bias direction.

F. Dry Calibration of Pressure Transmitters

The secondary measurements devices (i.e., pressure transmitters) are calibrated once a year using a Rochester DPG-700 module. Because the pressure transmitter is adjusted to the Rochester DPG-700 reading, all of the uncertainty components of the Rochester DPG-700 module will become a bias reported by the Rosemount 1151 pressure transmitter. Since both pressure and current readings are taken from the Rochester DPG-700 module during calibration, two accuracy values apply. For the pressure reading, the accuracy is reported to be ± 0.05 percent of full scale plus one digit of display. Based on manufacturer's specification, the pressure display is shown to 0.002 pounds per square-inch gauge (PSIG), which is equal to 0.055 inches of water. The range of the Rochester DPG-700 module is 0 to 30 pounds per square inch ([psi] or 830.80 inches of water). The current reading's uncertainty is reported as ± 0.05 percent of full scale plus one digit of display. The upper range limit for the current is 50 mA. The current resolution is 0.005 mA. Note, however, that the two parameters of the calibrator (accuracy of the pressure module and accuracy of the current multimeter) may not be totally

uncorrelated since the pressure transmitter converts a physical measurement, the pressure, into an electrical signal while the multimeter loop current appears to be correlated to the pressure from the pressure module. Although, these parameters may not be totally uncorrelated, it was not accounted for in this analysis. The direction of these biases, although unknown, will be in the same direction for all four meters in the Thomas Jefferson Station.

G. SCADA System

In order for the SCADA system to determine the volume pumped through the Thomas Jefferson station, the analog signal from the pressure transmitter was converted to a digital signal using an analog input module. The manufacturer's specifications state that the analog to digital conversion is accurate to within ± 1.25 percent of full scale. In this case, the full scale was assumed to be the full scale of the venturi-type meter to which the pressure transmitter was connected. The error due to the analog to digital conversion should be random in nature.

3. Sample Uncertainty Calculation for Effluent Meters

To demonstrate how the uncertainty of the measured volume pumped through the Thomas Jefferson Station was estimated, a series of sample calculations follows. The method used to estimate the uncertainty is similar to that described in the *Technical Review of Lake Michigan Water Withdrawal by the City of Evanston*. Please refer to that document for background on the statistical handling of measurement uncertainty. The city of Chicago provided the hourly logs for eight 2-week periods. These time periods occurred in February, May, July, and September of 1995 and 1997. It was assumed that the Thomas Jefferson station's pumpages over these time periods were representative of the typical pumpages. It was also assumed that Thomas Jefferson's pumpages were constant over each hour reported on the daily log sheets. The uncertainty of the hourly and daily readings can be obtained using these assumptions. The uncertainties can be reported as the standard deviation of the measurements (expressed by the variable s) or in relative terms (expressed by the variable CV, which is the standard deviation of the measurements divided by the mean of the measurements).

A. Uncertainty of Hourly Flow Measurements

(1) Systematic (Bias) Error

The majority of the error components are systematic in nature. These systematic errors include error from the venturi, inadequate approach length, the pressure transmitters, and the calibration equipment. To determine the uncertainty of the hourly flow measurements, all uncertainties need to be in terms of percent accuracy of actual rate. The errors associated with the venturi and the inadequate approach lengths are already expressed in these terms. However, the accuracy associated with the pressure transmitters and calibration equipment are in terms of percent accuracy of the upper range limit (URL) or full scale (FS).

The standard equation for the flow through a venturi-type meter is:

$$Q = \frac{C_d A_t}{\sqrt{1-\beta^4}} \sqrt{2g\Delta h} \qquad \textit{Equation (1)}$$

Where:

Q	=	Flow rate
C_d	=	Discharge coefficient
A_t	=	Area of the throat section

β	=	Ratio of the throat diameter to the approach section diameter (also referred to as the beta-ratio)
g	=	Acceleration due to gravity
Δh	=	Pressure differential across the meter

The Thomas Jefferson Station is using a value of 0.988 for the discharge coefficient. This is a typical value for these venturi-type meters

Note that the model assumes that the discharge coefficient, throat area, and throat to approach diameter ratio (i.e. β-ratio) introduce no errors to the discharge calculations. That is, the differential pressure head of the venturi meter is the only source of error or uncertainty.

The venturi-type meters at the Thomas Jefferson Pumping Station are dedicated to a particular pump and the flow measurement setup for all four of the venturi-type meters is identical. For illustration purposes, the day of February 1, 1995, will be examined. On this day, all of the flow is passed through venturi 4. The throat area, *At*, for this venturi-type meter is:

$$A_t = \frac{\Pi(25.0)^2}{4} = 490.9in^2 = 3.41ft^2 \qquad \textit{Equation (2)}$$

For the first hour on February 1, 1995, 62 MGD was flowing through venturi 4. The pressure differential for venturi No. 4 is calculated below using Equation (1), and the β-ratio of 0.6944 from Table 1.

$$\Delta h = \left[\frac{Q\sqrt{1-\beta^4}}{C_d A_t \sqrt{2g}}\right]^2 = 12\left[\frac{1.547(62MGD)\sqrt{1-(0.6944)^4}}{(0.988)(3.41ft^2)\sqrt{2(32.16ft/s^2)}}\right]^2 = 116.1in. \qquad \textit{Equation (3)}$$

The values of 12 and 1.547 that appear in *Equation (3)* are unit conversion factors to convert feet to inches and MGD to cubic feet per second (cfs), respectively.

Next, the uncertainty due to the pressure transmitter needs to be determined. The uncertainty of the pressure transmitter has four components: accuracy, repeatability, stability, and temperature effects. The accuracy of the Gould pressure transmitter is ± 0.25% of URL, which translates into ± 0.425 inches of water (i.e., ± 0.0025 times 170). The uncertainty in the flow rate due to the accuracy of the pressure transmitter would then be:

$$CV_{Qa} = \frac{Xs_p}{\Delta h} = \frac{(0.5)(\pm 0.425in)}{116.1in} = \pm 0.183\% \qquad \textit{Equation (4)}$$

Where:

CV_{Qa}	=	Uncertainty in the flow rate due to the accuracy of the pressure transmitter,
s_p	=	Uncertainty in the pressure transmitter (due to transmitter accuracy in this case)
X	=	Sensitivity coefficient for the pressure transmitter
Δh	=	Pressure differential

See *Technical Review of Lake Michigan Water Withdrawals by the City of Evanston* for a discussion of the sensitivity coefficient, *X*. The uncertainty in the flow rate due to the transmitter's accuracy, repeatablity, stability, and temperature affect for meter No. 4 is shown in Table 5.

The pressure transmitters are calibrated using a Rochester DPG-700 calibrator. Since both pressure and current readings are taken from the calibrator, two independent accuracy values apply. For the pressure reading, the accuracy is reported to be ± 0.05 percent of full scale, plus one digit of display. Based on manufacturer's specification, the pressure display is shown to 0.002 PSIG, which is equal to 0.055 inches of water. The range of the Rochester DPG-700 module is 0 to 30 psi (or 830.80 inches of water). Thus, the uncertainty in the pressure component of the calibrator would be ± 0.470 inches of water (i.e., ± 0.0005 times 830.80, plus 0.055) for venturi meter No. 4. The uncertainty in the flow rate due to pressure component of the calibrator for venturi meter No. 4 would then be:

$$CV_{Qa} = \frac{Xs_p}{\Delta h} = \frac{(0.5)(\pm 0.470in)}{116.1in} = \pm 0.203\% \qquad \textit{Equation (5)}$$

The current reading's uncertainty is reported as ± 0.05 percent of full scale, plus one digit of display. The upper range limit for the current is 50 mA. The current resolution is 0.005 mA. Thus, the uncertainty in the current component of the calibrator would be ± 0.030 mA (i.e., ± 0.0005 times 50, plus 0.005) for venturi meter No. 4. The uncertainty in the flow rate due to the current component of the calibrator for venturi meter No. 4 would then be:

$$CV_{Qa} = \frac{Xs_i}{\Delta i} = \frac{(1.0)(\pm 0.030mA)}{17.2mA} = \pm 0.174\% \qquad \textit{Equation (6)}$$

Where:

s_i	=	Uncertainty due to the current reading for the calibrator pressure differential
Δi	=	Current differential

The current differential is known to be linear to the flow rate with 4 mA corresponding to zero flow, and 20 mA corresponding to flow meter capacity, which is 75 MGD for meter No. 4. Using this relationship, for the first hour on February 1, the corresponding current would be 17.2 mA for meter Nos. 4. Note that for this calculation, the sensitivity coefficient, X, is 1.0 since the flow rate is directly proportional to the current (i.e. a linear relationship). A summary of these estimates appears in Table 5.

Table 5
Uncertainty from the Pressure Transmitters and Calibration Equipment for the First Hourly Reading on February 1, 1995, for Venturi No. 4

Venturi No.	Instrument	Uncertainty Source	CV for Δh or ΔmA	URL or Calibrated Span	Uncertainty for Δh or ΔmA	CV for Flow (%)
4	Gould Pressure Transmitter	Accuracy	0.25% of URL	170 in. Water	0.425 in. Water	0.183
4	Gould Pressure Transmitter	Repeatability	0.1% of URL	170 in. Water	0.170 in. Water	0.073
4	Gould Pressure Transmitter	Stability	0.25% of URL	170 in. Water	0.425 in. Water	0.183
4	Gould Pressure Transmitter	Temperature Effect	1.0% URL /200°F	170 in. Water	0.340 in. Water	0.146
4	DPG-700	Calibrator	0.05% FS + 1 digit*	830.8 in. Water	0.470 in. Water	0.203
4	DPG-700	Calibrator	0.05% FS + 1 digit**	50 mA	0.030 mA	0.174

* *One digit is equal to 0.055 in. Water*

** *One digit is equal to 0.005 mA*

In this study, the bias uncertainty estimates will be broken down into three categories:

- Bias uncertainty with a known bias direction
- Bias uncertainty with an unknown bias, but known to be in the same direction for each meter
- Bias uncertainty with an unknown bias direction

Explanation of this breakdown was detailed in the *Technical Review of Lake Michigan Water Withdrawal by the City of Evanston*. Table 6 lists the type of bias uncertainty for each of the bias estimates for the first hourly readings for venturi meter No. 4. Additionally, Table 6 also provides the absolute bias estimates for the first hourly readings taken from venturi meter No. 4 based on the following equation:

$$s_b = CV_{flow} \cdot Q_{\substack{first \\ hour}} = (0.00183)(62MGD) = 0.113MGD \qquad \textit{Equation (7)}$$

Where:

S_b	=	Standard deviation (or absolute uncertainty) of the flow measurement due to the respective systematic uncertainty estimate
CV_{flow}	=	Relative uncertainty in the flow rate
$Q_{first\ hour}$	=	Flow for the first hour

Table 6
Absolute Bias Estimates for the First Hourly Readings
Taken on February 1, 1995

Venturi No.	Bias Component	Type of Bias	CV_b (%)	S_b (MGD)
4	Venturi	Direction unknown	±0.500	±0.310
	Approach lengths	Direction known	- 0.500	- 0.310
	Pressure transmitters			
	– *Accuracy*	Direction unknown	±0.183	±0.113
	–*Repeatability*	Direction unknown	±0.073	±0.045
	– *Stability*	Direction unknown	±0.183	±0.113
	– *Temperature*	Direction unknown	±0.146	±0.091
	Calibrator			
	– *Pressure*	Direction unknown,	± 0.203	± 0.126
	– *Current*	but in same direction for all meters	± 0.174	± 0.108

The systematic uncertainty estimates for meter No. 4 can be combined as shown below in *Equation (8)* to determine the overall hourly systematic uncertainty for February 1, 1995. To determine the uncertainty of the sum of the measurements, the individual uncertainty estimates should be combined on the basis of absolute uncertainty (i.e., standard deviations) and not relative uncertainty (i.e., coefficient of variation).

$$S_b = \sum_{i=1}^{l_1}\sum_{j=1}^{m} S_{b_{ij\ \text{direction known}}} \pm \left[\sum_{i=1}^{l_2}\sum_{j=1}^{m} S^2_{b_{ij\ \text{direction unknown}}} + \sum_{i=1}^{l_3}\left(\sum_{j=1}^{m} S_{b_{ij\ \text{unknown but in same direction}}}\right)^2\right]^{\frac{1}{2}} \qquad \textit{Equation (8)}$$

Where:

S_b	=	Combined uncertainty or standard deviation of the flow measurement
$S_{bij\ \text{direction known}}$	=	Absolute bias uncertainty of known direction for measurement *i,j*
$S_{bij\ \text{unknown but in same direction}}$	=	Absolute bias uncertainty of unknown direction but known to occur in the same direction for each meter for measurement *i,j*

$S_{bij\ direction\ unknown}$	=	Absolute bias uncertainty of unknown direction for measurement *i,j*
m	=	The number of meters
l_1, l_2, l_3	=	The number of uncertainty components in $S_{bij\ direction\ known}$, $S_{bij\ direction\ unknown}$, and $S_{bij\ unknown\ but\ in\ same\ direction}$, respectively

For the first hour, using *Equation (8)*, the overall absolute bias uncertainty, S_b, was found to be -0.310 ± 0.399 MGD, which corresponds to a relative uncertainty, CV_b, of -0.50 ± 0.64 percent (i.e., -0.310 ± 0.399 MGD divided by the total flow rate of 62 MGD). This process was repeated for each of the 24-hour readings taken during the day. The results are provided in Table 7 (table combining random and bias).

(2) Random Error

Only the SCADA uncertainty was identified as being random in nature. The manufacturer states that the analog-to-digital conversion can take place with an uncertainty of ± 1.25 percent of full scale. As mentioned earlier, it was assumed that full scale refers to full scale of the venturi-type meter. Thus, for venturi No. 4 with a capacity of 75 MGD, the absolute random uncertainty, S_r, due to the SCADA system would be ± 0.94 MGD (± 0.0125 times 75 MGD). Hence, the relative uncertainty estimate, CV_r, for the SCADA system would be ± 1.51 percent (i.e., ± 0.94MGD divided by 62 MGD). This process was repeated for each of the 24-hour readings taken during the day. The results are provided in Table 7 (table combining random and bias).

(3) Combining Systematic and Random Errors

The systematic and random errors can be combined using the following methodology:

$$S_b = \sum_{i=1}^{l_1}\sum_{j=1}^{m} S_{b_{ij\ \substack{direction\\known}}} \pm \left[\sum_{i=1}^{l_2}\sum_{j=1}^{m} S^2_{b_{ij\ \substack{direction\\unknown}}} + \sum_{i=1}^{l_3}\left(\sum_{j=1}^{m} S_{b_{ij\ \substack{unknown\\but\ in\ same\\direction}}}\right)^2 + \sum_{i=1}^{l_4}\sum_{j=1}^{m} S^2_{r_{ij}}\right]^{\frac{1}{2}} \qquad \textit{Equation (9)}$$

Where:

S_{rij}	=	Absolute random uncertainty
l_4	=	The number of uncertainty components in S_{rij}.

Using *Equation (9)*, the overall uncertainty of the sum of the two flow measurements made in the first hour of September 1, 1998, is -0.310 ± 1.02 MGD, or -0.50 ± 1.64 percent.

This process is repeated for each of the 24-hour readings taken during the day and the results can be seen in Table 7. The average uncertainty, *CV*, of an hourly flow measurement performed on September 1 was -0.50 ± 1.66 percent. This implies that the 95-percent confidence interval, *CI*, for an hourly flow measurement would be -0.50 ± 3.43 percent (-0.50 ±[1.66 times 2.069]). Over the entire study period, the average uncertainty of an hourly flow measurement, *CV*, was found to be -0.50 ± 1.70 percent. The average 95 percent confidence interval of an hourly flow measurement, *CI*, would then be equal to -0.50 ± 3.33 percent (-0.50 ±[1.70 times 1.960]).

Table 7
Systematic, Random, and Overall Uncertainty Estimates for Hourly Flow Measurements Made on February 1, 1995

Hour	Total Flow (MGD)	CV_b (%)	S_b (MGD)	CV_r (%)	S_r (MGD)	Overall *CV* (%)
1	62	-0.50 ± 0.64	-0.31 ± 0.399	± 1.51	± 0.938	-0.50 ± 1.64
2	62	-0.50 ± 0.64	-0.31 ± 0.399	± 1.51	± 0.938	-0.50 ± 1.64
3	62	-0.50 ± 0.64	-0.31 ± 0.399	± 1.51	± 0.938	-0.50 ± 1.64
4	61	-0.50 ± 0.65	-0.31 ± 0.398	± 1.54	± 0.938	-0.50 ± 1.67
5	63	-0.50 ± 0.64	-0.32 ± 0.401	± 1.49	± 0.938	-0.50 ± 1.62
6	61	-0.50 ± 0.65	-0.31 ± 0.398	± 1.54	± 0.938	-0.50 ± 1.67
7	63	-0.50 ± 0.64	-0.32 ± 0.401	± 1.49	± 0.938	-0.50 ± 1.62
8	64	-0.50 ± 0.63	-0.32 ± 0.404	± 1.46	± 0.938	-0.50 ± 1.59
9	62	-0.50 ± 0.64	-0.31 ± 0.399	± 1.51	± 0.938	-0.50 ± 1.64
10	60	-0.50 ± 0.66	-0.30 ± 0.396	± 1.56	± 0.938	-0.50 ± 1.70
11	60	-0.50 ± 0.66	-0.30 ± 0.396	± 1.56	± 0.938	-0.50 ± 1.70
12	60	-0.50 ± 0.66	-0.30 ± 0.396	± 1.56	± 0.938	-0.50 ± 1.70
13	60	-0.50 ± 0.66	-0.30 ± 0.396	± 1.56	± 0.938	-0.50 ± 1.70
14	59	-0.50 ± 0.67	-0.30 ± 0.394	± 1.59	± 0.938	-0.50 ± 1.72
15	60	-0.50 ± 0.66	-0.30 ± 0.396	± 1.56	± 0.938	-0.50 ± 1.70
16	59	-0.50 ± 0.67	-0.30 ± 0.394	± 1.59	± 0.938	-0.50 ± 1.72
17	59	-0.50 ± 0.67	-0.30 ± 0.394	± 1.59	± 0.938	-0.50 ± 1.72
18	62	-0.50 ± 0.64	-0.31 ± 0.399	± 1.51	± 0.938	-0.50 ± 1.64
19	62	-0.50 ± 0.64	-0.31 ± 0.399	± 1.51	± 0.938	-0.50 ± 1.64
20	62	-0.50 ± 0.64	-0.31 ± 0.399	± 1.51	± 0.938	-0.50 ± 1.64

Table 7
Systematic, Random, and Overall Uncertainty Estimates for Hourly Flow Measurements Made on February 1, 1995

Hour	Total Flow (MGD)	CV_b (%)	S_b (MGD)	CV_r (%)	S_r (MGD)	Overall CV (%)
21	61	-0.50 ± 0.65	-0.31 ± 0.398	± 1.54	± 0.938	-0.50 ± 1.67
22	61	-0.50 ± 0.65	-0.31 ± 0.398	± 1.54	± 0.938	-0.50 ± 1.67
23	60	-0.50 ± 0.66	-0.30 ± 0.396	± 1.56	± 0.938	-0.50 ± 1.70
24	64	-0.50 ± 0.63	-0.32 ± 0.404	± 1.46	± 0.938	-0.50 ± 1.59

B. Uncertainty of Daily Volume Measurements

An estimate of the uncertainty of the daily volume pumped through the station can be obtained from the 24 hourly flow measurements. The volume pumped through the Thomas Jefferson station is the average of the 24 hourly flow measurements times one day. For February 1, 1995, the average volume pumped through the station is 61.2 million gallons (MG).

The uncertainty of the systematic daily volume measurements can be determined using the following equation:

$$CV_{Vb} = CV_{bV_{\substack{direction\\known}}} + \frac{\Delta t}{m_v}\left(\sum_{k=1}^{n} Q_k^2 CV_{b_{k_{\substack{direction\\unknown}}}}^2 + \left(\sum_{k=1}^{n} Q_k CV_{b_{k_{\substack{unknown\\but\ in\ same\\direction}}}}\right)^2\right)^{\frac{1}{2}} \qquad \textit{Equation (10)}$$

Where:

CV_{Vb}	=	Relative uncertainty of the total bias volume measurement
$CV_{bV\ direction\ known}$	=	Bias with known direction of the total volume measurement
$CV_{bk\ direction\ unknown}$	=	Bias error in individual flow measurement *k* where the bias direction is unknown
$CV_{bk\ unknown\ but\ in\ same\ direction}$	=	Bias error in individual flow measurement *k* where the bias direction is unknown, but in the same direction for all meters

Q_k	=	Value of flow measurement k
m_V	=	Sum of all n volume measurements

Using Equation (10), the relative systematic error, CV_{Vb}, was -0.50 ± 0.30 percent for February 1, 1995.

The average random uncertainty component for the daily volume can be obtained from the following expression:

$$CV_{Vr} = \pm \frac{\Delta t}{m_v}\left(\sum_{k=1}^{n} Q_k^2 CV_{rk}^2\right)^{\frac{1}{2}} \qquad \textit{Equation (11)}$$

Where:

CV_{rk}	=	Random error in individual flow measurement k
CV_{Vr}	=	Relative uncertainty of the volume measurement

Using Equation (11), the relative random uncertainty of the daily volume, CV_{vr}, for February 1, 1995 , is ± 0.31 percent.

The overall uncertainty of the daily volume can then be found by combining the systematic and random uncertainty components in the following manner:

$$CV_V = CV_{bV_{\substack{direction\\known}}} + \frac{\Delta t}{m_v}\left(\sum_{k=1}^{n} Q_k^2 CV_{b_{k_{\substack{direction\\unknown}}}}^2 + \left(\sum_{k=1}^{n} Q_k CV_{b_{k_{\substack{unknown\\but\ in\ same\\direction}}}}\right)^2 + \sum_{k=1}^{n} Q_k^2 CV_{r_k}^2\right)^{\frac{1}{2}} \qquad \textit{Equation (12)}$$

For the date in question, the overall uncertainty of the daily volume, CV_V, was found to be -0.50 ± 0.43 percent, or -0.31 ± 0.26 MG (-0.50 ± 0.43 percent times 61.2 MG). The 95-percent confidence interval on the daily volume, CI_v, would then be -0.50 ± 0.89 percent (-0.50 ±[0.43 times 2.069]). Note that the 95 percent confidence interval for the daily volume (-0.50 ± 0.89 percent) is much narrower than the 95 percent confidence interval for the hourly flow measurement (-0.50 ± 3.33 percent). This is because the random errors and systematic errors with unknown direction associated with an hourly flow measurement are statistically canceled when they are summed over a day's time. The average random, systematic, and overall uncertainty for each day in each two-week study period were found using the above method. A summary of the daily volume uncertainties for the February 1995 study period appears in Table 8.

Table 8
Estimated Uncertainties for Daily Volumes in February 1995 Study Period

Date	CV_{Vb} (%)	CV_{Vr} (%)	CV_V (%)	CI_V (%)
February 1	-0.50 ± 0.30	± 0.31	-0.50 ± 0.43	-0.50 ± 0.89
February 2	-0.50 ± 0.30	± 0.31	-0.50 ± 0.43	-0.50 ±0 .89
February 3	-0.50 ± 0.30	± 0.31	-0.50 ± 0.43	-0.50 ± 0.89
February 4	-0.50 ± 0.29	± 0.31	-0.50 ± 0.43	-0.50 ± 0.88
February 5	-0.50 ± 0.29	± 0.31	-0.50 ± 0.43	-0.50 ± 0.88
February 6	-0.50 ± 0.30	± 0.31	-0.50 ± 0.43	-0.50 ± 0.89
February 7	-0.50 ± 0.29	± 0.31	-0.50 ± 0.43	-0.50 ± 0.89
February 8	-0.50 ± 0.30	± 0.31	-0.50 ± 0.43	-0.50 ± 0.89
February 9	-0.50 ± 0.29	± 0.31	-0.50 ± 0.43	-0.50 ± 0.88
February 10	-0.50 ± 0.30	± 0.31	-0.50 ± 0.43	-0.50 ± 0.89
February 11	-0.50 ± 0.29	± 0.31	-0.50 ± 0.42	-0.50 ± 0.88
February 12	-0.50 ± 0.29	± 0.31	-0.50 ± 0.42	-0.50 ± 0.88
February 13	-0.50 ± 0.29	± 0.31	-0.50 ± 0.43	-0.50 ± 0.89
February 14	-0.50 ± 0.30	± 0.31	-0.50 ± 0.43	-0.50 ± 0.89
February 15	-0.50 ± 0.30	± 0.31	-0.50 ± 0.43	-0.50 ± 0.90

C. Uncertainty of Annual Volume Measurements

Using the estimated uncertainty in daily volume measurements, the uncertainty in the annual volume pumped through the station can be estimated. As mentioned earlier, the study period consisted of two-week periods in February, May, July, and September of 1995 and 1997. In total, there were 117 days in the study period. Over this time period, the average systematic uncertainty for a daily volume measurement, CV_b, was determined to be -0.50 ± 0.31 percent (± 0.13 percent from unknown biases and ± 0.28 percent from unknown biases known to be in the same direction for all meters) and the average random uncertainty for a daily volume measurement, CV_r, was estimated to be ± 0.33 percent. The average uncertainty in daily volume would then be -0.50 ± 0.46 percent and the average 95-percent confidence interval for the daily volume would be -0.50 ± 0.95 percent. The uncertainty in the annual volume pumped through the Thomas Jefferson Station, CV_V can be determined as follows:

$$CV_V = CV_{b_{\substack{direction \\ known}}} \pm \left(\frac{CV^2_{b_{\substack{direction \\ unknown}}}}{n} + CV^2_{b_{\substack{unknown \\ but\ in\ same \\ direction}}} + \frac{CV_r^2}{n} \right)^{\frac{1}{2}}$$

$$= -0.50 \pm \left(\frac{0.13^2}{365} + 0.28^2 + \frac{0.33^2}{365} \right)^{\frac{1}{2}} = -0.50 \pm 0.28\%$$

Equation (13)

The 95 percent confidence interval of the annual volume, CI_v, would then simply be -0.50 ± 0.78 percent (-0.50 ±[0.28 times 1.960]). The 95-percent confidence interval for the annual volume (-0.50 ± 0.55 percent) is slightly less than the 95-percent confidence interval for the daily volume (-0.50 ± 0.95 percent). Most of the random error and unknown bias error associated with the daily volume measurement is statistically canceled when determining the uncertainty of the annual volume.

4. Quality Assurance

If the water accounting system is moved to the lakefront, there is concern that if one of the direct diverter's flow measurement systems goes down, that there would be no way to measure the withdrawals from the lake. Thus, it is desirable that the direct diverters have a back up measurement system and, if possible, some other independent check on the measurements to assure that the measurements are reasonable and accurate.

There are many backup systems at the Thomas Jefferson Pumping Station. If a problem is detected in one of the venturi-type meters, then that venturi-type meter and its associated pump can be shut down and a different pump and venturi-type meter started up. This can also be done if one of the pressure transmitters malfunctions. Also, all of the venturi-type meters in the Thomas Jefferson Pumping Station are equipped with manometers that can be used as a backup to the electronic pressure transmitters.

The SCADA system used to totalize the flow consists of several elements. A schematic of the SCADA system showing the flow and storage of data is provided in Appendix B. The signal from each pressure transmitter is sent to a computer (CP2), located at the plant, where the flow data is displayed, processed and temporally stored. This computer is only capable of storing 3 days worth of data. Therefore, the control center computer system (CP3) located at the Jardine water treatment plant reads the data from the CP2 and is responsible for storing and maintaining the flow records. Note that if CP2 were to fail, the data would not be communicated to CP3. The CP3 central control computer system consists of two computers with automatic failover such that if one computer fails, the other one takes over automatically. Both of these computers store data from the pumping station so none of the data should be lost in the event that either computer fails. The data stored on CP3 is also backed up on tape.

The data is transferred from the CP2 computer at the plant to the CP3 computer at Jardine over a dedicated communication line (i.e. a telephone line). This communication line does not have a backup. However, since the CP2 at the station can store up to three days of data, no data will be lost if the line is repaired within 3 days.

If the SCADA system were to fail, there are no backup recorders at the station. Readings could, however, be obtained manually from the venturi Nos. 1 through 3 manometers. This data would then be manually inputted in the SCADA system once the problems with the SCADA system were corrected. Venturi No. 4 does not have manometers, thus the data would be lost.

There are no chart recorders at the Thomas Jefferson Pumping Station. Thus, the Thomas Jefferson station does not have this additional level of backup that some of the other city of Chicago stations do. Also, it is desirable to have an independent check on the flow measurement system employed by the Thomas Jefferson station. Because the Thomas Jefferson station does not have any recorders other than the SCADA system, there is no easily identifiable independent check on the flow measurement system.

5. Summary of Inadequacies in the Current Metering Systems

For the most part, the current metering system provided a reasonable level of accuracy and has acceptable quality assurance. The following portion of the metering system appears to be deficient.

- The actual venturi meters are not calibrated. Rather, the City assumes that the manufacturer's rating curves are correct. Calibration of the venturis would confirm or deny this assumption.

- No backup data recorders exists. Therefore, should the SCADA system fail, flow data at the Thomas Jefferson Station could be lost. Further, without two data sources, any additional uncertainty due to the sampling accuracy cannot be determined.

- The overall accuracy in estimating the water supply pumpage is dependent upon many measurement and analysis functions. The documented technical review and much previous work were focused on the accuracy of the pumpage measurements in hardware (i.e., meters, calibrator, pressure transmitter, etc.) and software (SCADA, etc.). This analyses does not take into account procedural errors such as inconsistent data in water supply pumpage as a result of the reporting mechanism.

6. Recommendations for Long-Term QA/QC and Improvements to Metering

Recommendations for long-term QA/QC and improvements are as follows:

- Calibration of the venturi meters to determine if the manufacturer's rating curves are valid.
- Occasional inspection and measurement, if physically possible, of the inlet and throat of the venturi meters to determine any possible presence and effects of corrosion and tuberculation on the meter's accuracy.
- Installation of a backup recording devices.
- Routine auditing of various water withdrawal reports, as part of the long-term QA/QC, as a means of accounting for procedural errors.

7. Conclusions

Some of the important conclusions are summarized below:

- For operational purposes, the City can determine the hourly flow measurement reading to within -0.50 ± 3.33 percent at the Thomas Jefferson Station. This value takes into account the random and systematic uncertainty associated with the venturi meters, pressure transmitters, calibration equipment, and recording system.

- On an annual basis, the total volume pumped through the station can be determined to with -0.50 ± 0.55 percent. The 95-confidence interval for the annual volume is narrower than the 95-percent confidence interval for the hourly flow measurements made at the Thomas Jefferson Station because the random and unknown bias errors associated with the measurement are statistically canceled when the measurements are summed over one year's time.

- With the exception of the SCADA system, the entire metering system has redundancy or backup for quality assurance. There is no backup data recorder at this time.

- There is no independent check of the flow measurement system that can be used as an indicator when there is a problem within the system.

References

American Society of Mechanical Engineers. Fluid meters: their theory and applications. ASME, New York, 5th ed., 203 p; 1959.

Ametek Power Instruments, "Rochester DPG-700 Precision Digital Pressure Gauge," http://www.rochester.com/Products/RIS/dgp-700.htm.

Analog Input Module PPX:505-6108A Electrical Specification [for the SCADA system]. Date not provided.

Gould, "Technical Specification for the Gould Transmitters." No date provided.

International Organization for Standardization, *Measurements of Fluid Flows by Means of Pressure Differential Devices*, ISO, Switzerland, 1991.

Mead & Hunt, Inc., *Technical Review of Lake Michigan Withdrawals - Southwest Pumping Station*, July 2002.

Mead & Hunt, Inc., *Technical Review of Lake Michigan Water Withdrawals by the City of Evanston–Draft,* July 2002.

Meriam Instrument, *General Installation, Operation and Maintenance Instructions for Meriam Manometers*, April 1992.

Miller, Richard W. Flow measurement engineering handbook. McGraw-Hill, New York, NY. Fifteen chapters; 1996.

Miner, I.O. The Dall flow tube. Transactions of the American Society of Mechanical Engineers, Vol. 78, No. 3, pp. 475-479; 1956.

Spitzer, David W., *Industrial Flow Measurement.* Instrument Society of America, North Carolina, 1990.

Written correspondence between Conrad Bazylewski of the City of Chicago and F.L. Sommer of F.B. Leopold Company regarding the "Printed Accuracy Data on the Venturi Tubes and Simplex Flow Meters," March 16, 1977.

Final Report

Technical Review of Lake Michigan Withdrawals Western Avenue Pumping Station

City of Chicago

Prepared for:

U.S. Army Corps of Engineers -- Chicago District
Chicago, Illinois

Prepared by:

MEAD & HUNT

August 2003

Table of Contents

Page

Executive Summary . . . . . E-i

1. General Description 1
   A. Summary of Operation 1
   B. Flow Measurement 1
   C. Flow Totalization 2
   D. Calibration 2

2. Uncertainty in Metering and Measurement Components 4
   A. Venturi-Type Meters 4
   B. Pressure Taps 4
   C. Meter Installation 4
   D. Sampling 5
   E. Pressure Differential Measurement 7
   F. Dry Calibration of Pressure Transmitters 7
   G. SCADA System 7

3. Sample Uncertainty Calculation for Effluent Meters 8
   A. Uncertainty of Hourly Flow Measurements 8
      (1) Systematic (Bias) Error 8
      (2) Random Error 14
      (3) Combining Systematic and Random Errors 15
   B. Uncertainty of Daily Volume Measurements 17
   C. Uncertainty of Annual Volume Measurements 19

4. Quality Assurance 21

5. Summary of Inadequacies in the Current Metering Systems 22

6. Recommendations for Long-Term QA/QC and Improvements to Metering 23

7. Conclusions 24

References 25

List of Tables

Table		Page
1	Specifications of Flow Measurement Devices Used at the Western Station	1
2	Upstream Disturbances and Approximate Approach Lengths for the Various Venturi Meters at the Western Station	5
3	Results of the Randomized Complete Block Design Comparison Between the Flow Data From the Chart Recorders and the 24 Hourly Readings	6
4	Summary of Flow Characteristics for the First Hourly Reading on September 1, 1998	9
5	Uncertainty From the Pressure Transmitters and Calibration Equipment for the First Hourly Reading on September 1, 1998, for Venturi Nos. 1, 3, and 4	10
6	Absolute Bias Estimates for the First Hourly Readings Taken on September 1, 1998	12
7	Systematic, Random, and Overall Uncertainty Estimates for Hourly Flow Measurements Made on September 1, 1998	16
8	Estimated Uncertainties for Daily Volumes in September 1998 Study Period	19

Appendix

A Schematic of the Western Avenue Pumping Station

B Schematic of the SCADA System

Executive Summary

Currently, diversion of water from Lake Michigan for the state of Illinois is measured at the Chicago Sanitary and Ship Canal at Romeoville. The Great Lakes Mediation Memorandum of Understanding established a lakefront diversion accounting system and specified a 3-year transition period to assess the technical acceptability of moving the diversion measurement system to the lakefront. A lakefront diversion accounting system requires metering of all domestic water withdrawals from Lake Michigan and the direct diversions into the Chicago Sanitary and Ship Canal system at the Chicago River, the Calumet River, and the North Shore Channel at Wilmette. During the 3-year transition period, the U.S. Army Corps of Engineers (USACE) has been tasked to initiate a technical review of the accuracy of the reported domestic withdrawals from Lake Michigan.

The USACE retained Mead & Hunt, Inc., to evaluate the accuracy of domestic withdrawals from Lake Michigan. A total of 12 pumping stations in the city of Chicago (City) and six suburban pumping stations will be evaluated. These evaluations include revisions to the investigations conducted on the City's Mayfair and Thomas Jefferson Stations and the city of Evanston's Station by the Illinois District of the U.S. Geological Survey. This report presents a summary of the flow measurement techniques at the Western Station as employed by the City, as well as estimates of the uncertainty of daily and annual volume measurements. Presently, the Western Station consists of four electrically operated pumps and four venturi-type meters.

To obtain an estimate of the uncertainty of an individual flow measurement, we examined the manufacturer's accuracy specifications for both the primary flow measurement devices (i.e., the venturi-type meters) and secondary measurement devices (i.e., the pressure transducers). The Western Station's calibration technique, sampling technique, and device installation were also examined. All of the sources of uncertainty identified from this analysis were then classified as either random or systematic in nature. Using this information and the data logs provided by the City, we obtained an estimate of the uncertainty of an individual flow measurement. From this information, an estimate of the uncertainty of the daily and annual volume withdrawn from the lake can be obtained using standard statistical techniques.

Some of the important conclusions are summarized below:

- For operational purposes, the City can determine the hourly flow measurement reading to within -0.5 ± 6.84 percent at the Western Station. This value takes into account the random and systematic uncertainty associated with the venturi meters, pressure transmitters, calibration equipment, and recording system.

- On an annual basis, the total volume pumped through the station can be determined to within -0.50 ± 2.57 percent. The 95-percent confidence interval for the annual volume is narrower than the 95-percent confidence interval for the hourly flow measurements made at the Western Station

because the random and unknown bias errors associated with the measurement are statistically cancelled when the measurements are summed over a year's time.

- There is some form of backup system for all the measurements made at the Western Station. No loss of flow data is likely under most conditions.

- The chart recorders at the Western Station can be used as a check on the flow measurement system. The difference between the chart recorders and the daily log sheets should be less than 2 percent. A difference greater than 2 percent indicates there may be a problem within the flow measurement system.

Technical Review of
Lake Michigan Withdrawals
Western Avenue Pumping Station
City of Chicago

1. General Description

A. Summary of Operation

The Western Avenue Pumping Station (Western Station) is a steam-operated plant consisting of four pumps and four venturi-type meters. Each pump's flow is dedicated to a specific venturi-type meter. The pressure differentials on the meters are measured using Johnson Yokogawa pressure transmitters. The output signals from the pressure transmitters are sent to both the Supervisory Control and Data Acquisition (SCADA) system and to the Eurotherm Chessell chart recorders for totalization. The SCADA system is the primary recording device and samples the pressure transmitter signals every minute. These 1-minute readings are then used to determine the average daily volume pumped through any given venturi meter. The chart recorders are used as a back-up to the SCADA system. The recorders provide a 24-hour record of pumpage for each venturi-type meter and totalization figures. A schematic of the Western Station is provided in Appendix A.

B. Flow Measurement

The Western Station uses four venturi-type meters to measure the flow pumped through the station. All four meters were installed in 1927. These four meters have an identical design and their specifications are shown in Table 1.

Table 1
Specifications of Flow Measurement Device Used at the Western Station

Manufacturer	Model No.	Approach Pipe Diameter (inches)	Throat Diameter (inches)	β-Ratio	Coefficient of Discharge	Meter Capacity (MGD)*
Simplex	VT	48	30	0.6250	0.9890	122.1

** Million gallons per day*

C. Flow Totalization

At the Western Station, two different methods are used for flow totalization. The SCADA system is the primary flow totalization system. First, the output from the pressure transmitters is sent to the SCADA system. The SCADA system samples the output every minute. The pressure transmitters' signal is divided by an integrator constant to convert it to a volume measurement. The sum of the 1,440, 1-minute readings is then used to determine the volume pumped through the system on a daily basis.

The pressure transmitters' signal is also sent to the chart recorders. The chart recorders are used as a backup system to the SCADA system, and provide a 24-hour graphical record of the pumpage for each venturi-type meter. Instantaneous estimates of the flow rate and total volume are also provided by the chart recorders.

D. Calibration

An effective calibration procedure should calibrate both the primary flow meter and its secondary measurement device. First, the secondary measurement device, such as a pressure transmitter, should be calibrated to ensure it is reading correctly. Then, the flow meter itself should be calibrated to ensure it is functioning properly. The City does not perform any wet calibrations on the primary flow meters or their secondary measurement devices. Thus, all of the City's calibrations can be considered inferential in nature. The secondary measurement devices (i.e., the pressure transmitters, totalizers, etc.) are dry-calibrated once a year. If the City notices a problem or discrepancy, the instruments are checked; repaired, if necessary; and calibrated. If these tasks cannot be completed immediately, the unit is taken out-of-service until it can be repaired and calibrated. When a pressure transmitter or totalizer is calibrated, a full dry-calibration is performed using the Rochester DPG-700 pressure gauge. This pressure gauge provides a "calibrated" differential pressure that can be used to determine if the pressure transmitter or totalizer is reading properly. For the primary flow measurement devices, the City assumes the manufacturers' rating tables are correct.

After all the individual instruments have been dry-calibrated, the City performs an end-to-end calibration of the pumping station. When an end-to-end calibration is performed, the venturi-type meters are connected to manometers in order to obtain the pressure differentials. After an hour has passed, the volume measured by the manometer readings is compared to the volume measured by the totalizer. The City wants the difference between these two readings to be less than 2 percent for both the totalizer and instantaneous readings. This type of calibration is done to ensure that all the secondary measurement devices are working together properly.

During the calibration, the City takes readings from the Meriam manometers and from the calibrated flow signal over a period of time, typically at least 1 hour. The averages of both sets of data are compared and if a significant difference in readings is detected, the calibrators are sent out for re-calibration and re-certification. The last re-calibration was April 2000. According to the manometer's specifications, the "NIST recognizes the U-type manometer as a primary standard due to its inherent accuracy and simplicity of operation." The manometers do not require calibration; therefore, comparing the values from the calibrated flow signal to the manometer's readings is a reasonable method of checking whether the calibrators should be re-certified.

2. Uncertainty in Metering and Measurement Components

A. Venturi-Type Meters

According to manufacturer's specifications, the four Simplex venturi meters have an uncertainty of ± 0.50 percent for the top 95 percent of the meter's flow range. This uncertainty is bias in nature with an unknown direction. Since the Simplex meters have been in use for 70 years, a possibility of pitting, tuberculation, and corrosion in the critical areas exists. In March 1977 correspondence between the Simplex manufacturer and the City, the manufacturer stated that given the age of the meters, "it is entirely possible that there may be tuberculation in the venturis." They further stated that without an examination of the meters, it is impossible to predict whether a meter's condition may affect its accuracy.

The City has not inspected any of the meters at the Western Station. However, the meters at the Western Station are similar to the meter inspected by the City at the Southwest Station in that the throats of the meters are lined with bronze. Bronze is known for its ability to resist corrosion and formation of tubercles. Therefore, it is reasonable to assume that any significant corrosion or tuberculation would occur on the inlet piping only. This was the case when the meter was inspected at the Southwest Station. Since the water pumped through the Western Station and the Southwest Station have the same water chemistry and are treated in the same manner, it is assumed that if the venturis at the Western Station were inspected, the results would be similar to the results of the meter inspection at the Southwest Station. Therefore, based on the determinations made in the *Technical Review of Lake Michigan Withdrawals –Southwest Pumping Station*, any error due to corrosion and tuberculation is considered insignificant at the Western Station.

B. Pressure Taps

The pressure taps that are used to measure the pressure differential should be square with no roughness, burrs, or wire edges (Miller, 1996). If the pressure taps that are used do not meet these requirements, then a bias error would be introduced. It was not practical to inspect the pressure taps of these meters. The flow measurement devices were all constructed under a controlled-manufacturing environment with very little opportunity for a pressure tap to be constructed poorly. Thus, we assumed that the manufacturer constructed the pressure taps correctly and that no additional error would be introduced due to the pressure taps.

C. Meter Installation

An appropriate minimum length of straight, circular pipe is required upstream of the flow meter to guarantee that the flow is fully established, the velocity profile entering the meter is not distorted, and that the meter will perform properly. The length of this approach section depends on number and types of bends and fittings located upstream of the meter.

At the Western Station, all four meters have the same upstream installation. At 6.6 feet upstream of each venturi are two bends in different planes, and 14.2 feet upstream of the these bends is a valve. Table 2 indicates the minimum pipe lengths, as reported in ISO 5167-1:1991, required for both of these lengths of pipe given their upstream bends or fittings.

The ISO 5167-1:1991 reference materials only give minimum length requirements for zero and 0.5 percent error. In this application, the actual reach length to the first upstream fitting (two bends in different planes) is significantly less than the ISO 5167-1:1991 requirements for 0.5 percent error and thus the error might actually exceed the 0.5 percent error, however to what degree is unknown. Therefore, although the error may be greater than 0.5 percent, this value will be used in the analysis. The two bends in different planes introduce a swirling affect of the flow profile. As reported by Miller, the introduction of swirl upstream of a venturi-type meter causes flow to be under reported. Therefore, the additional error will be -0.5 percent. This value is systematic in nature. The approach length of the second upstream fitting was adequate for both 0 and 0.5 percent error so no additional error was necessary due to this portion of the installation.

Table 2
Upstream Disturbances and Approximate Approach Lengths for the Various Venturi Meters at the Western Station

Pipe Reach	Upstream Fitting	Approach Length (feet)	Required Pipe Length for Zero Error (feet)	Required Pipe Length for 0.5 Percent Error (feet)
First upstream length	Two bends in different planes	6.6	160	94
Second upstream length	Valve	14.2	11*	7*

** These values are based on a beta ratio of 0.7 as recommended by ISO 5167.*

Inadequate straight piping downstream of the meter can also affect the meter's accuracy. ISO 5167-1:1991 reference materials indicate that as long as the downstream length of straight piping exceeds four times the meter's throat diameter, no additional error is expected. All four of the Western Station's meters have a throat diameter of 2.5 feet (30 inches) and, therefore, 10 feet of straight downstream piping is required. All four meters have 20.4 feet of straight downstream piping, which is adequate to ensure no additional error due to downstream piping geometry.

D. Sampling

Additional uncertainty can also be introduced due to how the flow measurement data is recorded. If, for example, a quantity varies sinusoidally, but that quantity is only measured at the times when the quantity is at a peak, then the average measurements will be higher than the true average. This would introduce a bias into the system. On the other hand, if a quantity is measured or sampled frequently, then there

will be very little error introduced due to the sampling. The flow rates at the Western Station are sampled every minute, and these 1-minute sample readings are used to determine the average daily volume pumped through the station. There are also chart recorders that estimate the volume pumped continuously. If the 1-minute samplings and the continuous chart recordings give the same estimate for the total volume, then it can be assumed that there is no additional uncertainty introduced due to sampling. The 1-minute sampling data from the SCADA system were not readily available. Thus, the daily logs used in the Western Station were used instead of the SCADA data. The daily logs report an hourly instantaneous flow reading for each venturi-type meter in operation, as well as the daily volume pumped as reported by the chart recorders. If the sum of the 24 individual hourly measurements on the daily log and the volume measured by the chart recorders are statistically the same, then it can be assumed that there would be no additional uncertainty introduced due to sampling.

To determine if the chart recorders and the daily logs were reporting the same volume, a randomized complete block design was performed on some sample data with the measurement method acting as the treatments and the daily volume measurements acting as the blocks. The statistical tests were performed at the 95-percent confidence level. A summary of the results of the randomized complete block tests appears in Table 3. These results indicate that, at the 95-percent confidence level, there is no statistical difference between the chart recorder and the sum of the 24 individual measurements of the daily log sheets. These statistical tests were performed with the 24 hourly readings from the daily log sheet and not the 1,440, 1-minute readings from the SCADA system. If all of the venturi-type meters and the chart recorders report the same value statistically using only 24 hourly readings, then the venturi-type meters and chart recorders should report the same value statistically using 1,440 1-minute readings and thus there was no uncertainty introduced due to sampling

Table 3
Results of the Randomized Complete Block Design Comparison Between the Flow Data From the Chart Recorders and the 24 Hourly Readings

Dates	Venturi No.	Statistical Difference
September 1–14, 1998	1	No
	4	No
February 1–14, 1999	2	No
	4	No
May 1–14, 1999	2	No
	3	No

E. Pressure Differential Measurement

The pressure differentials of all four venturi-type meters are measured using Johnson Yokogawa pressure transmitters. Based on the manufacturer's performance specifications, these pressure transmitters have an accuracy of ± 0.2 percent of the calibrated span. This accuracy includes effects caused by hysteresis, linearity, and repeatability. The Johnson Yokogawa transmitters have a dead band of ± 0.05 percent calibrated span and a temperature effect of ± 0.2 percent of calibrated span per 90 degrees F. The lake temperature varies from about 32 to 70 degrees F. This is approximately a 40-degree F temperature range. Stability was not provided in the manufacturer specifications and thus assumed to not be a significant source of error. All four of the Johnson Yokogawa transmitters have a calibrated span of 239.52 inches of water. It is assumed that the specifications provided by the manufacturer are correct. The accuracy and temperature effect are considered to be systematic in nature with the direction of this bias being unknown. The dead band is a random error.

F. Dry Calibration of Pressure Transmitters

The secondary measurements devices (i.e., pressure transmitters) are calibrated once a year using a Rochester DPG-700 module. Because the pressure transmitter is adjusted to the Rochester DPG-700 reading, all of the uncertainty components of the Rochester DPG-700 module will become a bias reported by the Rosemount 1151 pressure transducer. Since both pressure and current readings are taken from the Rochester DPG-700 module during calibration, two independent accuracy values apply. For the pressure reading, the accuracy is reported to be ± 0.05 percent of full scale plus one digit of display. Based on manufacturer's specifications, the pressure display is shown to 0.002 pounds per square-inch gauge (PSIG), which is equal to 0.055 inches of water. The range of the Rochester DPG-700 module is 0 to 30 pounds per square inch ([psi] or 830.80 inches of water). The current reading's uncertainty is reported as ± 0.05 percent of full scale plus one digit of display. The upper range limit for the current is 50 mA. The current resolution is 0.005 mA. The direction of these biases, although unknown, will be in the same direction for all four meters in the Western Station.

G. SCADA System

In order for the SCADA system to determine the volume pumped through the Western Station, the analog signal from the pressure transmitter was converted to a digital signal using an analog input module. The manufacturer's specifications state that the analog-to-digital conversion is accurate to within ± 1.25 percent of full scale over operating range, and to within ± 0.7 percent of full scale at 25 degrees C. Since the water temperature varies from 32 to 70 degrees F, the uncertainty value of ± 1.25 percent of full scale over operating range will be used. In this case, the full scale was assumed to be the full scale of the venturi-type meter to which the pressure transmitter was connected. The error due to the analog to digital conversion is random in nature.

3. Sample Uncertainty Calculation for Effluent Meters

To demonstrate how the uncertainty of the measured volume pumped through the Western Station was estimated, a series of sample calculations follows. The method used to estimate the uncertainty is similar to that described in the *Technical Review of Lake Michigan Water Withdrawals by the City of Evanston*. Please refer to this document for background on the statistical handling of measurement uncertainty. The City provided the hourly logs of three 2-week periods. These time periods were the first 14 days in September 1998, and February and May 1999. It was assumed that the Western Station's pumpages over these time periods were representative of the typical pumpages. It was also assumed that Western Station's pumpages were constant over each hour reported on the daily log sheets. The uncertainty of the hourly and daily readings can be obtained using these assumptions. The uncertainties can be reported as the standard deviation of the measurements (expressed by the variable *s*) or in relative terms (expressed by the variable *CV*, which is the standard deviation of the measurements divided by the mean of the measurements).

A. Uncertainty of Hourly Flow Measurements

(1) Systematic (Bias) Error

The majority of the error components are systematic in nature. These systematic errors include error from the venturi, inadequate approach length, the pressure transmitters (accuracy and temperature effect), and the calibration equipment. To determine the uncertainty of the hourly flow measurements, all uncertainties need to be in terms of percent accuracy of actual rate. The errors associated with the venturi and the inadequate approach lengths are already expressed in these terms. However, the accuracy associated with the pressure transmitters and calibration equipment are in terms of percent accuracy per calibrated span, upper range limit (URL) or full scale (FS).

The standard equation for the flow through a venturi-type meter is:

$$Q = \frac{C_d A_t}{\sqrt{1-\beta^4}} \sqrt{2g\Delta h} \qquad \textit{Equation (1)}$$

where Q is the flow rate, C_d is the discharge coefficient, A_t is the area of the throat section, β is the ratio of the throat diameter to the approach section diameter (also referred to as the beta ratio), g is the acceleration due to gravity, and Δh is the pressure differential across the meter. Based on manufacturer information, the C_d value for the venturi meters is 0.9890.

At the Western Station, each venturi meter is dedicated to a single pump. For illustration of the uncertainty calculations, we will be examining the pumping characteristics for September 1, 1998. On this day, pump Nos. 1, 3, and 4 were routed through their respective venturi meters.

The throat area, A_t, for all four of the venturi-meters is:

$$A_t = \frac{\Pi(30.0)^2}{4} = 706.9in^2 = 4.909ft^2 \qquad \textit{Equation (2)}$$

For the first hour on September 1, 1998, 27, 30, and 35 MGD were flowing through venturi Nos. 1, 3, and 4, respectively. The pressure differential for venturi No. 1 is calculated below using Equation (1), and the β-ratio of 0.6250 from Table 1.

$$\Delta h = \left[\frac{Q\sqrt{1-\beta^4}}{C_d A_t \sqrt{2g}}\right]^2 = 12\left[\frac{1.547(27MGD)\sqrt{1-(0.6250)^4}}{(0.9890)(4.909ft^2)\sqrt{2(32.16ft/s^2)}}\right]^2 = 11.70in. \qquad \textit{Equation (3)}$$

The values of 12 and 1.547 that appear in *Equation (3)* are unit conversion factors to convert feet to inches and MGD to cubic feet per second (cfs), respectively. A summary of flow characteristics for the first hourly reading of the three venturi-type meters on September 1 appears in Table 4.

Table 4
Summary of Flow Characteristics for the First Hourly Reading on September 1, 1998

Venturi No.	Throat Area (sq. ft.)	Flow Rate (MGD)	Computed Pressure Differential (in. water)
1	4.909	27	11.70
3	4.909	30	14.45
4	4.909	35	19.67

The pressure differentials of all the venturi-type meters are measured using Johnson Yokogawa pressure transmitters. Based on the manufacturer's performance specifications, these pressure transmitters have an accuracy of ± 0.2 percent of the calibrated span, a stability of ± 0.05 percent of the calibrated span, and temperature effect of ± 0.2 percent of the calibrated span per 90 degrees C. All four venturis have a calibrated span of 239.52 inches of water. Thus, the uncertainty in the pressure differential measurement due to accuracy would be ± 0.479 inches of water (i.e., ± 0.002 times 239.52) for all the venturi meters. The uncertainty in the flow rate due to the accuracy of the pressure transmitter for venturi meter No. 1 would then be:

$$CV_{Qa} = \frac{Xs_p}{\Delta h} = \frac{(0.5)(\pm 0.479in)}{11.70in} = \pm 2.047\% \qquad \textit{Equation (4)}$$

Where: CV_{Qa} = Uncertainty in the flow rate due to the accuracy of the pressure transmitter

s_p = Uncertainty in the pressure transmitter (due to transmitter accuracy in this case)

X = Sensitivity coefficient equal to 0.5 for the pressure transducer as the flow is directly proportional to the square root of the pressure differential in Equation (1)

Δh = Pressure differential

See *Technical Review of Lake Michigan Water Withdrawals by the City of Evanston* for additional information on the sensitivity coefficient, *X*. The uncertainty in the flow rate due to the transmitter's accuracy, stability, and temperature effect for meter Nos. 1, 3, and 4 are shown in Table 5.

Table 5
Uncertainty From the Pressure Transmitters and Calibration Equipment for the First Hourly Reading on September 1, 1998, for Venturi Nos. 1, 3, and 4

Venturi No.	Instrument	Uncertainty Source	CV for Δh or ΔmA	URL or Calibrated Span	Uncertainty for Δh or ΔmA	CV for Flow (%)
1	Johnson Yokogawa	Pressure transmitter	0.2% calibrated span	239.52 in. water	0.479 in. water	± 2.047
1	Johnson Yokogawa	Pressure transmitter	0.2% calibrated span/90°F	239.52 in. water	0.213 in. water	± 0.910
1	DPG-700	Calibrator	0.05% FS + 1 digit*	830.8 in. water	0.470 in. water	± 2.009
1	DPG-700	Calibrator	0.05% FS + 1 digit**	50 mA	0.030 mA	± 0.400
3	Johnson Yokogawa	Pressure transmitter	0.2% calibrated span	239.52 in. water	0.479 in. water	± 1.658
3	Johnson Yokogawa	Pressure transmitter	0.2% calibrated span/90°F	239.52 in. water	0.213 in. water	± 0.737
3	DPG-700	Calibrator	0.05% FS + 1 digit*	830.8 in. water	0.470 in. water	± 1.628
3	DPG-700	Calibrator	0.05% FS + 1 digit**	50 mA	0.030 mA	± 0.378
4	Johnson Yokogawa	Pressure transmitter	0.2% calibrated span	239.52 in. water	0.479 in. water	± 1.218

Table 5
Uncertainty From the Pressure Transmitters and Calibration Equipment for the First Hourly Reading on September 1, 1998, for Venturi Nos. 1, 3, and 4

Venturi No.	Instrument	Uncertainty Source	CV for Δh or ΔmA	URL or Calibrated Span	Uncertainty for Δh or ΔmA	CV for Flow (%)
4	Johnson Yokogawa	Pressure Transmitter	0.2% calibrated span/90°F	239.52 in. water	0.213 in. water	± 0.541
4	DPG-700	Calibrator	0.05% FS + 1 digit*	830.8 in. water	0.470 in. water	± 1.196
4	DPG-700	Calibrator	0.05% FS + 1 digit**	50 mA	0.030 mA	± 0.349

* *One digit is equal to 0.055 in. water*
** *One digit is equal to 0.005 mA*

The pressure transmitters are calibrated using a Rochester DPG-700 calibrator. Since both pressure and current readings are taken from the calibrator, two independent accuracy values apply. For the pressure reading, the accuracy is reported to be ± 0.05 percent of full scale, plus one digit of display. Based on manufacturer's specification, the pressure display is shown to 0.002 PSIG, which is equal to 0.055 inches of water. The range of the Rochester DPG-700 module is 0 to 30 psi (or 830.80 inches of water). Thus, the uncertainty in the pressure component of the calibrator would be ± 0.470 inches of water (i.e., ± 0.0005 times 830.80, plus 0.055) for all venturi meters. The uncertainty in the flow rate due to pressure component of the calibrator for venturi meter No. 1 would then be:

$$CV_{Qa} = \frac{Xs_p}{\Delta h} = \frac{(0.5)(\pm 0.470in)}{11.70in} = \pm 2.009\% \qquad \textit{Equation (5)}$$

The current reading's uncertainty is reported as ± 0.05 percent of full scale, plus one digit of display. The upper range limit for the current is 50 mA. The current resolution is 0.005 mA. Thus, the uncertainty in the current component of the calibrator would be ± 0.030 mA (i.e., ± 0.0005 times 50, plus 0.005) for all venturi meters. The uncertainty in the flow rate due to the current component of the calibrator for venturi meter No. 1 would then be:

$$CV_{Qa} = \frac{Xs_i}{\Delta i} = \frac{(1.0)(\pm 0.030mA)}{7.5mA} = \pm 0.400\% \qquad \textit{Equation (6)}$$

where s_i is an uncertainty due to the current reading for the calibrator pressure differential and Δi is the current differential. The current reading is known to be linear to the flow rate with 4 mA corresponding to zero flow, and 20 mA corresponding to flow meter capacity, which is 122.1 MGD

for all four meters. Using this relationship, for the first hour on September 1, the corresponding currents would be 7.5, 7.9, and 8.6 mA for meter Nos. 1, 3, and 4, respectively. Note that for this calculation, the sensitivity coefficient, *X*, is 1.0 since the flow rate is directly proportional to the current (i.e., a linear relationship). This process was repeated for DPG-700 pressure gauge accuracy for meter Nos. 3 and 4. A summary of these estimates appears in Table 5.

In this study, the bias uncertainty estimates were broken down into three categories:

- Bias uncertainty with a known bias direction.
- Bias uncertainty with an unknown bias, but known to be in the same direction for each meter.
- Bias uncertainty with an unknown bias direction.

Explanation of this breakdown was detailed in the *Technical Review of Lake Michigan Water Withdrawals by the City of Evanston*. Table 6 lists the type of bias uncertainty for each of the bias estimates for the first hourly readings for venturi meter Nos. 1, 3, and 4. Additionally, Table 6 also provides the absolute bias estimates for the first hourly readings taken from venturi meter Nos. 1, 3, and 4 based on the following equation:

$$s_b = CV_{flow} \cdot Q_{\substack{first \\ hour}} = \pm(0.02047)(27\,MGD) = \pm 0.553\,MGD \qquad \textit{Equation (7)}$$

where S_b is the standard deviation (or absolute uncertainty) of the flow measurement due to the respective systematic uncertainty estimate, CV_{flow} is the relative uncertainty in the flow rate and $Q_{first\ hour}$ is the flow for the first hour.

Table 6
Absolute Bias Estimates for the
First Hourly Readings
Taken on September 1, 1998

Venturi No.	Bias Component	Type of Bias	CV_b(%)	S_b (MGD)
1	Venturi			
	– *Manufacturer*	Direction unknown	± 0.500	± 0.135
	Approach lengths	Direction known	- 0.500	- 0.135
	Pressure transmitters			
	– *Accuracy*	Direction unknown	± 2.047	± 0.553
	– *Temperature*	Direction unknown	± 0.910	± 0.246

Table 6
Absolute Bias Estimates for the
First Hourly Readings
Taken on September 1, 1998

Venturi No.	Bias Component	Type of Bias	CV_b(%)	S_b (MGD)
	Calibrator			
	– *Pressure*	Direction unknown,	± 2.009	± 0.542
	– *Current*	but in same direction	± 0.400	± 0.108
		for all meters		
3	Venturi			
	– *Manufacturer*	Direction unknown	± 0.500	± 0.150
	Approach lengths	Direction known	- 0.500	- 0.150
	Pressure transmitters			
	– *Accuracy*	Direction unknown	± 1.658	± 0.497
	– *Temperature*	Direction unknown	± 0.737	± 0.221
	Calibrator			
	– *Pressure*	Direction unknown,	± 1.628	± 0.488
	– *Current*	but in same direction	± 0.378	± 0.113
		for all meters		
4	Venturi			
	– *Manufacturer*	Direction unknown	± 0.500	± 0.175
	Approach lengths	Direction known	- 0.500	- 0.175
	Pressure transmitters			
	– *Accuracy*	Direction unknown	± 1.218	± 0.426
	– *Temperature*	Direction unknown	± 0.541	± 0.189
	Calibrator			
	– *Pressure*	Direction unknown,	± 1.196	± 0.419
	– *Current*	but in same direction	± 0.349	± 0.122
		for all meters		

The systematic uncertainty estimates for meter Nos. 1, 3, and 4 can be combined as shown below in *Equation (8)* to determine the overall hourly systematic uncertainty for September 1, 1998. To determine the uncertainty of the sum of the three measurements, the individual uncertainty estimates should be combined on the basis of absolute uncertainty (i.e., standard deviations) and not relative uncertainty (i.e., coefficient of variation).

$$S_b = \sum_{i=1}^{l_1}\sum_{j=1}^{m} S_{b_{ij\ \substack{direction\\known}}} \pm \left[\sum_{i=1}^{l_2}\sum_{j=1}^{m} S^2_{b_{ij\ \substack{direction\\unknown}}} + \sum_{i=1}^{l_3}\left(\sum_{j=1}^{m} S_{b_{ij\ \substack{unknown\\but\ in\ same\\direction}}}\right)^2\right]^{\frac{1}{2}}$$

Equation (8)

Where:

S_b	=	Combined uncertainty or standard deviation of the flow measurement.
$S_{bij\ direction\ known}$	=	Absolute bias uncertainty of known direction for measurement *i,j*.
$S_{bij\ unknown\ but\ in\ same\ direction}$	=	Absolute bias uncertainty of unknown direction but known to occur in the same direction for each meter for measurement *i,j*.
$S_{bij\ direction\ unknown}$	=	Absolute bias uncertainty of unknown direction for measurement *i,j*.
m	=	The number of meters.
l_1, l_2, l_3	=	The number of uncertainty components in $S_{bij\ direction\ known}$, $S_{bij\ direction\ unknown}$, and $S_{bij\ unknown\ but\ in\ same\ direction}$, respectively. This process was repeated for each of the 24-hour readings taken during the day. The results are provided in Table 7

For the first hour, using *Equation (8)*, the overall absolute bias uncertainty was found to be -0.46 ± 1.875 MGD, which corresponds to a relative uncertainty of -0.50 ± 2.04 percent (i.e., -0.46 ± 1.875 MGD divided by the total flow rate of 92 MGD). This process was repeated for each of the 24-hour readings taken during the day. The results are provided in Table 7.

(2) Random Error

Only the SCADA uncertainty and the pressure transmitter's dead band were identified as being random in nature. The manufacturer states that the SCADA's analog-to-digital conversion can take place with an uncertainty of ± 1.25 percent of full scale. As mentioned earlier, it was assumed that full scale refers to full scale of the venturi-type meter. Since meter Nos. 1, 3,and 4 have identical capacities of ± 122.1 MGD, they have the same absolute random uncertainties due to the SCADA system or ± 1.526 MGD (± 0.0125 times 122.1 MGD). However, each meter's

relative uncertainty would differ since the meters have differing hourly flow rates. The relative uncertainty estimate for the SCADA system would be ± 5.652 percent (i.e., ± 1.526 MGD divided by 27 MGD), ± 5.087 percent (i.e., ± 1.526 MGD divided by 30 MGD) and ± 4.360 percent (i.e., ± 1.526 MGD divided by 35 MGD) for meter Nos. 1, 3, and 4, respectively.

The Johnson Yokogawa transmitters have a dead band of ± 0.05 percent calibrated span. The uncertainty due to the dead band of the pressure transmitters can be calculated using the methodology shown in *Equation (4).* The uncertainty in the pressure differential measurement due to dead band would be ± 0.120 inches of water (i.e., ± 0.0005 times 239.52) for all the venturi meters. Applying *Equation (4)*, the uncertainty in the flow rate due to the dead band of the pressure transmitter would then be ± 0.512, ± 0.414 and ± 0.304 percent of flow for meter Nos. 1, 3, and 4, respectively.

The overall absolute random uncertainty can be determined by combining the absolute random uncertainties due to the SCADA system and the dead band of the pressure transmitter for venturi Nos. 1, 3, and 4 using the root-mean-square method. The method results in an overall random uncertainty of ± 2.65 MGD or ± 2.88 percent (i.e., ± 2.65 MGD divided by 92 MGD).

(3) Combining Systematic and Random Errors

The systematic and random errors can be combined using the following methodology:

$$S_b = \sum_{i=1}^{l_1}\sum_{j=1}^{m} S_{b_{ij\ \text{direction known}}} \pm \left[\sum_{i=1}^{l_2}\sum_{j=1}^{m} S^2_{b_{ij\ \text{direction unknown}}} + \sum_{i=1}^{l_3}\left(\sum_{j=1}^{m} S_{b_{ij\ \text{unknown but in same direction}}}\right)^2 + \sum_{i=1}^{l_4}\sum_{j=1}^{m} S^2_{r_{ij}}\right]^{\frac{1}{2}} \qquad \textit{Equation (9)}$$

Where:

S_{rij}	=	Absolute random uncertainty.
l_4	=	The number of uncertainty components in S_{rij}..

Using *Equation (9)*, the overall uncertainty of the sum of the three flow measurements made in the first hour of September 1, 1998, is -0.46 ± 3.248 MGD, or -0.5 ± 3.53 percent.

This process is repeated for each of the 24-hour readings taken during the day and the results can be seen in Table 7. The average uncertainty, *CV*, of an hourly flow measurement performed on September 1 was -0.5 ± 3.45 percent. This implies that the 95-percent confidence interval, *CI*, for an hourly flow measurement would be -0.5 ± 7.14 percent (-0.5 ±[3.45 times 2.069]). Over the entire study period, the average uncertainty of an hourly flow measurement, *CV*, was also found to

be -0.5 ± 3.49 percent. The average 95-percent confidence interval of an hourly flow measurement, *CI*, would then be equal to -0.5 ± 6.84 percent (-0.5 ±[3.49 times 1.960]).

Table 7
Systematic, Random, and Overall Uncertainty Estimates for Hourly Flow Measurements Made on September 1, 1998

Hour	Total Flow (MGD)	CV_b (%)	S_b (MGD)	CV_r (%)	S_r (MGD)	Overall CV (%)
1	92	-0.5 ± 2.04	-0.460 ± 1.875	± 2.88	± 2.653	-0.5 ± 3.53
2	88	-0.5 ± 2.10	-0.440 ± 1.846	± 3.02	± 2.653	-0.5 ± 3.67
3	90	-0.5 ± 2.01	-0.450 ± 1.807	± 2.95	± 2.653	-0.5 ± 3.57
4	87	-0.5 ± 2.17	-0.435 ± 1.807	± 3.05	± 2.654	-0.5 ± 3.74
5	93	-0.5 ± 1.91	-0.465 ± 1.775	± 2.85	± 2.653	-0.5 ± 3.43
6	105	-0.5 ± 1.53	-0.525 ± 1.605	± 2.52	± 2.651	-0.5 ± 2.95
7	104	-0.5 ± 1.54	-0.520 ± 1.605	± 2.55	± 2.651	-0.5 ± 2.98
8	98	-0.5 ± 1.77	-0.490 ± 1.737	± 2.71	± 2.652	-0.5 ± 3.23
9	90	-0.5 ± 2.01	-0.450 ± 1.810	± 2.95	± 2.653	-0.5 ± 3.57
10	85	-0.5 ± 2.24	-0.425 ± 1.907	± 3.12	± 2.654	-0.5 ± 3.84
11	91	-0.5 ± 1.98	-0.455 ± 1.797	± 2.92	± 2.653	-0.5 ± 3.52
12	88	-0.5 ± 2.10	-0.440 ± 1.846	± 3.02	± 2.653	-0.5 ± 3.67
13	90	-0.5 ± 2.01	-0.450 ± 1.810	± 2.95	± 2.653	-0.5 ± 3.57
14	90	-0.5 ± 2.01	-0.450 ± 1.810	± 2.95	± 2.653	-0.5 ± 3.57
15	93	-0.5 ± 1.92	-0.465 ± 1.786	± 2.85	± 2.653	-0.5 ± 3.44
16	93	-0.5 ± 1.91	-0.465 ± 1.776	± 2.85	± 2.653	-0.5 ± 3.43
17	87	-0.5 ± 2.13	-0.435 ± 1.852	± 3.05	± 2.653	-0.5 ± 3.72
18	98	-0.5 ± 1.73	-0.490 ± 1.697	± 2.71	± 2.652	-0.5 ± 3.21
19	100	-0.5 ± 1.67	-0.500 ± 1.672	± 2.65	± 2.652	-0.5 ± 3.13
20	100	-0.5 ± 1.67	-0.500 ± 1.672	± 2.65	± 2.652	-0.5 ± 3.13
21	94	-0.5 ± 1.88	-0.470 ± 1.764	± 2.82	± 2.653	-0.5 ± 3.39
22	95	-0.5 ± 1.84	-0.475 ± 1.747	± 2.79	± 2.652	-0.5 ± 3.34
23	88	-0.5 ± 2.11	-0.440 ± 1.856	± 3.02	± 2.653	-0.5 ± 3.68
24	92	-0.5 ± 1.97	-0.460 ± 1.810	± 2.88	± 2.653	-0.5 ± 3.49

B. Uncertainty of Daily Volume Measurements

An estimate of the uncertainty of the daily volume pumped through the station can be obtained from the 24 hourly flow measurements. The volume pumped through the Western Station is the average of the 24 hourly flow measurements times 1 day. For September 1, 1998, the average volume pumped through the station is 93.0 million gallons (MG).

The uncertainty of the systematic daily volume measurements can be determined using the following equation:

$$CV_{Vb} = CV_{bV_{\substack{direction \\ known}}} + \frac{\Delta t}{m_v}\left(\sum_{k=1}^{n} Q_k^2 CV^2_{b_{\substack{direction \\ unknown}}} + \left(\sum_{k=1}^{n} Q_k CV_{b_{\substack{unknown \\ but\ in\ same \\ direction}}}\right)^2\right)^{\frac{1}{2}} \qquad \textit{Equation (10)}$$

Where:

CV_{Vb}	=	Relative uncertainty of the total bias volume measurement.
$CV_{bV\ direction\ known}$	=	Bias with known direction of the total volume measurement.
$CV_{bk\ direction\ unknown}$	=	Bias error in individual flow measurement *k* where the bias direction is unknown.
$CV_{bk\ unknown\ but\ in\ same\ direction}$	=	Bias error in individual flow measurement *k* where the bias direction is unknown, but in the same direction for all meters.
Δt	=	Time increment.
Q_k	=	Value of flow measurement *k*.
m_V	=	Sum of all *n* volume measurements.

Using *Equation (10)*, the relative systematic error, CV_{Vb}, was -0.50 ± 1.61 percent for September 1, 1998.

The average random uncertainty component for the daily volume can be obtained from the following expression:

Equation (11)

$$CV_{Vr} = \pm \frac{\Delta t}{m_v}\left(\sum_{k=1}^{n} Q_k^2 CV_{rk}^2\right)^{\frac{1}{2}}$$

Where:

CV_{rk}	=	Random error in individual flow measurement *k*.
CV_{Vr}	=	Relative uncertainty of the volume measurement.

Using *Equation (11)*, the relative random uncertainty of the daily volume, CV_v, for September 1, 1998, is ± 0.58 percent.

The overall uncertainty of the daily volume can then be found by combining the systematic and random uncertainty components in the following manner:

$$CV_V = CV_{bV_{\substack{direction\\known}}} + \frac{\Delta t}{m_v}\left(\sum_{k=1}^{n} Q_k^2 CV_{b_{k_{\substack{direction\\unknown}}}}^2 + \left(\sum_{k=1}^{n} Q_k CV_{b_{k_{\substack{unknown\\but\ in\ same\\direction}}}}\right)^2 + \sum_{k=1}^{n} Q_k^2 CV_{r_k}^2\right)^{\frac{1}{2}}$$ *Equation (12)*

For the date in question, the overall uncertainty of the daily volume, CV_V, was found to be -0.50 ± 1.71 percent, or -0.465 ± 1.590 MG (-0.50 ± 1.71 percent times 93.0 MG). The 95-percent confidence interval on the daily volume, CI_v, would then be -0.50 ± 3.54 percent (-0.50 ±[1.71 times 2.069]). Note that the 95-percent confidence interval for the daily volume (-0.50 ± 3.54 percent) is much narrower than the 95-percent confidence interval for the hourly flow measurement (-0.50 ± 7.14 percent). This is because the random errors and systematic errors with unknown direction associated with an hourly flow measurement are statistically canceled when they are summed over a day's time. The average random, systematic, and overall uncertainty for each day in each 2-week study period were found using the above method. A summary of the daily volume uncertainties for the September 1998 study period appears in Table 8.

Table 8
Estimated Uncertainties for Daily Volumes in September 1998 Study Period

Date	CV_{vb} (%)	CV_{vr} (%)	CV_v (%)	CI_v (%)
September 1	-0.50 ± 1.61	± 0.58	-0.50 ± 1.71	-0.50 ± 3.54
September 2	-0.50 ± 1.48	± 0.56	-0.50 ± 1.58	-0.50 ± 3.28
September 3	-0.50 ± 1.57	± 0.57	-0.50 ± 1.67	-0.50 ± 3.46
September 4	-0.50 ± 1.63	± 0.59	-0.50 ± 1.73	-0.50 ± 3.59
September 5	-0.50 ± 1.73	± 0.61	-0.50 ± 1.84	-0.50 ± 3.80
September 6	-0.50 ± 1.40	± 0.53	-0.50 ± 1.50	-0.50 ± 3.10
September 7	-0.50 ± 1.79	± 0.61	-0.50 ± 1.89	-0.50 ± 3.91
September 8	-0.50 ± 1.58	± 0.64	-0.50 ± 1.71	-0.50 ± 3.53
September 9	-0.50 ± 1.29	± 0.63	-0.50 ± 1.43	-0.50 ± 2.97
September 10	-0.50 ± 1.04	± 0.56	-0.50 ± 1.18	-0.50 ± 2.45
September 11	-0.50 ± 0.96	± 0.53	-0.50 ± 1.10	-0.50 ± 2.27
September 12	-0.50 ± 0.86	± 0.50	-0.50 ± 0.99	-0.50 ± 2.05
September 13	-0.50 ± 0.89	± 0.51	-0.50 ± 1.03	-0.50 ± 2.12
September 14	-0.50 ± 1.08	± 0.57	-0.50 ± 1.22	-0.50 ± 2.53

C. Uncertainty of Annual Volume Measurements

The uncertainty in the annual volume pumped through the station can be estimated using the estimated uncertainty in daily volume measurements. As mentioned earlier, the study period consisted of 2-week periods in September 1998, and February and May of 1999. In total, there were 42 days in the study period. Over this time period, the average systematic uncertainty for a daily volume measurement, CV_b, was determined to be -0.50 ± 1.33 percent (± 0.21 percent from unknown biases and ± 1.31 percent from unknown biases known to be in the same direction for all meters) and the average random uncertainty for a daily volume measurement, CV_r, was estimated to be ± 0.61 percent. The average uncertainty in daily volume would then be -0.50 ± 1.47 percent, and the average 95-percent confidence interval for the daily volume would be -0.50 ± 3.03 percent. The uncertainty in the annual volume pumped through the Western Station, CV_V can be determined as follows:

$$CV_V = CV_{\substack{b_{direction} \\ known}} \pm \left(\frac{CV^2_{\substack{b_{direction} \\ unknown}}}{n} + CV^2_{\substack{b_{unknown} \\ but\ in\ same \\ direction}} + \frac{CV_r^2}{n} \right)^{\frac{1}{2}}$$

Equation (13)

$$= -0.50 \pm \left(\frac{0.21^2}{365} + 1.31^2 + \frac{0.61^2}{365} \right)^{\frac{1}{2}} = -0.50 \pm 1.31\%$$

The 95-percent confidence interval of the annual volume, CI_v, would then simply be -0.50 ± 2.57 percent (-0.50 ±[1.31 times 1.960]). The 95-percent confidence interval for the annual volume (-0.50 ± 2.57 percent) is slightly less than the 95-percent confidence interval for the daily volume (-0.50 ± 3.03 percent. Most of the random error and unknown bias error associated with the daily volume measurement is statistically cancelled when determining the uncertainty of the annual volume.

4. Quality Assurance

If the water accounting system is moved to the lakefront, there is a concern that if one of the direct diverter's flow measurement systems goes down, that there would be no way to measure the withdrawals from the lake. Thus, it is desirable that the direct diverters have a backup measurement system and, if possible, some other independent check on the measurements to ensure that the measurements are reasonable and accurate.

There are many backup systems at the Western Station. If a problem is detected in a particular venturi meter or its corresponding pressure transmitter, that venturi meter and its pump can be shutdown and a different venturi and pump can be used in its place for metering and distribution. Also, all of the venturi meters at the Western Station are equipped with manometers that can be used as a backup to the pressure transmitters.

The SCADA system used to totalize the flow consists of several elements. A schematic of the SCADA system showing the flow and storage of data is provided in Appendix B. The signal from each pressure transmitter is sent to a computer (CP2), located at the plant, where the flow data is displayed, processed, and temporally stored. This computer is only capable of storing 3 days' worth of data. Therefore, the control center computer system (CP3) located at the Jardine water treatment plant reads the data from the CP2 and is responsible for storing and maintaining the flow records. Note that if CP2 were to fail, the data would not be communicated to CP3. The CP3 central control computer system consists of two computers with automatic failover such that if one computer fails, the other one takes over automatically. Both of these computers store data from the pumping station so none of the data should be lost in the event that either computer fails. The data stored on CP3 is also backed up on tape.

The data is transferred from the CP2 computer at the plant to the CP3 computer at Jardine over a dedicated communication line (i.e., a telephone line). This communication line does not have a backup. However, since the CP2 at the station can store up to 3 days' of data, no data will be lost if the line is repaired within 3 days.

If the SCADA system were to fail, flow data can still be obtained from the chart recorders or manometers at the Western Station. This data would then be manually inputted in the SCADA system once the problems with the SCADA system were corrected.

The chart recorder system is used as an independent check of the flow measurement system used at the Western Station. If the average of the 24-hour readings on the daily log sheet differs by more than 2 percent from the chart recorder, the City investigates the source of the discrepancy. Thus, by monitoring the difference between the chart recorder and the daily log sheets, the City will be able to catch malfunctions in their measurement system relatively quickly.

5. Summary of Inadequacies in the Current Metering Systems

For the most part, the current metering system provided a reasonable level of accuracy and has acceptable quality assurance. The following portion of the metering system appears to be deficient.

- The actual venturi meters are not calibrated. Rather, the City assumes that the manufacturer's rating curves are correct. Calibration of the venturis would confirm or deny this assumption.

- The overall accuracy in estimating the water supply pumpage is dependent upon many measurement and analysis functions. The documented technical review and much previous work were focused on the accuracy of the pumpage measurements in hardware (i.e., meters, calibrator, pressure transmitter, etc.) and software (SCADA, etc.). This analysis does not take into account procedural errors such as inconsistent data in water supply pumpage as a result of the reporting mechanism.

6. Recommendations for Long-Term QA/QC and Improvements to Metering

Recommendations for long-term QA/QC and improvements to metering are as follows:

- Calibration of the venturi meters to determine if the manufacturer's rating curves are valid.

- Occasional inspection and measurement, if physically possible, of the inlet and throat of the venturi meters to determine any possible presence and effects of corrosion and tuberculation on the meter's accuracy.

- The pressure transmitters are calibrated for a very large range of operating pressure (239.52 inches of water). For daily operation at the Western Station, the measured differential pressure is approximately 20 inches of water at 35 MGD. If the station were to ever replace the transmitters, a device that has an narrower calibration span and yet covers the operation range of the station should be considered such that many intrinsic measurement uncertainty components can be minimized.

- Routine auditing of various water withdrawal reports, as part of the long-term QA/QC, as a means of accounting for procedural errors.

7. Conclusions

Some of the important conclusions are summarized below:

- For operational purposes, the City can determine the hourly flow measurement reading to within -0.5 ± 6.84 percent at the Western Station. This value takes into account the random and systematic uncertainty associated with the venturi meters, pressure transmitters, calibration equipment, and recording system.

- On an annual basis, the total volume pumped through the station can be determined to within -0.50 ± 2.57 percent. The 95-confidence interval for the annual volume is narrower than the 95-percent confidence interval for the hourly flow measurements made at the Western Station because the random and unknown bias errors associated with the measurement are statistically cancelled when the measurements are summed over a year's time.

- There is some form of backup system for all the measurements made at the Western Station. No loss of flow data is likely under most conditions.

- The chart recorders at the Western Station can be used as a check on the flow measurement system. The difference between the chart recorders and the daily log sheets should be less than 2 percent. A difference greater than 2 percent indicates there may be a problem within the flow measurement system.

References

American Society of Mechanical Engineers, *Fluid Meters: Their Theory and Application*. ASME, New York, 6th ed., 1971.

Ametek Power Instruments, *Rochester DPG-700 Precision Digital Pressure Gauge* http://www.rochester.com/Products/RIS/dgp-700.htm.

Analog Input Module PPX:505-6108A Electrical Specification [for the SCADA system]. Date not provided.

Correspondence. Written correspondence between Conrad Bazylewski of the City of Chicago and F. L. Sommer of F. B. Leopold Company, regarding the *Printed Accuracy Data on the Venturi Tubes and Simplex Flow Meters*, March 16, 1977.

Mead & Hunt, Inc., *Technical Review of Lake Michigan Water Withdrawals by the City of Evanston* Draft, July 2000.

Mead & Hunt, Inc., *Technical Review of Lake Michigan Withdrawals – Southwest Pumping Station*, February 2002.

Meriam Instrument, General Installation, Operation and Maintenance Instructions for Meriam Manometers, April 1992.

Miller, Richard W., *Flow Measurement Engineering Handbook*, McGraw-Hill, New York, 1996.

International Organization for Standardization, *Measurements of Fluid Flows by Means of Pressure Differential Devices*, ISO, Switzerland, 1991.

Spitzer, David W., *Industrial Flow Measurement*. Instrument Society of America, North Carolina, 1990.

Yokogawa Electric Corporation, *Instruction Manual–UNIΔ MarkII Electronic Differential Pressure Transmitters*, 3rd Edition, Date not provided.

Final Report

Technical Review of Central Lake County Joint Action Water Agency Treatment Facility

City of Lake Bluff

Prepared for:

U.S. Army Corps of Engineers – Chicago District
Chicago, Illinois

Prepared by:

MEAD & HUNT

August 2003

Table of Contents

Page

Executive Summary . . . . . E-i

1. General Description 1
   A. Summary of Operation 1
   B. Flow Measurement 1
   C. Flow Totalization 2
   D. Calibration 2

2. Uncertainty of Individual Components 3
   A. Venturi-Type Meters 3
   B. Pressure Taps 3
   C. Meter Installation 3
   D. Sampling 4
   E. Pressure Differential Measurement 5
   F. Dry Calibration of Pressure Transmitters 5
   G. SCADA System 5

3. Sample Uncertainty Calculation for Effluent Meters 7
   A. Uncertainty of Hourly Flow Measurements 7
      (1) Systematic (Bias) Error 7
      (2) Random Error 11
      (3) Combining Systematic and Random Errors 12
   B. Uncertainty of Daily Volume Measurements 13
   C. Uncertainty of Annual Volume Measurements 15

4. Quality Assurance 17

5. Summary of Inadequacies in the Current Metering Systems 18

6. Recommendations for Long-Term QA/QC and Improvements to Metering 19

7. Conclusions 20

References 21

Appendix – Station Schematic

List of Tables

Table		Page
1	Summary of Venturi-Type Meter Used at the CLCJAWA Facility	2
2	Upstream Disturbances and Approximate Approach Lengths for the Various Venturi Meters at the CLCJAWA Facility	4
3	Uncertainty From Pressure Transmitters and Calibration Equipment for the First Hourly Readings on September 1, 1999 for Venturi No. 1	9
4	Absolute Bias Estimates for the First Hourly Readings Taken on September 1, 1999	10
5	Systematic, Random, and Overall Uncertainty Estimates for Hourly Flow Measurements Made on September 1, 1999	12
6	Estimated Uncertainties for Daily Volumes in September 1999 Study Period	15

Executive Summary

Currently, diversion of water from Lake Michigan for the state of Illinois is measured at the Chicago Sanitary and Ship Canal at Romeoville. The Great Lakes Mediation Memorandum of Understanding established a lakefront diversion accounting system and specified a 3-year transition period to assess the technical acceptability of moving the diversion measurement system to the lakefront. A lakefront diversion accounting system requires metering of all domestic water withdrawals from Lake Michigan and the direct diversions into the Chicago Sanitary and Ship Canal system at the Chicago River, the Calumet River, and the North Shore Channel at Wilmette. During the 3-year transition period, the U.S. Army Corps of Engineers (USACE) has been tasked to initiate a technical review of the accuracy of the reported domestic withdrawals from Lake Michigan.

The USACE retained Mead & Hunt, Inc., to evaluate the accuracy of domestic withdrawals from Lake Michigan. A total of 12 pumping stations in the city of Chicago (City) and six suburban pumping stations will be evaluated. These evaluations include revisions to the investigations conducted on the City's Mayfair and Thomas Jefferson Stations and the city of Evanston's Station by the Illinois District of the U.S. Geological Survey. This report presents a summary of the flow measurement techniques at the Central Lake County Joint Action Water Agency Treatment Facility (CLCJAWA Facility), as well as an estimate of the uncertainty of a daily volume measurement and an annual volume measurement. Presently, the CLCJAWA Facility consists of two raw water meters, four influent plant meters, and one finished water meter. For this analysis, we will analyze the finished water metering system.

To obtain an estimate of the uncertainty of an individual flow measurement, we examined the manufacturer's accuracy specifications for the finished water primary flow measurement devices (i.e., the venturi-type meter) and secondary measurement devices (i.e., the pressure transmitters). The CLCJAWA Facility's calibration technique, sampling technique, and device installation were also examined. All of the sources of uncertainty identified from this analysis were then classified as either random or systematic in nature. Using this information and the data logs provided by the CLCJAWA Facility, we obtained an estimate of the uncertainty of an individual flow measurement for the finished water meter. From this information, an estimate of the uncertainty of the daily and annual volume withdrawn from the lake can be obtained using standard statistical techniques.

Some of the important conclusions are summarized below:

- For operational purposes, the City can determine the hourly flow measurement reading to within -0.50 ± 4.66 percent at the CLCJAWA Facility. This value takes into account the random and systematic uncertainty associated with the venturi meters, pressure transmitters, calibration equipment, and recording system.

- On an annual basis, the total volume pumped through the facility can be determined to within -0.50 ± 0.04 percent. The 95-percent confidence interval for the annual volume is narrower than the 95-percent confidence interval for the hourly flow measurements made at the CLCJAWA Facility because the random and unknown bias errors associated with the measurement are statistically canceled when the measurements are summed over a year's time.

- With the exception of the SCADA system, all the metering system has redundancy or backup for quality assurance. There is no backup data recorder at this time; however, since the plant is manned 24-hours a day, data can be recorded manually, if necessary.

- The raw water, influent, and recycle meters can be used as an independent check of the finished water flow measurement to determine if there is a problem within the measurement system.

Technical Review of Central Lake County Joint Action Water Agency Treatment Facility

City of Lake Bluff

1. General Description

A. Summary of Operation

At the Central Lake County Joint Action Water Agency Treatment Facility (CLCJAWA Facility) flow from Lake Michigan is measured at the raw water intake using a 36-inch venturi meter. Within the facility, influent water goes through one of three venturi meters for processing. Recycled wash water re-enters the system downstream of the 36-inch raw meter. Finished or effluent water is metered with a 36-inch venturi. The agency installed an additional raw intake meter and a fourth plant influent during the summer of 2000. The accuracy analysis for this plant was performed on the finished metering.

Rosemont differential pressure transmitters are installed on all the meters described above. The output signals from the transmitters are sent every 5 seconds to a Supervisory Control and Data Acquisition (SCADA) system located at the CLCJAWA Facility and are integrated to provide cumulative totals. Should the lakefront venturi's transmitters fail, readings can be taken from the three raw water venturi meters located at the branch point from the main line at the inflow point to the treatment plant. Since this SCADA system was installed in 1999, this analysis will be performed on data taken after this installation. A schematic of plant operations is included in the Appendix.

B. Flow Measurement

Meters measure flow at several locations in the system. There is a 36-inch venturi at the raw intake line, three at the plant influent lines, one on the backwash line, and 15 meters that measure individual finished distribution lines. Since the beginning of this study, the CLCJAWA has expanded its facilities to include two additional meters, one at the raw intake and the other at plant influent lines.

The 36-inch effluent meter, which is the point of measured flow that will be considered in this analysis, is a Primary Flow Signal venturi-meter. It was installed in 1990. It is a variation of the universal venturi meter. Universal venturis, developed in the 1960s with a single tap, result in less headloss. A summary of the effluent meter's specifications is provided in Table 1.

Table 1
Summary of Venturi-Type Meter Used at the CLCJAWA Facility

Manufacturer	Model No.	Approach Pipe Diameter (inches)	Throat Diameter (inches)	Coefficient of Discharge	β-Ratio	Maximum Flow Rate (MGD)*
Primary Flow Signal	36-inch C HVT-CI	36	25.2	0.997	0.700	60

** Millions of gallons per day*

C. Flow Totalization

The output from the meter's transmitter is sent to the SCADA system. The Momentum Programmable Logic Controller (PLC) from Square D is used for local flow totalization and control of each of the CLCJAWA's delivery structures, including the 36-inch effluent meter. This system samples output from the pressure transmitter and totalizes the flow every 5 seconds. The hourly totals are recorded to determine the total volume pumped through the system on a daily basis. There are no chart recorders at the CLCJAWA Facility.

D. Calibration

An effective calibration procedure should calibrate both the primary flow meter and its secondary measurement device. First, the secondary measurement device, such as a pressure transducer, should be calibrated to ensure it is reading correctly. Then, the flow meter itself should be calibrated to ensure it is functioning properly. The CLCJAWA does not perform any wet calibrations on the primary flow meters or their secondary measurement devices. Thus, all of the CLCJAWA's calibrations can be considered inferential in nature. Calibration is performed on all the venturi meters semi-annually as described in the following paragraphs.

A dry calibration is performed on the venturi meter's differential pressure transmitter. This procedure consists of flushing the lines, applying a pressure, and measuring inches of water to the high side of the transmitter with a Fluke 700P04 pressure module and reading the corresponding mA DC output with the Fluke 702 calibrator for five points over the range.

The calibrator equipment is sent out for calibration and certification annually.

For the primary flow measurement device, the CLCJAWA assumes the manufacturer's rating tables are correct.

2. Uncertainty of Individual Components

A. Venturi-Type Meters

The venturi meter was installed in 1990. Manufacturer's specifications cite an accuracy of ± 0.5 percent of the actual flow rate. According to Primary Flow Signal representatives, this accuracy is good for flows with Reynold's number greater than 75,000, which equates to about 1.4 MGD. At lower flows, the inaccuracy increases. This uncertainty is systematic in nature with an unknown bias direction. Since the meter is a relatively new installation, it is assumed that there will be no additional uncertainty due to corrosion or tuberculation of the venturi meter.

B. Pressure Taps

The venturi meter installation includes pressure taps. The taps that are used to measure the pressure should be square with no roughness, burrs, or wire edges (Miller, 1996). If this were not the case, then a bias error would be introduced due to the pressure taps. It was not practical to inspect the pressure taps of these meters. However, the flow measurement devices were constructed under a controlled-manufacturing environment with very little opportunity for a pressure tap to be constructed poorly. Thus, we assumed that the manufacturer constructed the pressure taps correctly and that no additional error would be introduced due to the pressure taps.

Any uncertainty due to pitting around the pressure tap was already taken into account in the previous section.

C. Meter Installation

An appropriate length of straight, circular pipe is required upstream of the flow meter to guarantee that the velocity profile entering the meter is not distorted and that the meter will perform properly. The length of this approach section depends on number and types of bends and fittings located upstream of the meter.

Table 2 lists the approximate approach lengths and upstream fittings for the 36-inch finished water meter at the CLCJAWA Facility. The "Required Approach Length for Zero Error and 0.5 Percent Error" values reported in Table 2 were taken from ISO 5167-1:1991. As shown in Table 2, the 36-inch finished water meter has the required minimum length for the first upstream length of pipe (i.e., reducer), but not the second (i.e., single bend) one. The ISO reference only provides length requirements for zero error and 0.5 percent error, and since the second upstream fitting's length is less than the 0.5 percent error value, its error could be greater than 0.5 percent, but the extent is unknown. Therefore, an additional 0.5 percent error due to installation will be assumed for this analysis. Based on manufacturer's literature, the flow readings will be under-reported.

Table 2
Upstream Disturbances and Approximate Approach Lengths for the Various Venturi Meters at the CLCJAWA Facility

Venturi	First Upstream Fitting	First Upstream Approach Length (feet)	Required Pipe Length for Zero Error (feet)	Required Pipe Length for 0.50 % Error (feet)	Second Upstream Fitting	Second Upstream Approach (length, feet)	Required Pipe Length for Zero Erro r (feet)	Required Pipe Length for 0.5% Error (feet)
36-inch finished	Reducer	32.0	31.5	7.5	One bend	2.0	6.0	3.0

Inadequate straight piping downstream of the meter can also affect the meter's accuracy. ISO 5167-1:1991 reference materials indicate that as long as the downstream length of straight piping exceeds four times the meter's throat diameter, no additional error is expected. Unlike for the upstream piping lengths, the ISO 5167-1:1991 reference does not indicate what length would be required to provide an uncertainty of 0.5 percent or any other uncertainty value. The 36-inch finished water meter has a throat diameter of 25.2 inches (2.1 feet). Given this, 8.4 feet of straight piping is required to ensure no additional uncertainty due to the downstream piping installation. The 36-inch finished water venturi only has 2.5 feet of straight piping before the meter's first downstream obstruction. Although the downstream length does not meet downstream piping requirement of 4 throat diameters, no error value is available in the ISO 5167-1:1991 reference. Therefore, although additional error may be present due to the downstream piping, it cannot be quantified and included in the actual uncertainty calculations.

D. Sampling

Additional uncertainty can also be introduced due to how the flow measurement data is recorded. If, for example, a quantity varies sinusoidally, but that quantity is only measured at the times when the quantity is at a peak, then the average measurements will be higher than the true average. This would introduce a bias into the system. On the other hand, if a quantity is measured or sampled frequently, then there will be very little error introduced due to sampling. The flow rates at the CLCJAWA Facility are sampled every 5 seconds, and these readings are used to determine the average daily volume pumped through the station. This implies that the daily volume measurements are actually composed of about 17,280 individual flow measurements. Because the CLCJAWA records the flow rate so often, there should be no error introduced due to sampling.

E. Pressure Differential Measurement

A Rosemont Model 1151DP differential pressure transmitter is used to measure flow through a 36-inch venturi meter. It was assumed that the accuracy specifications provided by the manufacturer were correct.[1] The transmitter's accuracy of ± 0.2 percent of the calibrated span includes combined effects of hysteresis, repeatability, and independent linearity. The stability is reported at ± 0.2 percent of the upper range limit for 6 months. Calibration records provided by CLCJAWA indicate that the pressure transmitters are calibrated with a maximum span value of 45.54 inches of water. Based on this span, information, and the transmitter specifications, it is assumed that the Rosemount 1151 transmitter used at the CLCJAWA Facility has an upper range limit of 150 inches of water. The bias introduced due to temperature effects is reported at ± 1.0 percent of the span per 100 degrees F. The CLCJAWA does not monitor effluent temperature, so the water temperature is assumed to be similar to the lake temperature variation, about a 40-degree range between 32 to 70 degrees F. Thus, the bias due to temperature effects would be about ± 0.40 percent of the span. Vibration, power supply, load, and mounting position effects, outlined in the specifications, were assumed to be insignificant compared to the others. All of the uncertainty components for the pressure transmitters are systematic in nature with an unknown bias direction.

F. Dry Calibration of Pressure Transmitters

The secondary measurement devices are dry-calibrated annually. The Rosemont pressure transmitter is calibrated by inducing a pressure using a Fluke 700P04 pressure module and reading the corresponding mA DC output with a Fluke 702 calibrator for a 5-point range. The accuracy of the Fluke 702 is ± 0.025 percent of the reading + 0.025 percent of the full scale. The Fluke Model 700P02 has a total uncertainty of 0.07 percent of the full scale for 1-year certification. Full scale of the Fluke 700P04 pressure module is 15 pounds per square inch ([psi] 415.6 inches of water) and full scale of the Fluke 702 calibrator is 30.00 mA. These uncertainties are systematic in nature with an unknown direction of bias.

G. SCADA System

The output from the meters' transmitters is sent to the SCADA system. The Momentum Programmable Logic Controller (PLC) from Square D is used for local flow totalization and control of each of the CLCJAWA's delivery structures, including the 30-inch effluent meter. This system samples output from the pressure transmitter and totalizes the flow every 5 seconds. The hourly totals are recorded to determine the total volume pumped through the system on a daily basis. In order for the SCADA system

---

[1] The specifications provided by the CLCJAWA for the Rosemont 1151 DP transmitters were used in this analysis even though they differ from the specifications obtained for the City of Chicago's Rosemont 1151 DP transmitters. Since these specifications were provided by the CLCJAWA, they were assumed to be more accurate for the CLCJAWA's particular application.

to determine the volume pumped through the facility, the analog signal from the Rosemont pressure transmitter must be converted to a digital signal. This process is done using an analog input module.

The momentum PLC data sheet specifies an accuracy of ± 0.04 percent of the upper operating range value for current measurement. In this case, the full scale is 20 mA, which corresponds to the upper range value of the venturi meter or 60 MGD. The error due to the analog to digital conversion is random in nature.

3. Sample Uncertainty Calculation for Effluent Meters

To demonstrate how the uncertainty of the measured volume pumped through the CLCJAWA Facility was estimated, a series of sample calculations follows. The method used to estimate the uncertainty is similar to that described in the *Technical Review of Lake Michigan Water Withdrawals by the City of Evanston*. Please refer to this document for background on the statistical handling of measurement uncertainty. The City provided the hourly logs the first 2 weeks of September 1999 and February and May 2000. It was assumed that the CLCJAWA Facility's pumpages over these time periods were representative of the typical pumpages. It was also assumed that CLCJAWA's pumpages were constant over each hour reported on the daily log sheets. The uncertainty of the hourly readings and the daily reading can be obtained using these assumptions. The uncertainties can be reported as a standard deviation of measurement (expressed by the variable s) or in relative terms (expressed by the variable CV, which is the standard deviation divided by the mean of the measurements).

A. Uncertainty of Hourly Flow Measurements

(1) Systematic (Bias) Error

The majority of the error components are systematic in nature. These systematic errors include error from the venturi's inadequate installation, the pressure transmitters, and the calibration equipment. To determine the uncertainty of the hourly flow measurements, all uncertainties need to be in terms of percent accuracy of actual rate. The errors associated with the venturi and installation are already expressed in these terms. However, the accuracy associated with the pressure transmitters and calibration equipment are in terms of percent accuracy per calibrated span, upper range limit (URL), full scale (FS), or a combination of these.

The standard equation for the flow through a venturi-type meter is:

$$Q = \frac{C_d A_t}{\sqrt{1-\beta^4}} \sqrt{2g\Delta h} \qquad \textit{Equation (1)}$$

where Q is the flow rate, C_d is the discharge coefficient, A_t is the area of the throat section, β is the ratio of the throat diameter to the approach section diameter , g is the acceleration due to gravity, and Δh is the pressure differential across the meter.

The manufacturer's data on the PFS venturi specified a C_d of 0.997.

The throat area, A_t, for the venturi meter is:

$$A_t = \frac{\Pi(25.2)^2}{4} = 498.8in^2 = 3.46ft^2 \qquad \text{Equation (2)}$$

For the first hour of September 1, 20.99 MGD was flowing through the meter. The pressure differential from this flow rate can be determined from Equation (3).

$$\Delta h = \left[\frac{Q\sqrt{1-\beta^4}}{C_d A_t \sqrt{2g}}\right]^2 = 12\left[\frac{1.547(20.99\,MGD)\sqrt{1-(0.70)^4}}{(0.997)(3.46\,ft^2)\sqrt{2(32.16\,ft/s^2)}}\right]^2 = 12.56in. \qquad \text{Equation (3)}$$

The values of 12 and 1.547 that appear in Equation (3) are unit conversion factors to convert feet to inches and MGD to cfs, respectively.

The pressure differential of the finished water meter is measured using a Rosemount 1151DP pressure transmitter. Based on the manufacturer's performance specifications, this pressure transmitter has an accuracy of ± 0.2 percent of the calibrated span, a stability of ± 0.2 percent of upper range limit, and a temperature effect of ± 1.0 percent span per 100 degrees F. The calibrated span of the finished water venturi is 45.54 inches of water and the upper range limit is 150 inches of water. Thus, the uncertainty in the pressure differential measurement due to accuracy would be ± 0.091 inches of water (i.e., ± 0.002 times 45.54) for the finished water meter. The uncertainty in the flow rate due to the accuracy of the pressure transmitter would then be:

$$CV_{Qa} = \frac{Xs_p}{\Delta h} = \frac{(0.5)(\pm 0.091in)}{12.56in} = \pm 0.36\% \qquad \text{Equation (4)}$$

where CV_{Qa} is the uncertainty in the flow rate due to the accuracy of the pressure transmitter, s_p is an uncertainty in the pressure transmitter (due to transmitter accuracy in this case), X is the sensitivity coefficient equal to 0.5 for the pressure transducer as the flow is directly proportional to the square root of pressure differential in Equation (1), and Δh is the pressure differential. See *Technical Review of Lake Michigan by the City of Evanston* for additional information on the sensitivity coefficient, X. The uncertainty in the flow rate due to the transmitter's stability and temperature effect for the finished water meter is shown in Table 3.

The pressure transmitter is calibrated by inducing a pressure using a Fluke 700P04 pressure module and reading the corresponding mA DC output with a Fluke 702 calibrator for a five-point range. The Fluke Model 700P04 has a total uncertainty of 0.07 percent of the full scale for 1-year certification. Full scale of the Fluke 700P04 pressure module is 15 psi (415.6 inches of water). Thus, the uncertainty in the pressure differential measurement due to Fluke Model 700P04

pressure module would be ± 0.291 inches of water (i.e., ± 0.0007 times 415.6 inches of water) for finished water venturi meter. The uncertainty in the flow rate due to pressure module would then be:

$$CV_{Qa} = \frac{Xs_p}{\Delta h} = \frac{(0.5)(\pm 0.291in)}{12.56in} = \pm 1.16\% \qquad \textit{Equation (5)}$$

The current reading's uncertainty is reported as ± 0.025 percent of the reading ± 0.025 percent of the full scale for the Fluke 702 calibrator. The full scale of the Fluke 702 calibrator is 30.00 mA. Thus, the uncertainty in the current component of the calibrator would be ±0.025 percent of reading ± 0.0075 mA (i.e., ± 0.00025 times 30.00 mA) for the finished water venturi. The uncertainty in the flow rate due to the Fluke 702 calibrator would then be:

Equation (6)

$$CV_{Qa} = \pm 0.025\% \pm \frac{Xs_i}{\Delta i} = \pm 0.025\% \pm \frac{(1.0)(0.0075mA)}{9.60mA} = \pm 0.10\%$$

where s_i is an uncertainty due to the current reading for the calibrator pressure differential and Δi is the current differential. The current differential is linear to the flow rate with 4 mA corresponding to zero flow, and 20 mA corresponding to flow meter capacity, which is 60 MGD for the finished water meter Using this relationship, for the first hour on September 1, the corresponding current would be 9.60 mA. Note that for this calculation, the sensitivity coefficient, X, is 1.0 since the flow rate is directly proportional to the current (i.e., a linear relationship). A summary of these estimates appears in Table 3.

Table No. 3
Uncertainty From Pressure Transmitters and Calibration Equipment for the First Hourly Readings on September 1, 1999 for Venturi No. 1

Venturi	Instrument	Uncertainty Source	CV for Δh or ΔmA	URL or Calibrated Span	Uncertainty for Δh or ΔmA	CV for Flow (%)
Finished Water	Rosemount 1151DP	Pressure transmitter	± 0.2% of calibrated span	45.54 inches of water	± 0.091 inches of water	± 0.36
Finished Water	Rosemount 1151DP	Pressure transmitter	± 0.2% URL	150 inches of water	± 0.300 inches of water	± 1.20
Finished Water	Rosemount 1151DP	Pressure transmitter	± 1.0% of calibrated span/100 °F	45.54 inches of water	± 0.182 inches of water	± 0.73

Table No. 3
Uncertainty From Pressure Transmitters and Calibration Equipment for the First Hourly Readings on September 1, 1999 for Venturi No. 1

Venturi	Instrument	Uncertainty Source	CV for Δh or ΔmA	URL or Calibrated Span	Uncertainty for Δh or ΔmA	CV for Flow (%)
Finished Water	Fluke Model 700P04	Calibrator	± 0.07% FS	415.6 inches of water	± 0.291 inches of water	± 1.16
Finished Water	Fluke 702 Calibrator	Calibrator	± 0.025% of reading ± 0.025 % FS	30.00 mA	± 0.025% of reading ± 0.0075 mA	±0.10

In this study, the bias uncertainty estimates were broken down into three categories:

- Bias uncertainty with a known bias direction.
- Bias uncertainty with an unknown bias, but known to be in the same direction for each meter.
- Bias uncertainty with an unknown bias direction.

Explanation of this breakdown was detailed in *Technical Review of Lake Michigan Water Withdrawals by the City of Evanston*. Table 4 lists the type of bias uncertainty for each of the bias estimates for the first hourly readings for the finished water meter. Additionally, Table 4 also provides the absolute bias estimates for the first hourly readings based on the following equation:

$$s_b = CV_{flow} \cdot Q_{\substack{first \\ hour}} = (\pm 0.0151)(20.99\,MGD) = \pm 0.32\,MGD \qquad \textit{Equation (7)}$$

where S_b is the standard deviation (or absolute uncertainty) of the flow measurement due to the respective systematic uncertainty estimate, CV_{flow} is the relative uncertainty in the flow rate and $Q_{first\ hour}$ is the flow for the first hour.

Table 4
Absolute Bias Estimates for the First Hourly Readings
Taken on September 1, 1999

Venturi	Bias Component	Type of Bias	CV_b(%)	S_b (MGD)
Finished Water	Venturi			
	- *Manufacturer*	Direction unknown	± 0.50	± 0.10
	Approach lengths	Direction known	- 0.50	- 0.10
	Pressure transmitters			
	- *Accuracy*	Direction unknown	±0.36	± 0.08
	- *Stability*	Direction unknown	± 1.20	± 0.25
	- *Temperature*	Direction unknown	± 0.73	± 0.15
	Calibrator			
	- *Pressure*	Direction unknown	± 1.16	± 0.24
	- *Current*	Direction unknown	± 0.10	± 0.02

The systematic uncertainty estimates for meter No. 1 can be combined as shown below in *Equation (8)* to determine the overall hourly systematic uncertainty for September 1, 1999. To determine the overall hourly uncertainty, the individual uncertainty estimates should be combined on the basis of absolute uncertainty (i.e., standard deviations) and not relative uncertainty (i.e., coefficient of variation).

$$S_b = \Sigma S_{b_{\substack{direction \\ known}}} \pm \left[\left(\Sigma S_{b_{\substack{unknown \\ but\ in\ same \\ direction}}} \right)^2 + \Sigma S^2_{b_{\substack{direction \\ unknown}}} \right]^{\frac{1}{2}} \qquad \textit{Equation (8)}$$

Where $S_{b\ direction\ known}$ is an absolute bias uncertainty of known direction; $S_{b\ unknown\ but\ in\ same\ direction}$ is an absolute bias uncertainty of unknown direction, but known to occur in the same direction for each meter; and $S_{b\ direction\ unknown}$ is an absolute bias uncertainty of unknown direction.

For the first hour, using *Equation (8)*, the overall absolute bias uncertainty was found to be -0.10 ± 0.40 MGD, which corresponds to a relative uncertainty of -0.5 ± 1.92 percent (i.e., -0.10 ± 0.40 MGD divided by the total flow rate of 20.99 MGD). This process was repeated for each of the 24-hour readings taken during the day. The results are provided in Table 5.

(2) Random Error

Only the SCADA uncertainty was identified as being random in nature. The manufacturer states that the analog-to-digital conversion can take place with an uncertainty of ± 0.04 percent of the upper operating range. As mentioned earlier, it was assumed that the upper operating range refers to the range of the venturi-type meter. Thus, the finished water meter with a capacity of ± 60 MGD, the absolute random uncertainty due to the SCADA system would be ± 0.024 MGD (± 0.0004 times 60 MGD). Hence, the relative uncertainty estimate for the SCADA system would be ± 0.11 percent (i.e., ± 0.024 MGD divided by 20.99 MGD).

(3) Combining Systematic and Random Errors

The systematic and random errors can be combined using the following methodology:

$$S_b = \sum S_{b_{\substack{direction \\ known}}} \pm \left[\left(\sum S_{b_{\substack{unknown \\ but\ in\ same \\ direction}}} \right)^2 + \sum S^2_{b_{\substack{direction \\ unknown}}} + \sum S_r^2 \right]^{\frac{1}{2}} \qquad \textit{Equation (9)}$$

where S_r is the absolute random uncertainty. Using *Equation (9)*, the overall uncertainty of the sum of the two flow measurements made in the first hour of September 1, 1999, is -0.10 ± 0.40 MGD, or -0.5 ± 1.92 percent.

This process is repeated for each of the 24-hour readings taken during the day and the results can be seen in Table 5. The average uncertainty, *CV*, of an hourly flow measurement performed on September 1 was -0.5 ± 1.83 percent. This implies that the 95-percent confidence interval, *CI*, for an hourly flow measurement would be -0.5 ± 3.79 percent (-0.5 ±[1.83 times 2.069]). Over the entire study period, the average uncertainty of an hourly flow measurement, *CV*, was found to be -0.5 ± 2.38 percent . The average 95-percent confidence interval of an hourly flow measurement, *CI*, would then be equal to -0.5 ± 4.66 percent (-0.5 ±[2.38 times 1.960]).

Table 5
Systematic, Random, and Overall Uncertainty Estimates for Hourly Flow Measurements Made on September 1, 1999

Hour	Total Flow (MGD)	CV_b (%)	S_b (MGD)	CV_r (%)	S_r (MGD)	Overall *CV* (%)
1	20.99	-0.5 ± 1.92	-0.10 ± 0.40	± 0.11	± 0.024	-0.5 ± 1.92
2	21.70	-0.5 ± 1.81	-0.11 ± 0.39	± 0.11	± 0.024	-0.5 ± 1.81

Table 5
Systematic, Random, and Overall Uncertainty Estimates for Hourly Flow Measurements Made on September 1, 1999

Hour	Total Flow (MGD)	CV_b (%)	S_b (MGD)	CV_r (%)	S_r (MGD)	Overall CV (%)
3	21.99	-0.5 ± 1.77	-0.11 ± 0.39	± 0.11	± 0.024	-0.5 ± 1.77
4	21.95	-0.5 ± 1.77	-0.11 ± 0.39	± 0.11	± 0.024	-0.5 ± 1.77
5	21.69	-0.5 ± 1.81	-0.11 ± 0.39	± 0.11	± 0.024	-0.5 ± 1.81
6	20.77	-0.5 ± 1.96	-0.10 ± 0.41	± 0.12	± 0.024	-0.5 ± 1.96
7	20.00	-0.5 ± 2.11	-0.10 ± 0.42	± 0.12	± 0.024	-0.5 ± 2.11
8	20.01	-0.5 ± 2.10	-0.10 ± 0.42	± 0.12	± 0.024	-0.5 ± 2.10
9	20.00	-0.5 ± 2.11	-0.10 ± 0.42	± 0.12	± 0.024	-0.5 ± 2.11
10	21.38	-0.5 ± 1.86	-0.11 ± 0.40	± 0.11	± 0.024	-0.5 ± 1.86
11	21.50	-0.5 ± 1.84	-0.11 ± 0.40	± 0.11	± 0.024	-0.5 ± 1.84
12	21.49	-0.5 ± 1.84	-0.11 ± 0.40	± 0.11	± 0.024	-0.5 ± 1.84
13	21.50	-0.5 ±1.84	-0.11 ± 0.40	± 0.11	± 0.024	-0.5 ±1.84
14	21.49	-0.5 ± 1.84	-0.11 ± 0.40	± 0.11	± 0.024	-0.5 ± 1.84
15	21.50	-0.5 ± 1.84	-0.11 ± 0.40	± 0.11	± 0.024	-0.5 ± 1.84
16	21.50	-0.5 ± 1.84	-0.11 ± 0.40	± 0.11	± 0.024	-0.5 ± 1.84
17	21.49	-0.5 ± 1.84	-0.11 ± 0.40	± 0.11	± 0.024	-0.5 ± 1.84
18	21.50	-0.5 ± 1.84	-0.11 ± 0.40	± 0.11	± 0.024	-0.5 ± 1.84
19	21.50	-0.5 ± 1.84	-0.11 ± 0.40	± 0.11	± 0.024	-0.5 ± 1.84
20	21.50	-0.5 ± 1.84	-0.11 ± 0.40	± 0.11	± 0.024	-0.5 ± 1.84
21	21.58	-0.5 ± 1.83	-0.11 ± 0.39	± 0.11	± 0.024	-0.5 ± 1.83
22	24.03	-0.5 ± 1.50	-0.12 ± 0.36	± 0.10	± 0.024	-0.5 ± 1.50
23	24.00	-0.5 ± 1.51	-0.12 ± 0.36	± 0.10	± 0.024	-0.5 ± 1.51
24	24.00	-0.5 ± 1.51	-0.12 ± 0.36	± 0.10	± 0.024	-0.5 ± 1.51

B. Uncertainty of Daily Volume Measurements

An estimate of the uncertainty of the daily volume pumped through the station can be obtained from the 24 hourly flow measurements. The volume pumped through the CLCJAWA Facility is the average of the 24 hourly flow measurements times 1 day. For September 1, 1999, the average volume pumped through the station is 21.6 million gallons (MG).

The uncertainty of the systematic daily volume measurements can be determined using the following equation:

$$CV_{Vb} = CV_{bV_{\substack{direction \\ known}}} \pm \frac{\Delta t}{m_V}\left(\sum_{i=1}^{n} Q_i^2 CV^2_{bi_{\substack{direction \\ unknown}}} + \left(\sum_{i=1}^{n} Q_i CV_{bi_{\substack{unknown \\ but\ in\ same \\ direction}}}\right)^2\right)^{\frac{1}{2}} \qquad \textit{Equation (10)}$$

Where CV_{Vb} is the relative uncertainty of the total bias volume measurement, $CV_{bV\ direction\ known}$ is the bias with known direction of the total bias volume measurement, $CV_{bi\ direction\ unknown}$ is the bias error in individual flow measurement i where bias direction is unknown, $CV_{bi\ unknown\ but\ in\ the\ same\ direction}$ is the bias error in individual flow measurement i where bias direction is unknown but in the same direction for all meters, Δt is the time increment, Q_i is the value of flow measurement i, and m_v is the sum of all n volume measurements or 519 MG for September 1, 1999.

Using *Equation (10)*, the relative systematic error, CV_{Vb}, -0.5 ± 0.37 percent for September 1, 1999.

The average random uncertainty component for the daily volume can be obtained from the following expression:

$$CV_{Vr} = \pm \frac{\Delta t}{m_v}\left(\sum_{i=1}^{n} Q_i^2 CV_{ri}^2\right)^{\frac{1}{2}} \qquad \textit{Equation (11)}$$

where CV_{vr} is the relative random uncertainty of the daily volume measurement and CV_{ri} is the relative random uncertainty of the ith hourly flow measurements. Using *Equation (11)*, the relative random uncertainty of the daily volume, CV_{vr}, for September 1, 1999, is ± 0.023 percent.

The overall uncertainty of the daily volume can then be found by combining the systematic and random uncertainty components in the following manner:

$$CV_V = CV_{bV_{\substack{direction \\ known}}} \pm \frac{\Delta t}{m_V}\left(\sum_{i=1}^{n} Q_i^2 CV^2_{bi_{\substack{direction \\ unknown}}} + \left(\sum_{i=1}^{n} Q_i CV_{bi_{\substack{unknown \\ but\ in\ same \\ direction}}}\right)^2 + \sum_{i=1}^{n} Q_i^2 CV_{ri}^2\right)^{\frac{1}{2}} \qquad \textit{Equation (12)}$$

For the date in question, the overall uncertainty of the daily volume, CV_v, was found to be -0.5 ± 0.37 percent, or -0.04 ± 1.92 MG (-0.5 ± 0.37 percent times 519 MG). The 95-percent confidence interval on the daily volume, CI_v, would then be -0.5 ± 0.77 percent (-0.5 ±[0.37 times 2.069]). Note that the 95-percent confidence interval for the daily volume (-0.5 ± 0.77 percent) is much narrower than the 95-percent confidence interval for the hourly flow measurement (-0.5 ± 3.79 percent). This is because the random errors and systematic errors with unknown direction associated with an hourly flow measurement are statistically canceled when they are summed over a day's time. The average random, systematic, and overall uncertainty for each day in each 2-week study period were found using the above method. A summary of the daily volume uncertainties for the September 1999 study period appears in Table 6.

Table 6
Estimated Uncertainties for Daily Volumes in September 1999 Study Period

Date	CV_{Vb} (%)	CV_{Vr} (%)	CV_V (%)	CI_V (%)
September 1	-0.5 ± 0.37	± 0.02	-0.5 ± 0.37	-0.5 ± 0.77
September 2	-0.5 ± 0.40	± 0.02	-0.5 ± 0.40	-0.5 ± 0.82
September 3	-0.5 ± 0.25	± 0.02	-0.5 ± 0.25	-0.5 ± 0.51
September 4	-0.5 ± 0.29	± 0.02	-0.5 ± 0.29	-0.5 ± 0.61
September 5	-0.5 ± 0.31	± 0.02	-0.5 ± 0.31	-0.5 ± 0.65
September 6	-0.5 ± 0.31	± 0.02	-0.5 ± 0.31	-0.5 ± 0.65
September 7	-0.5 ± 0.32	± 0.02	-0.5 ± 0.32	-0.5 ± 0.66
September 8	-0.5 ± 0.32	± 0.02	-0.5 ± 0.32	-0.5 ± 0.67
September 9	-0.5 ± 0.36	± 0.02	-0.5 ± 0.36	-0.5 ± 0.75
September 10	-0.5 ± 0.42	± 0.02	-0.5 ± 0.43	-0.5 ± 0.88
September 11	-0.5 ± 0.30	± 0.02	-0.5 ± 0.30	-0.5 ± 0.62
September 12	-0.5 ± 0.34	± 0.02	-0.5 ± 0.34	-0.5 ± 0.70
September 13	-0.5 ± 0.50	± 0.03	-0.5 ± 0.50	-0.5 ± 1.04
September 14	-0.5 ± 0.51	± 0.03	-0.5 ± 0.51	-0.5 ± 1.06

C. Uncertainty of Annual Volume Measurements

Using the estimated uncertainty in daily volume measurements, the uncertainty in the annual volume pumped through the facility can be estimated. As mentioned earlier, the study period consisted of 2-week periods in September 1999, and February and May of 2000. In total, there were 42 days in the study period. Over this time period, the average systematic uncertainty for a daily volume measurement,

CV_b, was determined to be -0.50 ± 0.48 percent (-0.50 percent from known biases, ±0.48 percent from unknown biases and zero percent from unknown biases known to be in the same direction for all meters) and the average random uncertainty for a daily volume measurement, CV_r, was estimated to be ±0.03 percent. The average uncertainty in daily volume would then be -0.50 ± 0.48 percent, and the average 95-percent confidence interval for the daily volume would be -0.50 ± 0.99 percent. The uncertainty in the annual volume pumped through the CLCJAWA Facility, CV_V can be determined as follows:

$$CV_V = CV_{b_{\substack{direction \\ known}}} \pm \left(\frac{CV^2_{b_{\substack{direction \\ unknown}}}}{n} + CV^2_{b_{\substack{unknown \\ but\ in\ same \\ direction}}} + \frac{CV_r^2}{n} \right)^{\frac{1}{2}}$$

$$= -0.50 \pm \left(\frac{1.94^2}{365} + 0.10^2 + \frac{0.03^2}{365} \right)^{\frac{1}{2}} = -0.50 \pm 0.10\%$$

Equation (13)

The 95-percent confidence interval of the annual volume, CI_v, would then simply be -0.50 ± 0.04 percent (–.50 ± [0.02 times 1.960]). The 95-percent confidence interval for the annual volume (-0.50 ± 0.04 percent) is less than the 95-percent confidence interval for the daily volume (-0.50 ± 0.99 percent). Most of the random error and unknown bias error associated with the daily volume measurement is statistically cancelled when determining the uncertainty of the annual volume.

4. Quality Assurance

If the water accounting system is moved to the lakefront, there is concern that if one of the direct diverter's flow measurement systems goes down, that there would be no way to measure the withdrawals from the lake. Thus, it is desirable that the direct diverters have a back-up measurement system and, if possible, some other independent check on the measurements to ensure that the measurements are reasonable and accurate.

There is no back-up finished water meter should the 36-inch venturi fail. However, flows through the raw water meters, influent plant meters, and recycle meter are transmitted to the facility's control room and recorded hourly; and could be used to determine the Lake Michigan withdrawals should the finished water meter fail.

The SCADA system has an uninterrupted power source and the CLCJAWA Facility is equipped with a power generator. Therefore, loss of data is not expected due to a power outage. Should the SCADA system fail, data would not be lost since the facility is manned 24-hours a day. If the operators notice a problem with the SCADA's data collection, they can collect the data manually, until the problems with the SCADA can be resolved.

5. Summary of Inadequacies in the Current Metering Systems

For the most part, the current metering system provided a reasonable level of accuracy and has acceptable quality assurance. There are few areas of the metering system that appear deficient.

- The actual venturi meter is not calibrated. Rather the CLCJAWA assumes the manufacturer's rating curve is correct. Calibration of the venturi would confirm or deny this assumption.

- The overall accuracy in estimating the water supply pumpage is dependent upon many measurement and analysis functions. The documented technical review and much previous work were focused on the accuracy of the pumpage measurements in hardware (i.e., meters, calibrator, pressure transmitter, etc.) and software (SCADA, etc.). This analyses does not take into account procedural errors such as inconsistent data in water supply pumpage as a result of the reporting mechanism.

6. Recommendations for Long-Term QA/QC and Improvements to Metering

Recommendations for long-term QA/QC and improvements to metering are as follows:

- Calibration of venturi meters to determine if the manufacturer's rating curves are valid.
- Routine auditing of various water withdrawal reports, as part of the long-term QA/QC, as a means of accounting for procedural errors.

7. Conclusions

Some of the important conclusions are summarized below:

- For operational purposes, the City can determine the hourly flow measurement reading to within -0.50 ± 4.66 percent at the CLCJAWA Facility. This value takes into account the random and systematic uncertainty associated with the venturi meters, pressure transmitters, calibration equipment, and recording system.

- On an annual basis, the total volume pumped through the facility can be determined to within -0.50 ± 0.04 percent. The 95-percent confidence interval for the annual volume is narrower than the 95-percent confidence interval for the hourly flow measurements made at the CLCJAWA Facility because the random and unknown bias errors associated with the measurement are statistically canceled when the measurements are summed over a year's time.

- With the exception of the SCADA system, all of the metering system has redundancy or backup for quality assurance. There is no back-up data recorder at this time; however, since the plant is manned 24-hours a day, data can be recorded manually, if necessary.

- The raw water, influent, and recycle meters can be used as an independent check of the finished water flow measurement to determine if there is a problem within the measurement system.

References

American Society of Mechanical Engineers, *Fluid Meters: Their Theory and Application*. ASME, New York, 6th ed., 1971.

"Analog 4 Ch. In / 2Ch.Out Module Base w/24 VDC I/O pts" [SCADA Specifications], no date.

Cheremisinoff, Nicholas P. and Paul N. Cheremisinoff. *Flow Measurements for Engineers and Scientists*. Marcel Dekker, Inc., New York, 1888.

Fluke Corporation, *Fluke 700 Series Pressure Modules Instruction Sheet*, July 1994.

Fluke Corporation, *Fluke 701/702 Documenting Process Calibrators*, no date.

Hutton, Stanley P, *The Prediction of Venturi-Meter Coefficients and Their Variation with Roughness and Age*.

International Organization for Standardization, *Measurements of Fluid Flows by Means of Pressure Differential Devices*, ISO, Switzerland, 1991.

Mead & Hunt, Inc., *Technical Review of Lake Michigan Water Withdrawals by the City of Evanston – Draft*, July 2002.

Miller, Richard W., *Flow Measurement Engineering Handbook*, McGraw-Hill, New York, 1996.

Primary Flow Signal, Inc., Order Specification Sheet, August 7, 1990

Rosemount Inc., *Model 1151 Smart Pressure Transmitters*, October 1990.

Spitzer, David W., *Industrial Flow Measurement*. Instrument Society of America, North Carolina, 1990.

Final Report

Technical Review of Lake Michigan Withdrawals Evanston Water Treatment Plant

Evanston, Illinois

Prepared for:

U.S. Army Corps of Engineers – Chicago District
Chicago, Illinois

Prepared by:

MEAD & HUNT

August 2003

Table of Contents

Page

Executive Summary . . . . . E-i

1. Introduction 1

2. Accuracy of Flow and Volume Measurements 2
   A. Random and Systematic Errors 2
   B. Uncertainty for a Sum of Measurements 5
   C. Uncertainty in Measured Volumes 6

3. General Description 10
   A. Summary of Operation 10
   B. Raw-Water Flow Measurement 11
   C. Flow Totalization 13
   D. Calibration 13
      (1) Wet Calibration 13
      (2) Dry Calibration 13
      (3) The City of Evanston's Calibration Procedure 14

4. Uncertainty in Metering and Measurement Components 15
   A. Badger Meter Lo-Loss Flow Tube 15
   B. BIF Dall Flow Tubes 15
   C. Rapid Drawdown 16
   D. Pressure Taps 16
   E. Meter Installation 16
   F. Sampling 19
   G. Pressure Differential Measurement 19
   H. Dry Calibration of Pressure Transmitter 20

5. Sample Uncertainty Calculations 22
   A. Uncertainty of Hourly Flow Measurements for Raw-water Meters 22
      (1) Systematic (Bias) Error 22
      (2) Random Error 28
      (3) Combining Systematic and Random Errors 28
   B. Uncertainty of Daily Volume Measurements for Raw-Water Meter 30
   C. Daily Uncertainty of Plant Use Components 32
   D. Adjusted Raw-Water Uncertainty 34
   E. Uncertainty of Annual Volume Measurements 34

6. Quality Assurance 36

7. Summary of Inadequacies in the Current Metering Systems 37

8. Recommendations for Long-Term QA/QC and Improvements to Metering 38

9. Conclusions 39

References 40

Appendix

A Schematic of the Evanston Water Treatment Plant

B Systematic and Random Uncertainties of the Plant Use Components for January 1998

List of Tables

Table		Page
1	Flow Measurement Devices Used at the Evanston Plant	12
2	Upstream Disturbances and Approximate Approach Lengths for the Various Venturi Meters at the Evanston Plant	17
3	Summary of Required and Actual Downstream Straight Pipe Lengths at the Evanston Plant	18
4	Uncertainty From the Pressure Transmitter and Calibration Equipment for the First Hourly Reading on February 17, 1997, for the 60-Inch Raw-Water Meter	25
5	Absolute Bias Estimates for the First Hourly Readings Taken on February 17, 1997	27
6	Systematic, Random, and Overall Uncertainty Estimates for the 60-inch Raw Water Meter's Hourly Flow Measurements Made on February 17, 1997	29
7	Estimated Uncertainties for the 60-inch Raw-water Meter's Daily Volumes in the February 1997 Study Period	32
8	Accuracy and Specifications of Plant Use Components	33

Executive Summary

Currently, diversion of water from Lake Michigan for the state of Illinois is measured at the Chicago Sanitary and Ship Canal at Romeoville. The Great Lakes Mediation Memorandum of Understanding established a lakefront diversion accounting system and specified a 3-year transition period to assess the technical acceptability of moving the diversion measurement system to the lakefront. A lakefront diversion accounting system requires metering of all domestic water withdrawals from Lake Michigan and the direct diversions into the Chicago Sanitary and Ship Canal system at the Chicago River, the Calumet River, and the North Shore Channel at Wilmette. During the 3-year transition period, the U.S. Army Corps of Engineers (USACE) has been tasked to initiate a technical review of the accuracy of the reported domestic withdrawals from Lake Michigan.

The USACE retained Mead & Hunt, Inc. to evaluate the accuracy of domestic withdrawals from Lake Michigan. A total of 12 pumping stations in the city of Chicago and six suburban pumping stations will be evaluated. These evaluations include revisions to the investigations conducted on the city of Chicago's Mayfair and Thomas Jefferson Pumping Stations and the city of Evanston's (City) Water Treatment Plant by the Illinois District of the U.S. Geological Survey. This report presents a summary of the flow measurement techniques at the Evanston Plant as employed by the City, as well as estimates of the uncertainty of daily and annual volume measurements. Presently, the City measures the water pumped from Lake Michigan, or "raw" water, using two venturi-type meters. Some of the water is used for plant use to backwash the filters. This plant use water is then returned to the system upstream of the raw-water meters, so this returned water is actually measured twice. The return plant use water is measured either volumetrically or by venturi-type meters. This plant use water volume is then subtracted from the daily volume measured by the raw-water meters for an estimate of the actual amount of water removed from Lake Michigan.

To obtain an estimate of the uncertainty of an individual flow measurement, we examined the manufacturer's accuracy specifications for both the primary flow measurement devices (i.e., the venturi-type meters) and secondary measurement devices (i.e., the pressure transmitters). The Evanston Plant's calibration technique, sampling technique, and device installation were also examined. All of the sources of uncertainty identified from this analysis were then classified as either random or systematic in nature. Using this information and the data logs provided by the City, we obtained an estimate of the uncertainty of an individual flow measurement. From this information, an estimate of the uncertainty of the daily and annual volume withdrawn from the lake can be obtained using standard statistical techniques.

Some of the important conclusions are summarized below:

- For operational purposes, the City can determine an individual adjusted raw-water flow measurement to within about ± 3.67 percent. This takes into account the random and systematic uncertainty associated with the raw-water meters, plant use meters, pressure transmitter, and calibration unit.

- On an annual basis, the total volume withdrawn from the lake can be determined to within approximately ± 0.41 percent. The bias with unknown direction but known to be in the same direction dominates the overall magnitude of 95-percent confidence interval for the annual volume, while the errors that can statistically cancel (i.e., random error and bias errors with unknown direction) provide only a small contribution.

- Because the amount of plant use water is small compared to the raw water, the accuracy of the plant use meters has very little impact on the overall accuracy of the adjusted raw-water measurement.

- The City uses two different methods for calculating the flow. The pressure transmitter and remote terminal unit (RTU) system comprise the primary method. The pressure transmitter, discriminator, summator, and totalizer system comprise the secondary method. The primary method is more accurate than the secondary one. However, the secondary method can be used as an effective backup should a problem develop with the primary method.

- The finished-water meters (outflow from the plant) can be used as a check on the raw-water measurement system (inflow to the plant). The difference between these two meters should be the amount of returned plant use water plus the amount of water lost to the system. Normally, this difference should be around 1 to 2 percent. A difference greater than about 2 percent indicates that there may be a problem with one of the flow measurement systems.

Technical Review of
Lake Michigan Withdrawals
Evanston Water Treatment Plant
City of Evanston, Illinois

1. Introduction

Currently, diversion of water from Lake Michigan for the state of Illinois is measured at the Chicago Sanitary and Ship Canal at Romeoville. The Great Lakes Mediation Memorandum of Understanding established a lakefront diversion accounting system and specified a 3-year transition period to assess the technical acceptability of moving the diversion measurement system to the lakefront. A lakefront diversion accounting system requires metering of all domestic water withdrawals from Lake Michigan and the direct diversions into the Chicago Sanitary and Ship Canal system at the Chicago River, the Calumet River, and the North Shore Channel at Wilmette. During the 3-year transition period, the U.S. Army Corp of Engineers (USACE) has been tasked to initiate a technical review of the accuracy of the reported domestic withdrawals from Lake Michigan.

The USACE retained Mead & Hunt, Inc. to take the lead in the evaluation of the accuracy of domestic withdrawals from Lake Michigan. This report is a review of the measuring methods used by the City, which is the largest north shore pumping station and is a revision of the April 1995 *Technical Review of Lake Michigan Water Withdrawals by the City of Evanston* report prepared by the U.S. Geological Survey. This review of the measuring methods is designed to estimate the uncertainty of individual flow measurements made by the City. This uncertainty will have both random, and systematic or bias, components. From this information, an estimate of the uncertainty of the total volume of water withdrawn from the lake can be determined using standard statistical procedures.

The analysis is based on meter accuracy specifications provided by the manufacturer, the sampling technique employed by the City, and the physical installation configuration of the meters. It is beyond the scope of this report to provide a detailed analysis of the accuracy of the primary flow measurement devices and their secondary attachments (i.e., pressure transmitters, calibration units, etc.). Thus, it is assumed that the manufacturers' specifications on the accuracy of these devices are valid. This assumption is supported by the experiences of many users.

2. Accuracy of Flow and Volume Measurements

A. Random and Systematic Errors

Any measurement of the flow rate or volume will have an uncertainty associated with it, regardless of the measurement method used. This uncertainty has both random and systematic components. Random errors are generally assumed to be normally distributed. The impact of random errors on a measurement can be reduced if numerous measurements are taken, because the total random error of the summed values approaches zero if the sample size is large. This is not true about systematic errors. Systematic errors in the measurement are consistently either positive or negative in nature and considered bias in measurements. Repeated measurements will not reduce the impact of systematic errors. Sometimes it is assumed that the systematic errors are constant for one instrument, but vary among different instruments. Thus, if a measurement is made with many different instruments, this particular systematic error can be treated as a normally distributed random error. In the case of this study, the direction of some systematic errors may be known. Further, some systematic error's direction may not be known, but the error is known to be in the same direction for more than one meter. An example of this would be if several meters are calibrated with the same calibration equipment. The systematic error for the calibration equipment will have an unknown bias direction; however, this error will be in the same direction for all the meters calibrated with this equipment.

For this analysis, the systematic errors will be separated into three categories: bias with unknown direction, bias with unknown direction but known to be in the same direction for multiple meters, and bias with a known direction. These categories will determine how the errors will be combined to determine the overall uncertainty of the meter and the system. For the uncertainty of *an individual meter*, unknown direction systematic errors and unknown systematic errors that are known to be in the same direction for several meters can be treated as normally distributed random errors and can be combined, along with any random errors, using the root-mean-square (RMS) method. Any systematic errors with a *known bias direction* are then added linearly to this RMS, as shown in *Equation (1)*.

$$S_c = \sum_{i=1}^{l_1} S_{b_i\,\text{direction known}} \pm \left[\sum_{i=1}^{l_2} S^2_{b_i\,\text{direction unknown}} + \left(\sum_{i=1}^{l_3} S_{b_i\,\text{unknown but in same direction}} \right)^2 + \sum_{i=1}^{l_4} S^2_{r_i} \right]^{\frac{1}{2}} \qquad \textit{Equation (1)}$$

Where:

$S_{bi\ direction\ known}$	=	Absolute bias uncertainty of known direction
$S_{bi\ direction\ unknown}$	=	Absolute bias uncertainty of unknown direction
$S_{bi\ unknown\ but\ in\ same\ direction}$	=	Absolute bias uncertainty of unknown direction but known to occur in the same direction for each meter
S_{ri}	=	Absolute random uncertainty
S_c	=	Combined uncertainty
I_1, I_2, I_3, I_4	=	The number of uncertainty components in $S_{bi\ direction\ known}$, $S_{bi\ direction\ unknown}$, $S_{bi\ unknown\ but\ in\ same\ direction}$ and S_{ri}, respectively.

Equation (1) is not valid for determining the uncertainty *when the flow is split between several lines and meters.* In this case, the biases with unknown direction can still be combined with the random errors using the RMS method, but each of the different biases with unknown direction but known to be in the same direction for several meters, must first be added together linearly and then combined with the random and bias errors with unknown direction using the RMS method. The systematic errors with known bias direction then are added linearly to this result as shown in *Equation (2).*

$$S_c = \sum_{i=1}^{I_1}\sum_{j=1}^{m} S_{b_{ij\ \substack{direction\\known}}} \pm \left[\sum_{i=1}^{I_2}\sum_{j=1}^{m} S^2_{b_{ij\ \substack{direction\\unknown}}} + \sum_{i=1}^{I_3}\left(\sum_{j=1}^{m} S_{b_{ij\ \substack{unknown\\but\ in\ same\\direction}}}\right)^2 + \sum_{i=1}^{I_4}\sum_{j=1}^{m} S^2_{r_{ij}}\right]^{\frac{1}{2}} \qquad \textit{Equation (2)}$$

Where:

m	=	The number of meters
S_c	=	Combined uncertainty or standard deviation of the flow measurement
$S_{bij\ direction\ known}$	=	Absolute bias uncertainty of known direction for measurement *i,j*
$S_{bij\ unknown\ but\ in\ same\ direction}$	=	Absolute bias uncertainty of unknown direction but known to occur in the same direction for each meter for measurement *i,j*
$S_{bij\ direction\ unknown}$	=	Absolute bias uncertainty of unknown direction for measurement *i,j*
S_{rij}	=	Absolute random uncertainty for measurement *i,j.*

By letting the absolute uncertainty for single measurements be:

$$S_{b_{\substack{direction\\known}}} = \sum_{i=1}^{I_1}\sum_{j=1}^{m} S_{b_{ij\ \substack{direction\\known}}}$$

$$S^2_{b_{\substack{direction\\unknown}}} = \sum_{i=1}^{I_2}\sum_{j=1}^{m} S^2_{b_{ij\ \substack{direction\\unknown}}}$$

$$S^2_{b_{\substack{unknown\\ but\ in\ same\\ direction}}} = \sum_{i=1}^{l_3}\left(\sum_{j=1}^{m} S_{b_{ij\ \substack{unknown\\ but\ in\ same\\ direction}}}\right)^2$$

$$S_r^2 = \sum_{i=1}^{l_4}\sum_{j=1}^{m} S^2_{r_{ij}}$$

Equation (2) can be rewritten as:

$$S_c = S_{b_{\substack{direction\\ known}}} \pm \left[S^2_{b_{\substack{direction\\ unknown}}} + S^2_{b_{\substack{unknown\\ but\ in\ same\\ direction}}} + S_r^2\right]^{\frac{1}{2}} \qquad \textit{Equation (3)}$$

The flow through a venturi-type meter depends on the differential pressure across the meter. This differential pressure can be measured through a variety of devices such as a manometer or a pressure transmitter. No matter how the differential pressure is measured, this measurement will always have some sort of uncertainty associated with it. How the uncertainty of a pressure differential affects the uncertainty of the actual flow measurement can be expressed through sensitivity coefficients. In other words, the sensitivity coefficients express the relationship of how the error generated by a secondary measurement device affects the primary flow measurement (Spitzer, 1990). Because the flow through a venturi-type meter is a function of the square root of the pressure differential, the sensitivity coefficient for the pressure differential will be one-half. This is not the case, however, for the device that reads the amperage output from the pressure transmitter and converts it to a flow rate. In this case, the relationship between the amperage and the flow rate is linear, thus making the sensitivity coefficient equal to one. In terms of sensitivity coefficients, the combined uncertainty of the flow measurement, S_c, can also be expressed as:

$$S_c = \sum_{i=1}^{l_1}\sum_{j=1}^{m} X_{ij} S_{b_{ij\ \substack{direction\\ known}}} \pm \left[\sum_{i=1}^{l_2}\sum_{j=1}^{m}\left(X_{ij} S_{b_{ij\ \substack{direction\\ unknown}}}\right)^2 + \sum_{i=1}^{l_3}\left(\sum_{j=1}^{m} X_{ij} S_{b_{ij\ \substack{unknown\\ but\ in\ same\\ direction}}}\right)^2 + \sum_{i=1}^{l_4}\sum_{j=1}^{m}\left(X_{ij} S_{r_{ij}}\right)^2\right]^{\frac{1}{2}} \qquad \textit{Equation (4)}$$

Where:

X_{ij} = Sensitivity coefficient for measurement *i,j*

In many cases, it is more informative to present the uncertainty in relative terms rather than in absolute terms. This can be done using the coefficient of variation, *CV*, which is a dimensionless measure of the relative variation of a measurement. The coefficient of variation is defined as the standard deviation of measurement error, S_c, divided by the average value of the measurement, *m*.

$$CV = \frac{S_c}{m} \qquad \textit{Equation (5)}$$

Confidence intervals (*CI*) are a standard statistical expression for the uncertainty of a single measured or computed value. A confidence interval defines the range in which we would expect to find the value of the parameter of interest. For example, a 95-percent confidence interval defines a range for a parameter within which we are 95-percent certain that the true value of the parameter lies within a stated interval. Here, the approximate 95-percent confidence interval is defined as ± 2 standard deviations from the mean, regardless of the distribution type. For a normal distribution, this is a good approximation. For distributions other than normal, ± 2 standard deviations will represent a confidence interval slightly different than 95 percent. In terms of the coefficient of variation, the approximate 95-percent confidence interval can be expressed as:

$$CI = \pm 2CV \qquad \textit{Equation (6)}$$

To obtain a more accurate confidence interval, the t-distribution should be used. When using this distribution, the constant (i.e., 2 in *Equation [6]*) that CV is multiplied by will change depending on the sample size. For instance, in this study, the sample size is often 24 since often there are 24, 1-hour readings being analyzed. Based on the t-distribution, CV should be multiplied by 2.069 for a sample size of 24. This multiplier decreases to 1.98 for 121 samples and 1.96 for infinite samples. Therefore, for any instances in this study that have a sample size greater than 121, a 1.96 multiplier will be assumed. Below 121 samples, the multiplier will be taken from the t-distribution.

B. Uncertainty for a Sum of Measurements

When combining individual uncertainty measurements, either using the RMS method or linear addition, the standard deviation of the individual measurements should be combined and not the coefficient of variation of the individual measurements. One can readily show that the coefficient of variation of the individual measurements cannot be used to find the coefficient of variation of the sum of the two measurements in this same way. This is because the coefficient of variation does not take into the account the absolute magnitude of the measurement on the overall uncertainty. If the two measurements are similar in magnitude, then this is not really a problem. However, if the two measurements are drastically different in magnitude, then this becomes more of a problem. For example, assume the first measurement, m_1, is 1 million gallons per day (MGD) with an uncertainty, s_1, of 0.5 MGD and that the second measurement, m_2, is 100 MGD with an uncertainty, s_2, of 0.5 MGD. The relative uncertainty for the first measurement, CV_1, is 50 percent, while the relative uncertainty for the second measurement, CV_2, is 0.5 percent. The sum of the two measurements is 101 MGD. Using the

RMS method, the combined uncertainty, s_c, is 0.71 MGD and the relative uncertainty of the combined measurement, CV_c, is 0.7 percent (i.e., 0.71 divided by 101). If calculated in terms of relative uncertainty, then combined uncertainty would be 50 percent (i.e., square root of $50^2 + 0.5^2$). This is obviously incorrect because it does not take into account the magnitude of the individual measurements. The high uncertainty of the small measurement, in reality, has little impact on the uncertainty of the sum of the two measurements.

C. Uncertainty in Measured Volumes

The total volume that passes through a given meter over a time period T can be expressed by:

$$V_t = \Delta t \sum_{k=1}^{n} Q_k \qquad \textit{Equation (7)}$$

Where:

V_t	=	Total volume for time period T
Δt	=	Constant time increment
Q_k	=	Average flow rate at time increment k
n	=	Number of flow measurements in time period T

Using *Equation (3)* and assuming there is no error in the time interval, the uncertainty of the total volume, s_V, can be expressed as:

$$S_V = \Delta t \sum_{k=1}^{n} S_{b_k\,\text{direction known}} \pm \left[\Delta t^2 \sum_{k=1}^{n} S^2_{b_k\,\text{direction unknown}} + \left(\Delta t \sum_{k=1}^{n} S_{b_k\,\text{unknown but in same direction}} \right)^2 + \Delta t^2 \sum_{k=1}^{n} S^2_{r_k} \right]^{\frac{1}{2}} \qquad \textit{Equation (8)}$$

Dividing *Equation (8)* by the sum of all the measured volumes, m_V, yields:

Equation (9)

$$\frac{S_V}{m_V} = \frac{S_{b_V\,\text{direction known}}}{m_V} \pm \frac{\Delta t \left(\sum_{k=1}^{n} S^2_{b_k\,\text{direction unknown}} + \left(\sum_{k=1}^{n} S_{b_k\,\text{unknown but in same direction}} \right)^2 + \sum_{k=1}^{n} S^2_{r_k} \right)^{\frac{1}{2}}}{m_V}$$

Where:

$S_{V\ direction\ known}$	=	Absolute bias with known direction of the total volume measurement

In terms of relative uncertainty, *Equation (9)* can be expressed as:

$$CV_V = CV_{bV_{\substack{direction\\known}}} + \frac{\Delta t}{m_v}\left(\sum_{k=1}^{n} Q_k^2 CV_{b_{k_{\substack{direction\\unknown}}}}^2 + \left(\sum_{k=1}^{n} Q_k CV_{b_{k_{\substack{unknown\\but\ in\ same\\direction}}}}}\right)^2 + \sum_{k=1}^{n} Q_k^2 CV_{r_k}^2\right)^{\frac{1}{2}} \qquad \textit{Equation (10)}$$

Where:

CV_V	=	Relative uncertainty of the total volume measurement
$CV_{bV\ direction\ known}$	=	Bias with known direction of the total volume measurement
CV_{rk}	=	Random error in individual flow measurement *i*
$CV_{bk\ direction\ unknown}$	=	Bias error in individual flow measurement k where the bias direction is unknown
$CV_{bk\ unknown\ but\ in\ same\ direction}$	=	Bias error in individual flow measurement *k* where the bias direction is unknown, but in the same direction for all meters
Δt	=	Time increment
Q_k	=	Value of flow measurement *k*
m_V	=	Sum of all *n* volume measurements. In this case, the uncertainty of the measured volume can be expressed in relative terms because the terms Q_k and m_V take into account the magnitude of the individual measurements.

If all the individual flow measurements, Q_k, are equal and all the estimated systematic uncertainties for each Q_k are equal, then the systematic uncertainty for an individual measurement, CV_b, will equal the systematic uncertainty for the volume, CV_{bV}. The total uncertainty for the volume can then be expressed as:

$$CV_V = CV_{bV_{\substack{direction\\known}}} + \frac{\Delta t}{m_v} Q_k \left(\sum_{k=1}^{n} CV_{b_{k_{\substack{direction\\unknown}}}}^2 + \left(\sum_{k=1}^{n} CV_{b_{k_{\substack{unknown\\but\ in\ same\\direction}}}}}\right)^2 + \sum_{k=1}^{n} CV_{r_k}^2\right)^{\frac{1}{2}} \qquad \textit{Equation (11)}$$

Again, if all the individual flow measurements, Q_k, are equal, then the following expression is true:

$$\frac{m_V}{\Delta t} = nQ \qquad \textit{Equation (12)}$$

Where:

Q = Average flow rate

If the estimated random uncertainties of each individual measurement are also equal, *Equation (12)* can be substituted into *Equation (11)* to yield:

$$CV_V = CV_{b_{\substack{direction\\known}}} + \frac{Q_k}{nQ}\left(nCV^2_{b_{\substack{direction\\unknown}}} + n^2CV^2_{b_{\substack{unknown\\but\ in\ same\\direction}}} + nCV_r^2\right)^{\frac{1}{2}}$$

Equation (13)

Where:

CV_r = Estimated random uncertainty of an individual flow measurement.

Equation (13) can be simplified to yield the following:

$$CV_V = CV_{b_{\substack{direction\\known}}} + \left(\frac{CV^2_{b_{\substack{direction\\unknown}}}}{n} + CV^2_{b_{\substack{unknown\\but\ in\ same\\direction}}} + \frac{CV_r^2}{n}\right)^{\frac{1}{2}} \qquad \textit{Equation (14)}$$

Usually, all the individual flow rates and their estimated uncertainties are not equal. Because of this, *Equation (10)* should be used to calculate CV_V instead of *Equation (14)*. However, if n is large and the individual flow measurements, Q_k, do not differ by great amounts, then *Equation (14)* is a good estimate of CV_V. If this is the case, then CV_b and CV_r can be thought of as the average systematic and random uncertainties, respectively.

It can be seen from *Equation (14)* that the uncertainty in a measured annual volume will become very low if there is very little bias and if there are a large number of measurements used to calculate the volume even if the random errors and systematic errors with direction unknown are high. Whether effort is put into reducing the bias, or random errors, depends upon the overall goal. If an accurate individual

flow measurement is desired, then effort should be put into reducing both the random and systematic components of error in the flow measurement system. However, if the goal is an accurate total volume over a given time period, then effort should be put primarily into reducing the bias error. As demonstrated by the following examples, the random errors and unknown bias errors (but not unknown bias errors that are know to be in the same direction for multiple meters) will statistically cancel if a large number of measurements are made.

3. General Description

A. Summary of Operation

Water from Lake Michigan is pumped into the Evanston Water Treatment Plant and is measured using one or two Badger Meter Lo-Loss flow tubes, depending on the flow rate. From there, the water is split and some of it is sent to the East Plant for processing while the rest is sent to the West Plant. On occasion, it is necessary to backwash the filters used in the water treatment process. Some of this plant use water is lost to the system. However, much of the plant use water can be reused and is returned to the system upstream from the raw-water meters. This returned water is measured using BIF Dall flow tubes or volumetric techniques. After the water has finished its treatment, it is either sent to the cities of Evanston and Skokie or to the Northwest Water Commission (NWC). The water sent to Evanston and Skokie is measured using one of three Badger Meter Lo-Loss flow tubes. The water sent to NWC is measured using either a turbo meter or a Lo-Loss flow tube, depending on the flow rate. A schematic of the Evanston Water Treatment Plant is provided in Appendix A.

Badger Meter Lo-Loss flow tubes (Figure 1) and Dall flow tubes (Figure 2) are both proprietary variations of the classical Herschel-type venturi meter (Figure 3). Both of these flow tubes are designed to produce higher pressure differentials than classical venturi meters. They are also designed to have a lower permanent pressure loss, a lower weight, and a shorter overall length (Miller, 1996). For Dall flow tubes, the head loss, expressed as a percentage of the differential, is lower than a classical venturi meter with the same throat diameter to approach pipe diameter ratio, or β-ratio. In absolute terms, the head loss of the Dall flow tube varies from about 0.5 to 1.3 times the head loss in a classical Herschel-type venturi meter with same β-ratio (Miner, 1956). The Lo-Loss flow tubes have head loss characteristics that are similar to the Dall flow tubes.

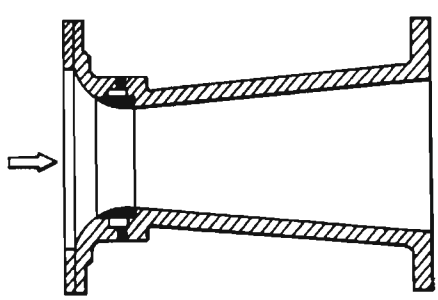

Figure 1. *Schematic diagram of a Badger Meter Lo-Loss flow tube (Miller, 1996).*

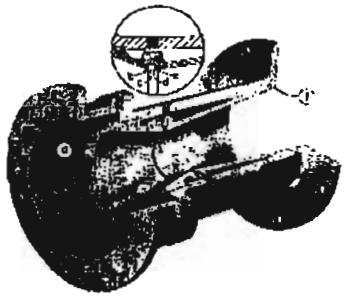

Figure 2. *Cutaway view of a Dall flow tube (Miner, 1956).*

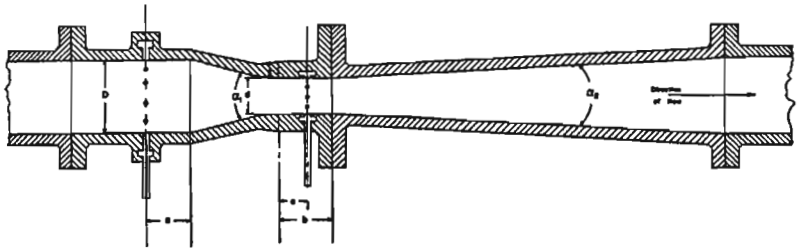

Figure 3. *Schematic diagram of a classical Herschel-type venturi meter (ASME, 1959).*

B. Raw-Water Flow Measurement[1]

The City draws water directly from Lake Michigan through two pipes. This untreated lake water is termed "low lift" or "raw" water. The flow is measured in one of these withdrawal pipes using a 48-inch Badger Meter Lo-Loss flow tube or a 60-inch Lo-Loss. These two raw-water meters will be the measuring point for this analysis. The 48-inch Lo-Loss tube can handle up to 60 MGD, while the 60-inch Lo-Loss tube can handle 80 MGD. Usually, only the 60-inch Lo-Loss tube is used because it is sufficient to handle most of the water demand. During the high water use times in the summer, the 48-inch meter is used in addition to the 60-inch one. As a rough estimate, the 60-inch meter is used alone approximately 75 percent of the time, while both meters are used about 25 percent of the time. The

[1] Raw water was investigated in the original *Technical Review of Lake Michigan Withdrawals from the City of Evanston* report as prepared by the Illinois District of the U.S. Geological Survey. Therefore, the raw water, rather than the finished water, was also investigated in this revision of the original report since the pertinent data and information for the raw-water metering had already been obtained.

pressure differentials are measured using a Bristol Babcock Signature pressure transmitter with a square-root extractor. The specifications for the two raw-water meters are listed in Table 1.

From time to time, it is necessary to backwash some of the filters at the plant. The diversion of water for this process will be termed "plant use." After the filters are backwashed, the water is sent to a detention pond where the sediment settles to the bottom. These settling ponds are cleaned once or twice a year. The level in these settling ponds is kept constant. When backwash water flows into the ponds, water spills over a weir and this spillage is returned to the system upstream of the raw-water meters. This means that the plant use water is actually measured twice. To account for this, the plant use water is measured and this volume of water is subtracted from the daily volume measured by the raw-water meters. The plant use water is divided into three different categories for both the East and West Plants: surface wash water, backwash water, and rapid drawdown water. The surface wash water that is returned to the system from both the East and West Plants is measured using a 6-inch BIF Dall flow tube that can handle up to 1.5 MGD. The East Plant's backwash water is measured using a 30-inch BIF Dall flow tube with a 49.9-MGD capacity, while the West Plant's backwash water is measured using a 20-inch BIF Dall flow tube with a 26.6-MGD capacity. The pressure differentials on all these Dall flow tubes are measured using a Bristol Babcock Signature pressure transmitter with a square-root extractor. The rapid drawdown water is measured volumetrically based on the volume of the filters. Each filter in the East Plant has a capacity of 40,000 gallons, while each filter in the West Plant has a capacity of 20,000 gallons. The specifications for the two surface wash water meters and the two backwash meters are listed in Table 1.

Table 1
Flow Measurement Devices Used at the Evanston Plant

Meter	Manufacturer	Model No.	Approach Pipe Diameter (in.)	Throat Diameter (in.)	β-Ratio	Coefficient of Discharge	Max. Flow Rate (MGD)
Raw water	Badger Meter	PMT-S	60	28.0	0.4667	0.8558*	80
Raw water	Badger Meter	PMT-S	48	25.4	0.5300	0.8370*	60
East surface water	BIF	Not provided	6	4.8	0.7965	0.63**	1.5
West surface water	BIF	Not provided	6	4.8	0.7965	0.63**	1.5
East backwash water	BIF	Not provided	30	20.0	0.6667	0.63**	49.9
West backwash water	BIF	Not provided	20	14.3	0.7153	0.63**	26.6

* *The coefficient of discharge was calculated using Equation (15) of this report.*
** *According to Miner (1956), the discharge coefficient, C_d, for a Dall tube with this β–ratio is approximately 0.63.*

C. Flow Totalization

The flow is totalized using two different methods. In the primary method, the 4- to 20-mA output signal from the pressure transmitter serves as input to a remote terminal unit (RTU). The software in the RTU then converts this raw signal into a flow measurement. The flow measurements are performed approximately every 6 seconds, which correlates to approximately 600 readings being used to obtain an hourly average. The total volume that passed through the meter in a given day would then be the sum of the 24 hourly average readings. This process is used for both the raw water and the plant use water. Once the daily raw water and plant use water volumes are determined, these values are subtracted to obtain the true daily raw-water volume.

In the secondary method, the pressure transmitter signal is sent into a discriminator, summator, and totalizer. The output of the totalizer is then used as the total flow that has passed through the meter. The primary method is more accurate than the secondary method, and the secondary method is just used as a check and as a backup in case there is a problem with the RTU or software.

D. Calibration

An effective calibration procedure should calibrate both the primary flow meter and its secondary measurement device. First, the secondary measurement device, such as a pressure transmitter, should be calibrated to make sure it is reading correctly. Then, the flow meter itself should be calibrated to make sure it is functioning properly. Both the primary and secondary measurement devices can be calibrated under "wet" or "dry" conditions.

(1) Wet Calibration

A wet calibration directly compares the reading obtained by the measurement device to a known standard. For example, the primary flow measurement device can be wet-calibrated if the flow measured through the device is compared to a volumetric measurement. The pressure transmitter can also be wet-calibrated if its pressure differential measurement is compared to a manometer or some other measurement of the pressure actually experienced by the transmitter. This type of calibration is called a wet calibration because in the case of the primary flow measurement device, fluid is actually flowing through the device.

(2) Dry Calibration

In many cases, it is not practical to perform a wet calibration on the primary or the secondary flow measurement device. In this case, a dry calibration can be performed. A dry calibration is inferential in nature because it assumes that the meter will perform in a manner similar to many other meters empirically calibrated earlier (Spitzer, 1990). If the primary flow measurement device is dry-calibrated, it is assumed that the manufacturer's rating curve is correct and that there were no construction errors or anomalies and no changes have occurred over time. A dry calibration

can be performed on the pressure transmitter by connecting it to a calibration unit that provides a "calibrated" differential pressure. Calibrations of this type are called dry calibrations because no fluid is flowing through the primary measuring device. For primary and secondary measurement devices, the manufacturers provide estimates for errors associated with dry calibration. Verification of the manufacturers' claims is beyond the scope of this report.

(3) The City of Evanston's Calibration Procedure

The City does not perform any wet calibrations on their equipment, and all of their calibrations can be considered inferential in nature. For the primary flow measurement device, the City assumes the manufacturer's rating table is correct. When the secondary measurement devices are in operation, they are checked, zeroed, or dry-calibrated every month. When a pressure transmitter is checked, it is simply examined to see if it is functioning properly. When a pressure transmitter is zeroed, the pressure transmitter is checked to see if the zero has drifted. When a pressure transmitter is calibrated, a full dry calibration is performed using an Ametek Mod-Cal Series multi-meter/transmitter module. The Ametek module provides a "calibrated" differential pressure that can be used to determine if the pressure transmitter is reading properly.

For the secondary measurement device calibration, we can estimate measurement uncertainty based on the manufacturers' literature, assuming that the dry calibrations were performed satisfactorily. Insufficient information was provided regarding these dry calibrations to prove or disprove the manufacturers' claims. In general, the only factor that would change the calibration of a particular meter would be any growth or deposition that occurs in the throat of the Lo-Loss flow tube or at one of the pressure tap openings. Because the throats of these venturi-type meters are made of bronze, this type of uncertainty is assumed to be insignificant.

4. Uncertainty in Metering and Measurement Components

A. Badger Meter Lo-Loss Flow Tube

The City is using PMT-S model Lo-Loss flow tubes for their raw-water flow measurements. These instruments are designed for wastewater, sludge, slurry, or other fluids with suspended solids. This is an appropriate selection because there are occasions during the year when an ice/water mixture is withdrawn from the lake through the meters. The throat of the meter is made out of bronze so there should be very little corrosion or deposition in the critical throat section. According to manufacturer's specifications, the uncertainty of the Lo-Loss flow tube, CV_m, is ± 0.75 percent of the actual flow rate under dry calibration conditions. If the meters are volumetrically calibrated, the manufacturer claims the uncertainty is reduced to ± 0.25 percent.

We were unable to obtain any information specific to the Lo-Loss flow tubes in regards to the effects of wear, corrosion and tuberculation on the venturi tubes accuracy. For classical venturi meters Cheremisinoff stated that the "accuracy remains constant over long-term services because discharge coefficients show minimum effect from . . . changes in surface roughness of the device caused by erosion or corrosion." However, for BIF Dall flow tubes, Miner (1956) performed tests on the effects of increasing and decreasing the radius at various portions of the Dall flow tube. The results indicated that the coefficient of discharge could increase or decrease depending on the location of the wear, corrosion or tuberculation with the greatest change in the discharge coefficient causing a decrease in accuracy by 1 percent. Since the Lo-Loss flow tube's design is more similar to that of a Dall flow tube's than a classical venturi, but the location and extent of wear, corrosion, and tuberculation is unknown, an additional uncertainty of ±1.00 percent is assumed and will be added to the specified uncertainty of ±0.75 percent for a total uncertainty of ±1.75 percent. The uncertainly is systematic in nature with an unknown bias direction. This uncertainty is conservative and should be valid as long as the City keeps the meter within the designed flow capacities (i.e., 80 MGD for the 60-inch meter and 60 MGD for the 48-inch meter). If the City exceeds these design capacities, an additional uncertainty will be introduced.

B. BIF Dall Flow Tubes

There are three BIF Dall flow tubes used to measure the various types of plant use water. The City could only locate a calibration sheet for one of these Dall flow tubes and none of the manufacturer's accuracy specifications. To estimate the uncertainty of the Dall flow tubes, the specifications presented in the literature were used. Miner (1956) states that there is a 20:1 chance that the discharge coefficient can be determined to within ± 1 percent. Dall flow tubes differ from venturi meters in that they have a sharp-edged groove around the circumference of the throat area at the bottom of which the pressure taps are located (see Figure 2). Because these meters were installed in the mid-1960s, there is a possibility of dulling or rounding of these sharp edges. Additionally, there is a potential of corrosion and tuberculation in the flow tube. The City had not inspected the meter for wear, corrosion or tuberculation.

Miner (1956) performed tests on the effects of increasing and decreasing the radius at various portions of the Dall flow tube. The results indicated that the coefficient of discharge could increase or decrease depending on the location of the wear, corrosion or tuberculation. The worst test case caused the discharge coefficient to decrease by 1 percent. Since the meters have not been inspected and measured, the locations and extent of wear, corrosion, and tuberculation are unknown. Therefore, to set a maximum error limit, an additional uncertainty of ±1.00 percent will be added to the assumed flow tube uncertainty of ±1.00 percent for a total uncertainty of ±2.00 percent. This combined error is systematic in nature with an unknown bias direction. The plant use water accounts for a very small portion of the total water measured (i.e., about 1 to 2 percent of the daily volume that passes through the raw-water meters) and therefore the accuracy of the plant use meters will not have a significant impact on the overall accuracy of the system.

C. Rapid Drawdown

Some of the plant use water returned to the system comes from rapid drawdown of the East and West Plant filters. The amount of rapid drawdown water is measured volumetrically. It was estimated that due to the uncertainty in the dimensions of the filters, the uncertainty in the rapid drawdown was approximately ± 35.0 cubic feet (± 0.000262 MG) and ± 69.7 cubic feet (± 0.000521 MG) for the West and East drawdown filters, respectively. It was also assumed that this uncertainty was systematic in nature with an unknown bias direction. The uncertainty of the rapid drawdown water was not examined further because the amount of this water is insignificant compared to the amount of raw water. Thus, the uncertainty of the rapid drawdown volume should not significantly impact the estimated uncertainty of the adjusted raw water.

D. Pressure Taps

The pressure taps that are used to measure the pressure differential should be square with no roughness, burrs or wire edges (Miller, 1996). If this were not the case, then a bias error would be introduced due to the pressure taps. It was not practical to inspect the pressure taps of these meters. These flow measurement devices were all constructed under a controlled manufacturing environment with very little opportunity for a pressure tap to be constructed poorly. Thus, it was assumed that the manufacturer constructed the pressure taps correctly and that no additional error would be introduced due to the pressure taps.

E. Meter Installation

An appropriate length of straight, circular pipe is required upstream of the flow meter to guarantee that the velocity profile entering the meter is not distorted and that the meter will perform properly. The length of this approach section depends on number and types of bends and fittings located upstream of the meter. Table 2 lists the approximate approach length and upstream fittings for the east and west

meters located at the Evanston Plant. The "Required Approach Length for Zero Error" and the "Required Approach Length for 0.5-Percent Error" values reported in Table 2 were taken from ISO 5167-1:1991.

As shown in Table 2, the 60-inch venturi meter meets the minimum lengths for both the first and second upstream fitting requirements. The 48-inch venturi meter has two different upstream arrangements depending on the flow routing. The one arrangement provides adequate upstream piping for both the first and second upstream fitting requirements, while the other arrangement does not. The arrangement that does not meet these requirements includes 39.2 feet to piping downstream of a single bend and then 6.0 feet of piping downstream of a valve. The first upstream piping length of 39.2 feet meets the ISO requirements, while the second upstream piping length of 6.0 feet falls just short of the piping requirement for 0.5-percent error (7.0 feet). Although this second upstream length is less than the required minimum length for a 0.5-percent error, the exact error value is unknown. Consequently, although the error may be greater than 0.5 percent, this value will be used in the analysis. This inadequate pipe length will cause a distorted flow profile with little swirl at the venturi meter. No information was available for the bias direction for a distorted profile with little swirl. Miller reported that if a swirl was produced at the venturi meter, the flows tend to be under-reported Therefore, it is assumed that for this application the flows of a distorted flow profile without swirl will also be under-reported. Given this, an error of -0.5 percent for the 48-inch venturi meter will be used should the water be routed through the inadequate piping arrangement. This value is systematic in nature.

Table 2
Upstream Disturbances and
Approximate Approach Lengths for the
Various Venturi Meters at the Evanston Plant

Venturi	First Upstream Fitting	First Upstream Approach Length (feet)	Required Pipe Length for Zero Error (feet)	Required Pipe Length for ± 0.5% Error (feet)	Second Upstream Fitting	Second Upstream Approach Length (feet)	Required Pipe Length for Zero Error (feet)	Required Pipe Length for ± 0.5% Error (feet)
60-inch meter	Single bend	52.5	5.0	2.5	Unknown[a]	Unknown[a]	Unknown[a]	Unknown[a]

Table 2
Upstream Disturbances and Approximate Approach Lengths for the Various Venturi Meters at the Evanston Plant

Venturi	First Upstream Fitting	First Upstream Approach Length (feet)	Required Pipe Length for Zero Error (feet)	Required Pipe Length for ± 0.5% Error (feet)	Second Upstream Fitting	Second Upstream Approach Length (feet)	Required Pipe Length for Zero Error (feet)	Required Pipe Length for ± 0.5% Error (feet)
48-inch meter[b]	Tee connection	24.4	4.0[c]	2.0[c]	Expander	25.0	11.0	7.0
	Single bend	39.2	4.0	2.0	Valve	6.0	11.0	7.0

[a] *The exact length and upstream fitting is unknown, but based on what information is available, the length of pipe is assumed to be adequate for any type of upstream fitting.*

[b] *Depending on plant operations, two different upstream flow paths could occur upstream of the 48-inch venturi. Therefore, both flowpaths are shown in Table 2.*

[c] *For the tee connection, there was no information available on the upstream length requirements. Therefore, it was assumed that a tee connection had the same upstream piping requirements as a single bend.*

Inadequate straight piping downstream of the meter can also affect the meter's accuracy. ISO 5167-1:1991 reference materials indicate that as long as the downstream length of straight piping exceeds four times the meter's throat diameter, no additional error is expected. Unlike for the upstream piping lengths, the ISO 5167-1:1991 reference does not indicate what length would be required to provide an uncertainty of 0.5 percent or any other uncertainty value. The required and actual downstream lengths of straight pipe is summarize in Table 3. In both cases, the downstream straight pipe lengths are adequate to ensure no additional error due to downstream piping geometry.

Table 3
Summary of Required and Actual Downstream Straight Pipe Lengths at the Evanston Plant

Venturi	Throat Diameter (feet)	Required Downstream Pipe Length for Zero Error (feet)	Actual Downstream Pipe Length (feet)	Meets Required Downstream Pipe Length?
60-inch meter	2.33	9.3	55.0	Yes
48-inch meter	2.12	8.5	14.0	Yes

The 30-, 20-, and 6-inch BIF Dall flow tubes (i.e., the plant use meters) have β-ratios of 0.67, 0.71, and 0.80, respectively. Dall flow tubes require more straight pipe lengths downstream of a disturbance than classical venturi-meters or Lo-Loss flow tubes. For Dall flow tubes with these β-ratios, between 10 and 15 straight pipe lengths are required downstream of a single elbow (Miner, 1956). The installation of the backwash and surface wash meters was not shown on the schematic diagram provided by the City. However, with the exception of one piping length on the 48-inch raw-water meter, the raw-water meters have appropriate lead lengths, so it is assumed that the plant use meters are properly installed also. In addition, even if the plant use meters and surface wash meters were not installed properly, this installation would not have a significant impact on the final result because of the amount of plant use water is small relative to the raw water.

F. Sampling

Additional uncertainty can also be introduced due to how the flow measurement data is recorded. If, for example, a quantity varies sinusoidally, but that quantity is only measured at the times when the quantity is at a peak, then the average measurements will be higher than the true average. This would introduce a bias into the system. On the other hand, if a quantity is measured or sampled frequently, then there will be very little error introduced due to sampling. The City measures the flow rate about every 6 seconds. This implies that the daily volume measurements are actually composed of about 14,400 individual flow measurements. In the same vein, the annual volume measurement will be composed of about 5,256,000 individual flow measurements. Because the City records the flow rate so often, there should be no error introduced due to sampling.

G. Pressure Differential Measurement

As mentioned earlier, the pressure differential on both the raw-water meters and plant use meters are measured using a Bristol Babcock Signature pressure transmitter. Once again, it was assumed that the accuracy specifications provided by the manufacturer were correct. Linearity, hysteresis, repeatability, deadband, stability, and temperature effects were considered the most important components of the overall accuracy of the pressure differential measurement using the Bristol Babcok pressure transmitter. The manufacturer also indicates that there may be mounting position effects, power supply effects, vibration effects, static pressure effects, and electromagnetic induction (EMI) effects. However, it was assumed that these factors were insignificant compared to the others.

Bristol Babcock states that the accuracy of their pressure transmitters is ± 0.2 percent of the upper range limit (URL). This accuracy includes the effects of linearity, hysteresis, and repeatability. Because the City's calibration procedure was not completely defined, the combination of these errors was assumed to be systematic in nature with an unknown bias direction. The deadband is reported to be ± 0.01 percent of URL. Because there are many flow changes throughout the year, the deadband can be considered a random error. The stability is reported as ± 0.25 percent of URL per 6 months for both zero stability and

span stability. To set a maximum error limit, the entire uncertainty due to stability was used. The bias introduced due to temperature effects is reported as ± 1.0 percent of URL per 100 °F. The lake temperature varies from about 32 to 70 °F. This is approximately a 40 °F temperature range. Again, to set a maximum error limit, the entire range of temperatures was considered in estimating the uncertainty due to temperature effects. Thus, the bias due to temperature effects would be about ± 0.40 percent of URL. The accuracy, stability, and temperature effects are systematic in nature with an unknown bias direction.

The Bristol Babcock pressure transmitter has a variable input range so that the range can be best matched to the measured pressure differential. Thus, the URL will be different depending on the meter the pressure transmitter is hooked up to. For the typical flows measured in the two raw-water meters, the range of 0 to 120 inches of water is used. The maximum pressure differential for the 6-inch Dall flow tube is around 96 inches. This implies that the appropriate range for the pressure transmitter is 0 to 120 inches of water. The maximum pressure differential for the 20-inch Dall flow tube is around 420 inches, so the appropriate pressure transmitter range is 0 to 720 inches of water. The maximum pressure differential for the 30-inch Dall tube is around 405 inches of water so it will also require a pressure transmitter range from 0 to 720 inches of water.

H. Dry Calibration of Pressure Transmitter

As mentioned earlier, the secondary measurement devices are dry-calibrated once a month using an Ametek Mod-Cal II Series multi-meter/transmitter module. Because the pressure transmitter is adjusted to the Ametek reading, all of the random and systematic components of the Ametek module will become a bias reported by the Bristol Babcock pressure transmitter. There are three uncertainty components to the Ametek Modcal II – two for the pressure module and one from the multi-meter. The accuracy of the Ametek pressure module is reported to be ± 0.05 percent of URL from 10 percent to 100 percent of URL plus one digit of the display.[2] It was assumed that the display was to two decimal places (i.e., to the nearest hundredth). Most of the time, the Ametek module will be operated in this range so this value was used for all the readings. The stability of the pressure module is reported as ± 0.05 percent of URL per 6 months.[3] To set a maximum error limit, the entire uncertainty due to stability was used. Like the Bristol Babcock pressure transmitter, the Ametek module has various input ranges. Thus, the URL will depend on the type of meter the module is connected to. To calibrate the raw-water meters and the

---

[2] Note that the City's Ametek Modcal II specifications report an accuracy of ±0.05 percent *plus one digit of display* for the pressure module, whereas the city of Chicago's Ametek Modcal II specifications report an accuracy of ±0.05 percent for the pressure module. Given this inconsistency, it will be assumed that each city's pressure module specifications are accurate for their respective Ametek Modcal II calibrator.

[3] The 6 months refers to the AMETEK Modcal II's stability, not the pressure transmitter's. Therefore, the time period between using the Modcal II to calibrate the pressure transmitter doesn't matter as long as the Modcal II is sent in for calibration and maintenance before it exceeds the ± 0.05 percent of URL stability value. We assume that the Modcal II is properly maintained and calibrated.

6-inch Dall flow tube, the Ametek setting with a maximum pressure of 10 psi (276.9 inches of water) is used. To calibrate the 20- and 30-inch Dall flow tubes, the Ametek setting with a maximum pressure of 30 psi (830.7 inches of water) is used. The accuracy of the multi-meter portion of the Ametek module was not included in the specifications provided by the City. However, the City of Chicago also provided Ametek Modcal II specifications for the calibrator used at Chicago Avenue station that reported the uncertainty of the multi-meter to be ± 0.05 percent of reading plus one count from 10 to 100 percent of full scale, with full scale being equal to 55 mA. It is assumed that this multi-meter accuracy is also correct for the City's Modcal II and that one count is equal to one resolution, or 0.01mA. The Ametek module is temperature-compensated over the range of 32 °F to 113°F so there is no additional uncertainty introduced due to temperature effects. Note, however, that the three parameters of the calibrator (accuracy and stability of the pressure module and accuracy of the current multimeter) may not be totally uncorrelated since the pressure transmitter converts a physical measurement, the pressure, into an electrical signal while the multimeter loop current appears to be correlated to the pressure from the pressure module. Although, these parameters may not be totally uncorrelated, it was not accounted for in this analysis. All three accuracies for the Ametek Calibrator are systematic in nature with an unknown bias direction. However, since this calibrator is used to calibrate several meters, this bias would be in the same direction for all the meters.

5. Sample Uncertainty Calculations

To show how the uncertainty of a raw-water measurement was estimated, a series of sample calculations follow. The City provided the hourly log readings for the raw-water meters over a 3-week period. The time period included February 17 through 23, May 3 through 9, and September 1 through 7, 1997. It was assumed that this 3-week period was representative of City's withdrawals. It was also assumed that the City's hourly withdrawals were constant over that hour. Using these assumptions, the uncertainty of the hourly readings and the daily reading can be obtained. The uncertainties can be reported as standard deviation of measurement (expressed by the variable *s*) or in relative terms (expressed by the variable *CV*, which is the standard deviation divided by the mean of the measurements).

A. Uncertainty of Hourly Flow Measurements for Raw-water Meters

(1) Systematic (Bias) Error

The majority of the error components are systematic in nature. These systematic errors include error from the venturi, the pressure transmitters, and the calibration equipment. To determine the uncertainty of the hourly flow measurements, all uncertainties need to be in terms of percent accuracy of actual flow rate. The errors associated with the venturi is already expressed in these terms. However, the accuracy associated with the pressure transmitters and calibration equipment are based on the pressure or amperage readings in terms of percent accuracy of the URL.

The standard equation for the flow through a venturi-type meter is:

$$Q = \frac{C_d A_t}{\sqrt{1-\beta^4}} \sqrt{2g\Delta h} \qquad \textit{Equation (15)}$$

Where:

Q = Flow rate

C_d = Discharge coefficient

A_t = Area of the throat section

β = Ratio of the throat diameter to the approach section diameter

g = Acceleration due to gravity

Δh = Pressure differential across the meter.

Note that the model assumes that the discharge coefficient, throat area, and throat to approach diameter ratio (i.e. β-ratio) introduce no errors to the discharge calculations. That is, the differential pressure head of the venturi meter is the only source of error or uncertainty.

For a Lo-Loss flow tube, the discharge coefficient can be expressed as (Miller, 1996):

$$C_d = 1.005 - 0.471\beta + 0.564\beta^2 - 0.514\beta^3 \qquad \textit{Equation (16)}$$

For the 60-inch Lo-Loss flow tube, which was the raw-water meter used during the study periods, the β-ratio is 0.467 (i.e., 28 inches divided by 60 inches). The discharge coefficient can then be determined:

$$C_d = 1.005 - 0.471(0.467) + 0.564(0.467)^2 - 0.514(0.467)^3 = 0.856 \qquad \textit{Equation (17)}$$

The throat area, A_t, is:

$$A_t = \frac{\Pi(28.0)^2}{4} = 615.75in^2 = 4.28ft^2 \qquad \textit{Equation (18)}$$

For the first hour on February 17, 1997, 1.917 MG passed through the 60-inch raw-water meter and no water was routed through the 48-inch raw-water meter. The average rate would then be 24 times this value or 46.008 MGD. The pressure differential developed from this flow rate can be determined from Equation (15).

$$\Delta h = \left[\frac{Q\sqrt{1-\beta^4}}{C_d A_t \sqrt{2g}}\right]^2 = 12\left[\frac{1.547(46.008\,MGD)\sqrt{1-(0.467)^4}}{(0.856)\left(4.28\,ft^2\right)\sqrt{2\left(32.16\,ft/s^2\right)}}\right]^2 = 67.1\ in. \qquad \textit{Equation (19)}$$

The values of 12 and 1.547 that appear in *Equation (19)* are unit conversion factors to convert feet to inches and MGD to cubic feet per second (cfs), respectively.

The uncertainty of the pressure transmitter has four bias components: accuracy, zero stability, span stability, and temperature effects. The accuracy of the pressure transmitter is ± 0.2 percent

of URL, which translates into ± 0.24 inches of water in this case. The uncertainty in this flow rate due to the accuracy of the pressure transmitter would then be:

$$CV_{Qa} = \frac{Xs_p}{\Delta h} = \frac{(0.5)(\pm 0.24in)}{67.1in} = \pm 0.179\% \qquad \textit{Equation (20)}$$

Where:

CV_{Qa}	=	Uncertainty in the flow rate due to the accuracy of the pressure transmitter.
s_p	=	Uncertainty in the pressure transmitter (due to transmitter accuracy in this case).
X	=	Sensitivity coefficient equal to 0.5 for the pressure transmitter as flow is directly proportional to the square root of the pressure differential.
Δh	=	Pressure differential.

Refer back to Section 2.A of this report for additional information on the sensitivity coefficient, *X*. The uncertainty in the flow rate due to the transmitter's accuracy, stability, and temperature affect for the 60-inch raw-water meter is shown in Table 4.

The Bristol Babcock pressure transmitter is dry-calibrated once a month using an Ametek Modcal II multi-meter/transmitter module. There are three uncertainty components to the Ametek Modcal II, two for the pressure module and one from the multi-meter. The accuracy of the Ametek pressure module is reported to be ± 0.05 percent of URL from 10 percent to 100 percent of URL plus one digit of the display. The stability of the pressure module is reported as ± 0.05 percent of URL per 6 months. Like the Bristol Babcock pressure transmitter, the Ametek module has various input ranges. Thus, the URL will depend on the type of meter the module is connected to. To calibrate the 60-inch raw-water meters, the Ametek setting with a maximum pressure of 10 psi (276.9 inches of water) is used. The accuracy of the multi-meter portion of the Ametek module is reported to be ± 0.05 percent of reading plus one count from 10 percent to 100 percent of full scale.

Thus, the uncertainty due to the accuracy of the pressure component of the calibrator would be ± 0.148 inches of water (i.e., ± 0.0005 times 276.9, plus 0.01) for the 60-inch raw-water meter. The uncertainty in the flow rate due to pressure component of the calibrator for the 60-inch raw-water meter would then be:

$$CV_{Qa} = \frac{Xs_p}{\Delta h} = \frac{(0.5)(\pm 0.148in)}{67.1in} = \pm 0.110\%$$ *Equation (21)*

The current reading's uncertainty is reported as ± 0.05 percent of reading, plus one digit of display. The current resolution is assumed to be 0.01 mA. For the first hourly flow reading on February 17, 1997, the flow rate was 46.008 MGD which is equal to 13.20 mA given that flow and amperage are known to have a linear relationship with 4 mA equal to zero flow and 20 mA equal to the meter's capacity of 80 MGD. Thus, the uncertainty in the current component of the calibrator would be ± 0.0166 mA (i.e., ± 0.0005 times 13.20, plus 0.01) for 60-inch raw-water meter. The uncertainty in the flow rate due to the current component of the calibrator for the 60-inch raw-water meter would then be:

$$CV_{Qa} = \frac{Xs_i}{\Delta i} = \frac{(1.0)(\pm 0.0166mA)}{13.2\,mA} = \pm 0.126\%$$ *Equation (22)*

Where:

s_i = Uncertainty due to the current reading for the calibrator pressure differential and Δi is the current differential.

Note that for this calculation, the sensitivity coefficient, X, is 1.0 since the flow rate is directly proportional to the current (i.e., a linear relationship). A summary of the uncertainty estimates due to the calibration equipment appears in Table 4.

Table 4
Uncertainty From the Pressure Transmitter and Calibration Equipment for the First Hourly Reading on February 17, 1997, for the 60-Inch Raw-Water Meter

Venturi	Instrument	Uncertainty Source	CV for Δh	URL or Reading	Uncertainty for Δh	CV for Flow (%)
60-inch Raw water	Bristol Babcock	Pressure transmitter accuracy	0.20% of URL	120 in. water	0.24 in. water	0.179
60-inch Raw water	Bristol Babcock	Pressure transmitter zero stability	0.25% of URL	120 in. water	0.30 in. water	0.224
60-inch Raw water	Bristol Babcock	Pressure transmitter span stability	0.25% of URL	120 in. water	0.30 in. water	0.224
60-inch Raw water	Bristol Babcock	Pressure transmitter temperature effect	1.00% of URL per 100°F	120 in. water	0.48 in. water	0.358

Table 4
Uncertainty From the Pressure Transmitter and Calibration Equipment for the First Hourly Reading on February 17, 1997, for the 60-Inch Raw-Water Meter

Venturi	Instrument	Uncertainty Source	CV for Δh	URL or Reading	Uncertainty for Δh	CV for Flow (%)
60-inch Raw water	Ametek	Pressure accuracy	0.05% of URL plus 1 count	277 in. water	0.15 in. water	0.110
60-inch Raw water	Ametek	Pressure stability	0.05% of URL	277 in. water	0.14 in. water	0.103
60-inch Raw water	Ametek	Multi-meter accuracy	0.05% of reading plus 1 count	13.20 mA	0.0166 mA	0.126

In this study, the bias uncertainty estimates will be broken down into three categories:

- Bias uncertainty with a known bias direction.
- Bias uncertainty with an unknown bias, but known to be in the same direction for each meter.
- Bias uncertainty with an unknown bias direction.

Table 5 lists the type of bias uncertainty for each of the bias estimates for the first hourly readings the 60-inch raw-water venturi Additionally, Table 5 also provides the absolute bias estimates for the first hourly readings taken from the 60-inch raw-water venturi based on the following equation:

$$s_b = CV_{flow} \cdot Q_{\substack{first \\ hour}} = (0.00179)(46.008\,MGD) = 0.082\,MGD \qquad \textit{Equation (23)}$$

Where:

S_b = Standard deviation (or absolute uncertainty) of the flow measurement due to the respective systematic uncertainty estimate

CV_{flow} = Relative uncertainty in the flow rate and $Q_{first\ hour}$ is the flow for the first hour.

Table 5
Absolute Bias Estimates for the First Hourly Readings
Taken on February 17, 1997

Venturi	Bias Component	Type of Bias	CV_b(%)	S_b (MGD)
60-inch Raw water	Venturi	Direction unknown	±1.750	± 0.805
	Approach lengths	N/A	N/A	N/A
	Pressure transmitters			
	- *Accuracy*	Direction unknown	± 0.179	± 0.082
	- *Zero stability*	Direction unknown	± 0.224	± 0.103
	-*Span stability*	Direction unknown	± 0.224	± 0.103
	- *Temperature*	Direction unknown	± 0.358	± 0.164
	Calibrator			
	- *Pressure accuracy*	Direction unknown, but in same direction for all meters	± 0.110	±0.051
	- *Pressure stability*		±0.103	±0.047
	- *Multi-meter accuracy*		±0.126	±0.058

The systematic uncertainty estimates for the 60-inch raw-water meter can be combined as shown below in *Equation (24)* to determine the overall systematic uncertainty for the first hour on February 17.

$$S_b = \sum_{i=1}^{l_1}\sum_{j=1}^{m} S_{b_{ij\ \text{direction known}}} \pm \left[\sum_{i=1}^{l_2}\sum_{j=1}^{m} S^2_{b_{ij\ \text{direction unknown}}} + \sum_{i=1}^{l_3}\left(\sum_{j=1}^{m} S_{b_{ij\ \text{unknown but in same direction}}}\right)^2\right]^{\frac{1}{2}} \qquad \textit{Equation (24)}$$

Where:

S_b	=	Combined uncertainty or standard deviation of the flow measurement.
$S_{bij\ direction\ known}$	=	Absolute bias uncertainty of known direction for measurement *i,j.*
$S_{bij\ unknown\ but\ in\ same\ direction}$	=	Absolute bias uncertainty of unknown direction but known to occur in the same direction for each meter for measurement *i,j.*
$S_{bij\ direction\ unknown}$	=	Absolute bias uncertainty of unknown direction for measurement *i,j.*
m	=	The number of meters.
l_1, l_2, l_3	=	The number of uncertainty components in $S_{bij\ direction\ known}$, $S_{bij\ direction\ unknown}$, and $S_{bij\ unknown\ but\ in\ same\ direction}$, respectively.

For the first hour, using *Equation (24)*, the overall absolute bias uncertainty, S_b, was found to be ± 0.844 MGD, which corresponds to a relative uncertainty, CV_b, of ± 1.83 percent (i.e., ± 0.844 MGD divided by the total flow rate of 46.008 MGD). This process was repeated for each of the 24-hour readings taken during the day. The results are provided in Table 6 (table combining random and bias).

(2) Random Error

Only the pressure transmitter's dead band was identified as being random in nature. The Bristol Babcock transmitters have a dead band of ± 0.01 percent of the URL. The uncertainty due to the dead band of the pressure transmitters can be calculated using the methodology shown in *Equation (19)*. The uncertainty in the pressure differential measurement due to dead band would be ± 0.012 inches of water (i.e., ± 0.0001 times 120) the 60-inch raw-water meter. Applying *Equation (19)*, the uncertainty in the flow rate due to the dead band of the pressure transmitter would then be ±0.009 percent (the relative random uncertainty, CV_r) or 0.004 MGD (the absolute random uncertainty, S_r) for the 60-inch raw-water meter. This process was repeated for each of the 24-hour readings taken during the day. The results are provided in Table 6 (table combining random and bias).

(3) Combining Systematic and Random Errors

The systematic and random errors can be combined using the following methodology:

$$S_b = \sum_{i=1}^{l_1}\sum_{j=1}^{m} S_{b_{ij\,\text{direction known}}} \pm \left[\sum_{i=1}^{l_2}\sum_{j=1}^{m} S^2_{b_{ij\,\text{direction unknown}}} + \sum_{i=1}^{l_3}\left(\sum_{j=1}^{m} S_{b_{ij\,\text{unknown but in same direction}}}\right)^2 + \sum_{i=1}^{l_4}\sum_{j=1}^{m} S^2_{r_{ij}}\right]^{\frac{1}{2}} \qquad \textit{Equation (25)}$$

Where:

S_{rij}	=	Absolute random uncertainty
L_4	=	The number of uncertainty components in S_{rij}

Using *Equation (25)*, the overall uncertainty of the 60-inch raw-water meter's flow measurements made in the first hour of February 17 is ± 0.844 MGD, or ± 1.83 percent.

This process is repeated for each of the 24-hour readings taken during the day and the results can be seen in Table 6. The average uncertainty, *CV*, of an hourly flow measurement performed on February 17 was ± 1.88 percent. This implies that the 95 percent confidence interval, *CI*, for an hourly flow measurement would be ± 3.89 percent (±1.88 times 2.069). Over the entire study period, the average uncertainty of an hourly flow measurement, *CV*, was found to be ± 1.87 percent. The average 95-percent confidence interval of an hourly flow measurement, *CI*, would then be equal to ± 3.67 percent (±1.87 times 1.960). This process was repeated for each of the 24-hour readings taken during the day. The results are provided in Table 6 (table combining random and bias).

Table 6

Systematic, Random, and Overall Uncertainty Estimates for the 60-inch Raw Water Meter's Hourly Flow Measurements Made on February 17, 1997

Hour	Total Flow (MGD)	CV_b (%)	S_b (MGD)	CV_r (%)	S_r (MGD)	Overall *CV* (%)
1	46.0	± 1.83	± 0.844	± 0.01	± 0.869	± 1.83
2	45.9	± 1.83	± 0.842	± 0.01	± 0.868	± 1.83
3	46.0	± 1.83	± 0.843	± 0.01	± 0.869	± 1.83
4	45.9	± 1.83	± 0.842	± 0.01	± 0.868	± 1.83
5	45.8	± 1.83	± 0.841	± 0.01	± 0.867	± 1.83
6	45.7	± 1.84	± 0.840	± 0.01	± 0.866	± 1.84
7	36.1	± 1.96	± 0.706	± 0.01	± 0.741	± 1.96
8	35.7	± 1.97	± 0.702	± 0.01	± 0.737	± 1.97
9	35.7	± 1.97	± 0.702	± 0.01	± 0.737	± 1.97
10	35.8	± 1.96	± 0.703	± 0.01	± 0.738	± 1.96
11	35.7	± 1.97	± 0.702	± 0.01	± 0.737	± 1.97
12	35.7	± 1.97	± 0.702	± 0.01	± 0.737	± 1.97
13	35.8	± 1.96	± 0.703	± 0.01	± 0.738	± 1.96
14	35.8	± 1.96	± 0.703	± 0.01	± 0.738	± 1.96
15	36.9	± 1.94	± 0.716	± 0.01	± 0.750	± 1.94
16	45.6	± 1.84	± 0.838	± 0.01	± 0.864	± 1.84
17	45.6	± 1.84	± 0.838	± 0.01	± 0.864	± 1.84
18	45.4	± 1.84	± 0.834	± 0.01	± 0.860	± 1.84
19	45.5	± 1.84	± 0.836	± 0.01	± 0.862	± 1.84
20	45.4	± 1.84	± 0.834	± 0.01	± 0.861	± 1.84
21	45.7	± 1.84	± 0.838	± 0.01	± 0.865	± 1.84

Table 6
Systematic, Random, and Overall Uncertainty Estimates for the 60-inch Raw Water Meter's Hourly Flow Measurements Made on February 17, 1997

Hour	Total Flow (MGD)	CV_b (%)	S_b (MGD)	CV_r (%)	S_r (MGD)	Overall CV (%)
22	45.5	± 1.84	± 0.836	± 0.01	± 0.862	± 1.84
23	45.4	± 1.84	± 0.835	± 0.01	± 0.861	± 1.84
24	45.5	± 1.84	± 0.835	± 0.01	± 0.861	± 1.84

B. Uncertainty of Daily Volume Measurements for Raw-Water Meter

An estimate of the uncertainty of the daily volume pumped through the station can be obtained from the 24 hourly flow measurements. The volume pumped through the 60-inch raw-water meter is the average of the 24 hourly flow measurements times 1 day. For February 17, 1997, the average volume pumped through the station is 42.006 MG.

The uncertainty of the systematic daily volume measurements can be determined using the following equation:

$$CV_{Vb} = CV_{bV_{\substack{direction\\known}}} + \frac{\Delta t}{m_v}\left(\sum_{k=1}^{n} Q_k^2 CV_{b_{k_{\substack{direction\\unknown}}}}^2 + \left(\sum_{k=1}^{n} Q_k CV_{b_{k_{\substack{unknown\\but\ in\ same\\direction}}}}\right)^2\right)^{\frac{1}{2}} \qquad \textit{Equation (26)}$$

Where:

CV_{Vb}	=	Relative uncertainty of the total bias volume measurement.
$CV_{bV\ direction\ known}$	=	Bias with known direction of the total volume measurement.
$CV_{bk\ direction\ unknown}$	=	Bias error in individual flow measurement *k* where the bias direction is unknown.

$CV_{bk\ unknown\ but\ in\ same\ direction}$	=	Bias error in individual flow measurement *k* where the bias direction is unknown, but in the same direction for all meters.
Δt	=	Time increment.
Q_k	=	Value of flow measurement *k*.
m_V	=	Sum of all *n* volume measurements.

Using *Equation (26)*, the relative systematic error, CV_{Vb}, was ± 0.44 percent for February 17, 1997.

The average random uncertainty component for the daily volume can be obtained from the following expression:

$$CV_{Vr} = \pm \frac{\Delta t}{m_v}\left(\sum_{k=1}^{n} Q_k^2 CV_{rk}^2\right)^{\frac{1}{2}} \qquad \textit{Equation (27)}$$

Where:

CV_{rk}	=	Random error in individual flow measurement *k*.
CV_{Vr}	=	Relative uncertainty of the volume measurement.

Using *Equation (27)*, the relative random uncertainty of the daily volume, CV_{vr}, for February 17, 1997, is 0.002 percent.

The overall uncertainty of the daily volume can then be found by combining the systematic and random uncertainty components in the following manner:

$$CV_V = CV_{bV_{\substack{direction\\known}}} + \frac{\Delta t}{m_v}\left(\sum_{k=1}^{n} Q_k^2 CV_{b_{k_{\substack{direction\\unknown}}}}^2 + \left(\sum_{k=1}^{n} Q_k CV_{b_{k_{\substack{unknown\\but\ in\ same\\direction}}}}\right)^2 + \sum_{k=1}^{n} Q_k^2 CV_{r_k}^2\right)^{\frac{1}{2}} \qquad \textit{Equation (28)}$$

For the date in question, the overall uncertainty of the daily volume, CV_V, was found to be ± 0.44 percent, or ± 0.18 MG (± 0.44 percent times 42.0 MG). The 95-percent confidence interval on the daily volume, CI_v, would then be ± 0.91 percent (± 0.44 times 2.069). Note that the 95-percent confidence interval for the daily volume (± 0.91 percent) is much narrower than the 95-percent confidence interval for the hourly flow measurement (± 3.89 percent). This is because the random errors and systematic errors with unknown direction associated with an hourly flow measurement are statistically canceled when they are summed over a day's time. The 60-inch raw-water meter's average random, systematic, and overall uncertainty for each day in each 1-week study period were found using the above method. A summary of the daily volume uncertainties for the February 1997 study period appears in Table 7.

Table 7
Estimated Uncertainties for the 60-inch Raw-water Meter's Daily Volumes in the February 1997 Study Period

Date	CV_{Vb} (%)	CV_{Vr} (%)	CV_V (%)	CI_V (%)
February 17	± 0.44	± 0.002	± 0.44	± 0.91
February 18	± 0.45	± 0.002	± 0.45	± 0.93
February 19	± 0.44	± 0.002	± 0.44	± 0.91
February 20	± 0.45	± 0.002	± 0.45	± 0.94
February 21	± 0.46	± 0.003	± 0.46	± 0.96
February 22	± 0.42	± 0.002	± 0.42	± 0.87
February 23	± 0.47	± 0.003	± 0.47	± 0.97

Over the entire study period, the average systematic uncertainty for a daily volume measurement, CV_b, was determined to be ± 0.43 percent and the average random uncertainty for a daily volume measurement, CV_r, was estimated to be ± 0.002 percent. Therefore, the average uncertainty in daily volume would then be ± 0.43 percent, and the average 95-percent confidence interval for the daily volume would be ± 0.90 percent.

C. Daily Uncertainty of Plant Use Components

Plant use is a collective term for the service and backwash metering and the rapid drawdown. As mentioned earlier, the plant use components account for a very small portion of the total volume that passes through the system. Typically, each plant use meter is used for only about one-half-hour each day. Therefore, the uncertainty of the plant used meters will be estimated on a daily, rather than hourly, basis.

The City provided a log sheet for the month of January 1998. This log sheet listed the daily volume that passed through each plant use meter. From this information, a rough estimate of the flow rate that passed through the plant use meters was obtained. For example, on January 1, 1998, the City reports that 0.153 MG passed through the East plant's 30-inch Dall flow tube. From discussions with officials in the City's Water and Sewer Department, it was discovered that these filters are backwashed in about one-half-hour. Using this information, it was assumed that all of the 0.153 MG passed through the 30-inch meter in one-half hour or that the flow rate was equal to 7.344 MGD.

The plant use component's accuracy, as discussed in Section 4, and specifications are summarized in Table 8. The backwash and surface water meters use the same type of pressure transmitters and calibration equipment as the 60-inch raw-water meter. Therefore, the methodology used *Equation Nos. (14)* through *(23)* for estimating the 60-inch raw-water meter's hourly flow uncertainties can be used to determine the backwash and surface water meter's daily uncertainties.

Table 8
Accuracy and Specifications of Plant Use Components

	East and West Surface Wash Water Meter	East Plant's Backwash Meter	West Plant's Backwash Meter	Rapid Drawdown
Meter type	6-inch Dall flow tube	30-inch Dall flow tube	20-inch Dall flow tube	N/A
Meter capacity	1.5 MGD	49.9 MGD	26.6 MGD	N/A
Throat area	0.125 ft^2	2.182 ft^2	1.116 ft^2	N/A
Beta	0.7965	0.6667	0.7153	N/A
Cd	0.63*	0.63*	0.63*	N/A
Accuracy	2.00% of actual flow	2.00% of actual flow	2.00% of actual flow	35.0 ft^3 (west) & 69.7 ft^3 (east)
Installation error	N/A	N/A	N/A	N/A

* *According to Miner (1956), the discharge coefficient, C_d, for a Dall tube with this β-ratio is about 0.63.*

The systematic and random uncertainties of the plant use components for January 1998 are provided in Appendix B.

D. Adjusted Raw-Water Uncertainty

Now that an average uncertainty for the raw-water meters and the plant use meters has been determined, an uncertainty for the adjusted raw-water can be estimated. The adjusted raw-water measurement is simply the difference between the raw-water measurement and the plant use measurements. Because the raw-water measurements and the plant use measurements are drastically different, their uncertainty estimates must be combined in such a way that takes this into account. Thus, the uncertainty of the raw and plant use water measurements must be combined on the basis of standard deviations and not relative uncertainty (i.e., coefficient of variation). To do this, *Equation Nos. (22)* through *(24)* must be used.

The random, systematic, and overall uncertainty was found for every day in January of 1998 using the average uncertainty values for the raw and plant use meters. The average adjusted daily volume pumped for the month of January 1998 was 42.053 MG. The average random uncertainty over this time period was ± 0.001 MG or 0.002 percent (i.e., ± 0.001 MG divided by 42.053 MG), while the average systematic uncertainty was ± 0.185 MG or ± 0.44 percent. The average combined uncertainty over this time period was also ± 0.185 MG or 0.44 percent in terms or relative uncertainty (CV). This implies that the 95-percent confidence limit, CI, for the adjusted raw water would be twice this value or ± 0.91 percent (± 0.44 times 2.069). This is almost exactly the same value of CI for the raw-water meters alone (± 0.90). Because the CV and CI values are almost the same for the raw water and the adjusted raw water, this supports the assumption that the plant use measurements have very little impact on the overall uncertainty of the adjusted raw-water measurements.

E. Uncertainty of Annual Volume Measurements

The uncertainty in the annual volume pumped through the station can be estimated using the estimated uncertainty in daily volume measurements for the raw-water meter. As mentioned earlier, the study period consisted of 1-week periods in February, May, and September of 1997. In total, there were 21 days in the study period. Over this time period, the average systematic uncertainty for a daily volume measurement, CV_b, was determined to be ± 0.43 percent (± 0.38 percent from unknown biases and ± 0.21 percent from unknown biases known to be in the same direction for all meters) and the average random uncertainty for a daily volume measurement, CV_r, was estimated to be ± 0.002 percent. The average uncertainty in daily volume would then be ± 0.43 percent, and the average 95-percent confidence interval for the daily volume is ± 0.90 percent. The uncertainty in the annual volume pumped through the Evanston plant, CV_V can be determined as follows:

$$CV_V = CV_{\substack{b_{direction} \\ known}} \pm \left(\frac{CV^2_{\substack{b_{direction} \\ unknown}}}{n} + CV^2_{\substack{b_{unknown} \\ but\ in\ same \\ direction}} + \frac{CV_r^2}{n} \right)^{\frac{1}{2}}$$

$$= \pm \left(\frac{0.38^2}{365} + 0.21^2 + \frac{0.002^2}{365} \right)^{\frac{1}{2}} = \pm 0.21\%$$

Equation (29)

The 95-percent confidence interval of the annual volume, CI_v, would then simply be ± 0.41 percent (±0.21 times 1.960). The 95-percent confidence interval for the annual volume (± 0.41 percent) is less than the 95-percent confidence interval for the daily volume (± 0.90 percent). Most of the random error and unknown bias error associated with the daily volume measurement is statistically canceled when determining the uncertainty of the annual volume.

6. Quality Assurance

If the water accounting system is moved to the lakefront, there is concern that if one of the direct diverter's flow measurement systems goes down, that there would be no way to measure the withdrawals from the lake. Thus, it is desirable that the direct diverters have a back-up measurement system and, if possible, some other independent check on the measurements to ensure that measurements are reasonable and accurate.

The City has a back-up flow measurement system for their raw-water meters. Presently, the signal from the Bristol Babcock pressure transmitter is fed into a RTU that calculates the flow rate. If there is a problem with that system, the signal from the pressure transmitter is also sent into a discriminator, summator, and totalizer. The output of the totalizer would then be used as the total flow that has passed through the meter. As previously mentioned, determining the flow using the RTU is more accurate than using the discriminator, summator, and totalizer system. For the 3-week study period, the two measurements differed by an average of 1.37 percent. Although there appears to be a slight bias between the two measurement systems, the discriminator, summator and totalizer system should still be a good backup system.

A potential problem is that there is no backup to the Bristol Babcock pressure transmitter. If the pressure transmitter goes down, then neither the RTU system nor the discriminator, summator, and totalizer system will work. The City does not have any backup pressure transmitters on-site. However, if the Bristol Babcock pressure transmitter fails and the flows are low enough, the raw water can be re-directed from the 60-inch Lo-Loss tube to the 48-inch Lo-Loss tube. If the flows are too high for the 48-inch tube to handle, the City can cannibalize a pressure transmitter from one of the finished water Lo-Loss tubes. There are three finished water Lo-Loss flow tubes and all three of these meters are not used at the same time. Thus, if the Bristol Babcock pressure transmitter fails, the City should be able to come up with a backup in a reasonable amount of time.

It would also be useful if there was some additional check that could be used as a warning if the raw-water flow measurement system began to malfunction. This can be done using the finished water meters. The finished water exiting the plant is measured in a manner similar to the raw water. Both the raw and finished water meters will have similar accuracies. The only difference between the two readings should be the returned plant use water and the backwash water lost to the system. The finished water meters and the raw-water meters should normally differ by about 1 to 2 percent. This can be used as a check for the raw-water measurement system. If the difference between the raw and finished water meters becomes greater than 2 percent, then this can be considered an indication that something may be wrong with one of the flow measurement systems. It would then be up to the City to determine why there was a larger than normal difference between the two metering systems.

7. Summary of Inadequacies in the Current Metering Systems

For the most part, the current metering system provided a reasonable level of accuracy and has acceptable quality assurance. There are few areas of the metering system that appear deficient.

- The actual venturi meters are not calibrated. Rather, the City assumes that the manufacturer's rating curves are correct. Calibration of the venturis would confirm or deny this assumption.

- No backup pressure transmitter exists for either the raw water or plant use meters. Should the pressure transmitter fail, all flow data associated with that transmitter could be lost.

- The overall accuracy in estimating the water supply pumpage is dependent on many measurement and analyses functions. The documented technical review and much previous work were focused on the accuracy of the pumpage measurements in hardware (i.e., meters, calibrator, pressure transmitter, etc.) and software (SCADA, etc.). This analyses does not take into account procedural errors such as inconsistent data in water supply pumpage as a result of the reporting mechanism.

8. Recommendations for Long-Term QA/QC and Improvements to Metering

Recommendations for long-term QA/QC and improvements to metering are as follows:

- Calibration of the venturi meters to determine if the manufacturer's rating curves are valid.

- Occasional inspection and measurement, if physically possible, of the inlet and throat of the venturi meters to determine any possible presence and effects of corrosion and tuberculation on the meter's accuracy.

- Installation of a manometer on the venturi tubes is recommended to provide a backup differential pressure reading that can be converted to a flow reading should the pressure transmitter fail. Otherwise, store a backup pressure transmitters at the plant, such that the malfunctioning pressure transmitter can be replaced in a short amount of time with the spare until the malfunctioning transmitter can be repaired or permanently replaced.

- Routine auditing of various water withdrawal reports, as part of the long-term QA/QC, as a means of accounting for procedural errors.

9. Conclusions

Some of the important conclusions are summarized below:

- For operational purposes, the City can determine an individual adjusted raw-water flow measurement to within about ± 3.67 percent. This takes into account the random and systematic uncertainty associated with the raw-water meters, the plant use meters, the pressure transmitter, and the calibration unit.

- On an annual basis, the total volume withdrawn from the lake can be determined to within approximately ± 0.41 percent. The bias with unknown direction but known to be in the same direction dominates the overall magnitude of 95-percent confidence interval for the annual volume, while the errors that can statistically cancel (i.e., random error and bias errors with unknown direction) provide only a small contribution.

- Because the amount of plant use water is small compared to the raw water, the accuracy of the plant use water meters has very little impact on the overall accuracy of the adjusted raw-water measurement.

- The City uses two different methods for calculating the flow. The pressure transmitter and remote terminal unit (RTU) system comprise the primary method. The pressure transmitter, discriminator, summator, and totalizer system comprise the secondary method. The primary method is more accurate than the secondary one. However, the secondary method can be used as an effective backup should a problem develop with the primary method.

- The finished-water meters (outflow from the plant) can be used as a check on the raw-water measurement system (inflow to the plant). The difference between these two meters should be the amount of returned plant use water plus the amount of water lost to the system. Normally, this difference should be around 1 to 2 percent. A difference greater than about 2 percent indicates that there may be a problem with one of the flow measurement systems.

References

American Society of Mechanical Engineers. Fluid meters: Their theory and application. ASME, New York, 5th ed., 203 p., 1959.

AMETEK. *The ModCal System*, Bulletin No.: DB-90HG/90JG (5M487A), December 1, 1986.

Bristol Babcock, *Specifications for the Signature Differential Pressure Transmitter*, n.d.

Cheremisinoff, Nicholas P. and Paul N. Cheremisinoff. *Flow Measurements for Engineers and Scientists*. Marcel Dekker, Inc., New York, 1988.

International Organization for Standardization. 1991. Measurements of Fluid Flows by Means of Pressure Differential Devices. ISO, Switzerland.

Miller, Richard W. Flow Measurement Engineering Handbook, McGraw-Hill, New York, NY; 15 chapters, 1996.

Miner, I.O. Dall Flow Tube. Transactions of the American Society of Mechanical Engineers, Vol. 78, No. 3, pp. 475-479, 1956.

Spitzer, David W. Industrial flow measurement. Instrument Society of America, Research Triangle Park, NC. 441 p., 1990.

Water Conservation Laboratory, *Technical Review of Lake Michigan Water Withdrawal by the City of Evanston*, April 1998.

Final Report

Technical Review of Lake Michigan Withdrawals Highland Park Water Treatment Plant City of Highland Park, Illinois

Prepared for:

U.S. Army Corps of Engineers – Chicago District
Chicago, Illinois

Prepared by:

MEAD & HUNT

June 2003

Table of Contents

Page

Executive Summary . . . . . E-i

1. General Description 1
   A. Summary of Operation 1
   B. Flow Measurement 1
   C. Flow Totalization 2
   D. Calibration 3

2. Uncertainty in Metering and Measurement Components 4
   A. Venturi-Type Meter 4
   B. Orifice Plate Meter 4
   C. Turbine Meter 5
   D. Pressure Taps 5
   E. Meter Installation 5
   F. Sampling 7
   G. Pressure Differential Measurement 7
   H. Turbine Meter's Transmitter 8
   I. Calibration of Pressure Transmitters 8
   J. Calibration of Turbine Meter 9
   K. SCADA System 9

3. Sample Uncertainty Calculation for Effluent Meters 10
   A. Uncertainty of Hourly Flow Measurements 10
      (1) Systematic (Bias) Error 10
      (2) Random Error 17
      (3) Combining Systematic and Random Errors 17
   B. Uncertainty of Daily Volume Measurements 20
   C. Uncertainty of Annual Volume Measurements 23

4. Quality Assurance 25

5. Summary of Inadequacies in the Current Metering System 26

6. Recommendations for Long-Term QA/QC and Improvements to Metering 27

List of Tables

Table		Page
1	Specifications for the Highland Park Plant's Finished Water Meters	2
2	Upstream Disturbances and Approximate Approach Lengths for the Various Venturi Meters at the Highland Park Plant	6
3	Calibrated Spans and URLs for the Effluent Venturi Meter and Orifice Plate	8
4	Uncertainty From the Pressure Transmitters and Calibration Equipment for the First Hourly Reading on September 1, 1998, for the Finished Water Meters	13
5	Absolute Bias Estimates for the First Hourly Readings Taken on September 1, 1998	15
6	Absolute Bias Estimates for the First Hourly Readings Taken on September 1, 1998	18
7	Estimated Uncertainties for Daily Volumes for the Entire Study Period	22

List of Appendices

Appendix

A Schematic of Highland Park Plant

B Finished Water Venturi Meter and Orifice Plate's Flow Versus Differential Pressure Curves

Executive Summary

Currently, diversion of water from Lake Michigan for the state of Illinois is measured at the Chicago Sanitary and Ship Canal at Romeoville. The Great Lakes Mediation Memorandum of Understanding established a lakefront diversion accounting system and specified a 3-year transition period to assess the technical acceptability of moving the diversion measurement system to the lakefront. A lakefront diversion accounting system requires metering of all domestic water withdrawals from Lake Michigan and the direct diversions into the Chicago Sanitary and Ship Canal system at the Chicago River, the Calumet River, and the North Shore Channel at Wilmette. During the 3-year transition period, the U.S. Army Corps of Engineers (USACE) has been tasked to initiate a technical review of the accuracy of the reported domestic withdrawals from Lake Michigan.

The USACE retained Mead & Hunt, Inc. to evaluate the accuracy of domestic withdrawals from Lake Michigan. A total of 12 pumping stations in the city of Chicago and six suburban pumping stations will be evaluated. These evaluations include revisions to the investigations conducted on the city of Chicago's Mayfair and Thomas Jefferson Stations, and the City of Evanston's Station by the Illinois District of the US Geological Survey. This report presents a summary of the flow measurement techniques at the Highland Park Water Treatment Plant (Highland Park Plant) as employed by the city of Highland Park (City), as well as estimates of the uncertainty of daily and annual volume measurements. Presently, the Highland Park Plant consists of a raw water venturi, internal plant metering (for the wash water, surface wash water and plant use) and three finished water meters.

To obtain an estimate of the uncertainty of an individual flow measurement, we examined the manufacturer's accuracy specifications for both the primary flow measurement devices (i.e., the venturi-type meters) and secondary measurement devices (i.e., the pressure transmitters). The Highland Park Plant's calibration technique, sampling technique, and device installation were also examined. All of the sources of uncertainty identified from this analysis were then classified as either random or systematic in nature. Using this information and the data logs provided by the City, we obtained an estimate of the uncertainty of an individual flow measurement. From this information, an estimate of the uncertainty of the daily and annual volume withdrawn from the lake can be obtained using standard statistical techniques.

Some of the important conclusions are summarized below:

- For operational purposes, the City can determine the hourly flow measurement reading to within + 0.21 ± 36.22 percent at the Highland Park Plant. This value takes into account the random and systematic uncertainty associated with the venturi meters, pressure transmitters,

calibration equipment, and recording system. Note, however, that this value is based on the assumption that the average daily flow is equal to each of the 24 hourly flows.

- On an annual basis, the total volume pumped through the plant can be determined to within +0.21 ± 32.09 percent. The 95-percent confidence interval for the annual volume is narrower than the 95-percent confidence interval for the hourly flow measurements made at the Highland Park Plant because the random and unknown bias errors associated with the measurement are statistically canceled when the measurements are summed over a year's time.

- The calibrator's diagram isolated module produces a significant portion of the metering systems uncertainty.

- With the exception of the SCADA system and transmitters, the metering system has redundancy or backup for quality assurance. There are no backup data recorders, totalizers or transmitters at this time.

- The raw water, with adjustments made for internal plant usage, wash water and surface wash water, can be compared to the finished water metering as an independent check of the flow measurement system. The difference between the raw water minus internal plant metering and the finished water metering should be less than two percent. A difference greater than two percent indicates there may be a problem within the flow measurement system.

Technical Review of
Lake Michigan Withdrawals
Highland Park Water Treatment Plant
City of Highland Park, Illinois

1. General Description

A. Summary of Operation

The Highland Park Water Treatment Plant's (Highland Park Plant) metering system consists of a raw water venturi, internal plant metering (for the wash water, surface wash water and plant use), and three finished water meters. The output signals from the primary elements are transmitted to a Supervisory Control and Data Acquisition System (SCADA) continuously. These output signals are used to derive hourly flow readings. Since the raw water, internal plant use water and finished water lines are all metered, there are several means to obtain readings should one of the primary elements or its transmitter fail. There are no backup recorders or totalizers at the Highland Park station. A schematic of the Highland Park Plant is provided in Appendix A.

B. Flow Measurement

Lake Michigan water intakes to the Highland Park plant are measured through the raw water venturi with adjustments made for internal plant usage, wash water and surface wash water. Should the raw water venturi's transmitters fail, finished water metering can be used as backup. Although the raw water venturi is typically used to measure Lake Michigan withdrawals at the Highland Park plant, an analysis of the finished water metering will be conducted since it is consistent with the overall goals of this study. The finished meters consist of a 30-inch venturi installed in 1929, a 24-inch orifice plate that was installed in 1960's, and a 24-inch Sparling turbine meter (on a 30-inch pipeline) which was installed in the late 1990's. Specifications of the three finished water meter are shown in Table 1.

Table 1
Specifications for the Highland Park Plant's Finished Water Meters

Meter Number	Primary Element Type	Manufacturer	Approach Pipe Diameter (in.)
FT103	Venturi Meter	Unknown	30
FT104	Orifice Plate	Unknown	24
FT105	Turbine Meter	Sparling Series 100 Turbine Meter	30

The manufacturer and geometry of the venturi and orifice plate meters are unknown. Therefore, the beta ratio and coefficient of discharge also are not known and the standard equations for flow through a venturi or orifice meter cannot be used to determine the relationship between the flow rate and differential pressure. As a substitute method for determining the flow versus differential pressure relationship, calibration curves, developed through field testing these two meters, will be used. The flow versus differential pressure curves are provided in Appendix B.

C. Flow Totalization

The City uses the raw water metering for their LMO-3 reporting. The finished water is calculated by subtracting the wash water, plant use water, and process water totals from the daily raw water total. Raw water data is reported rather than finished water data because the plant has little information on the finished water venturi and orifice plate. However, this study will analyze the uncertainty of the finished water metering since it is consistent with the overall goal of the USACE study.

The pressure differentials of the finished water's venturi meter and orifice plate are measured using dual Bristol Signature Model 322-211-100 pressure transmitters. Dual transmitters provide for an improved accuracy over a wide flow range. The output signal from the turbine meter is transmitted using a Sparling FT193-111-2 transmitter. The output signals from the transmitters are sent continuously to a Supervisory Control and Data Acquisition System (SCADA) located at the Highland Park plant. These output signals are first converted to an average minute flow value that is further averaged and stored every ten minutes. The final hourly flow rates recorded by the plant operator are based on averaging and totaling these ten minute averages over an hour's time .

The City does not record flow passing through each finished water meter. All three meters are generally operated except for the winter months when the turbine meter and one of the two differential meters are used. The flow breakdown among meters is dependent on pipe layout and geometry. Assuming that the upstream piping for each of the effluent meters is similar in length and roughness, the flows would

breakdown to approximately 34.5 percent, 30.1 percent, and 34.5 percent for the venturi, the orifice and the turbine meter, respectively, for the non-winter months. For the winter months, the flow split would be 50 percent and 50 percent for the venturi meter and the turbine meter, respectively, and 47.2 percent and 52.8 percent for the orifice meter and the turbine meter, respectively. These breakdowns of flow are based on the pipe diameter that the meters are installed on.

D. Calibration

In-house calibrations of pressure differentials for the venturi meter and orifice plate are performed by inducing a pressure with a hand pump and measuring the output from the transmitter using Transmation Instruments Calibrator. A four point calibration of these transmitters is conducted on a six month interval to ensure accuracy.

The manufacturer and geometry of the venturi meter and orifice plate are unknown. Therefore, the beta ratio and coefficient of discharge also are not known and the standard equations for flow through the venturi and orifice meters cannot be used to determine the relationship between the flow rate and differential pressure. Therefore, an outside consulting company tests the venturi meter and orifice plate approximately every two years to generate additional data points to refine the meters calibration curves.

Since the City does not use the effluent meters for the LMO reporting, they have not calibrated the effluent Sparling turbine meter. In conversations with technical support at Sparling, failure to calibrate the meter regularly should not affect the uncertainty of this turbine meter. Calibration is not required unless the turbine has been damaged or worn parts. Checking for these occurrences is outlined in the Sparling turbine meter's instruction manual.

2. Uncertainty in Metering and Measurement Components

A. Venturi-Type Meter

Since the manufacturer and the specifications of the 30-inch finished water venturi were not available, it was impossible to obtain accuracy information specific to this meter. Spitzer reports that classical venturi accuracy ranges from ±0.7 to ±1.5 percent depending on venturi construction. It is assumed that this percent is percent of flow, since this is typically how venturi accuracy is expressed. Since specific construction information for the 30-inch finished water meter is unknown, ±1.5 percent will be used since it is most conservative. This uncertainty is systematic in nature with a unknown bias direction.

Additionally, since the venturi has been in service for over 70 years, a possibility of wear, pitting and corrosion in critical areas exists. The 30-inch finished water meter has not been inspected, therefore the extent of wear, corrosion and tuberculation is unknown. However, the city of Chicago inspected one of their venturi meters at their Southwest Pumping Station and found that the only significant corrosion or tuberculation occurred on the inlet piping since the throat of the venturi is lined with bronze. Bronze is known for its ability to resist corrosion and formation of tubercles. Using the Southwest Station's findings and Stanley Peerman Hutton's methodology, the uncertainty due to wear, corrosion and tuberculation was determined to be negligible at the Southwest Station. Additional information on the findings at the Southwest Station are available in the *Technical Review of Lake Michigan–Southwest Pumping Station*. Since no specific information is available for Highland Park's 30-inch finished water meter, it is assumed that if the 30-inch venturi was inspected, the findings would be similar to those from the Southwest pumping station meter's inspection. Therefore, it is assumed that there is no additional uncertainty due to wear, corrosion or tuberculation.

B. Orifice Plate Meter

Since the manufacturer and the specifications of the 24-inch finished water orifice plate were not available, it was impossible to obtain accuracy information specific to this meter. According to Spitzer the accuracy of an orifice plate is typically in the range of ± 0.6 to ± 1.6 percent. It is assumed that this percent is percent of flow since this is typically how orifice plate accuracy is expressed. Since specific construction information for the orifice plate is unknown, ± 1.6 percent will be used since it is most conservative. This uncertainty is systematic in nature with a unknown bias direction.

Additionally, since the orifice has been in service for over 40 years, a possibility of wear of the orifice plate's bore and build-up of foreign material upstream and downstream of the plate is a possibility. Depending on the degree of wear or build-up, this occurrence could cause an additional bias to the

meter's accuracy. No quantitative number for uncertainty due to wear or build-up were available. However, Spitzer states that orifice plate wear is more significant for smaller pipe sizes than larger ones. Given the size of the finished water orifice plate, it is assumed that there is no significant error due to wear of the orifice's bore. Spitzer also states that "build-up can be avoided through selection of an orifice plate geometry that will alleviate this problem in applications where build-up is suspected." Therefore, it is assumed that an appropriate orifice plate was chosen for this application and there is no additional error due to build-up.

C. Turbine Meter

Turbine flow meters have a rotor submerged in the flow stream such that the rotational velocity of the rotor is proportional to the velocity of the fluid. The Sparling turbine meter at the Highland Park plant uses a magnetic sensing system. This sensing system uses a permanent magnet in the pickup, which results in voltage variations on the pickup coil. These voltage variations are proportional to the flow rate. Manufacturer specifications indicate an accuracy of ± 2 percent of rate for the Sparling turbine meter. Given that the meter is less than 5 years old, it is assumed that there is no additional uncertainty due to corrosion of the rotor or the piping. This uncertainty is systematic in nature with an unknown bias direction.

D. Pressure Taps

The pressure taps that are used to measure the pressure differential should be square with no roughness, burrs, or wire edges (Miller, 1996). If the pressure taps that are used do not meet these requirements, then a bias error would be introduced. It was not practical to inspect the pressure taps of these meters. The flow measurement devices were all constructed under a controlled manufacturing environment with very little opportunity for a pressure tap to be constructed poorly. Thus, we assumed that the manufacturer constructed the pressure taps correctly and that no additional error would be introduced due to the pressure taps.

E. Meter Installation

An appropriate minimum length of straight, circular pipe is required upstream of the flow meter to guarantee that the flow is fully established, the velocity profile entering the meter is not distorted, and that the meter will perform properly. For venturi and orifice meters, the required minimum length of this approach section depends on number and types of bends and fittings located upstream of the meter. At the Highland Park Plant, located 20 feet upstream of the venturi meter is a single bend and 14 feet upstream of this bend is another single bend. Whereas, located 18 feet upstream of the orifice meter is a single bend, and 8 feet upstream of this bend is a valve. Table 2 indicates the minimum pipe lengths,

as reported in ISO 5167-1:1991, required for both of these lengths of pipe given their upstream bends or fittings.

As shown in Table 2, for the 30-inch finished water meter, both the first and second upstream lengths of pipe are adequate to guarantee that the flow is fully established, the velocity profile entering the meter is not distorted, and that the meter will perform properly. However, for the orifice meter, the first and second lengths of straight pipe upstream of the meter do not meet these requirements. The first upstream length of straight pipe (18 feet) falls between the length required to produce zero error (28 feet) and the length required to produce a 0.5 percent error (14 feet). The second upstream length of pipe (8 feet) slightly exceeds the length required to produce a 0.5 percent error (10 feet).

Therefore the error for the first upstream length of pipe would fall between 0 and 0.5 percent while the error for the second upstream length of pipe would be slightly greater than 0.5 percent. Since the ISO 5167-1:1991 reference only provides the lengths of pipe for 0 and 0.5 percent error, it will be assumed that the total error due to the inadequate lengths of pipe upstream of the orifice meter will be 1.0 percent (0.5 percent for the first upstream length of pipe and 0.5 percent for the second upstream length of pipe). The inadequate pipe lengths will cause a distorted flow profile with little swirl at the orifice plate. No information was available for the bias direction for a distorted profile with little swirl. Miller reported that if a swirl was produced at the orifice meter, the flows tend to be over-reported Therefore, it is assumed that for this application the flows of a distorted flow profile without swirl will also be over-reported. Given this, the error will be +1.0 percent. This value is systematic in nature.

Table 2
Upstream Disturbances and Approximate Approach Lengths for the Various Venturi Meters at the Highland Park Plant

Meter	Pipe Reach	Upstream Fitting	Approach Length (feet)	Required Pipe Length for Zero Error (feet)	Required Pipe Length for 0.5 Percent Error (feet)
30-inch Venturi	First upstream length	single bend	20.0	10.0	3.8
	Second upstream length	single bend	14.0	5.0*	2.5*
24-inch Orifice	First upstream length	single bend	18.0	28.0	14.0
	Second upstream length	valve	8.0	20.0	10.0

** These values are based on a beta ratio of 0.7 as recommended by ISO 5167.*

Inadequate straight piping downstream of the meter can also affect the meter's accuracy. ISO 5167-1:1991 reference materials indicate that as long as the downstream length of straight piping exceeds four times the meter's throat diameter for a venturi meter or an orifice plate, no additional error is expected. Unlike for the upstream piping lengths, the ISO 5167-1:1991 reference does not indicate what length would be required to provide an uncertainty of 0.5 percent or any other uncertainty value. For the Highland Park Plant, the finished water venturi meter has a throat diameter of 1.67 feet (20 inches) and the finished water orifice meter has a throat diameter of 0.83 ft (10 inches). Given this, 6.7 and 3.3 feet of straight piping is required to insure no additional uncertainty due to the downstream piping installation for the venturi meter and orifice plate, respectively. The venturi meter has a downstream length of piping in excess of 20 feet and the orifice plate has approximable 6 feet of downstream piping. Therefore, the actual downstream piping requirements for both the venturi meter and the orifice plate exceed the minimum piping requirements for zero error.

Specifications for the Sparling turbine meter recommend a minimum of five straight pipe diameters upstream and one downstream of the meter. At the Highland Park plant, the turbine meter is housed in a 30 inch pipeline. Therefore, a minimum pipe length of 12.5 ft upstream and 2.5 ft downstream of the turbine meter is required. Sixteen and one-half feet of straight pipe is located upstream and 11.5 feet of pipe is located downstream of the turbine meter. Given this, the Sparling turbine meter's installation is adequate and there is no additional error due to installation.

F. Sampling

Additional uncertainty can also be introduced due to how the flow measurement data is recorded. If, for example, a quantity varies sinusoidally, but that quantity is only measured at the times when the quantity is at a peak, then the average measurements will be higher than the true average. This would introduce a bias into the system. On the other hand, if a quantity is measured or sampled frequently, then there will be very little error introduced due to the sampling. The flow data at the Highland Park station are continuously sent to the SCADA system where it is first converted to an average minute flow value. Although the actual number of data points used in the minute flow average is not defined, it can be assumed that they are numerous enough to ensure that the sampling uncertainty should be negligible.

G. Pressure Differential Measurement

The pressure differentials of the venturi meter and the orifice plate are measured using dual or "stacked" Bristol Babcock pressure transmitters. Two pressure transmitters per meter allow for greater accuracy over an extended flow range. In this application, one transmitter is used for flow ranges of 8 MGD or less and another is used for flow ranges of 8 MGD and greater. Based on the manufacturer's specifications, these pressure transmitters have an accuracy of ± 0.1 percent of calibrated span. Additionally, the stability is ± 0.25 percent of URL per year and the temperature effect is ± 0.01 percent

of URL per degree F for a temperature range from -25 to 75 degrees F. It is assumed that the effluent water has a similar temperature to that of the lake which varies from about 32 to 70 degrees F. This is approximately a 40-degree F temperature range. The calibrate spans and URL for the transmitters connected to the venturi meter and orifice plate are provided in Table 3.

Table 3
Calibrated Spans and URLs for the Effluent Venturi Meter and Orifice Plate.

Operating Range	Effluent Venturi Meter		Effluent Orifice Plate	
	Calibrated Span*, inches of water	URL**, inches of water	Calibrated Span*, inches of water	URL**, inches of water
Less than 8 MGD	22	100	16	100
Greater than 8 MGD	205	300	36	100

* *The computer input destinations where 0 to 12 MGD and 0 to 18 MGD for the orifice meter and 0 to 12 MGD and 0 to 24 MGD for the venturi meter for their low end and high end transmitters, respectively. The calibrated spans were estimated by determining the corresponding differential pressure to the high value of each of the computer input destinations using the orifice and venturi meter's flow versus differential pressure curves.*

** *The URL's were assumed based on the pressure transmitter's calibrated span and the manufacturer specifications.*

H. Turbine Meter's Transmitter

The output signal from the Sparling Turbine meter is transmitted using a FT193 mechanical totalizer with 4 to 20 mA and scaled pulsed output. The accuracy of the 4 to 20 mA output is ±0.5 percent scale. It is assumed that full scale is 20 mA which corresponds linearly with the maximum flow rate of the meter, 15 MGD. This uncertainty is systematic in nature with an unknown bias direction.

I. Calibration of Pressure Transmitters

The pressure transmitter for the venturi meter and orifice plate are calibrated every six months using a hand pump and a Transmation Instruments Pressure Flexitester 1090 Calibrator. Per conversations with technical support at Transmation, there are two uncertainty components one for the pressure reading and the other for the diagram isolated module. The pressure reading has an uncertainty of 0.01 percent actual reading. The accuracy of the diagram isolated module is 0.05 percent scale. In this application, full scale is 830.0 inches of water. Note, however, that the two parameters of the calibrator (accuracy of the pressure module and accuracy of the diagram isolated module) may not be totally uncorrelated since the pressure transmitter converts a physical measurement, the pressure, into an electrical signal while the diagram isolated module's output appears to be correlated to the pressure from the pressure module. Although, these parameters may not be totally uncorrelated, it was not

accounted for in this analysis. These errors are systematic in nature. Although the bias direction in unknown, it will be in the same direction for both meters.

J. Calibration of Turbine Meter

Since the City does not use the effluent meters for the LMO reporting, they have not calibrated the effluent turbine meter. In conversations with technical support at Sparling, failure to calibrate the meter regularly should not affect the uncertainty of this turbine meter. Calibration is not required unless the turbine has been damaged or worn parts. Checking for these occurrences is outlined in the Sparling turbine meter's instruction manual. Therefore, it is assumed that City has checked for damage and wear and has found no occurrences. No additional uncertainty due to calibration of the turbine meter will be included in this analysis.

K. SCADA System

In order for the SCADA system to determine the volume pumped through the Highland Park plant, the analog signal from the transmitters must be converted to a digital signal. This is performed using a Bristol Babcock 3380 Remote Transfer Unit (RTU). The accuracy of this RTU is 0.1 percent of 4 to 20 mA span at 77 degrees F and 0.2 percent of 4 to 20 mA span for a temperature range of 32 to 140 degrees F. Since the water temperature varies, the accuracy value of 0.2 percent of 4 to 20 mA span will be used in the uncertainty calculations. This error is random in nature.

3. Sample Uncertainty Calculation for Effluent Meters

To demonstrate how the uncertainty of the measured volume pumped through the Highland Park Station was estimated, a series of sample calculations follows. The method used to estimate the uncertainty is similar to that described in the *Technical Review of Lake Michigan Water Withdrawal by the City of Evanston*. Please refer to this document for background on the statistical handling of measurement uncertainty. The City provided the daily logs of three, two-week periods. No hourly flow data was available for the Highland Park Station. These time periods were the first 14 days in September 1998, and February and May 1999. It was assumed that the Highland Park's pumpages over these time periods were representative of the typical pumpages. Flow data was not available for each individual finished water meter, therefore the flow data was split among the three meters in the manner discussed in Section 1.C. of this report. The uncertainty of the daily readings can be obtained using these assumptions. The uncertainties can be reported as the standard deviation of the measurements (expressed by the variable *s*) or in relative terms (expressed by the variable *CV*, which is the standard deviation of the measurements divided by the mean of the measurements).

A. Uncertainty of Hourly Flow Measurements

Hourly flow measurements were not available. However, to provide some idea of the uncertainty of the meter's hourly flow measurements, it will be assumed that every hourly flow rate for a given date in the study period will be equal to its average daily flow rate.

(1) Systematic (Bias) Error

The majority of the error components are systematic in nature. These systematic errors include error from the venturi and the orifice, inadequate approach length, the pressure transmitters (accuracy, stability and temperature effect), and the calibration equipment. To determine the uncertainty of the hourly flow measurements, all uncertainties need to be in terms of percent accuracy of actual flow rate. The errors associated with the venturi, orifice plate and the inadequate approach lengths are already expressed in these terms. However, the accuracy associated with the pressure transmitters and calibration equipment are in terms of percent accuracy of calibrated span, upper range limit (URL) or full scale (FS); or of actual pressure reading.

The standard equation for the flow through a differential pressure meter (i.e. venturi or orifice) meter is:

$$Q = \frac{C_d A_t}{\sqrt{1-\beta^4}} \sqrt{2g\Delta h} \qquad \textit{Equation (1)}$$

where Q is the flow rate, C_d is the discharge coefficient, A_t is the area of the throat section, β is the ratio of the throat diameter to the approach section diameter (also referred to as the beta ratio), g is the acceleration due to gravity, and Δh is the pressure differential across the meter. No manufacturer's specifications were available for the venturi meter or orifice plate, hence, these meter's beta ratios and discharge coefficients are unknown. Typically, Equation (1) would be used to determine the differential pressure across each meter. However, since this is not possible and the City of Highland Park has established flow versus differential pressure curves for both the venturi meter and the orifice plate, these curves will be used to estimate the differential pressure at a given flow. These regression curves would have an uncertainty associated with them; however, this uncertainty has not been quantified to be included in this analysis. These curves are available in Appendix B.

Note that the model assumes that the discharge coefficient, throat area, and throat to approach diameter ratio (i.e. β-ratio) introduce no errors to the discharge calculations. That is, the differential pressure head of the venturi or orifice meter is the only source of error or uncertainty.

For instance, the average daily flow for September 1, 1998, was reported as 15.5 MGD, with approximately 5.35 MGD, 4.80 MGD and 5.35 MGD flowing through the venturi meter, orifice plate and turbine meter, respectively. Based on the flow versus differential pressure curves, the corresponding differential pressures for the venturi meter and orifice plate are 1.61 and 2.52 inches of water, respectively. The turbine meter produces an electrical signal rather than a pressure differential, therefore this step is not required for the turbine meter.

The pressure differentials of the venturi meter and the orifice plate are measured using dual or "stacked" Bristol Babcock pressure transmitters. In this application, one transmitter is used for flow ranges of 8 MGD or less and another is used for flow ranges of 8 MGD and greater. Based on the manufacturer's specifications, these pressure transmitters have an accuracy of ± 0.1 percent of calibrated span, a stability is ± 0.25 percent of URL per year and a temperature effect is ± 0.01 percent of URL per degree F for a temperature range from -25 to 75 degrees F.

The venturi's average daily flow of 5.35 MGD is less than 8 MGD, therefore a calibrated span of 21.9 inches of water will be used to determine the uncertainty of the pressure transmitter's accuracy. Give this, the uncertainty in the pressure differential measurement due to accuracy would be ± 0.0219 inches of water (i.e., ± 0.001 times 21.9) for the venturi meter. The uncertainty in the flow rate due to the accuracy of the pressure transmitter for the venturi meter would then be:

$$CV_{Qa} = \frac{Xs_p}{\Delta h} = \frac{(0.5)(\pm 0.0219in)}{1.61in} = \pm 0.680\% \qquad \textit{Equation (2)}$$

where CV_{Qa} is the uncertainty in the flow rate due to the accuracy of the pressure transmitter, s_p is an uncertainty in the pressure transmitter (due to transmitter accuracy in this case), X is the sensitivity coefficient equal to 0.5 for the pressure transmitter as the flow is directly proportional to the square root of the pressure differential in Equation (1), and Δh is the pressure differential. See *Technical Review of Lake Michigan Water Withdrawals by the City of Evanston* for additional information on the sensitivity coefficient, X. Using the methodology in Equation (2), the uncertainty in the flow rate due to the transmitter's accuracy stability, and temperature effect for the venturi meter and the orifice plate is summarized in Table 4.

The output signal from the Sparling Turbine meter is transmitted using a FT193 mechanical totalizer with 4 to 20 mA and scaled pulsed output. The accuracy of the 4 to 20 mA output is ± 0.5 percent of full scale. It is assumed that full scale of 20 mA is equal to the maximum flow rate of the meter or 15 MGD. Thus, the uncertainty in the turbine meter's transmitter due to accuracy would be ± 0.075 MGD (i.e., ± 0.005 times 15) for the venturi meter. The uncertainty in terms of percent of actual flow rate for the turbine meter is calculated as follows:

$$CV_{Qa} = \frac{s_q}{Q_a} = \frac{(1.0)(\pm 0.075\ MGD)}{5.35MGD} = \pm 1.402\% \qquad \textit{Equation (3)}$$

Where Q_a is the hourly flow through the turbine meter and s_q is the uncertainty of the turbine meter's transmitter. Note that the sensitivity coefficient, X, is 1.0 since the amperage is known to be directly proportional to the flow rate.

The pressure transmitter for the venturi meter and orifice plate are calibrated using a Transmation Instruments Pressure Flexitester 1090 Calibrator. There are two uncertainty components, one for the pressure reading and the other for the diagram isolated module. The pressure reading has an uncertainty of 0.01 percent of the actual reading. The accuracy of the diagram isolated module is 0.05 percent of full scale. In this application, full scale is 830.0 inches of water.

Thus, the uncertainty of the diagram isolated module would be ± 0.415 inches of water (i.e., ± 0.0005 times 830.0) for both the venturi meter and the orifice plate. The uncertainty in the flow rate due to the diagram isolated module for the venturi meter would then be:

$$CV_{Qa} = \frac{Xs_p}{\Delta h} = \frac{(0.5)(\pm 0.415in)}{1.61in} = \pm 12.89\% \qquad \textit{Equation (4)}$$

The pressure reading's uncertainty is reported as ± 0.01 percent of actual reading.. Thus, the uncertainty in the pressure reading would be ± 0.000161 inches of water (i.e., ± 0.0001 times 1.61) for the venturi meter. The uncertainty in the flow rate due to the pressure reading of the calibrator for the venturi meter would then be:

$$CV_{Qa} = \frac{Xs_p}{\Delta h} = \frac{(0.5)(\pm 0.000161 in)}{1.61 in} = \pm 0.005\% \qquad \textit{Equation (5)}$$

This process was repeated for Pressure Flexitester 1090 Calibrator accuracy for the orifice plate. A summary of these estimates appears in Table 4.

Table 4
Uncertainty From the Pressure Transmitters and Calibration Equipment for the First Hourly Reading* on September 1, 1998, for the Finished Water Meters**

Finished Water Meter	Instrument	Uncertainty Source	CV for Δh or ΔmA or ΔQ	URL, Calibrated or Pres. Reading Span	Uncertainty for Δh or ΔmA	CV for Flow (%)
30" Venturi	Bristol Babcock	Pressure transmitter	0.1% calibrated span	21.9 in. Water	0.0219 in. Water	± 0.680
	Bristol Babcock	Pressure transmitter	0.25% URL	100 in. Water	0.250 in. Water	± 7.764
	Bristol Babcock	Pressure transmitter	0.01% URL/100 °F	100 in. Water	0.004 in Water	± 0.124
	Transmation	Calibrator (pressure)	0.01% of pressure reading	1.61 in. Water	0.000161 in. Water	± 0.005
	Transmation	Calibrator (module)	0.05% FS	830.0 in Water	0.415 in Water	± 12.89
24" Orifice Plate	Bristol Babcock	Pressure transmitter	0.1% calibrated span	15.9 in. Water	0.0159 in. Water	± 0.315
	Bristol Babcock	Pressure transmitter	0.25% URL	100 in. Water	0.250 in. Water	± 4.960
	Bristol Babcock	Pressure transmitter	0.01% URL/100 °F	100 in. Water	0.004 in Water	± 0.079
	Transmation	Calibrator (pressure)	0.01% of pressure reading	2.52 in. Water	0.000252 in Water	±0.005

Table 4
Uncertainty From the Pressure Transmitters and Calibration Equipment for the First Hourly Reading* on September 1, 1998, for the Finished Water Meters**

Finished Water Meter	Instrument	Uncertainty Source	CV for Δh or ΔmA or ΔQ	URL, Calibrated or Pres. Reading Span	Uncertainty for Δh or ΔmA	CV for Flow (%)
	Transmation	Calibrator (module)	0.05% FS	830.0 in. Water	0.415 in Water	± 8.23
30" Turbine	Sparling	Transmitter	0.50% FS	15 MGD	0.075 MGD	± 1.402

****Note that the hourly reading is assumed to be equal to the average daily flow rate.*

In this study, the bias uncertainty estimates were broken down into three categories:

- Bias uncertainty with a known bias direction.
- Bias uncertainty with an unknown bias, but known to be in the same direction for each meter.
- Bias uncertainty with an unknown bias direction.

Explanation of this breakdown was detailed in the *Technical Review of Lake Michigan Water Withdrawal by the City of Evanston.* Table 5 lists the type of bias uncertainty for each of the bias estimates for the first hourly readings for the three finished water meters. Additionally, Table 5 also provides the absolute bias estimates for the first hourly readings taken from the three finished water meters based on the following equation:

$$s_b = CV_{flow} \cdot Q_{\substack{first \\ hour}} = \pm(0.00680)(5.35\,MGD) = \pm 0.036\,MGD \qquad \textit{Equation (6)}$$

where S_b is the standard deviation (or absolute uncertainty) of the flow measurement due to the respective systematic uncertainty estimate, CV_{flow} is the relative uncertainty in the flow rate and $Q_{first\ hour}$ is the flow for the first hour.

Table 5
Absolute Bias Estimates for the First Hourly Readings**
Taken on September 1, 1998

Meter	Bias Component	Type of Bias	CV_b(%)	S_b (MGD)
Venturi	Venturi			
	– *Manufacturer*	Direction unknown	± 1.500	± 0.080
	Approach lengths	N/A	N/A	N/A
	Pressure transmitters			
	– *Accuracy*	Direction unknown	± 0.680	± 0.036
	–*Stability*	Direction unknown	± 7.764	± 0.415
	– *Temperature*	Direction unknown	± 0.124	± 0.007
	Calibrator			
	– *Pressure*	Direction unknown,	± 0.005	± 0.0003
	– *Module*	but in same direction for all meters	± 12.89	± 0.690
Orifice Plate	Orifice Plate			
	– *Manufacturer*	Direction unknown	± 1.600	± 0.077
	Approach lengths	Direction known	+ 1.00	+ 0.048
	Pressure transmitters			
	– *Accuracy*	Direction unknown	± 0.315	± 0.015
	–*Stability*	Direction unknown	± 4.955	± 0.238
	– *Temperature*		± 0.079	± 0.004
	Calibrator			
	– *Pressure*	Direction unknown,	± 8.225	± 0.395
	– *Current*	but in same direction for all meters	± 0.005	± 0.0002
Turbine	Turbine			
	– *Manufacturer*	Direction unknown	± 2.000	± 0.107
	Approach lengths	N/A	N/A	N/A
	Transmitter			
	– *Accuracy*	Direction unknown	± 1.402	± 0.075

****Note that the hourly reading is assumed to be equal to the average daily flow rate.*

The systematic uncertainty estimates for the three finished water meters can be combined as shown below in *Equation (7)* to determine the overall hourly systematic uncertainty for September 1, 1998. To determine the uncertainty of the sum of the three measurements, the individual uncertainty estimates should be combined on the basis of absolute uncertainty (i.e., standard deviations) and not relative uncertainty (i.e., coefficient of variation).

$$S_b = \sum_{i=1}^{l_1}\sum_{j=1}^{m} S_{b_{ij\,\text{direction known}}} \pm \left[\sum_{i=1}^{l_2}\sum_{j=1}^{m} S^2_{b_{ij\,\text{direction unknown}}} + \sum_{i=1}^{l_3}\left(\sum_{j=1}^{m} S_{b_{ij\,\text{unknown but in same direction}}}\right)^2\right]^{\frac{1}{2}} \qquad \textit{Equation (7)}$$

Where:

S_b	=	Combined uncertainty or standard deviation of the flow measurement.
$S_{bij\ direction\ known}$	=	Absolute bias uncertainty of known direction for measurement *i,j*.
$S_{bij\ unknown\ but\ in\ same\ direction}$	=	Absolute bias uncertainty of unknown direction but known to occur in the same direction for each meter for measurement *i,j*.
$S_{bij\ direction\ unknown}$	=	Absolute bias uncertainty of unknown direction for measurement *i,j*.
m	=	The number of meters.
l_1, l_2, l_3	=	The number of uncertainty components in $S_{bij\ direction\ known}$, $S_{bij\ direction\ unknown}$, and $S_{bij\ unknown\ but\ in\ same\ direction}$, respectively.

For the first hour (assuming that every hourly flow rate for a given day is equal to its average daily flow for discussion purposes), using *Equation (6)*, the overall absolute bias uncertainty, S_b, was found to be +0.048 ± 1.197 MGD, which corresponds to a relative uncertainty, CV_b, of +0.31 ± 7.73 percent (i.e., 0.048 ± 1.197 MGD divided by the total flow rate of 15.494 MGD). This process was repeated for each average daily flow rate over the study period to give a rough estimate of the uncertainty of an hourly flow measurement. The results are provided in Table 6.

(2) Random Error

Only the SCADA uncertainty was identified as being random in nature. The manufacturer states that the SCADA's analog-to-digital conversion can take place with an accuracy of 0.2 percent of 4 to 20 mA span will be used in the uncertainty calculations. It is assumed that 20 mA is setup to correspond to each meter's maximum flow rate.

Given this, absolute random uncertainties due to the SCADA system would be ± 0.048 MGD (± 0.002 times 24 MGD), 0.036 MGD (± 0.002 times 18 MGD) and 0.030 MGD (±0.002 times 15 MGD) for the venturi meter, orifice plate and turbine meter, respectively. The relative uncertainty estimate for the SCADA system is determine by dividing the absolute random uncertainty by each meter's hourly flow rate or ± 0.898 percent , ± 0.750 percent, and ± 0.561 percent for the venturi meter, orifice plate and turbine meter, respectively.

The overall absolute random uncertainty, S_r, can be determined by combining the absolute random uncertainties due to the SCADA system for all three finished water meters using the root-mean-square method. The method results in an overall random uncertainty of ± 0.067 MGD or a relative random uncertainty, CV_r, of ± 0.433 percent (i.e., ± 0.067 MGD divided by 15.5 MGD). This process was repeated for each average daily flow rate over the study period to give a rough estimate of the uncertainty of an hourly flow measurement. The results are provided in Table 6.

(3) Combining Systematic and Random Errors

The systematic and random errors can be combined using the following methodology:

$$S_b = \sum_{i=1}^{l_1}\sum_{j=1}^{m} S_{b_{ij\,\text{direction known}}} \pm \left[\sum_{i=1}^{l_2}\sum_{j=1}^{m} S^2_{b_{ij\,\text{direction unknown}}} + \sum_{i=1}^{l_3}\left(\sum_{j=1}^{m} S_{b_{ij\,\text{unknown but in same direction}}}\right)^2 + \sum_{i=1}^{l_4}\sum_{j=1}^{m} S^2_{r_{ij}}\right]^{\frac{1}{2}}$$

Equation (8)

Where:

S_{rij}	=	Absolute random uncertainty.
l_4	=	The number of uncertainty components in S_{rij}.

Using *Equation (8)*, the overall uncertainty of the sum of the three flow measurements made in the first hour of September 1, 1998 assuming that the hourly flow equals the average daily flow is +0.048 ± 1.200 MGD, or an overall relative uncertainty, *CV*, +0.31 ±7.74 percent.

If hourly flow data was available, this process would be repeated for each of the 24-hour readings taken during the day. However, only daily average flows were available so to provide some indication of the accuracy of the hourly flow values, the average daily flow was assumed to be equal to each of the 24 hourly flow values. These results over the study period can be seen in Table 6. Over the entire study period, the average uncertainty of an hourly flow measurement, *CV*, was also found to be +0.21 ± 18.48 percent. The average 95-percent confidence interval of an hourly flow measurement, *CI*, would then be equal to +0.21 ± 36.22 percent (+0.21 ±[18.48 times 1.960[1]]).

Table 6
Absolute Bias Estimates for the First Hourly Readings**
Taken on September 1, 1998

Date	Total Flow (MGD)	CV_b (%)	S_b (MGD)	CV_r (%)	S_r (MGD)	Overall CV (%)
September 1	15.5	+0.31 ±7.73	+0.048±1.197	± 0.43	± 0.067	+0.31 ± 7.74
September 2	15.7	+0.31 ±7.42	+0.049 ±1.166	± 0.43	± 0.067	+0.31 ± 7.43
September 3	15.1	+0.31 ±8.37	+0.047 ±1.260	± 0.45	± 0.067	+0.31 ± 8.39
September 4	15.6	+0.31 ±7.53	+0.048 ±1.177	± 0.43	± 0.067	+0.31 ± 7.54
September 5	15.6	+0.31 ±7.64	+0.048 ±1.188	± 0.43	± 0.067	+0.31 ± 7.65
September 6	18.4	+0.31 ±4.85	+0.057 ±0.894	± 0.36	± 0.067	+0.31 ± 4.86
September 7	12.9	+0.31±12.99	+0.040 ±1.673	± 0.52	± 0.067	+0.31 ±13.00
September 8	13.2	+0.31 ±12.07	+0.041 ±1.595	± 0.51	± 0.067	+0.31 ±12.08
September 9	14.6	+0.31 ± 9.10	+0.045 ±1.329	± 0.46	± 0.067	+0.31 ± 9.11
September 10	14.4	+0.31 ± 9.45	+0.045 ±1.362	± 0.47	± 0.067	+0.31 ± 9.47
September 11	15.2	+0.31 ± 8.14	+0.047 ±1.238	± 0.44	± 0.067	+0.31 ± 8.16
September 12	16.4	+0.31 ± 6.58	+0.051 ±1.081	± 0.41	± 0.067	+0.31 ± 6.59
September 13	16.9	+0.31 ± 6.08	+0.052 ±1.029	± 0.40	± 0.067	+0.31 ± 6.09
September 14	13.7	+0.31 ±10.97	+0.042 ±1.500	± 0.49	± 0.067	+0.31 ±10.98
February 1	8.2	± 17.98	± 1.469	± 0.69	± 0.057	± 17.99
February 2	8.7	± 14.90	± 1.291	± 0.65	± 0.057	± 14.92
February 3	8.8	± 13.98	± 1.236	± 0.64	± 0.057	± 13.99

[1] A multiplier of 1.960 was used to determine the confidence interval since we are assuming that the average daily flow value is equal to the 24 hourly flow values and hence there would be a total of 1008 samples (42 days times 24 hours/day) used in determining the confidence interval.

Date	Total Flow (MGD)	CV_b (%)	S_b (MGD)	CV_r (%)	S_r (MGD)	Overall CV (%)
February 4	8.7	± 14.51	± 1.268	± 0.65	± 0.057	± 14.52
February 5	8.8	± 14.42	± 1.262	± 0.65	± 0.057	± 14.43
February 6	7.8	± 21.20	± 1.646	± 0.73	± 0.057	± 21.22
February 7	8.3	± 17.27	± 1.429	± 0.68	± 0.057	± 17.28
February 8	8.4	± 15.46	± 1.383	± 0.67	± 0.057	± 16.47
February 9	8.6	± 15.49	± 1.326	± 0.66	± 0.057	± 15.51
February 10	8.2	± 17.50	± 1.442	± 0.69	± 0.057	± 17.51
February 11	8.5	± 15.94	± 1.352	± 0.67	± 0.057	± 15.95
February 12	8.7	± 14.70	± 1.279	± 0.65	± 0.057	± 14.71
February 13	8.6	± 15.05	± 1.300	± 0.66	± 0.057	± 15.06
February 14	8.3	± 17.30	± 1.431	± 0.68	± 0.057	± 17.31
May 1	7.9	+0.31 ±55.53	0.024 ± 4.365	± 0.85	± 0.067	+0.31 ±55.54
May 2	9.5	+0.31 ±31.24	0.030 ± 2.976	± 0.70	± 0.067	+0.31 ±31.24
May 3	10.8	+0.31 ±21.71	0.033 ± 2.341	± 0.62	± 0.067	+0.31 ±21.72
May 4	10.7	+0.31 ±22.00	0.033 ± 2.361	± 0.63	± 0.067	+0.31 ±22.01
May 5	9.1	+0.31 ±35.31	0.028 ± 3.229	± 0.73	± 0.067	+0.31 ±35.32
May 6	10.5	+0.31 ±23.15	0.033 ± 3.441	± 0.64	± 0.067	+0.31 ±23.16
May 7	9.9	+0.31 ±27.97	0.031 ± 2.767	± 0.68	± 0.067	+0.31 ±27.98
May 8	8.3	+0.31±46.75	0.026 ±3.891	± 0.81	± 0.067	+0.31 ±46.76
May 9	9.1	+0.31 ±35.77	0.028 ± 3.256	± 0.74	± 0.067	+0.31 ±35.78
May 10	10.7	+0.31 ±22.11	0.033 ± 2.369	± 0.63	± 0.067	+0.31 ±22.12
May 11	10.4	+0.31 ±24.13	0.032 ±2.509	± 0.65	± 0.067	+0.31 ±24.14
May 12	9.6	+0.31 ±30.59	0.030 ± 2.935	± 0.70	± 0.067	+0.31 ±30.60
May 13	10.3	+0.31 ±25.17	0.032 ±2.580	± 0.65	± 0.067	+0.31 ±25.18
May 14	9.8	+0.31 ±28.56	0.030 ± 2.805	± 0.68	± 0.067	+0.31 ±28.57

B. Uncertainty of Daily Volume Measurements

An estimate of the uncertainty of the daily volume pumped through the station can be obtained from the 24 hourly flow measurements. Technically, 24 hourly flow values were not available in this study, but we are assuming that the average daily flow and each of the 24 hourly flow values for a day are equal. The volume pumped through the Highland Park Plant is the average of the 24 hourly flow measurements times one day. For September 1, 1998, the average volume pumped through the station is 15.5 million gallons (MG).

The uncertainty of the systematic daily volume measurements can be determined using the following equation:

$$CV_{Vb} = CV_{bV_{\substack{direction \\ known}}} + \frac{\Delta t}{m_v}\left(\sum_{k=1}^{n} Q_k^2 CV_{b_{k_{\substack{direction \\ unknown}}}}^2 + \left(\sum_{k=1}^{n} Q_k CV_{b_{k_{\substack{unknown \\ but\ in\ same \\ direction}}}}}\right)^2\right)^{\frac{1}{2}} \qquad \textit{Equation (9)}$$

Where:

CV_{Vb}	=	Relative uncertainty of the total bias volume measurement.
$CV_{bV\ direction\ known}$	=	Bias with known direction of the total volume measurement.
$CV_{bk\ direction\ unknown}$	=	Bias error in individual flow measurement *k* where the bias direction is unknown.
$CV_{bk\ unknown\ but\ in\ same\ direction}$	=	Bias error in individual flow measurement *k* where the bias direction is unknown, but in the same direction for all meters.
Δt	=	Time increment.
Q_k	=	Value of flow measurement.
m_V	=	Sum of all *n* volume measurements. In this case, the uncertainty of the measured volume can be expressed in relative terms because the terms Q_k and m_V take into account the magnitude of the individual measurements.

Using *Equation (9)*, the relative systematic error, CV_{Vb}, was +0.31 ± 7.03 percent for September 1, 1998.

The average random uncertainty component for the daily volume can be obtained from the following expression:

$$CV_{Vr} = \pm \frac{\Delta t}{m_v}\left(\sum_{k=1}^{n} Q_k^2 CV_{rk}^2\right)^{\frac{1}{2}}$$ *Equation (10)*

Where:

CV_{rk}	=	Random error in individual flow measurement *k*.
CV_{Vr}	=	Relative uncertainty of the volume measurement.

Using *Equation (10)*, the relative random uncertainty of the daily volume, CV_{vr}, for September 1, 1998, is ± 0.07 percent.

The overall uncertainty of the daily volume can then be found by combining the systematic and random uncertainty components in the following manner:

Equation (11)

$$CV_V = CV_{bV_{\substack{direction\\known}}} + \frac{\Delta t}{m_v}\left(\sum_{k=1}^{n} Q_k^2 CV_{b_{k_{\substack{direction\\unknown}}}}^2 + \left(\sum_{k=1}^{n} Q_k CV_{b_{k_{\substack{unknown\\but\ in\ same\\direction}}}}\right)^2 + \sum_{k=1}^{n} Q_k^2 CV_{r_k}^2\right)^{\frac{1}{2}}$$

For the date in question, the overall uncertainty of the daily volume, CV_V, was found to be +0.31 ± 7.03 percent, or +0.048 ± 1.090 MG (+0.31 ± 7.03 percent times 15.5 MG). The 95-percent confidence interval on the daily volume, CI_v, would then be +0.31 ± 14.54 percent[2] (+0.31 ±[7.03 times 2.069]). The average random, systematic, and overall uncertainty for each day in each two-week study period were found using the above method. A summary of the daily volume uncertainties for the September 1998 study period appears in Table 7.

---

[2] A multiplier of 2.069 was used to determine the confidence interval since we are assuming that each daily volume measurement is equal to the 24 hourly flow values and the confidence interval is based on these 24 samples.

Table 7
Estimated Uncertainties for Daily Volumes
for the Entire Study Period

Date	CV_{Vb} (%)	CV_{Vr} (%)	CV_V (%)	CI_V (%)
September 1	+0.31 ± 7.03	± 0.09	+0.31 ± 7.03	+0.31 ± 14.54
September 2	+0.31 ± 6.74	± 0.09	+0.31 ± 6.74	+0.31 ± 13.94
September 3	+0.31 ± 7.62	± 0.09	+0.31 ± 7.62	+0.31 ± 15.76
September 4	+0.31 ± 6.84	± 0.09	+0.31 ± 6.84	0.31 ± 14.15
September 5	+0.31 ± 6.94	± 0.09	+0.31 ± 6.94	+0.31 ± 14.36
September 6	+0.31 ± 4.36	± 0.07	+0.31 ± 4.36	+0.31 ± 9.02
September 7	+0.31 ± 11.83	± 0.11	+0.31 ± 11.83	+0.31 ± 24.47
September 8	+0.31 ± 10.99	± 0.10	+0.31 ± 10.99	+0.31 ± 22.75
September 9	+0.31 ± 8.28	± 0.09	+0.31 ± 8.28	+0.31 ± 17.14
September 10	+0.31 ± 8.61	± 0.10	+0.31 ± 8.61	+0.31 ± 17.81
September 11	+0.31 ± 7.41	± 0.09	+0.31 ± 7.41	+0.31 ± 15.33
September 12	+0.31 ± 5.97	± 0.08	+0.31 ± 5.97	+0.31 ± 12.35
September 13	+0.31 ± 5.51	± 0.08	+0.31 ± 5.51	+0.31 ± 11.39
September 14	+0.31 ± 9.99	± 0.10	+0.31 ± 9.99	+0.31 ± 20.67
February 1	± 15.44	± 0.14	± 15.44	± 31.95
February 2	± 12.79	± 0.13	± 12.79	± 26.46
February 3	± 11.99	± 0.13	± 11.99	± 24.80
February 4	± 12.44	± 0.13	± 12.44	± 25.74
February 5	± 12.37	± 0.13	± 12.37	± 25.59
February 6	± 18.23	± 0.15	± 18.23	± 37.73
February 7	± 14.83	± 0.14	± 14.83	± 30.69
February 8	± 14.13	± 0.14	± 14.13	± 29.24
February 9	± 13.29	± 0.13	± 13.30	± 27.51
February 10	± 15.03	± 0.14	± 15.03	± 31.10
February 11	± 13.68	± 0.14	± 13.68	± 28.31
February 12	± 12.61	± 0.13	± 12.61	± 26.09
February 13	± 12.91	± 0.13	± 12.91	± 26.72

Date	CV_{Vb} (%)	CV_{Vr} (%)	CV_V (%)	CI_V (%)
February 14	± 14.86	± 0.14	± 14.86	± 30.74
May 1	+0.31 ± 49.95	± 0.17	± 49.95	+0.31 ± 103.34
May 2	+0.31 ± 28.26	± 0.14	± 28.26	+0.31 ± 58.47
May 3	+0.31 ± 19.71	± 0.13	± 19.71	+0.31 ± 40.77
May 4	+0.31 ± 19.97	± 0.13	± 19.97	+0.31 ± 41.31
May 5	+0.31 ± 31.91	± 0.15	± 31.91	+0.31 ± 66.02
May 6	+0.31 ± 21.00	± 0.13	± 21.00	+0.31 ± 43.44
May 7	+0.31 ± 25.33	± 0.14	± 25.33	+0.31 ± 52.41
May 8	+0.31 ± 42.13	± 0.16	± 42.13	+0.31 ± 87.16
May 9	+0.31 ± 32.32	± 0.15	± 32.32	+0.31 ± 66.86
May 10	+0.31 ± 20.06	± 0.13	± 20.06	+0.31 ± 41.51
May 11	+0.31 ± 21.88	± 0.13	± 21.88	+0.31 ± 45.28
May 12	+0.31 ± 27.68	± 0.14	± 27.68	+0.31 ± 57.27
May 13	+0.31 ± 22.82	± 0.13	± 22.82	+0.31 ± 47.21
May 14	+0.31 ± 25.86	± 0.14	± 25.86	+0.31 ± 53.50

C. Uncertainty of Annual Volume Measurements

The uncertainty in the annual volume pumped through the station can be estimated using the estimated uncertainty in daily volume measurements. As mentioned earlier, the study period consisted of two-week periods in September 1998, and February and May of 1999. In total, there were 42 days in the study period. Over this time period, the average systematic uncertainty for a daily volume measurement, CV_b, was determined to be +0.21 ± 16.47 percent (± 1.73 percent from unknown biases and ± 16.37 percent from unknown biases known to be in the same direction for all meters) and the average random uncertainty for a daily volume measurement, CV_r, was estimated to be ± 0.12 percent. The average uncertainty in daily volume would then be +0.21 ± 16.47 percent, and the average 95-percent confidence interval for the daily volume would be +0.21 ± 34.08 percent. The uncertainty in the annual volume pumped through the Highland Park Plant, CV_V can be determined as follows:

$$CV_V = CV_{b_{\substack{direction \\ known}}} \pm \left(\frac{CV^2_{b_{\substack{direction \\ unknown}}}}{n} + CV^2_{b_{\substack{unknown \\ but\ in\ same \\ direction}}} + \frac{CV_r^2}{n} \right)^{\frac{1}{2}}$$

$$= +0.21 \pm \left(\frac{1.73^2}{365} + 16.37^2 + \frac{0.12^2}{365} \right)^{\frac{1}{2}} = +0.21 \pm 16.37\%$$

Equation (12)

The 95-percent confidence interval of the annual volume, CI_v, would then simply be +0.21 ± 32.09 percent (+0.31 ± 16.37 times 1.960]). The 95-percent confidence interval for the annual volume (+0.21± 32.09 percent) is slightly less than the 95-percent confidence interval for the daily volume (+021 ± 34.08 percent). Most of the random error and unknown bias error associated with the daily volume measurement is statistically canceled when determining the uncertainty of the annual volume. However, since a large portion of the error is due to the calibration equipment used to calibrate the venturi meter and orifice plate and this error is has an unknown direction that is known to be in the same direction for both the venturi meter and the orifice plate, the overall error remains high even though the random and unknown bias errors cancel out.

4. Quality Assurance

If the water accounting system is moved to the lakefront, there is a concern that if one of the direct diverter's flow measurement systems goes down, that there would be no way to measure the withdrawals from the lake. Thus, it is desirable that the direct diverters have a backup measurement system and, if possible, some other independent check on the measurements to ensure that the measurements are reasonable and accurate.

The output signals from the primary elements are transmitted to a Supervisory Control and Data Acquisition System (SCADA) continuously. These output signals are used to derive hour flow readings. Since the raw water, internal plant use water and finished water lines are all metered, there are several means to obtain readings should one of the primary elements or its transmitter fail. There are no backup transmitters, recorders or totalizers at the Highland Park station.

The raw water, with adjustments made for internal plant usage, wash water and surface wash water, can be compared to the finished water metering as an independent check of the flow measurement system used at the Highland Park Plant.

5. Summary of Inadequacies in the Current Metering System

The following areas of the metering system which appear deficient.

- No backup data recorders exists. Should the SCADA system fail, all flow data at the Highland Park Plant is lost.

- The accuracy of the diagram isolated module is 0.05 percent of full scale. In this application, full scale is 830.0 inches of water. The pressure produced through the finished water venturi and orifice plate is considerably lower than 830.0 inches of water causing a high level of uncertainty. The stability of the pressure transmitters have a similar effect, although to a slightly lesser extent, as the diagram isolated module and therefore also contributes to a high level of uncertainty.

- No manufacturer information for the Venturi meter or the Orifice Meter was available.

- These regression curves developed for the venturi meter and the orifice meter have an uncertainty associated with them. However, this uncertainty was not quantified to be included in this analysis.

- The overall accuracy in estimating the water supply pumpage is dependent upon many measurement and analysis functions. The documented technical review and much previous work were focused on the accuracy of the pumpage measurements in hardware (i.e., meters, calibrator, pressure transmitter, etc.) and software (SCADA, etc.). This analyses does not take into account procedural errors such as inconsistent data in water supply pumpage as a result of the reporting mechanism.

6. Recommendations for Long-Term QA/QC and Improvements to Metering

Recommendations for long-term QA/QC and improvements to metering are as follows:

- Occasional inspection and measurement, if physically possible, of the inlet and throat of the venturi meters to determine any possible presence and effects of corrosion and tuberculation on the meter's accuracy.
- Installation of a backup recording devices.
- Replace current calibration equipment with equipment that is better suited for the pressure differentials created by the venturi meter and orifice plate.
- To better account for the uncertainty of the flow-versus-differential pressure rating curves for the finished water venturi meter and orifice plate, the uncertainty of the regression equations should be further investigated and quantified.
- Routine auditing of various water withdrawal reports, as part of the long-term QA/QC, as a means of accounting for procedural errors.

7. Conclusions

Some of the important conclusions are summarized below:

- For operational purposes, the City can determine the hourly flow measurement reading to within +0.21 ± 36.22 percent at the Highland Park Plant. This value takes into account the random and systematic uncertainty associated with the venturi meters, pressure transmitters, calibration equipment, and recording system. Note, however, that this value is based on the assumption that the average daily flow is equal to each of the 24 hourly flows.

- On an annual basis, the total volume pumped through the plant can be determined to within +0.21 ± 32.09 percent. The 95-confidence interval for the annual volume is narrower than the 95-percent confidence interval for the hourly flow measurements made at the Highland Park Plant because the random and unknown bias errors associated with the measurement are statistically canceled when the measurements are summed over a year's time.

- The calibrator's diagram isolated module and the pressure transmitter's stability effects produce a significant portion of the metering systems uncertainty.

- The annual withdrawal volume can have an uncertainty as large as 32 percent on the 95th percentile based on the current analysis, excluding the source identified in item 3. This level of uncertainty is unacceptable. Taking into account the facts of lack of manufacturer's specification and poor accuracy of the pressure transmitter, replacing the flow meters at this pumping station appears the logical solution to improve the measurement accuracy. On the annual average, City of Highland Parks withdraws about 11 MGD (or 17 cfs) out of about 1,100 MGD (1,700 cfs) total Lake withdrawal, i.e., 1 percent of the total withdrawal.

- With the exception of the SCADA system and transmitters, the metering system has redundancy or backup for quality assurance. There is no backup data recorders, totalizers or transmitters at this time.

- The raw water, with adjustments made for internal plant usage, wash water and surface wash water, can be compared to the finished water metering as an independent check of the flow measurement system. The difference between the raw water minus internal plate metering and the finished water metering should be less than 2 percent. A difference greater than 2 percent indicates there may be a problem within the flow measurement system.

References

American Society of Mechanical Engineers, *Fluid Meters: Their Theory and Application*. ASME, New York, 6th ed., 1971.

Bristol Babcock, *Specification Summary–Signature 2808-35A Low Power Differential Pressure Transmitter*, March 2000.

Bristol Babcock, "Bristol Babcock 3380 RTU Specification." No date provided.

City of Highland Park, "1992-97 30-inch Fin. Venturi Composite" (Calibration curve).

City of Highland Park, "1992-97 24-inch Orifice Composite" (Calibration curve).

Hutton, Stanley P, *The Prediction of Venturi-Meter Coefficients and Their Variation with Roughness and Age.*

International Organization for Standardization, *Measurements of Fluid Flows by Means of Pressure Differential Devices*, ISO, Switzerland, 1991.

Mead & Hunt, Inc., *Technical Review of Lake Michigan Water Withdrawals by the City of Evanston–Draft*, July 2002.

Mead & Hunt, Inc., *Technical Review of Lake Michigan Withdrawals – Southwest Pumping Station*, July 2002.

Miller, Richard W., *Flow Measurement Engineering Handbook*, McGraw-Hill, New York, 1996.

Sparling Instruments, *Indicators/Totalizers–FT190/FT191*. No date provided.

Sparling Instruments, *Submittal Certification–Propeller Flowmeters*, August 21, 1997.

Sparling Instruments. Telephone conversation between Paul Sando of Sparling Instruments and Nicole Grossen of Mead & Hunt, Inc. regarding calibration requirements of the Sparling Series 100 Turbine Meter.

Spitzer, David W., *Industrial Flow Measurement*. Instrument Society of America, North Carolina, 1990.

Transmation, Inc. Telephone Conversation between Technical Support at the Transmation, Inc. and Nicole Grossen of Mead & Hunt, Inc. regarding the accuracies of the Diaphragm Isolated Module and Model 1090 Pressure Flexitester, March 5, 2001.

Final Report

Technical Review of Lake Michigan Withdrawals Northbrook Water Treatment Plant Village of Northbrook, Illinois

Prepared for:

U.S. Army Corps of Engineers – Chicago District
Chicago, Illinois

Prepared by:

MEAD & HUNT

June 2003

Table of Contents

Page

Executive Summary . . . . . E-i

1. General Description 1
   A. Summary of Operation 1
   B. Flow Measurement 1
   C. Flow Totalization 2
   D. Calibration 3

2. Uncertainty in Metering and Measurement Components 4
   A. Venturi-Type Meters 4
   B. Magnetic Flow Meter 4
   C. Pressure Taps 5
   D. Meter Installation 5
   E. Sampling 6
   F. Pressure Differential Measurement 6
   G. Dry Calibration of Pressure Transmitters 7
   H. Dry Calibration of Krohne Electronics 8
   I. SCADA System 8

3. Sample Uncertainty Calculation for Effluent Meters 9
   A. Uncertainty of Hourly Flow Measurements 9
      (1) Systematic (Bias) Error 9
      (2) Random Error 17
      (3) Combining Systematic and Random Errors 18
   B. Uncertainty of Daily Volume Measurements 19
   C. Uncertainty of Annual Volume Measurements 23

4. Quality Assurance 24

5. Summary of Inadequacies in the Current Metering Systems 25

6. Recommendations for Long-Term QA/QC and Improvements to Metering 26

7. Conclusions 27

References 28

MEAD & HUNT

List of Tables

Table		Page
1	Summary of Venturi-Type Meter	2
2	Summary of Magnetic Meter	2
3	Upstream Disturbances and Approximate Approach Lengths for the 16-inch Finished Water Venturi Meter at the Northbrook Plant	6
4	Summary of Uncertainty Calculations to determine Percent of Flow for the Rosemount Pressure Transmitter and Wallace and Tierman Calibrator	12
5	Summary of Venturi Meters Systematic Uncertainty Components for the First Hour on September 1, 1998	13
6	Summary of Magnetic Meters Systematic Uncertainty Components for the First Hour on September 1, 1998	15
7	Summary of the Venturi and Magnetic Meters Random Uncertainty Components for the First Hour on September 1, 1998	17
8	Systematic, Random, and Overall Uncertainty Estimates for Hourly Flow Measurements Made on September 1, 1998	18
9	Estimated Uncertainties for Daily Volumes in September 1998 Study Period	21

List of Appendices

Appendix

A Schematic of Plant

Executive Summary

Currently, diversion of water from Lake Michigan for the state of Illinois is measured at the Chicago Sanitary and Ship Canal at Romeoville. The Great Lakes Mediation Memorandum of Understanding established a lakefront diversion accounting system and specified a three-year transition period to assess the technical acceptability of moving the diversion measurement system to the lakefront. A lakefront diversion accounting system requires metering of all domestic water withdrawals from Lake Michigan and the direct diversions into the Chicago Sanitary and Ship Canal system at the Chicago River, the Calumet River, and the North Shore Channel at Wilmette. During the 3-year transition period, the U.S. Army Corps of Engineers (USACE) has been tasked to initiate a technical review of the accuracy of the reported domestic withdrawals from Lake Michigan.

The USACE retained Mead & Hunt, Inc. to evaluate the accuracy of domestic withdrawals from Lake Michigan. A total of 12 pumping stations in the city of Chicago (City) and six suburban pumping stations will be evaluated. These evaluations include revisions to the investigations conducted on the City's Mayfair and Thomas Jefferson Stations and the city of Evanston's Station by the Illinois District of the US Geological Survey. This report presents a summary of the flow measurement techniques at the Northbrook Water Treatment Plant (Northbrook Plant) as employed by the Village of Northbrook (Village), as well as an estimate of the uncertainty of daily and annual volume measurements. Presently, the Northbrook Plant has two lakefront station meters, one plant influent meter, several plant process meters and two finished water meters. For this analysis we will analyze the finished water metering system.

To obtain an estimate of the uncertainty of an individual flow measurement, we examined the manufacturer's accuracy specifications for both the primary flow measurement devices (i.e., the venturi-type meters or magnetic meter) and secondary measurement devices (i.e., the pressure transmitters). The Northbrook Plant's calibration technique, sampling technique, and device installation were also examined. All of the sources of uncertainty identified from this analysis were then classified as either random or systematic in nature. Using this information and the data logs provided by the Village, we obtained an estimate of the uncertainty of an individual flow measurement. From this information, an estimate of the uncertainty of the daily and annual volume withdrawn from the lake can be obtained using standard statistical techniques.

Some of the important conclusions are summarized below:

- For operational purposes, the City can determine the hourly flow measurement reading to within ± 24.44 percent at the Northbrook Plant. This value takes into account the random and systematic uncertainty associated with the venturi meters, pressure transmitters, calibration equipment, and recording system.

- On an annual basis, the total volume pumped through the station can be determined to within ± 1.74 percent. The 95-confidence interval for the annual volume is narrower than the 95-percent confidence interval for the hourly flow measurements made at the Northbrook Plant because the random and unknown bias errors associated with the measurement are statistically canceled when the measurements are summed over a year's time.

- Low flows through the finished water venturi meter has a significant negative affect on the metering accuracy, especially for the hourly flow values.

- With the exception of a backup recorder for the finished water venturi meter, all the metering system has redundancy or backup for quality assurance.

- There is no independent check of the flow measurement system that can be used as an indicator when there is a problem within the system.

Technical Review of
Lake Michigan Withdrawals
Northbrook Water Treatment Plant
Village of Northbrook, Illinois

1. General Description

A. Summary of Operation

The intake from Lake Michigan that supplies the Northbrook Water Treatment Plant (Northbrook Plant) is split into two pipelines and includes two Krohne magnetic meters, a 24-inch and 30-inch. Between the lake and plant, there are four small water users who have withdrawn water. In recent years, however, these users, three golf courses and the County's Botanical Gardens, have reduced or stopped their withdrawals, which historically averaged about 0.6 million gallons per day (MGD). The influent water is metered at the plant with a 24-inch Krohne magnetic meter that is located downstream of these four diversions. Raw water then flows through one or more of three venturi meters into the purification plant. Wash water is recycled and metered before it reenters the system between the plant's 24 inch magnetic flow meter and three venturi meters. Finished water is distributed and metered through either a 16-inch Simplex venturi or a 30-inch Krohne magnetic flow meter. The accuracy analysis for this plant was performed on these two finished water meters which are also used for Northbrook's LMO-3 reporting. The plant has a Westinghouse control system that collects and records flow readings from the two finished water meters. Appendix A contains a general schematic of the Water Treatment Plant.

B. Flow Measurement

The finished water meters in the Northbrook Plant are a 16-inch Simplex Venturi and a 30-inch Krohne Magnetic meter. There are seven finished water pumps, five that discharge to the venturi meter, and two that discharge to the magnetic flow meter.

The 16-inch Simplex Venturi was installed in the early 1960s. The meter was specified for a flow range of 0-11.5 MGD of water, 80 inches water column (WC) maximum differential, and permanent head loss not to exceed 10 inches of WC. This Simplex venturi tube is a proprietary variation of the classical Herschel-type venturi meter. The specification for this venturi meter is listed in Table 1.[1]

---

[1] The coefficient of discharge was calculated using Equation (1) of this report and the beta-ratio, venturi diameter, maximum flow and maximum differential pressure that were provided by the Fischer & Porter Company venturi literature.

Table 1
Summary of Venturi-Type Meter

Manufacturer	Simplex
Model No.	Type "TG"
Approach diameter (inches)	16
Throat diameter (inches)	11.98
β-ratio	0.7489
Coefficient of discharge	0.9100
Maximum flow rate (MGD)	11.5
Maximum differential pressure (inches of Water)	80

The 30-inch Krohne magnetic flow meter was installed in 1993. Based on magnetic induction principles, the magnetic flow meter provides an obstructionless flow meter that essentially averages velocity over the pipe area. Unlike differential producers, which use Bernoulli's streamline energy equation, the operating principle of a magnetic flow meter makes it a true volumetric flow device (Miller, 1996). Its specifications are listed in Table 2.

Table 2
Summary of Magnetic Meter

Manufacturer	Krohne
Model No.	IFS4000-F
Approach diameter (inches)	30
Maximum flow, operating range (MGD)	38, 3-32

C. Flow Totalization

The station currently has a Westinghouse control system. Flow totalization occurs differently for the two finished meters. A Rosemount Model 1151 DP differential pressure transmitter is installed on the 16-inch venturi meter. The output from the pressure transmitter is sent to the Westinghouse QAX card which converts the analog signal to digital data. The Krohne magnetic flow meter generates a pulsed output, which the Westinghouse QAX card is not set up to receive. Therefore, the Krohne SC100 AS signal converter microprocessor converts the signal to a proportional current for transmission to the Westinghouse system by a 4-20 mA dc current loop. The Westinghouse QAX card converts the analog signal to digital data. This digital data is used by the Westinghouse system to display flow values and calculate running flow totals throughout the course of the month.

The Krohne meter also has internal electronic totalizers. The data from these totalizers is not conveyed to the Westinghouse system.

D. Calibration

An effective calibration procedure should calibrate both the primary flow meter and its secondary measurement device. First, the secondary measurement device, such as a pressure transmitter, should be calibrated to make sure it is reading correctly. Then, the flow meter itself should be calibrated to make sure it is functioning properly. For the primary flow measurement devices, the Village of Northbrook (Village) assumes manufacturer's rating tables are correct. The Village does not perform any wet calibrations on the primary flow meters or their secondary measurement devices. Thus, all of the Village's calibrations can be considered inferential in nature. Calibration is performed on both the effluent venturi and magnetic meters annually by an independent contractor, Technical Support Associates (TSA).

A dry calibration is performed on the venturi meter's differential pressure transmitter. This procedure consists of flushing the lines, applying pressure to the high side of the transmitter with either a Meriam 350 Digital Manometer Model DN2000 or a Wallace & Tiernan WT65-120 pneumatic pressure calibrator and reading the corresponding mA dc output (with the Fluke DVM) for 5 points over the range.

The Wallace & Tiernan unit has a built-in regulator to induce pressure during calibration, while the Meriam Digital manometer requires a separate regulator to induce pressure on the line during the test. Although the Meriam manometer and Wallace & Tiernan pressure calibrator are not sent out for calibration and certification on a regular basis, the values on these instruments are compared to each other to ensure a reasonable amount of accuracy.

For the Krohne magnetic flow meters, calibration is performed annually with a Krohne simulator. The Krohne calibration equipment is used to input a simulated signal. The Fluke Model 87 DVM, a digital multimeter, is used to read the corresponding mA dc output at the particular range. This simulator checks the transmitter. The Fluke DVM is calibrated annually to TSA's DP100 analogic shop standard.

Since the calibrations are conducted by an independent contractor, Technical Support Associates (TSA), who specialize in this type of work, it is assumed that the calibrators are calibrated and re-certified on a regular basis.

2. Uncertainty in Metering and Measurement Components

A. Venturi-Type Meters

The Simplex venturi meter was installed in the early 1960s. A manufacturer representative said that typically these tubes have an accuracy of ± 0.5 percent of the full rate of flow, or 1 percent of the rate of flow. However, the manufacturer cautioned that these accuracies do not account for potential upstream conditions that could reduce these accuracies. It was not physically practical to investigate the condition of the upstream piping, pressure taps or throat liner. Thus, we do not know what condition the critical portions of the Simplex venturi tubes are in and are unable to make a solid estimate of the accuracy of the meters.

Like the meters inspected at the City of Chicago's Southwest Station, the throat of the 16-inch finished water meter at the Northbrook Plant is lined with bronze. Bronze is known for its ability to resist corrosion and formation of tubercles. Therefore, it is reasonable to assume that any significant corrosion or tuberculation would occur on the inlet piping only. Since the water pumped through the Northbrook Plant and the Southwest station have the similar water chemistry and are treated in a similar manner, it is assumed that if the venturi at the Northbrook Plant was inspected, the results would be similar to the results of the meter inspection at the Southwest Station. Therefore, based on the determinations made in the *Technical Review of Lake Michigan-Southwest Pumping Station*, any error due to corrosion and tuberculation is considered insignificant at the Northbrook Plant.

Since error due to corrosion and tuberculation is considered insignificant, the accuracy is assumed to be of ± 0.5 percent of the full rate of flow, or 1 percent of the rate of flow for the 16-inch finished water meter. The more conservative of the two accuracy values, which is dependent on the flow rate passed through the venturi, will be used in the uncertainty calculations. This uncertainty will be systematic in nature with an unknown bias direction. It should be noted that the venturi's manufacturer stated that flows at the low end of this application (0.5 MGD) would not be as accurate as the accuracy values stated above due to the low differential pressure produced by the meter. No quantitative accuracy value for low end measurements was available so the accuracy values stated above will be used for the low end measurements despite these accuracy values being higher than the actual accuracies of the low end measurements.

B. Magnetic Flow Meter

The manufacturer's specifications indicate that for the 30-inch Krohne magnetic flow meter, the accuracy of the pulsed output could be either ± 0.4 percent or ± 0.2 percent of the flow reading, depending on the option selected. This analysis assumes an accuracy of ± 0.2 percent, as a Krohne representative said meters with the SC100 AS installed typically have the 0.2 percent accuracy option. This accuracy is a

percentage of the rate for velocities above 3 fps (9.5 MGD). If velocities are less than 3 fps, the accuracy is then ± 0.1 percent of the flow reading +0.04 inch/s (offset correction for low flow). An additional uncertainty of ± 0.062 percent of the flow reading is attributed to the electronics of converting a pulsed frequency output to a 4-20 mA output. This meter was installed in 1993. It is assumed that since it's a relatively new installation, the manufacturer's accuracy is a reasonable value to assume. Errors are systematic for the pulsed output error and random for the conversion error. The pulsed output errors bias is of unknown direction.

C. Pressure Taps

The pressure taps that are used to measure the pressure differential should be square with no roughness, burrs, or wire edges (Miller, 1996). If the pressure taps that are used do not meet these requirements, then a bias error would be introduced. It was not practical to inspect the pressure taps of these meters. The flow measurement devices were all constructed under a controlled manufacturing environment with very little opportunity for a pressure tap to be constructed poorly. Thus, we assumed that the manufacturer constructed the pressure taps correctly and that no additional error would be introduced due to the pressure taps.

D. Meter Installation

An appropriate minimum length of straight, circular pipe is required upstream of the flow meter to guarantee that the flow is fully established, the velocity profile entering the meter is not distorted and that the meter will preform properly. The length of this approach section depends on number and types of bends and fittings located upstream of the meter.

At the Northbrook plant, the first upstream obstruction is a single bend located 10 feet upstream of the venturi. An unknown length of pipe extends to the next upstream obstruction which is a valve. Table 3 indicates the minimum pipe lengths, as reported in ISO 5167-1:1991, required for both of these lengths of pipe given their upstream bends or fittings.

The approach length from the venturi to the first upstream fitting (a single bend) was adequate to guarantee that flow was fully established and the flow profile was not distorted. The exact approach length to the second upstream fitting (a valve) was unknown but based on field investigations is believed to exceed the minimum required pipe length of 3.7 feet.

Table 3
Upstream Disturbances and Approximate Approach Lengths for the 16-inch Finished Water Venturi Meter at the Northbrook Plant

Pipe Reach	Upstream Fitting	Approach Length (ft)	Required Pipe Length for Zero Error, ft
First Upstream Length	single bend	10.0	6.0
Second Upstream Length	valve	Unknown*	3.7

**The exact length is unknown but believed to exceed 3.7 feet based on field investigations.*

For the 30-inch Krohne magnetic flow meter, manufacturer specifications state that since the magnetic field passes through the entire flow area, the signal represents a mean value over the pipe cross-section; therefore, only relatively short straight inlet pipes (5 x diameter) from the electrode axis are required upstream of the primary head. Based on the manufacturer's recommendations, 12.5 feet is required. The first upstream obstruction is an elbow located 150 feet upstream of the meter. This 150 feet upstream length exceeds the minimum required upstream length of 12.5 feet, and therefore no additional uncertainty was considered for the magnetic flow meter installation.

E. Sampling

Additional uncertainty can also be introduced due to how the flow measurement data is recorded. If, for example, a quantity varies sinusoidally, but that quantity is only measured at the times when the quantity is at a peak, then the average measurements will be higher than the true average. This would introduce a bias into the system. On the other hand, if a quantity is measured or sampled frequently, then there will be very little error introduced due to sampling. The flow rates at the Northbrook station are sampled every two to three seconds, and these readings are used to determine the average daily volume pumped through the station. This implies that the daily volume measurements are actually composed of about 28,800 to 43,200 individual flow measurements. Because the Village records the flow rate so often, there should be no error introduced due to sampling.

F. Pressure Differential Measurement

A Rosemount Model 1151DP differential pressure transmitter is used to measure flow through Simplex venturi meter on the 16-inch effluent line. It was assumed that the accuracy specifications provided by the manufacturer were correct. The specifications identify accuracy (includes combined effects of hysteresis, repeatability, and independent linearity), stability, temperature effect, static pressure effect, vibration effect, power supply effect, load effect, and mounting position effect as the components contributing to the overall accuracy of the pressure differential measurement. Compared to the accuracy, stability and temperature affect, the other components are assumed to be insignificant . Therefore, only the accuracy, stability, and temperature affect will be considered in the analysis.

The Rosemount pressure transmitter has a variable input range which allows the range to be best matched to the measured pressure differential. Station records show the calibration range as 0 to 60.28 inches of water for the 16-inch finished venturi meter. The upper range limit of the transmitter is 150-inches of water.

The transmitter's accuracy, which included the combined effects of hysteresis, repeatablity and independent linearity, is ± 0.2 percent of the calibrated span and the stability is reported to be ± 0.2 percent of the upper range limit for six months. To set a maximum error limit, the entire uncertainty due to stability was used. The error introduced due to temperature effects is reported at ±1.0 percent of the span per 100 degrees F. This temperature refers to the ambient temperature, and variations in temperature of the fluid being measured could impact this value. The Village does not monitor effluent temperature. It is assumed to be similar to the lake temperature variation, about a 40-degree range between 32 to 70 degrees F.

The three uncertainty components are systematic in nature with an unknown bias direction.

G. Dry Calibration of Pressure Transmitters

The secondary measurement devices are dry-calibrated annually. The Rosemount pressure transmitter is calibrated with either the Meriam 350 Digital Manometer Model DN 2000 or Wallace & Tiernan's T65-120 pressure calibrator.

As either the Meriam or Wallace & Tiernan equipment can be used in the pressure transmitter's calibration, accuracy for both were reviewed. Because the pressure transmitter is adjusted to the calibration equipment's reading, all of the calibrator's uncertainty components will become a error reported by the Rosemount pressure transmitter. The accuracy of the Meriam equipment is ± 0.025 percent of the reading ± 5 digits. The Meriam's accuracy includes the combined effects of temperature, linearity, repeatability, hysteresis, and resolution. The Wallace and Tiernan WT65-120 Pneumatic Pressure Calibrator's manufacturer's specifications cite uncertainty values various components. The ones considered significant include the accuracy and the temperature affect with values of 0.1 percent of the full scale and 0.1 percent of the full scale per 10°C (50°F) change from 25°C (77°F), respectively. As both calibrators are used interchangeable, the more conservative accuracy for the Wallace & Tiernan calibrator was assumed in the analysis. Full scale of the Wallace & Tiernan calibrator is 850 inches of water. The Village does not monitor effluent temperature. It is assumed to be similar to the lake temperature variation, about a 40 degree range between 32 to 70 degrees F. For this analysis, we will assumed that the water temperature was half way between 32 to 70 degrees F, or 51 degrees F (10.6°C). These uncertainty components are systematic in nature with an unknown bias direction.

The Fluke DVM multimeter reads mA dc output for five points over the range. The Fluke DVM is used for the venturi meter calibration. For the original Fluke 87, manufacturer's specifications state an accuracy of ± 0.2 percent of the reading + 2 significant figures. It is assumed that the multimeter reads to the hundredths place. Since the Fluke DVM is used to read the corresponding mA dc output, during calibration, its uncertainty is also a component of the meter's total systematic uncertainty. The uncertainty of the Fluke DVM is a bias of unknown direction.

Note, however, that the three parameters of the calibrator (accuracy and temperature affect of the pressure module and accuracy of the current multimeter) may not be totally uncorrelated since the pressure transmitter converts a physical measurement, the pressure, into an electrical signal while the multimeter loop current appears to be correlated to the pressure from the pressure module. Although, these parameters may not be totally uncorrelated, it was not accounted for in this analysis.

H. Dry Calibration of Krohne Electronics

The Village uses a Krohne GS 8 altometer for calibrating the magnetic flow meter. The Krohne altometer model inputs a simulated signal. According to Krohne manufacturer representatives, the GS8 calibrator is usually purchased as a testing device to check electronics. If used as a calibration tool, it should be recertified periodically. Krohne provides this certification at their factory. The accuracy of these altometers is ± 1.5 percent of the reading. This error is systematic in nature. The direction of this bias is unknown.

The Fluke DVM multimeter is also used for the magnetic meter calibration. For the original Fluke 87, manufacturer's specifications state an accuracy of ± 0.2 percent of the reading + 2 significant figures. It is assumed that the multimeter reads to the hundredths place. Since the Fluke DVM is used to read the corresponding mA dc output, during calibration, its uncertainty is also a component of the meter's total systematic uncertainty. The direction of this bias is unknown.

I. SCADA System

During the study period, the Village used a Westinghouse control system for flow totalization. The Westinghouse QAX card converts the analog signal to digital data for both the venturi meter and magnetic meter. The Westinghouse specification states that the QAX card's analog to digital conversion is done with an accuracy of ± 0.1 percent of the upper range value. In this case, the upper range value is assumed to be the upper range flow value of the venturi meter and the magnetic flow meter or 11.5 MGD and 32 MGD, respectively. This error is random in nature.

The Village plans on replacing the Westinghouse system with a Moore APACS system by 2003.

3. Sample Uncertainty Calculation for Effluent Meters

To demonstrate how the uncertainty of the measured volume pumped through the Northbrook Plant was estimated, a series of sample calculations follows. The method used to estimate the uncertainty is similar to that described in the *Technical Review of Lake Michigan Water Withdrawal by the Village of Evanston.* Please refer to this document for background on the statistical handling of measurement uncertainty. The Village provided the hourly logs of three, two-week periods. These time periods were the first 14 days in September 1998, and February and May 1999. It was assumed that the Northbrook Station's pumpages over these time periods were representative of the typical pumpages. It was also assumed that Northbrook Station's pumpages were constant over each hour reported on the daily log sheets. The uncertainty of the hourly and daily readings can be obtained using these assumptions. The uncertainties can be reported as the standard deviation of the measurements (expressed by the variable *s*) or in relative terms (expressed by the variable *CV*, which is the standard deviation of the measurements divided by the mean of the measurements).

A. Uncertainty of Hourly Flow Measurements

(1) Systematic (Bias) Error

The majority of the error components are systematic in nature. For the 16-inch Simplex venturi meter, the systematic errors include error from the venturi, the pressure transmitters, and the calibration equipment. The systematic uncertainty components for the Krohne Magnetic meter include the meter's accuracy of pulsed output, and the calibration equipment.

Venturi Meter Flow Measurements

To determine the uncertainty of the hourly flow measurements for the venturi meter, all uncertainties need to be in terms of percent accuracy of actual rate. The uncertainties from the venturi meter, and the Fluke DMV multimeter are already expressed in these terms while the uncertainties from the pressure transmitters and the Wallace & Tiernan calibrator are expressed in terms of percent accuracy per calibrated span, upper range limit (URL), or full scale (FS).

The standard equation for the flow through a venturi-type meter is:

$$Q = \frac{C_d A_t}{\sqrt{1-\beta^4}} \sqrt{2g\Delta h} \qquad \textit{Equation (1)}$$

Where:

Q	=	Flow rate.
C_d	=	Discharge coefficient.
A_t	=	Area of the throat section.
β	=	ratio of the throat diameter to the approach section diameter. (also referred to as the beta-ratio).
g	=	Acceleration due to gravity.
Δh	=	Pressure differential across the meter.

Based on manufacturer information, the C_d value for the venturi meter is 0.91.

Note that the model assumes that the discharge coefficient, throat area, and throat to approach diameter ratio (i.e. β-ratio) introduce no errors to the discharge calculations. That is, the differential pressure head of the venturi meter is the only source of error or uncertainty.

For illustration of the uncertainty calculations, we will be examining the pumping characteristics for September 1, 1998.

The throat area, A_t, for the Simplex venturi meter is:

$$A_t = \frac{\Pi(11.98)^2}{4} = 112.7in^2 = 0.78ft^2 \qquad \textit{Equation (2)}$$

For the first hour on September 1, 1998, 2.02 MGD was flowing through the venturi. The pressure differential for this flowrate can be determined using *Equation (1)*.

$$\Delta h = \left[\frac{Q\sqrt{1-\beta^4}}{C_d A_t \sqrt{2g}}\right]^2 = 12\left[\frac{1.547(2.02MGD)\sqrt{1-(0.7489)^4}}{(0.91)(0.78ft^2)\sqrt{2(32.16ft/s^2)}}\right]^2 = 2.48in. \qquad \textit{Equation (3)}$$

The values of 12 and 1.547 that appear in *Equation (3)* are unit conversion factors to convert feet to inches and MGD to cubic feet per second (cfs), respectively.

The pressure differentials of the venturi-type meter is measured using Rosemount 1151 pressure transmitter. Based on the manufacturer's performance specifications, this pressure transmitter has an accuracy of ± 0.20 percent of the calibrated span, a stability of ± 0.20 percent of URL, and temperature effect of ±1.0 percent per 100 degrees C. The calibrated span of the venturi is 60.28 inches of water and the URL of the transmitter is 150 inches of water. Thus, the uncertainty in the pressure differential measurement due to accuracy would be ± 0.12 inches of water (i.e., ± 0.002 times 60.28). The uncertainty in the flow rate due to the accuracy of the pressure transmitter for venturi meter would then be:

$$CV_{Qa} = \frac{Xs_p}{\Delta h} = \frac{(0.5)(\pm 0.12in)}{2.48in} = \pm 2.42\% \qquad \textit{Equation (4)}$$

Where:

CV_{Qa} = Uncertainty in the flow rate due to the accuracy of the pressure transmitter.

s_p = Uncertainty in the pressure transmitter (due to transmitter accuracy in this case).

X = Sensitivity coefficient equal to 0.5 for the pressure transmitter as the flow is directly proportional to the square root of pressure differential in *Equation (1)*.

Δh = Pressure differential.

See *Technical Review of Lake Michigan Water Withdrawals by the City of Evanston* for additional information on the sensitivity coefficient, *X*. The uncertainty in the flow rate due to the transmitter's accuracy, stability, and temperature affect for the Simplex meter are shown in Table 4.

Either the Meriam or Wallace & Tiernan calibration equipment can be used to calibrate the pressure transmitter. Since the Wallace & Tiernan equipment has a more conservative accuracy, its accuracy will be used in the uncertainty calculations. This equipment has and accuracy of 0.1 percent of full scale and a hysteresis of 0.1 percent of full scale. The full scale of the Wallace & Tiernan calibrator is 850 inches of water. Thus, the uncertainty from the accuracy of the calibrator would be ± 0.85 inches of water (i.e., ± 0.001 times 850) for the venturi meter. The uncertainty in the flow rate due to accuracy component of the calibrator for the venturi meter would then be:

$$CV_{Qa} = \frac{Xs_p}{\Delta h} = \frac{(0.5)(\pm 0.85in)}{2.48in} = \pm 17.1\% \qquad \textit{Equation (5)}$$

Note that this uncertainty is extremely high due to the span of the calibrator (0 to 850 inches or water) being approximately one magnitude greater than the span of the metering (0 to 80 inches of water).

The process used above can also be applied to the uncertainty of the hysteresis component of the calibrator. The uncertainty in the flow rate due to the accuracy and stability of Wallace & Tiernan calibrator are shown in Table 4.

Table 4
Summary of Uncertainty Calculations to determine Percent of Flow for the Rosemount Pressure Transmitter and Wallace & Tiernan Calibrator

Instrument	Uncertainty Source	CV for Δh	FS, URL or Calibrated Span	Uncertainty for Δh	CV for Flow (%)
Rosemount	Pressure Transmitter	0.2 % of calib. span	60.28	0.12	2.42
Rosemount	Pressure Transmitter	0.2 % of URL	150	0.30	6.12
Rosemount	Pressure Transmitter	1.0 % of calib. span/100°F	60.28	0.24	4.90
Wallace & Tiernan	Calibrator	0.1 % FS	850	0.85	17.3
Wallace & Tiernan	Calibrator	0.1 % FS per 10°C change from 25°C	850	0.90	18.4

In this study, the bias uncertainty estimates will be broken down into three categories:

- Bias uncertainty with a known bias direction.
- Bias uncertainty with an unknown bias, but known to be in the same direction for each meter.
- Bias uncertainty with an unknown bias direction.

Explanation of this breakdown was detailed in *Technical Review of Lake Michigan Water Withdrawals by the Village of Evanston*. Table 5 lists the type of bias uncertainty for each of the bias estimates for the first hourly readings for the Simplex venturi meter. Additionally, Table 5 also provides the absolute bias estimates for the first hourly readings taken from venturi meter based on the following equation:

$$s_b = CV_{flow} \cdot Q_{\substack{first \\ hour}} = (0.0323)(2.02\,MGD) = 0.065\,MGD \qquad \textit{Equation (6)}$$

Where:

S_b = Standard deviation (or absolute uncertainty) of the flow measurement due to the respective systematic uncertainty estimate.

Cv_{flow} = Relative uncertainty in the flow rate.

$Q_{first\ hour}$ = Flow for the first hour.

Table 5
Summary of Venturi Meters Systematic Uncertainty Components for the First Hour on September 1, 1998

Bias Component	Type of Bias	CV_b(%)	S_b (MGD)
Venturi	Direction unknown	± 2.85	± 0.058
Approach lengths	NA	NA	NA
Pressure transmitters			
– *Accuracy*	Direction unknown	± 2.42	± 0.049
– *Stability*	Direction unknown	± 6.12	± 0.124
– *Temperature*	Direction unknown	± 4.90	± 0.099
Calibrator			
– *Accuracy*	Direction unknown	± 17.1	± 0.345
– *Hysteresis*	Direction unknown	± 18.4	± 0.372
Multimeter	Direction unknown, but in same direction for both meters	±0.20 plus two sig. digits*	± 0.024

* *It is assumed that the readings are to the hundredths place.*

Magnetic Meter Flow Measurements

To determine the uncertainty of the hourly flow measurements for the magnetis meter, all uncertainties need to be in terms of percent accuracy of actual rate. The uncertainties from the Krohne GS 8 altometer, and the Fluke DMV multimeter are already expressed in these terms, while the uncertainty from the meter's accuracy of pulsed output is expressed in terms of percent of actual rate plus 0.04 inches per second (or percent of actual rate, depending on the flow velocity).

Magnetic flow meters are a true flow measurement device, and are based on Faraday's law of magnetic induction. According to Spitzer (1990):

Magnetic flow meters apply Faraday's Law in the following way: when a conductive liquid passes through a homogeneous field, a voltage is generated along a path between two electrodes positioned within the magnetic field on opposite sides of the pipe. The path length is the distance between the electrodes. From Faraday's Law as applied to magnetic flow meters, the induced voltage becomes:

$E = constant \times B \times D \times v$: Equation (7)

Where:

B Strength of the magnetic flux density.

D Path length between the probes, in the case of a circular pipe, the diameter.

v Velocity of the medium.

Therefore, if the magnetic field is constant and the distance between the electrodes is fixed, the induced voltage is directly proportional to the velocity of the liquid. Since the volumetric flow is related to the average fluid velocity,

$$Q = A \times v \qquad \textit{Equation (8)}$$

with

$$A = (\pi \times D^2)/4 \qquad \textit{Equation (9)}$$

In pipes the induced voltage can be expressed as:

$$E = \left(\frac{constant \times B \times 4}{\Pi \times D} \right) \times Q \qquad \textit{Equation (10)}$$

Assuming all of the terms within the parenthesis are held constant, then the resulting induced voltage output is linearly proportional to the liquid flow.

The meter's primary element's accuracy is ± 0.2 percent of the rate for velocities greater than 3 fps or ± 0.1 percent + 0.04 in/s for velocities are less than 3 fps. The 0.04 in/s is the low flow offset, and will remain a constant value for the meter when velocities are less than 3 fps, as it is the discharge that flows through the 30 inch meter at 0.04 in/s. The meter's primary element's relative accuracy varies depending on the flow. During the first hour of September 1998, the flow through the magnetic flow meter was 4.464 MGD, which equals an average velocity of 1.4 fps through the 30 inch diameter meter. The resulting uncertainty for that time period is computed below:

$$(0.001)(4.464\ MGD) + \left(0.04 \frac{in}{\sec}\right)(4.9\ ft^2)(0.0539) = 0.0151\ MGD \qquad \text{Equation (11)}$$

0.0539 is the conversion factor for in-ft^2/sec to MGD. The relative uncertainty of the primary element of the magnetic meter at a flow of 4.464 MGD is 0.34 percent (0.0151 MGD divided by 4.464 MGD).

All of the other systematic uncertainty components are already in terms of percent of actual rate. Table 6 lists the type of bias uncertainty for each of the bias estimates for the first hourly readings for the Krohne magnetic meter. Using Equation (6), the absolute bias estimates for the first hourly readings taken from magnetic meter can be calculated and are also provided in Table 6.

Table 6
Summary of Magnetic Meters Systematic Uncertainty Components for the First Hour on September 1, 1998

Bias Component	Type of Bias	CV_b(%)	S_b (MGD)
Magnetic Meter	Direction unknown	0.34	± 0.015
Approach lengths	NA	NA	NA
Calibrator	Direction unknown	± 1.50	±0.067
Multimeter	Direction unknown, but in same direction for both meters	±0.20 plus two sig. digits*	± 0.029

* *It is assumed that the readings are to the hundredths place.*

Combining the Venturi and Magnetic Meter's Systematic Uncertainties

The systematic uncertainty estimates for the venturi meter and the magnetic meter can be combined as shown below in *Equation (12)* to determine the overall hourly systematic uncertainty for September 1, 1998. To determine the uncertainty of the measurements, the individual uncertainty estimates should be combined on the basis of absolute uncertainty (i.e., standard deviations) and not relative uncertainty (i.e., coefficient of variation).

$$S_b = \sum S_{b_{\substack{direction \\ known}}} \pm \left[\left(\sum S_{b_{\substack{unknown \\ but\ in\ same \\ direction}}} \right)^2 + \sum S^2_{b_{\substack{direction \\ unknown}}} \right]^{\frac{1}{2}}$$

Equation (12)[2]

Where:

$S_{b\ direction\ known}$	=	Absolute bias uncertainty of known direction.
$S_{b\ unknown\ but\ in\ same\ direction}$	=	Absolute bias uncertainty of unknown direction, but known to occur in the same direction for each meter.
$S_{b\ direction\ unknown}$	=	Absolute bias uncertainty of unknown direction.

For the first hour, using *Equation (12)*, the overall absolute bias uncertainty, S_b, was found to be ± 0.532 MGD, which corresponds to a relative uncertainty, CV_b, of 8.21 percent (i.e., 0.532 MGD divided by the total flow rate of 6.48 MGD). This process was repeated for each of the 24-hour readings taken during the day. The results are provided in Table 8.

---

[2] Technically, if there is more than one uncertainty source that is considered to have an "unknown direction that is known to be in the same direction for several meters," the various error sources for a single meter should be combined by the root mean square and then this value should be linearly added to the same resultant of the other meters. However, for this analysis, it was assumed that all uncertainty sources were in the same unknown direction and thus all uncertainty sources having an "unknown direction that is known to be in the same direction for several meters" were added linearly (i.e., the root mean square was not applied to a single meter's various uncertainty sources having an "unknown direction that is known to be in the same direction for several meters" before linearly adding to the other meter's same type of error.) This assumption was applied throughout all the calculations of the analysis.

(2) Random Error

Only the SCADA uncertainty and the magnetic meter's conversion of pulsed frequency to current uncertainty were identified as being random in nature. The SCADA manufacturer states that the analog-to-digital conversion can take place with an uncertainty of ± 0.10 percent of full scale. The uncertainty associated with the magnetic meter's conversion of pulsed frequency to current is 0.062 percent of the reading.

As mentioned earlier, it was assumed that full scale refers to full scale of the venturi-type meter. Thus, for the venturi meter with a capacity of 11.5 MGD, the absolute random uncertainty due to the SCADA system would be ± 0.0115 MGD (± 0.001 times 11.5 MGD). Hence, the relative uncertainty estimate would be ± 0.57 percent (i.e., ± 0.0115 MGD divided by 2.02 MGD). Similarly, the absolute random uncertainty due to the SCADA system for magnetic meter would be ± 0.032 MGD (i.e., ± 0.001 times 32 MGD), and the relative random uncertainty would be ± 0.72 percent (i.e., ± 0.032 MGD divided by 4.464 MGD). Table 7 summarize the random uncertainty components for both the venturi and magnetic meters.

Table 7
Summary of the Venturi and Magnetic Meters Random Uncertainty Components for the First Hour on September 1, 1998

Meter	Uncertainty Component	CV_r(%)	S_r (MGD)
Simplex Venturi Meter	SCADA	0.57	0.0115
Krohne Magnetic Meter	SCADA	0.72	0.032
Krohne Magnetic Meter	Conversion of Pulsed Frequency to Current	0.062	0.003

The overall absolute random uncertainty for the first hour on September 1st, 1998 can be determined by combining the absolute random uncertainties due to the SCADA system and the conversion of the pulsed frequency to current using the root-mean-square method. The method results in an overall absolute random uncertainty of ± 0.034 MGD or a relative random uncertainty, CV_r, of ± 0.53 percent (i.e., ±0.034 MGD divided by 6.484 MGD).

(3) Combining Systematic and Random Errors

The systematic and random errors can be combined using the following methodology:

$$S_b = \sum S_{b_{\substack{direction \\ known}}} \pm \left[\left(\sum S_{b_{\substack{unknown \\ but\ in\ same \\ direction}}} \right)^2 + \sum S^2_{b_{\substack{direction \\ unknown}}} + \sum S_r^2 \right]^{\frac{1}{2}} \qquad \textit{Equation (13)}$$

Where:

S_r = Absolute random uncertainty.

Using *Equation (13)*, the overall uncertainty of the sum of the two flow measurements made in the first hour of September 1, 1998, is ± 0.547 MGD, or ± 8.43 percent.

This process is repeated for each of the 24-hour readings taken during the day and the results can be seen in Table 8. The average uncertainty, *CV*, of an hourly flow measurement performed on September 1 was ± 4.38 percent. This implies that the 95-percent confidence interval, *CI*, for an hourly flow measurement would be ±9.06 percent (±4.38 times 2.069). Over the entire study period, the average uncertainty of an hourly flow measurement, *CV*, was found to be 12.47 percent. The average 95 percent confidence interval of an hourly flow measurement, *CI*, would then be equal to 24.44 percent (±12.47 times 1.960).

Table 8
Systematic, Random, and Overall Uncertainty Estimates for Hourly Flow Measurements Made on September 1, 1998

Hour	Total Flow (MGD)	CV_b (%)	S_b (MGD)	CV_r (%)	S_r (MGD)	Overall *CV* (%)
1	6.48	± 8.43	± 0.55	± 0.53	± 0.03	± 8.45
2	8.35	± 6.83	± 0.57	± 0.41	± 0.03	± 6.84
3	8.33	± 7.01	± 0.58	± 0.41	± 0.03	± 7.03
4	9.48	± 4.62	± 0.44	± 0.36	± 0.03	± 4.63
5	10.66	± 2.16	± 0.23	± 0.32	± 0.03	± 2.19
6	10.66	± 2.16	± 0.23	± 0.32	± 0.03	± 2.19
7	12.36	± 2.00	± 0.25	± 0.28	± 0.03	± 2.02
8	11.93	± 2.01	± 0.24	± 0.29	± 0.03	± 2.04

Table 8
Systematic, Random, and Overall Uncertainty Estimates for Hourly Flow Measurements Made on September 1, 1998

Hour	Total Flow (MGD)	CV_b (%)	S_b (MGD)	CV_r (%)	S_r (MGD)	Overall CV (%)
9	9.82	± 2.29	± 0.23	± 0.35	± 0.03	± 2.32
10	8.35	± 3.37	± 0.28	± 0.41	± 0.03	± 3.40
11	7.75	± 3.97	± 0.31	± 0.44	± 0.03	± 3.99
12	7.20	± 4.38	± 0.32	± 0.47	± 0.03	± 4.41
13	6.74	± 5.37	± 0.36	± 0.51	± 0.03	± 5.40
14	7.03	± 5.20	± 0.37	± 0.48	± 0.03	± 5.22
15	7.30	± 5.02	± 0.37	± 0.47	± 0.03	± 5.05
16	6.86	± 5.80	± 0.40	± 0.50	± 0.03	± 5.82
17	9.10	± 3.48	± 0.32	± 0.38	± 0.03	± 3.50
18	10.51	± 3.08	± 0.32	± 0.33	± 0.03	± 3.09
19	6.29	± 7.40	± 0.47	± 0.54	± 0.03	± 7.42
20	11.35	± 3.63	± 0.41	± 0.30	± 0.03	± 3.64
21	11.11	± 3.46	± 0.38	± 0.31	± 0.03	± 3.48
22	8.64	± 4.67	± 0.40	± 0.40	± 0.03	± 4.69
23	9.36	± 3.78	± 0.35	± 0.37	± 0.03	± 3.80
24	8.40	± 4.47	± 0.38	± 0.41	± 0.03	± 4.49

B. Uncertainty of Daily Volume Measurements

An estimate of the uncertainty of the daily volume pumped through the station can be obtained from the 24 hourly flow measurements. The volume pumped through the Northbrook Plant is the average of the 24 hourly flow measurements times one day. For September 1, 1998, the average volume pumped through the station is 8.9 million gallons (MG).

The uncertainty of the systematic daily volume measurements can be determined using the following equation:

$$CV_{Vb} = CV_{bV_{\substack{direction\\known}}} \pm \frac{\Delta t}{m_V}\left(\sum_{i=1}^{n} Q_i^2 CV^2_{bi_{\substack{direction\\unknown}}} + \left(\sum_{i=1}^{n} Q_i CV_{bi_{\substack{unknown\\but\ in\ same\\direction}}}\right)^2\right)^{\frac{1}{2}} \qquad \textit{Equation (14)}$$

Where:

CV_{Vb} = Relative uncertainty of the total bias volume measurement.

$CV_{bV\ direction\ known}$ = Bias with known direction of the total bias volume measurement.

$CV_{bi\ direction\ unknown}$ = Bias error in individual flow measurement *i* where bias direction is unknown.

$CV_{bi\ unknown\ but\ in\ the\ same\ direction}$ = Bias error in individual flow measurement *i* where bias direction is unknown but in the same direction for all meters.

Δt = Time increment.

Q_i = Value of flow measurement *i*.

m_v = Sum of all *n* volume measurements.

Using *Equation (14)*, the relative systematic error, CV_{vb}, was ± 1.07 percent for September 1, 1998.

The average random uncertainty component for the daily volume can be obtained from the following expression:

$$CV_{Vr} = \pm \frac{\Delta t}{m_v}\left(\sum_{i=1}^{n} Q_i^2 CV_{ri}^2\right)^{\frac{1}{2}} \qquad \textit{Equation (15)}$$

Where:

CV_{Vr} = Relative random uncertainty of the daily volume measurement.

CV_{ri} = Relative random uncertainty of the ith hourly flow measurements.

Using *Equation (15)*, the relative random uncertainty of the daily volume, CV_{vr}, for September 1, 1998, is ± 0.08 percent.

The overall uncertainty of the daily volume can then be found by combining the systematic and random uncertainty components in the following manner:

$$CV_{Vb} = CV_{bV_{\substack{direction\\known}}} \pm \frac{\Delta t}{m_V}\left(\sum_{i=1}^{n} Q_i^2 CV_{bi_{\substack{direction\\unknown}}}^2 + \left(\sum_{i=1}^{n} Q_i CV_{bi_{\substack{unknown\\but\ in\ same\\direction}}}\right)^2 + \sum_{i=1}^{n} Q_i^2 CV_{ri}^2\right)^{\frac{1}{2}} \qquad \text{Equation (16)}$$

For the date in question, the overall uncertainty of the daily volume was found to be ± 1.08 percent, or ± 0.10 MG (± 1.08 percent times 8.9 MG). The 95 percent confidence interval on the daily volume, CI_v, would then be ± 2.23 percent (±1.08 times 2.069). Note that the 95-percent confidence interval for the daily volume (± 2.23 percent) is much narrower than the 95-percent confidence interval for the hourly flow measurement (±9.06 percent). This is because the random errors and systematic errors with unknown direction associated with an hourly flow measurement are statistically canceled when they are summed over a day's time. The average random, systematic, and overall uncertainty for each day in each 2-week study period were found using the above method. A summary of the daily volume uncertainties for the September 1998 study period appears in Table 9.

Table 9
Estimated Uncertainties for Daily Volumes in September 1998 Study Period

Date	CV_{Vb} (%)	CV_{Vr} (%)	CV_V (%)	CI_V (%)
September 1	± 1.08	± 0.08	± 1.08	± 2.23
September 2	± 0.88	± 0.07	± 0.88	± 1.82
September 3	± 1.01	± 0.08	± 1.01	± 2.09
September 4	± 0.86	± 0.08	± 0.86	± 1.77
September 5	± 0.84	± 0.08	± 0.84	± 1.73
September 6	± 0.82	± 0.07	± 0.82	± 1.70
September 7	± 1.43	± 0.10	± 1.43	± 2.95
September 8	± 1.42	± 0.09	± 1.42	± 2.94
September 9	± 1.09	± 0.09	± 1.09	± 2.26
September 10	± 0.97	± 0.08	± 0.97	± 2.01
September 11	± 0.86	± 0.07	± 0.86	± 1.79
September 12	± 0.80	± 0.07	± 0.80	± 1.65
September 13	± 0.83	± 0.07	± 0.83	± 1.71
September 14	± 1.16	± 0.09	± 1.16	± 2.40
February 1	± 3.02	± 0.14	± 3.02	± 6.25
February 2	± 2.19	± 0.13	± 2.19	± 4.53

Table 9
Estimated Uncertainties for Daily Volumes in September 1998 Study Period

Date	CV_{Vb} (%)	CV_{Vr} (%)	CV_V (%)	CI_V (%)
February 3	± 2.67	± 0.13	± 2.67	± 5.52
February 4	± 3.60	± 0.14	± 3.60	± 7.45
February 5	± 2.80	± 0.13	± 2.80	± 5.79
February 6	± 4.09	± 0.15	± 4.09	± 8.46
February 7	± 4.57	± 0.15	± 4.57	± 9.46
February 8	± 3.20	± 0.13	± 3.20	± 6.62
February 9	± 3.25	± 0.14	± 3.25	± 6.73
February 10	± 3.19	± 0.14	± 3.19	± 6.59
February 11	± 3.61	± 0.14	± 3.61	± 7.48
February 12	± 2.70	± 0.14	± 2.70	± 5.58
February 13	± 4.69	± 0.15	± 4.69	± 9.71
February 14	± 5.39	± 0.16	± 5.39	± 11.15
May 1	± 5.52	± 0.14	± 5.52	± 11.41
May 2	± 3.35	± 0.13	± 3.35	± 6.93
May 3	± 3.34	± 0.12	± 3.34	± 6.91
May 4	± 3.31	± 0.12	± 3.31	± 6.85
May 5	± 2.12	± 0.11	± 2.12	± 4.39
May 6	± 2.21	± 0.13	± 2.21	± 4.56
May 7	± 2.03	± 0.12	± 2.03	± 4.21
May 8	± 4.27	± 0.15	± 4.27	± 8.84
May 9	± 5.72	± 0.14	± 5.72	± 11.83
May 10	± 4.22	± 0.12	± 4.22	± 8.72
May 11	± 1.36	± 0.11	± 1.36	± 2.82
May 12	± 11.41	± 0.20	± 11.41	± 23.61
May 13	± 3.08	± 0.13	± 3.08	± 6.38
May 14	± 1.92	± 0.11	± 1.92	± 3.97

Note that the uncertainties for February and May are significantly higher than those for September. Flows through the venturi meter for the months of February and May are lower than those through the

meter in the month of September. Low flows produce a low differential pressure across the venturi which, in turn, negatively affects the meter's accuracy.

C. Uncertainty of Annual Volume Measurements

Using the estimated uncertainty in daily volume measurements, the uncertainty in the annual volume pumped through the station can be estimated. As mentioned earlier, the study period consisted of two-week periods in September 1998, and February and May of 1999. In total, there were 42 days in the study period. Over this time period, the average systematic uncertainty for a daily volume measurement, CV_b, was determined to be 2.78 percent (±2.64 percent from unknown biases and ±0.88 percent from unknown biases known to be in the same direction for all meters) and the average random uncertainty for a daily volume measurement, CV_r, was estimated to be ±0.12 percent. The average uncertainty in daily volume would then be ± 2.78 percent and the average 95-percent confidence interval for the daily volume would be ± 5.76 percent. The uncertainty in the annual volume pumped through the Northbrook Plant, CV_V can be estimated as follows:

$$CV_V = CV_{b_{\substack{direction \\ known}}} \pm \left(\frac{CV^2_{b_{\substack{direction \\ unknown}}}}{n} + CV^2_{b_{\substack{unknown \\ but\ in\ same \\ direction}}} + \frac{CV_r^2}{n} \right)^{\frac{1}{2}} = 0 \pm \left(\frac{2.64^2}{365} + 0.88^2 + \frac{0.12^2}{365} \right)^{\frac{1}{2}} = \pm 0.89\% \qquad \text{Equation (17)}$$

The 95-percent confidence interval of the annual volume, CI_V, would then simply be ± 1.74 percent (±0.89 times 1.960). The 95-percent confidence interval for the annual volume (± 1.74 percent) is significantly less than the 95 percent confidence interval for the daily volume (± 5.76 percent). Most of the random error and unknown bias error associated with the daily volume measurement is statistically canceled when determining the uncertainty of the annual volume.

4. Quality Assurance

If the water accounting system is moved to the lakefront, there is a concern that if one of the direct diverter's flow measurement systems goes down, that there would be no way to measure the withdrawals from the lake. Thus, it is desirable that the direct diverters have a backup measurement system and, if possible, some other independent check on the measurements to ensure that the measurements are reasonable and accurate.

Neither of the finished water meters or their transmitters have backups. A signal converter from the lake front pumping station could be removed, reprogrammed and installed in the finished water magnetic meter, if necessary. Besides the finished water meters, the Northbrook Plant has raw water, processing and wash water meters that could be used to determine flows should the finished water metering fail. The additional meters also can be used to independently check the finished water meter's readings to ensure that the readings are reasonable.

The SCADA system has an uninterrupted power source that is equipped with a power generator. Therefore, loss of data is not expected due to a power outage. Should the SCADA system fail, data would not be lost since the facility is manned 24 hour per day. If the operators notice a problem with the SCADA's data collection, they can collect the data manually, until the problems with the SCADA can be resolved. In addition, the magnetic flow meter has an internal flow totalizer. The flow records from this totalizer is recorded monthly on a separate data log sheet. Therefore, the magnetic meter has an additional level of backup for data collection.

5. Summary of Inadequacies in the Current Metering Systems

For the most part, the current metering system provided a reasonable level of accuracy and has acceptable quality assurance. There are a few areas of the metering system that appear to be deficient.

- The actual venturi meters are not calibrated. Rather, the City assumes that the manufacturer's rating curves are correct. Calibration of the venturi meters would confirm or deny this assumption.

- No backup data recorders exists for the finished water venturi meter. Should the SCADA system fail, the venturi meter's flow data at the facility could lost.

- When low flows are passed through the venturi meter, high uncertainties are produced. This particularly affects the accuracy of the hourly flow values.

- The overall accuracy in estimating the water supply pumpage is dependent upon many measurement and analysis functions. The documented technical review and much previous work were focused on the accuracy of the pumpage measurements in hardware (i.e., meters, calibrator, pressure transmitter, etc.) and software (SCADA, etc.). This analyses does not take into account procedural errors such as inconsistent data in water supply pumpage as a result of the reporting mechanism.

6. Recommendations for Long-Term QA/QC and Improvements to Metering

Recommendations for long-term QA/QC and improvements to metering are as follows:

- Calibration of the venturi meters to determine if the manufacturer's rating curves are valid.
- Occasional inspection and measurement, if physically possible, of the inlet and throat of the venturi meters to determine any possible presence and effects of corrosion and tuberculation on the meter's accuracy.
- Installation of a backup recording device for the finished water venturi meter.
- Routine auditing of various water withdrawal reports, as part of the long-term QA/QC, as a means of accounting for procedural errors.

7. Conclusions

Some of the important conclusions are summarized below:

- For operational purposes, the City can determine the hourly flow measurement reading to within ± 24.44 percent at the Northbrook Plant. This value takes into account the random and systematic uncertainty associated with the venturi meters, pressure transmitters, calibration equipment, and recording system.

- On an annual basis, the total volume pumped through the station can be determined to within ± 1.74 percent. The 95-confidence interval for the annual volume is narrower than the 95-percent confidence interval for the hourly flow measurements made at the Northbrook Plant because the random and unknown bias errors associated with the measurement are statistically canceled when the measurements are summed over a year's time.

- Selection of a flow meter should take into account the range of flow being measured during the annual operation. Oversized flow meters, as in the case at the Northbrook Plant, can make a negative impact on the measurement accuracy since some uncertainty components are tied to the range of the meter. Fortunately, in the case of the Northbrook Plant, the absolute uncertainty may not be disproportionally large since the measured flow is a relatively small number when compared other Lake Michigan direct diverters.

- With the exception of a backup recorder for the finished water venturi meter, all the metering system has redundancy or backup for quality assurance.

- There is no independent check of the flow measurement system that can be used as an indicator when there is a problem within the system.

References

American Society of Mechanical Engineers, *Fluid Meters: Their Theory and Application.* ASME, New York, 6th ed., 1971.

Davis Instruments, *Portable Pneumatic Pressure Calibrator* (for the Wallace & Tiernan WT65-120

Fisher & Porter Co., *Literature (for Venturi)*, November 1963.

Fisher-Rosemount, *Model 1151DP Alphaline Differential and High Differential Pressure Transmitters*, November 1990.

International Organization for Standardization, *Measurements of Fluid Flows by Means of Pressure Differential Devices*, ISO, Switzerland, 1991.

Mead & Hunt, Inc., *Technical Review of Lake Michigan Withdrawals - Southwest Pumping Station*, February 2002.

Mead & Hunt, Inc., *Technical Review of Lake Michigan Withdrawals – Southwest Pumping Station*, July 2002.

Mead & Hunt, Inc., *Technical Review of Lake Michigan Water Withdrawals by the City of Evanston–Draft*, July 2002.

Meriam Instruments, *Manometers: Portable Digital–350 Smart Manometer*, http://www/meriam.com/cgi-bin/view?item=digiman, August 17, 1999.

Miller, Richard W., *Flow Measurement Engineering Handbook*, McGraw-Hill, New York, 1996. Pneumatic Pressure Calibrator). No date provided.

Spitzer, David W., *Industrial Flow Measurement.* Instrument Society of America, North Carolina, 1990.

Telephone conversation between Helmut Callasius of Leopold and Laura Morland of Mead & Hunt, Inc. regarding the accuracy of the Simplex meter, September 10, 1999.

Telephone conversation between John of Krohne and Laura Morland of Mead & Hunt, Inc. regarding the Accuracy of the Krohne Magnetic Meter and Krohne GS8 altometer, October 13, 1999.

Westinghouse, *12 Point Analog Input Card–QAX*, November, 1996.

Final Report

Technical Review of Lake Michigan Withdrawals Waukegan Water Plant City of Waukegan, Illinois

Prepared for:

U.S. Army Corps of Engineers – Chicago District
Chicago, Illinois

Prepared by:

MEAD & HUNT

June 2003

Table of Contents

Page

Executive Summary . . . . . E-i

1. General Description 1
   A. Summary of Operation 1
   B. Flow Measurement 1
   C. Flow Totalization 1
   D. Calibration 2

2. Uncertainty in Metering and Measurement Components 3
   A. Venturi-Type Meters 3
   B. Pressure Taps 3
   C. Meter Installation 4
   D. Sampling 4
   E. Pressure Differential Measurement 4
   F. Dry Calibration of Pressure Transmitters 5
   G. Flow Totalizer 5
   H. Dry Calibration of the Flow Totalizer 5

3. Sample Uncertainty Calculation for Effluent Meters 7
   A. Uncertainty of Hourly Flow Measurements 7
      (1) Systematic (Bias) Error 7
      (2) Random Error 13
      (3) Combining Systematic and Random Errors 14
   B. Uncertainty of Daily Volume Measurements 17
   C. Uncertainty of Annual Volume Measurements 20

4. Quality Assurance 22

5. Summary of Inadequacies in the Current Metering Systems 23

6. Recommendations for Long-Term QA/QC and Improvements to Metering 24

7. Conclusions 25

List of Tables

Table		Page
1	Uncertainty of the Systematic Components from the Pressure Transmitter, Flow Totalizer/ Chart Recorder and Calibration Equipment for the First Hourly Reading on September 11, 1998, for Each Individual Finished Water Meter	10
2	Absolute Bias Estimates for the First Hourly Readings Taken on September 1, 1998, for Each Individual Finished Water Meter	12
3	Systematic, Random, and Overall uncertainty Estimates for the Hourly Flow Measurements (Assuming that Average Daily Flow Value is Equal to Each of the Hourly Flow Values) Made Over the Study Period	15
4	Estimated Uncertainties for Daily Volumes for the Entire Study Period	19

List of Appendices

Appendix

A Schematic of the Waukegan Plant

B Flow Versus Differential Pressure Curve for Finished Water Meter No. 3

Executive Summary

Currently, diversion of water from Lake Michigan for the state of Illinois is measured at the Chicago Sanitary and Ship Canal at Romeoville. The Great Lakes Mediation Memorandum of Understanding established a lakefront diversion accounting system and specified a 3-year transition period to assess the technical acceptability of moving the diversion measurement system to the lakefront. A lakefront diversion accounting system requires metering of all domestic water withdrawals from Lake Michigan and the direct diversions into the Chicago Sanitary and Ship Canal system at the Chicago River, the Calumet River, and the North Shore Channel at Wilmette. During the 3-year transition period, the U.S. Army Corps of Engineers (USACE) has been tasked to initiate a technical review of the accuracy of the reported domestic withdrawals from Lake Michigan.

The USACE retained Mead & Hunt, Inc., to evaluate the accuracy of domestic withdrawals from Lake Michigan. A total of 12 pumping stations in the city of Chicago (City) and six suburban pumping stations will be evaluated. These evaluations include revisions to the investigations conducted on the City's Mayfair and Thomas Jefferson Stations and the city of Evanston's Station by the Illinois District of the U.S. Geological Survey. This report presents a summary of the flow measurement techniques at the Waukegan Water Plant (Waukegan Plant, as well as an estimate of the uncertainty of a daily volume measurement and an annual volume measurement. Presently, the Waukegan Plant consists of two raw water meters, internal plant metering, and three finished water meters. For this analysis, we will analyze the finished water metering system.

To obtain an estimate of the uncertainty of an individual flow measurement, we examined the manufacturer's accuracy specifications for the finished water primary flow measurement devices (i.e., the venturi-type meter) and secondary measurement devices (i.e., the pressure transmitters). The Waukegan Plant's calibration technique, sampling technique, and device installation were also examined. All of the sources of uncertainty identified from this analysis were then classified as either random or systematic in nature. Using this information and the data logs provided by the Waukegan Plant, we obtained an estimate of the uncertainty of an individual flow measurement for the finished water meter. From this information, an estimate of the uncertainty of the daily and annual volume withdrawn from the lake can be obtained using standard statistical techniques.

Some of the important conclusions are summarized below:

- The lack of data, in particular, that regarding the flow meters and their installation, significantly limits the quality of this analysis. However, as a means of providing some numerical value for the Waukegan Plant's metering uncertainty, the results of the elements that could be quantified are provided below:

- For operational purposes, the City can determine the hourly flow measurement reading to within ± 8.37percent at the Waukegan Plant. This value takes into account the random and systematic uncertainty associated with the venturi meters, pressure transmitters, calibration equipment, and recording system. Note, however, that this value is based on the assumption that the average daily flow is equal to each of the 24 hourly flows.

- On an annual basis, the total volume pumped through the plant can be determined to within ± 2.55 percent. The 95-percent confidence interval for the annual volume is narrower than the 95-percent confidence interval for the hourly flow measurements made at the Waukegan Plant because the random and unknown bias errors associated with the measurement are statistically canceled when the measurements are summed over a year's time.

- With the exception of the data recorders and transmitters, the metering system has redundancy or backup for quality assurance. Since the raw water, internal plant use water and finished water lines are all metered, there are several means to obtain readings should one of the data recorders or transmitters fail.

- The raw water, with adjustments made for internal plant usage, can be compared to the finished water metering as an independent check of the flow measurement system. The difference between the raw water minus internal plate metering and the finished water metering should be less than 2 percent. A difference greater than 2 percent indicates there may be a problem within the flow measurement system.

Technical Review of
Lake Michigan Withdrawals
Waukegan Water Plant
City of Waukegan, Illinois

1. General Description

A. Summary of Operation

The City of Waukegan measures raw water intake from Lake Michigan with two venturi flow tubes and finished water with three venturi flow tubes. The plant also has internal metering to measure the wash water flow. The accuracy analysis for this plant was performed on the finished metering.

At the time of the study, Fischer-Porter transmitters were installed on the three finished water meters although the City was planning on replacing them with Rosemount transmitters. Since the flow data obtained for this study was measured using the Fischer-Porter transmitters, their uncertainty will be considered in this analysis. The output signals from the transmitters are sent to both a Fischer-Porter bar graph indicator and a Fischer-Porter chart recorder/totalizer. A schematic of the Waukegan plant is provided in Appendix A.

B. Flow Measurement

Three venturi flow tubes are used to measure the finished water flows. All three meters are installed on 24-inch pipelines. Meter Nos. 1 and 2 are 24 inch venturi flow tubes were installed in the early 1920's. The City of Waukegan does not have any information on the manufacturer or specifications of these two meters nor has the City developed any flow versus differential pressure curves for these two meters. Meter No. 3 is a 24 inch Penn Meter flow tube that was installed in the 1960's. Some of the information required to use the standard equation for flow through a venturi-type meter was not available for Meter No. 3, however, a flow versus differential pressure curve has been developed and was used in the analysis. This curve is provided in Appendix B. It was assumed that this curve is correct.

C. Flow Totalization

The output signals from the transmitters are sent to both a Fischer-Porter bar graph indicator and a Fischer-Porter chart recorder/totalizer. The flow are read and recorded from the Fischer-Porter totalizers

on a daily basis. The readings from the three finished water meters are summed together when they are totaled. Therefore, the City only has the combined daily flows and not the individual daily flows for each of the three finished water meters. Per the City, the water passing through each of the three finished water meters is determined by the demand placed on their respectively water mains. Since this varies, the City was unable to provide a rough breakdown of what fraction of flow passes through each of the three finished water meters.

D. Calibration

An effective calibration procedure should calibrate both the primary flow meter and its secondary measurement device. First, the secondary measurement device, such as a pressure transducer, should be calibrated to make sure it is reading correctly. Then, the flow meter itself should be calibrated to make sure it is functioning properly. The City does not perform any wet calibrations on the primary flow meters or their secondary measurement devices. Thus, all of the City's calibrations can be considered inferential in nature. Calibration is performed on the pressure transmitters and chart recorders/totalizers at least annually.

To calibrate the differential pressure transmitters, pressure is measured using a Meriam manometer. The corresponding mA dc output is then measured with a Fluke Digital RMS multimeter for five points over the range.

A Transmation PPS Null Potentiometer is used as the current source for calibrating the chart recorder/totalizers for five points over the range. The corresponding output mA dc signal is read using the Fluke Digital multimeter.

2. Uncertainty in Metering and Measurement Components

A. Venturi-Type Meters

The three finished water meters are 24-inch venturi flow tubes. Essentially no information exists on Meter Nos. 1 and 2. Meter No. 3 was manufactured by Penn. Information on this meter did not include accuracy values. We were unable to obtain additional information from the manufacturer. Spitzer reports that classical venturi accuracy ranges from ± 0.7 to ± 1.5 percent depending on venturi construction. It is assumed that this percent is percent of flow, since this is typically how venturi accuracy is expressed. Since specific construction information for the 24-inch finished water meter is unknown, ± 1.5 percent will be used since it is most conservative. This uncertainty is systematic in nature with a unknown bias direction.

Additionally, since the venturis has been in service for 40 to 80 years, a possibility of wear, pitting and corrosion in critical areas exists. None of the 24-inch finished water meters have been inspected, therefore the extent of wear, corrosion and tuberculation is unknown. However, the City of Chicago inspected one of their venturi meters at their Southwest Pumping Station and found that the only significant corrosion or tuberculation occurred on the inlet piping since the throat of the venturi is lined with bronze. Bronze is known for its ability to resist corrosion and formation of tubercles. Using the Southwest Station's findings and Stanley Peerman Hutton's methodology, the uncertainty due to wear, corrosion and tuberculation was determined to be negligible at the Southwest Station. Additional information on the findings at the Southwest Station are available in the *Technical Review of Lake Michigan–Southwest Pumping Station*. The throat of Meter No. 3 is lined with bronze. It is assumed that the other two meter's throats are lined with bronze also. Given this, it is assumed that if the three 24-inch venturi meter were inspected, the findings would be similar to those from the Southwest meter's inspection. Therefore, it is assumed that there is no additional uncertainty due to wear, corrosion or tuberculation.

B. Pressure Taps

The pressure taps that are used to measure the pressure differential should be square with no roughness, burrs, or wire edges (Miller, 1996). If the pressure taps that are used do not meet these requirements, then a bias error would be introduced. It was not practical to inspect the pressure taps of these meters. The flow measurement devices were all constructed under a controlled manufacturing environment with very little opportunity for a pressure tap to be constructed poorly. Thus, we assumed that the manufacturer constructed the pressure taps correctly and that no additional error would be introduced due to the pressure taps.

C. Meter Installation

An appropriate minimum length of straight, circular pipe is required upstream of the flow meter to guarantee that the flow is fully established, the velocity profile entering the meter is not distorted, and that the meter will perform properly. The length of this approach section depends on number and types of bends and fittings located upstream of the meter. Further, inadequate straight piping downstream of the meter can also affect the meter's accuracy.

The City does not have any drawings of the finished meter installations. Further, the upstream and downstream reach lengths cannot be measured since the upstream and downstream piping is buried underground. Given that the meter installation information is not available, it will be assumed that there is no additional error due to the configuration of the upstream or downstream piping.

D. Sampling

Unlike SCADA systems, chart recorders and totalizers do not receive a digital signal but rather an analog signal. This allows the chart totalizers and recorders to continuously receive the signal from the pressure transmitters. Given this, sampling rate is not considered an uncertainty component for this application.

E. Pressure Differential Measurement

Fischer-Porter Model 50DPF110 pressure transmitters were used on all three of the finished water meters during the study period and thus will be considered in this analysis. They have since be replaced with Rosemount pressure transmitters. The Fischer-Porter pressure transmitter's accuracy of ± 0.25 percent of span includes combined effects of repeatability, linearity, and hysteresis. Stability was not provided in the manufacturer specifications and thus assumed to not be a significant source of error. The transmitter's accuracy is systematic in nature with an unknown bias direction. The dead band is reported to be 0.01 percent of span and is considered random in nature. The temperature effect is 0.25 percent of span per 50°C (122°F). The span of the transmitter is assumed to be 200 inches of water since this is the span closest to the maximum differential pressure, (115.57 inches of water) of the venturi meter No. 3. It is assumed that the water temperature variation is similar to the lake temperature variation, about a 40 degree range between 32 to 70 degrees F. The uncertainty due to temperature effect is systematic in nature with an unknown bias direction. Static pressure effect, supply voltage effect and mounting position effects were assumed to be insignificant compared to the other uncertainties.

F. Dry Calibration of Pressure Transmitters

To calibrate the differential pressure transmitters, the pressure is measured using a Meriam manometer. The corresponding mA dc output is then measured with a Fluke Digital RMS multimeter for five points over the range. The accuracy of the manometer is ± 0.5 of the minor increment reading. This accuracy value assumes that the scale of the manometer is correct and that the fluid used in the manometer is of the correct density. The manometer has a minor increment of 0.2 inches of water, therefore the manometer reads to an accuracy of ± 0.1 inches of water. The accuracy of the DC current reading for the multimeter is ± 0.75 percent of the reading plus one digit of display. It is assumed that the multimeter reads to the hundredths place.

The accuracy of the multimeter will be systematic in nature with an unknown bias direction. Although the direction of the bias is not known, the direction will be the same for all three finished water meters. The accuracy of the manometer is assumed to be random in nature since its reading is dependent on the manometer reader's interpretation.

G. Flow Totalizer

Each finished water meter is equipped with a Fischer Porter 51B1102 chart recorder/totalizer. According to manufacturer specifications, the flow totalizers/chart recorders have an accuracy of ± 0.5 percent of span, a deadband of ± 0.2 percent of span and a temperature effect of ± 0.5 percent of span for a 28°C (50°F) change in temperature. It is assumed that linearity and repeatablity are included in the accuracy value. In this case, the span was assumed to be the span of the venturi-type meter (0 to 15 millions of gallons per day [MGD]) to which the pressure transmitter was connected. The accuracy and temperature affects are systematic in nature with an unknown bias direction. The deadband is random in nature.

H. Dry Calibration of the Flow Totalizer

A Transmation PPS Null Potentiometer is used as the current source for calibrating the chart recorder/totalizers for five points over the range. The corresponding output mA dc signal is read using the Fluke Digital multimeter. The potentiometer's accuracy is reported as ± 0.1 percent of range or ± 0.06 percent of reading. Since ± 0.1 percent of range is more conservative, it will be used in the analysis. The Transmation PPS null Potentiometer is available in a 0-52 mA range or a 0-22 mA range. Since pressure transmitters typically produce a 4 to 20 mA output, it is assumed that the City's Transmation PPS Null Potentiometer has a 0-22 mA range. The accuracy of the DC current reading for

the multimeter is ± 0.75 percent of the reading plus one digit of display. It is assumed that the multimeter reads to the hundredths place. The accuracies of the potentiometer and multimeter are systematic in nature with an unknown bias direction. Although the direction of the bias is not known, the direction will be the same for all three finished water meters.

3. Sample Uncertainty Calculation for Effluent Meters

To demonstrate how the uncertainty of the measured volume pumped through the Waukegan plant was estimated, a series of sample calculations follows. The method used to estimate the uncertainty is similar to that described in the *Technical Review of Lake Michigan Water Withdrawal by the City of Evanston*. Please refer to this document for background on the statistical handling of measurement uncertainty. City provided the daily logs of three, 2-week periods. These time periods were the first 14 days in September 1998, and February and May 1999. It was assumed that the Waukegan's pumpages over these time periods were representative of the typical pumpages. No hourly flow data was available for the Waukegan Plant. Additionally, flow data was not available for each individual finished water meter. According to the City, the water passing through each of the three finished water meters is determined by the demand placed on their respectively water mains. Since this varies, the City was unable to provide a rough breakdown of what fraction of flow passes through each of the three finished water meters. Therefore, for this analysis, it is assumed that the water is split equally between the three finished water meters. The uncertainty of the daily readings can be obtained using these assumptions. The uncertainties can be reported as the standard deviation of the measurements (expressed by the variable *s*) or in relative terms (expressed by the variable *CV*, which is the standard deviation of the measurements divided by the mean of the measurements).

A. Uncertainty of Hourly Flow Measurements

Hourly flow measurements were not available. However, to provide some idea of the uncertainty of the meter's hourly flow measurements, it will be assumed that every hourly flow rate for a given date in the study period will be equal to its average daily flow rate.

(1) Systematic (Bias) Error

The majority of the error components are systematic in nature. These systematic errors include error from the venturi, the pressure transmitters, flow totalizers/chart recorders and the calibration equipment. To determine the uncertainty of the hourly flow measurements, all uncertainties need to be in terms of percent accuracy of actual rate. The error associated with the venturi is already expressed in these terms. However, the accuracy associated with the pressure transmitters, flow totalizers/chart recorders and calibration equipment are in terms of percent accuracy per calibrated span, upper range and pressure reading.

As discussed in Section 1.B, insufficient information on the three finished water meters was provided to use the standard equation for the flow through a venturi type meter. The City did provide a flow versus differential pressure curve for finished water meter No. 3. Finished water

meter Nos. 1 and 2 do not have flow versus differential pressure curves. Given that insufficient information is available for all three finished water meters and that these meters are all the same size, finished water meter No. 3's flow versus differential pressure curve will be used for all three finished water meters in the following calculations. This curve is provided in Appendix B.

For illustration of the uncertainty calculations, we will be examining the pumping characteristics on September 1, 1998. At the Waukegan plant on this day, a total of 9.01 MGD was pumped through the facility. As mentioned above, the flow through each meter is unknown, so it will be assumed that the total flow of 9.01 MGD is divided evenly among the three finished water meters . With this assumption 3.00 MGD is pumped through each finished water meter on September 1, 1998. Additionally, since hourly flow values were not available, we will assume that each hourly flow value for a given day is equal to the average daily flow value. Using the flow versus differential pressure table discussed above, it is determined that the corresponding differential pressure to 3.00 MGD is 4.88 inches of water.

The pressure differentials of the three finished water venturi-type meters are measured using Fischer-Porter pressure transmitters. Based on the manufacturer's performance specifications, the pressure transmitter's accuracy is ± 0.25 percent of span and its temperature effect is 0.25 percent of span per 50°C (122°F). The span of the transmitter is assumed to be 200 inches of water. Thus, the uncertainty in the pressure differential measurement due to accuracy would be ± 0.500 inches of water (i.e., ± 0.0025 times 200) for all three finished water meters. The uncertainty in the flow rate due to the accuracy of the pressure transmitter for all three finished water meters would then be:

$$CV_{Qa} = \frac{Xs_p}{\Delta h} = \frac{(0.5)(\pm 0.500in)}{4.88in} = \pm 5.123\% \qquad \textit{Equation (1)}$$

Where:

CV_{Qa} = The uncertainty in the flow rate due to the accuracy of the pressure transmitter.

s_p = An uncertainty in the pressure transmitter (due to transmitter accuracy in this case).

X = The sensitivity coefficient equal to 0.5 for the pressure transmitter as flow is directly proportional to the square root of the pressure differential.

Δh = The pressure differential.

See *Technical Review of Lake Michigan Water Withdrawals by the City of Evanston* for additional information on the sensitivity coefficient, *X*. The uncertainty in the flow rate due to the transmitter's accuracy, and temperature affect for the finished water meters is shown in Table 1.

Note that the model assumes that the discharge coefficient, throat area, and throat to approach diameter ratio (i.e. β-ratio) introduce no errors to the discharge calculations. That is, the differential pressure head of the venturi meter is the only source of error or uncertainty.

The uncertainty of the multimeter that is used in calibrating the pressure transmitters is reported as ± 0.75 percent of reading plus one count. It is assumed that the multimeter reads to the hundredths place. The current differential is linear to the flow rate with 4 mA corresponding to zero flow, and 20 mA corresponding to flow meter capacity, which is 15 MGD. Using this relationship, for the first hour on September 1, the corresponding current would be 7.2 mA for all three finished water meters. Thus, the uncertainty in the current component of the calibrator would be ± 0.064 mA (i.e., ± 0.0075 times 7.2 mA, plus 0.01mA) for each of the finished water meters. The uncertainty in the flow rate due to current component of the calibrator for each finished water meter would then be:

$$CV_{Qa} = \frac{Xs_i}{\Delta i} = \frac{(1.0)(\pm 0.064mA)}{7.2mA} = \pm 0.889\% \qquad \textit{Equation (2)}$$

where:

s_i = Uncertainty due to the current reading.

Δi = Current differential.

X = The sensitivity coefficient equal to 1.0 for the multimeter as flow is directly to amperage.

According to manufacturer specifications, the flow totalizers/chart recorders have an accuracy of ±0.5 percent of span and a temperature effect of ±0.5 percent of span for a 28°C (50°F) change in temperature. In this case, the span was assumed to be the span of the venturi-type meter (0 to 15 MGD) to which the pressure transmitter was connected. Thus, the uncertainty in the accuracy of the flow totalizers/chart recorders would be ± 0.075 MGD (i.e., ± 0.005 times 15 MGD) for each of the finished water meters. The uncertainty in the flow rate due to accuracy of the flow totalizer/chart recorder for each finished water meter would then be:

$$CV_{Qa} = \frac{Xs_p}{\Delta h} = \frac{(1.0)(\pm 0.075\,MGD)}{3.0\,MGD} = \pm 2.500\%$$ *Equation (3)*

A Transmation PPS Null Potentiometer is used as the current source for calibrating the chart recorder/totalizers. The potentiometer's accuracy is reported as ± 0.1 percent of range or ± 0.06 percent of reading. Since ± 0.1 percent of range is more conservative, it will be used in the analysis. The City's Transmation PPS Null Potentiometer is assumed to have a 0-22 mA range. Thus, the uncertainty to the potentiometer would be ± 0.022 mA (i.e., ± 0.001 times 22 mA) for all three finished water meters. The uncertainty in the flow rate due to the accuracy of the potentiometer for all three finished water meters would then be:

$$CV_{Qa} = \frac{Xs_i}{\Delta i} = \frac{(1.0)(\pm 0.022mA)}{7.2mA} = \pm 0.306\%$$ *Equation (4)*

The uncertainty in the flow rate due to the flow totalizers and calibration equipment for the finished water meters is shown in Table 1.

Table No. 1
Uncertainty of the Systematic Components from the Pressure Transmitter, Flow Totalizer/Chart Recorder and Calibration Equipment for the First Hourly Reading on September 1, 1998, for Each Individual Finished Water Meter*

Venturi No.	Instrument	Uncertainty Source	CV for Δh or ΔmA	URL or Calibrated Span	Uncertainty for Δh or ΔmA	CV for Flow (%)
1*	Fischer Porter	Pressure Transmitter	0.25% of span	200 in. H_2O	0.500 in. H_2O	5.123
	Fischer Porter	Pressure Transmitter	0.25% of span per 122°F	200 in. H_2O	0.164 in. H_2O	1.680
	Fluke	Calibrator for Pressure Transmitters	0.5% of reading + 1 digit**	N/A	0.064 mA	0.889
	Fischer Porter	Flow Totalizer	0.5% of span	15 MGD	0.075 MGD	2.500
	Fischer Porter	Flow Totalizer	0.5% of span/50°F	15 MGD	0.060 MGD	2.000

Venturi No.	Instrument	Uncertainty Source	CV for Δh or ΔmA	URL or Calibrated Span	Uncertainty for Δh or ΔmA	CV for Flow (%)
	Transmation	Calibrator for Flow Totalizers	0.1% of range	22 mA	0.022 mA	0.306
	Fluke	Calibrator for Flow Totalizers	0.5% of reading + 1 digit**	N/A	0.064 mA	0.889

* *Note that systematic components will be the same for all three finished water meters since they use the same flow versus differential pressure curve and have the same flow rate passing through them. Given this, information for only one finished water meter was provided.*

** *1 digit is assumed equal to 0.01.*

In this study, the bias uncertainty estimates were broken down into three categories:

- Bias uncertainty with a known bias direction.
- Bias uncertainty with an unknown bias, but known to be in the same direction for each meter.
- Bias uncertainty with an unknown bias direction.

Explanation of this breakdown was detailed in the Technical Review of Lake Michigan Water Withdrawals by the City of Evanston. Table 2 lists the type of bias uncertainty for each of the bias estimates for the first hourly readings for each of the three finished water meters. Additionally, Table 2 also provides the absolute bias estimates for the first hourly readings taken from each of the three finished water meters based on the following equation:

$$s_b = CV_{flow} \cdot Q_{\substack{first \\ hour}} = \pm(0.05.123)(3.00\,MGD) = \pm 0.154\,MGD \qquad \textit{Equation (5)}$$

where:

S_b is the standard deviation (or absolute uncertainty) of the flow measurement due to the respective systematic uncertainty estimate

CV_{flow} is the relative uncertainty in the flow rate and $Q_{first\ hour}$ is the flow for the first hour.

Table 2
Absolute Bias Estimates for the First Hourly Readings Taken on September 1, 1998, for Each Individual Finished Water Meter*

Venturi No.	Bias Component	Type of Bias	CV_b(%)	S_b (MGD)
1*	Venturi	Direction unknown	±1.500	±0.045
	Approach lengths	N/A	N/A	N/A
	Pressure transmitters			
	– *Accuracy*	Direction unknown	± 5.123	± 0.154
	– *Temperature*	Direction unknown	± 1.680	± 0.050
	Calibrators for Pressure Transmitters – *multimeter*	Direction unknown, but in same direction for all meters	± 0.889	± 0.027
	Flow Totalizer/Chart Recorder			
	– *Accuracy*	Direction unknown	± 2.500	±0.075
	– *Temperature*	Direction unknown	± 2.000	±0.060
	Calibrators for Flow Totalizer/Chart Recorder			
	– *Potentiometer*	Direction unknown, but in same direction for all meters	±0.306	±0.009
	– *multimeter*		± 0.889	± 0.027

* *Note that systematic components will be the same for all three finished water meters since they use the same flow versus differential pressure curve and have the same flow rate passing through them. Given this, information for only one finished water meter was provided.*

The systematic uncertainty estimates for each of the finished water meters can be combined as shown below in *Equation (7)* to determine the overall hourly systematic uncertainty for September 1, 1998. To determine the uncertainty of the sum of the three measurements, the individual uncertainty estimates should be combined on the basis of absolute uncertainty (i.e., standard deviations) and not relative uncertainty (i.e., coefficient of variation).

$$S_b = \sum_{i=1}^{l_1}\sum_{j=1}^{m} S_{b_{ij\ \text{direction known}}} \pm \left[\sum_{i=1}^{l_2}\sum_{j=1}^{m} S^2_{b_{ij\ \text{direction unknown}}} + \sum_{i=1}^{l_3}\left(\sum_{j=1}^{m} S_{b_{ij\ \text{unknown but in same direction}}}\right)^2\right]^{\frac{1}{2}} \qquad \textit{Equation (6)}$$

Where :

S_b	=	Combined uncertainty or standard deviation of the flow measurement.
$S_{bij\ direction\ known}$	=	Absolute bias uncertainty of known direction for measurement *i,j*.
$S_{bij\ unknown\ but\ in\ same\ direction}$	=	Absolute bias uncertainty of unknown direction but known to occur in the same direction for each meter for measurement *i,j*.
$S_{bij\ direction\ unknown}$	=	Absolute bias uncertainty of unknown direction for measurement *i,j*.
m	=	The number of meters.
l_1, l_2, l_3	=	The number of uncertainty components in $S_{bij\ direction\ known}$, $S_{bij\ direction\ unknown}$, and $S_{bij\ unknown\ but\ in\ same\ direction}$, respectively.

For the first hour, using *Equation (6)*, the overall absolute bias uncertainty was found to be 0.355 MGD, which corresponds to a relative uncertainty of 3.94 percent (i.e., 0.355MGD divided by the total flow rate of 9 MGD). This process was repeated for each of the 24-hour readings taken during the day. The results are provided in Table 3.

(2) Random Error

The deadband of the pressure transmitters, the deadband of the totalizer/chart recorder and the manometer were identified as being random in nature. The deadband for the pressure transmitters is ± 0.01 percent of span with the span being 200 inches of water. For each of the finished water meters, the relative random uncertainty of the pressure transmitter's deadband is ± 0.208 percent as determined by applying the methodology shown in Equation (1). Therefore,

during the first hourly measurement on September 1, 1998, the absolute random uncertainty for the pressure transmitter's deadband would be ± 0.006 MGD (±0.00208 times 3.0 MGD) for each of the finished water meters.

The deadband for the totalizer/chart recorder is ±0.20 percent of span. The span is assumed to be the span of the venturi meter (0 to 15 MGD). Thus, each finished water meter, the absolute random uncertainty due to the deadband of the totalizer/chart recorder would be ± 0.030 MGD (± 0.002 times 15 MGD). Hence, the relative uncertainty due to the deadband of the totalizer/chart recorder would be ± 1.000 percent (i.e., ± 0.030 MGD divided by 3 MGD) for the first hourly measurement on September 1, 1998.

The uncertainty of the manometer that is used in calibrating the pressure transmitters is reported as ± 0.10 inches of water. This uncertainty can be converted to percent accuracy of actual flow rate by applying the following equation:

$$CV_{Qa} = \frac{Xs_p}{\Delta h} = \frac{(0.5)(\pm 0.100in)}{4.88in} = \pm 1.025\% \qquad \textit{Equation (7)}$$

And the corresponding absolute uncertainty of the manometer would be ±0.031 MGD (±0.01025 times 3 MGD) for each of the finished water meters during the first hour on September 1, 1998.

The overall absolute random uncertainty can be determined by combining the absolute random uncertainties due to the deadband of the pressure transmitters, the deadband of the totalizer/chart recorder and the manometer for all three finished water meters using the root-mean-square method. The method results in an overall random uncertainty of ± 0.075 MGD or ± 0.83 percent (i.e., ±0.075MGD divided by 9 MGD). This process was repeated for each of the 24-hour readings taken during the day. The results are provided in Table 3.

(3) Combining Systematic and Random Errors

The systematic and random errors can be combined using the following methodology:

$$S_b = \sum_{i=1}^{l_1}\sum_{j=1}^{m} S_{b_{ij\,\text{direction known}}} \pm \left[\sum_{i=1}^{l_2}\sum_{j=1}^{m} S^2_{b_{ij\,\text{direction unknown}}} + \sum_{i=1}^{l_3}\left(\sum_{j=1}^{m} S_{b_{ij\,\text{unknown but in same direction}}}\right)^2 + \sum_{i=1}^{l_4}\sum_{j=1}^{m} S^2_{r_{ij}}\right]^{\frac{1}{2}} \qquad \textit{Equation (8)}$$

Where:

S_{rij} = Absolute random uncertainty.
I_4 = The number of uncertainty components in S_{rij}.

Using *Equation (8)*, the overall uncertainty of the sum of the three flow measurements made in the first hour of September 1, 1998, is 0.363 MGD, or 4.03 percent.

If hourly flow data was available, this process would be repeated for each of the 24-hour readings taken during the day. However, only daily average flows were available, so to provide some indication of the accuracy of the hourly flow values, the average daily flow was assumed to be equal to each of the 24-hourly flow values. These results over the study period can be seen in Table 3. Over the entire study period, the average uncertainty of an hourly flow measurement, *CV*, was also found to be ± 4.27 percent. The average 95-percent confidence interval of an hourly flow measurement, *CI*, would then be equal to ± 8.37 percent (4.27 times 1.960[1]).

Table 3
Systematic, Random, and Overall Uncertainty Estimates for the Hourly Flow Measurements (Assuming that Average Daily Flow Value is Equal to Each of the Hourly Flow Values) Made Over the Study Period

Hour	Total Flow (MGD)	CV_b (%)	S_b (MGD)	CV_r (%)	S_r (MGD)	Overall *CV* (%)
September 1	9.00	± 3.94	± 0.355	± 0.83	± 0.075	± 4.03
September 2	10.35	± 3.37	± 0.349	± 0.70	± 0.073	± 3.45
September 3	9.56	± 3.72	± 0.355	± 0.78	± 0.075	± 3.80
September 4	9.88	± 3.54	± 0.350	± 0.74	± 0.073	± 3.62
September 5	11.03	± 3.11	± 0.344	± 0.64	± 0.071	± 3.18
September 6	10.98	± 3.12	± 0.342	± 0.64	± 0.071	± 3.18
September 7	9.88	± 3.54	± 0.350	± 0.74	± 0.073	± 3.62
September 8	8.89	± 4.16	± 0.370	± 0.88	± 0.078	± 4.25
September 9	8.78	± 4.17	± 0.366	± 0.88	± 0.077	±4.27
September 10	9.11	± 3.93	± 0.358	± 0.83	± 0.076	± 4.02

[1] A multiplier of 1.960 was used to determine the confidence interval since we are assuming that the average daily flow value is equal to the 24 hourly flow values and hence there would be a total of 1008 samples (42 days times 24 hours/day) used in determining the confidence interval.

Hour	Total Flow (MGD)	CV_b (%)	S_b (MGD)	CV_r (%)	S_r (MGD)	Overall CV (%)
September 11	9.30	± 3.91	± 0.364	± 0.82	± 0.076	± 4.00
September 12	10.33	± 3.37	± 0.349	± 0.70	± 0.073	± 3.45
September 13	9.95	± 3.53	± 0.351	± 0.74	± 0.074	± 3.61
September 14	10.55	± 3.25	± 0.343	± 0.68	± 0.071	± 3.32
February 1	8.24	± 4.79	± 0.395	± 1.01	± 0.083	± 4.89
February 2	8.95	± 4.16	± 0.372	± 0.87	± 0.078	± 4.25
February 3	8.82	± 4.17	± 0.368	± 0.88	± 0.078	± 4.26
February 4	8.82	± 4.17	± 0.368	± 0.88	± 0.078	± 4.26
February 5	8.21	± 4.79	± 0.394	± 1.01	± 0.083	± 4.90
February 6	8.50	± 4.45	± 0.379	± 0.94	± 0.080	± 4.55
February 7	8.72	± 4.18	± 0.365	± 0.88	± 0.077	± 4.27
February 8	9.04	± 3.94	± 0.356	± 0.83	± 0.075	± 4.03
February 9	8.13	± 4.80	± 0.390	± 1.01	± 0.082	± 4.91
February 10	9.08	± 3.93	± 0.357	± 0.83	± 0.076	± 4.02
February 11	8.25	± 4.79	± 0.395	± 1.01	± 0.083	± 4.89
February 12	8.24	± 4.79	± 0.395	± 1.01	± 0.083	± 4.89
February 13	8.75	± 4.18	± 0.365	± 0.88	± 0.077	± 4.27
February 14	8.48	± 4.46	± 0.378	± 0.94	± 0.080	±4.55
May 1	8.21	± 4.79	± 0.394	± 1.01	± 0.083	± 4.90
May 2	8.35	± 4.47	± 0.373	± 0.95	± 0.079	± 4.57
May 3	8.98	± 4.15	± 0.3.73	± 0.87	± 0.078	± 4.24
May 4	8.04	± 4.81	± 0.387	± 1.02	± 0.082	± 4.92
May 5	8.55	± 4.45	± 0.380	± 0.94	± 0.080	± 4.55
May 6	8.15	± 4.80	± 0.391	± 1.01	± 0.082	± 4.90
May 7	7.94	± 4.82	± 0.383	± 1.02	± 0.081	± 4.93
May 8	8.57	± 4.45	± 0.381	± 0.94	± 0.080	± 4.54
May 9	8.48	± 4.46	± 0.378	± 0.94	± 0.080	± 4.55
May 10	8.43	± 4.46	± 0.376	± 0.94	± 0.080	± 4.56
May 11	8.79	± 4.17	± 0.367	± 0.88	± 0.077	± 4.26

Hour	Total Flow (MGD)	CV_b (%)	S_b (MGD)	CV_r (%)	S_r (MGD)	Overall CV (%)
May 12	8.29	± 4.48	± 0.371	± 0.95	± 0.079	± 4.58
May 13	8.46	± 4.46	± 0.377	± 0.94	± 0.080	± 4.56
May 14	8.51	± 4.45	± 0.379	± 0.94	± 0.080	± 4.55

B. Uncertainty of Daily Volume Measurements

An estimate of the uncertainty of the daily volume pumped through the station can be obtained from the 24 hourly flow measurements. Technically, 24 hourly flow values were not available in this study, but it is assumed that the average daily flow and each of the 24 hourly flow values for a day are equal. The volume pumped through the Waukegan Plant is the average of the 24 hourly flow measurements times 1 day. For September 1, 1998, the average volume pumped through the station is 9.0 million gallons (MG).

The uncertainty of the systematic daily volume measurements can be determined using the following equation:

$$CV_{Vb} = CV_{bV_{\substack{direction\\known}}} + \frac{\Delta t}{m_v}\left(\sum_{k=1}^{n} Q_k^2 CV^2_{b_{k_{\substack{direction\\unknown}}}} + \left(\sum_{k=1}^{n} Q_k CV_{b_{k_{\substack{unknown\\but\ in\ same\\direction}}}}}\right)^2\right)^{\frac{1}{2}}$$

Equation (9)

Where:

CV_{Vb} = Relative uncertainty of the total bias volume measurement.

$CV_{bV\ direction\ known}$ = Bias with known direction of the total volume measurement.

$CV_{bk\ direction\ unknown}$ = Bias error in individual flow measurement *ik* where the bias direction is unknown.

$CV_{bk\ unknown\ but\ in\ same\ direction}$ = Bias error in individual flow measurement *ik* where the bias direction is unknown, but in the same direction for all meters.

Δt = Time increment.

Q_k = Value of flow measurement *k*.

m_V = Sum of all n volume measurements.

In this case, the uncertainty of the measured volume can be expressed in relative terms because the terms Q_k and m_V taking into account the magnitude of the individual measurements.

Using *Equation (9)*, the relative systematic error, CV_{vb}, was ± 1.50 percent for September 1, 1998.

The average random uncertainty component for the daily volume can be obtained from the following expression:

$$CV_{Vr} = \pm \frac{\Delta t}{m_v}\left(\sum_{k=1}^{n} Q_k^2 CV_{rk}^2\right)^{\frac{1}{2}} \qquad \textit{Equation (10)}$$

Where:

CV_{rk} = Random error in individual flow measurement k.

CV_{Vr} = Relative uncertainty of the volume measurement.

Using *Equation (10)*, the relative random uncertainty of the daily volume, CV_{vr}, for September 1, 1998, is ± 0.17 percent.

The overall uncertainty of the daily volume can then be found by combining the systematic and random uncertainty components in the following manner:

$$CV_V = CV_{bV_{\substack{direction\\known}}} + \frac{\Delta t}{m_v}\left(\sum_{k=1}^{n} Q_k^2 CV_{b_{k_{\substack{direction\\unknown}}}}^2 + \left(\sum_{k=1}^{n} Q_k CV_{b_{k_{\substack{unknown\\but\ in\ same\\direction}}}}\right)^2 + \sum_{k=1}^{n} Q_k^2 CV_{r_k}^2\right)^{\frac{1}{2}} \qquad \textit{Equation (11)}$$

For the date in question, the overall uncertainty of the daily volume, CV_V, was found to be ± 1.51 percent, or ± 0.136 MG (± 1.51percent times 9.0 MG). The 95-percent confidence interval on the daily volume, CI_v, would then be ± 3.12 percent[2] (1.51 times 2.069). The average random, systematic,

[2] A multiplier of 2.069 was used to determine the confidence interval since we are assuming that each daily volume measurement is equal to the 24-hourly flow values and the confidence interval is based on these 24 samples.

and overall uncertainty for each day in each 2-week study period were found using the above method and are summarized in Table 4.

Table 4
Estimated Uncertainties for Daily Volumes for the Entire Study Period

Date	CV_{Vb} (%)	CV_{Vr} (%)	CV_V (%)	CI_V (%)
September 1	± 1.50	± 0.17	± 1.51	± 3.12
September 2	± 1.43	± 0.14	± 1.43	± 2.97
September 3	± 1.47	± 0.16	± 1.48	± 3.06
September 4	± 1.45	± 0.15	± 1.46	± 3.01
September 5	± 1.40	± 0.13	± 1.40	± 2.90
September 6	± 1.40	± 0.13	± 1.40	± 2.90
September 7	± 1.45	± 0.15	± 1.46	± 3.01
September 8	± 1.53	± 0.18	± 1.54	± 3.18
September 9	± 1.53	± 0.18	± 1.54	± 3.18
September 10	± 1.50	± 0.17	± 1.51	± 3.12
September 11	± 1.49	± 0.17	± 1.50	± 3.11
September 12	± 1.43	± 0.14	± 1.43	± 2.97
September 13	± 1.45	± 0.15	± 1.46	± 3.01
September 14	± 1.41	± 0.14	± 1.42	± 2.94
February 1	± 1.61	± 0.21	± 1.62	± 3.35
February 2	± 1.52	± 0.18	± 1.54	± 3.18
February 3	± 1.53	± 0.18	± 1.54	± 3.18
February 4	± 1.53	± 0.18	± 1.54	± 3.18
February 5	± 1.61	± 0.21	± 1.62	± 3.36
February 6	± 1.56	± 0.19	± 1.58	± 3.26
February 7	± 1.53	± 0.18	± 1.54	± 3.19
February 8	± 1.50	± 0.17	± 1.51	± 3.12
February 9	± 1.61	± 0.21	± 1.62	± 3.36

Date	CV_{Vb} (%)	CV_{Vr} (%)	CV_V (%)	CI_V (%)
February 10	± 1.50	± 0.17	± 1.51	± 3.12
February 11	± 1.61	± 0.21	± 1.62	± 3.35
February 12	± 1.61	± 0.21	± 1.62	± 3.35
February 13	± 1.53	± 0.18	± 1.54	± 3.19
February 14	± 1.56	± 0.19	± 1.58	± 3.26
May 1	± 1.61	± 0.21	± 1.62	± 3.36
May 2	± 1.57	± 0.19	± 1.58	± 3.27
May 3	± 1.52	± 0.18	± 1.53	± 3.17
May 4	± 1.61	± 0.21	± 1.63	± 3.36
May 5	± 1.56	± 0.19	± 1.57	± 3.26
May 6	± 1.61	± 0.21	± 1.62	± 3.36
May 7	± 1.62	± 0.21	± 1.63	± 3.37
May 8	± 1.56	± 0.19	± 1.57	± 3.26
May 9	± 1.56	± 0.19	± 1.58	± 3.26
May 10	± 1.57	± 0.19	± 1.58	± 3.26
May 11	± 1.53	± 0.18	± 1.54	± 3.18
May 12	± 1.57	± 0.19	± 1.58	± 3.27
May 13	± 1.57	± 0.19	± 1.58	± 3.26
May 14	± 1.56	± 0.19	± 1.58	± 3.26

C. Uncertainty of Annual Volume Measurements

The uncertainty in the annual volume pumped through the plant can be estimated using the estimated uncertainty in daily volume measurements. As mentioned earlier, the study period consisted of 2-week periods in September 1998, and February and May of 1999. In total, there were 42 days in the study period. Over this time period, the average systematic uncertainty for a daily volume measurement, CV_b, was determined to be ± 1.53 percent (± 0.81 percent from unknown biases and ± 1.30 percent from unknown biases known to be in the same direction for all meters) and the average random uncertainty for a daily volume measurement, CV_r, was estimated to be ± 0.18 percent. The average uncertainty in daily volume would then be ± 1.54 percent, and the average 95-percent confidence interval for the daily volume would be ± 3.19. The uncertainty in the annual volume pumped through the Waukegan Plant, CV_V can be determined as follows:

volume would then be ± 1.54 percent, and the average 95-percent confidence interval for the daily volume would be ± 3.19. The uncertainty in the annual volume pumped through the Waukegan Plant, CV_V can be determined as follows:

$$CV_V = CV_{b_{\substack{direction \\ known}}} \pm \left(\frac{CV^2_{b_{\substack{direction \\ unknown}}}}{n} + CV^2_{b_{\substack{unknown \\ but\ in\ same \\ direction}}} + \frac{CV_r^2}{n} \right)^{\frac{1}{2}}$$

$$= 0 \pm \left(\frac{0.81^2}{365} + 1.30^2 + \frac{0.18^2}{365} \right)^{\frac{1}{2}} = \pm 1.30\%$$

Equation (12)

The 95-percent confidence interval of the annual volume, CI_v, would then simply be ± 2.55 percent (± 1.30 times 1.960). The 95-percent confidence interval for the annual volume (± 2.55 percent) is slightly less than the 95-percent confidence interval for the daily volume (3.19 percent). Most of the random error and unknown bias error associated with the daily volume measurement is statistically canceled when determining the uncertainty of the annual volume.

4. Quality Assurance

If the water accounting system is moved to the lakefront, there is a concern that if one of the direct diverter's flow measurement systems goes down, that there would be no way to measure the withdrawals from the lake. Thus, it is desirable that the direct diverters have a backup measurement system and, if possible, some other independent check on the measurements to ensure that the measurements are reasonable and accurate.

The output signals from the venturi meters are transmitted to both a Fischer-Porter chart recorder/totalizer and a Fischer-Porter bar graph indicator. The flows are read and recorded from the Fischer-Porter totalizers on a daily basis. Since the raw water, internal plant use water and finished water lines are all metered, there are several means to obtain readings should one of the primary elements or its transmitter fail. There are no backup transmitters or data recorders at the Waukegan Plant.

The raw water, with adjustments made for internal plant use, can be compared to the finished water metering as an independent check of the flow measurement system used at the Waukegan Plant.

5. Summary of Inadequacies in the Current Metering Systems

The following areas of the metering system appear deficient.

- No manufacturer information is available for finished water meter Nos. 1 and 2. Further, no flow versus differential pressure curves have been established for these meters.

- No drawings of the meter installation were available to determine possible uncertainty due to meter installation.

- The uncertainty of the flow versus differential pressure curve for meter No. 3 is not known.

- The overall accuracy in estimating the water supply pumpage is dependent upon many measurement and analysis functions. The documented technical review and much previous work were focused on the accuracy of the pumpage measurements in hardware (i.e., meters, calibrator, pressure transmitter, etc.) and software (SCADA, etc.). This analyses does not take into account procedural errors such as inconsistent data in water supply pumpage as a result of the reporting mechanism.

6. Recommendations for Long-Term QA/QC and Improvements to Metering

Recommendations for long-term QA/QC and improvements to metering are as follows:

- Establish flow versus differential pressure curves for finished water meter Nos. 1 and 2.
- Routine auditing of various water withdrawal reports, as part of the long-term QA/QC, as a means of accounting for procedural errors.

7. Conclusions

Some of the important conclusions are summarized below:

- The lack of data, in particular, that regarding the flow meters and their installation, significantly limits the quality of this analysis. However, as a means of providing some numerical value for the Waukegan Plant's metering uncertainty, the results of the elements that could be quantified are provided below:

  - For operational purposes, the City can determine the hourly flow measurement reading to within ± 8.37 percent at the Waukegan Plant. This value takes into account the random and systematic uncertainty associated with the venturi meters, pressure transmitters, calibration equipment, and recording system. Note, however, that this value is based on the assumption that the average daily flow is equal to each of the 24-hourly flows.

  - On an annual basis, the total volume pumped through the plant can be determined to within ± 2.55 percent. The 95-confidence interval for the annual volume is narrower than the 95-percent confidence interval for the hourly flow measurements made at the Waukegan Plant because the random and unknown bias errors associated with the measurement are statistically canceled when the measurements are summed over a year's time.

- With the exception of the data recorders and transmitters, the metering system has redundancy or backup for quality assurance. Since the raw water, internal plant use water and finished water lines are all metered, there are several means to obtain readings should one of the data recorders or transmitters fail.

- The raw water, with adjustments made for internal plant usage, can be compared to the finished water metering as an independent check of the flow measurement system. The difference between the raw water minus internal plate metering and the finished water metering should be less than 2 percent. A difference greater than 2 percent indicates there may be a problem within the flow measurement system.

References

ABB Automation Inc., *Technical Specifications for the Fischer Porter 51b1102 Chart Recorder/Totalizer.*

American Society of Mechanical Engineers, Fluid Meters: Their Theory and Application. ASME, New York, 6th ed., 1971.

Fischer Porter, *Electronic Differential Pressure Transmitter–Series 50DPF100*, April 1982.

Fluke Electronics Corporation, *Digital Voltmeters and DMM's–Multipurpose Handheld*, 1998.

Hutton, Stanley P, *The Prediction of Venturi-Meter Coefficients and Their Variation with Roughness and Age.*

International Organization for Standardization, Measurements of Fluid Flows by Means of Pressure Differential Devices, ISO, Switzerland, 1991.

Mead & Hunt, Inc., *Technical Review of Lake Michigan Withdrawals – Southwest Pumping Station*, February 2002.

Mead and Hunt, Inc., *Technical Review of Lake Michigan Water Withdrawal by the City of Evanston–Draft*, July 2002.

Miller, Richard W., Flow Measurement Engineering Handbook, McGraw-Hill, New York, 1996.

Spitzer, David W., Industrial Flow Measurement. Instrument Society of America, North Carolina, 1990.

Telephone conversation between Nicole Grossen of Mead & Hunt and Leo Bacham of Meriam Instruments regarding the accuracy of Merium Manometers, October 2002.

Transmation Inc., *Instruction Book–1030 PPS Null Potentiometer.* April 1973.

Final Report

Technical Review of Lake Michigan Withdrawals Wilmette Water Plant

Village of Wilmette, Illinois

Prepared for:

U.S. Army Corps of Engineers – Chicago District
Chicago, Illinois

Prepared by:

MEAD & HUNT

June 2003

Table of Contents

Page

Executive Summary . . . . . E-i

1. General Description 1
   A. Summary of Operation 1
   B. Flow Measurement 1
   C. Flow Totalization 3
   D. Calibration 3

2. Uncertainty in Metering and Measurement Components 5
   A. Venturi-Type Meters 5
   B. Magnetic Flowmeters 5
   C. Turbo Meters 5
   D. Pressure Taps 6
   E. Meter Installation 6
   F. Sampling 8
   G. Pressure Differential Measurement 8
   H. Pulse-to-Analog Converter for the Turbo Meter Output 8
   I. Dry Calibration of Pressure Transducers 9
   J. Calibration of Danfoss Electronics 9
   K. Calibration of Turbo Meter 9
   L. Programmable Logic Controllers 9

3. Sample Uncertainty Calculation for Effluent Meters 11
   A. Uncertainty of 2-Hour Flow Measurements for Finished Water Meters 11
      (1) Systematic (Bias) Error 11
      (2) Random Error 17
      (3) Combining Systematic and Random Errors 18
   B. Uncertainty of Daily Volume Measurements for Raw Water Meter 19
   C. Daily Uncertainty of the Service Water Components 22
   D. Adjusted Finished Water Uncertainty 24
   E. Uncertainty of Annual Volume Measurements 25

4. Quality Assurance 27

5. Summary of Inadequacies in the Current Metering Systems 28

6. Recommendations for Long-Term QA/QC and Improvements to Metering 29

7. Conclusions 30

References 31

Appendix – Schematic of the Wilmette Water Plant

List of Tables

Table		Page
1	Summary of Venturi-Type Meter Used at the Wilmette Plant	2
2	Summary of Magnetic Meter Used at the Wilmette Plant	2
3	Specifications for the Carbon Tunnel and South Gallery Service Lines	3
4	Upstream Disturbances and Approximate Approach Lengths for the Finished Water Venturi Tube at the Wilmette Plant	6
5	Approximate Upstream and Downstream Approach Lengths for the Finished Water Magnetic Flowmeter at the Wilmette Plant	7
6	Approximate Upstream and Downstream Approach Lengths for the Service Water Meters at the Wilmette Plant	7
7	Uncertainty From the Pressure Transmitter and Calibration Equipment for the 6:00 p.m. Reading on September 1, 1999, for the 36-inch Finished Water Meter	14
8	Absolute Bias Estimates for the 6:00 p.m. Readings Taken on February 17, 1997	15
9	Summary of Magnetic Meters Systematic Uncertainty Components for the 6:00 p.m. Reading on September 1, 1999	16
10	Systematic, Random, and Overall Uncertainty Estimates for the Finished Water Meter's 2-Hour Flow Measurements Made on September 1, 1999	19
11	Estimated Uncertainties for the Finished Water Meter's Daily Volumes During the September 1, 1999, Study Period	21
12	Accuracy and Specifications of Service Water Components	23
13	Daily Uncertainties of the Plant Use Meters for the First 14 days in September of 1999	24

Executive Summary

Currently, diversion of water from Lake Michigan for the state of Illinois is measured at the Chicago Sanitary and Ship Canal at Romeoville. The Great Lakes Mediation Memorandum of Understanding established a lakefront diversion accounting system and specified a 3-year transition period to assess the technical acceptability of moving the diversion measurement system to the lakefront. A lakefront diversion accounting system requires metering of all domestic water withdrawals from Lake Michigan and the direct diversions into the Chicago Sanitary and Ship Canal system at the Chicago River, the Calumet River, and the North Shore Channel at Wilmette. During the 3-year transition period, the U.S. Army Corps of Engineers (USACE) has been tasked to initiate a technical review of the accuracy of the reported domestic withdrawals from Lake Michigan.

The USACE retained Mead & Hunt, Inc. to evaluate the accuracy of domestic withdrawals from Lake Michigan. A total of 12 pumping stations in the city of Chicago (City) and six suburban pumping stations will be evaluated. These evaluations include revisions to the investigations conducted on the City's Mayfair and Thomas Jefferson Stations and the village of Wilmette's Water Plant (Wilmette Plant) by the Illinois District of the U.S. Geological Survey. This report presents a summary of the flow measurement techniques at the Wilmette Plant as employed by the village of Wilmette (Village), as well as estimates of the uncertainty of daily and annual volume measurements. Presently, the Wilmette Plant consists of two raw meters, six inflow pipe meters, two service water meters, and two finished water meters.

To obtain an estimate of the uncertainty of an individual flow measurement, we examined the manufacturer's accuracy specifications for both the primary flow measurement devices (i.e., the venturi-type meters) and secondary measurement devices (i.e., the pressure transmitters). The Wilmette Plant's calibration technique, sampling technique, and device installation were also examined. All of the sources of uncertainty identified from this analysis were then classified as either random or systematic in nature. Using this information and the data logs provided by the Village, we obtained an estimate of the uncertainty of an individual flow measurement. From this information, an estimate of the uncertainty of the daily and annual volume withdrawn from the lake can be obtained using standard statistical techniques.

Some of the important conclusions are summarized below:

- For operational purposes, the Village can determine the 2-hour finished water flow measurement reading to within ± 1.74 percent at the Wilmette Plant. This value takes into account the random and systematic uncertainty associated with the venturi and magnetic meters, pressure transmitter, calibration equipment, and recording system.

- On an annual basis, the total volume pumped through the station can be determined to within ± 0.04 percent. The 95-confidence interval for the annual volume is narrower than the 95-percent confidence interval for the 2-hour flow measurements made at the Wilmette Plant because the random and unknown bias errors associated with the measurement are statistically canceled when the measurements are summed over a year's time.

- There is some form of backup system for all the measurements made at the Wilmette Plant. No loss of flow data is likely under most conditions.

- The raw water meters can be used as a check on the finished water flow measurement system. The difference between the raw and finished water values should be less than 2 percent. A difference greater than 2 percent indicates there may be a problem within the flow measurement system.

Technical Review of
Lake Michigan Withdrawals
Wilmette Water Plant
Village of Wilmette, Illinois

1. General Description

A. Summary of Operation

The Wilmette Water Plant (Wilmette Plant) has multiple metering locations. Lake Michigan water intakes to the Wilmette Plant are measured through two raw water ultrasonic meters. Six venturi meters are located within the inflow pipes. The finished water is metered through either a 24-inch Danfoss magnetic flowmeter or a 36-inch venturi meter. Two service water lines – the Carbon Tunnel and the South Gallery – are located downstream of the finished water meters and pumped back into the plant. Therefore, the water pumped through these service lines is actually metered twice by the finished water meters. To account for this, the two service water lines are also metered.

Although the withdrawals for the LMO reporting are measured through the two raw water meters, the uncertainty analysis presented in this report will be for the finished water meters since this is consistent with the overall goals of the study. Programmable Logic Controllers (PLCs) continuously monitor signals from these two high-lift meters, combine them and convert them to a totalizer that registers every 1,000 gallons. This totalizer is read every two hours at which time the readings are recorded on a daily log sheet An independent Fischer-Porter totalizer is also installed on the finished water metering to allow for individual and combined meter readings when the PLC's are down. The service water lines are manually read from the meter on a daily basis and recorded. The totalizer data for both the high lift meters and the service water lines are also displayed on a SCADA monitor, however, the SCADA is only used for display purposes and does not preform automatic recording. A plant schematic is included in the Appendix.

B. Flow Measurement

The Wilmette Plant uses a 36-inch BIF venturi and a 24-inch Danfoss Magnetic meter to measure the finished water flows. A total of eight pumps can discharge to these two meters. The 36-inch venturi, BIF

Model CTUAY venturi tube, with a β-ratio of 0.686, was installed in 1956. The meter's capacity is specified at 0 to 50 million gallons a day (MGD). Its specification[1] is listed in Table 1.

Table 1
Summary of Venturi-Type Meter Used at the Wilmette Plant

Manu-facturer	Model No.	Approach Pipe Diameter (in.)	Throat Diameter (in.)	β-Ratio	Coefficient of Discharge	Max. Flow Rate (MGD)	Calibrated Flow Range (MGD)	Max. Differential Pressure (in. of Water)*
BIF	CTUA Y	36	24.7	0.686	0.9842	50	0 to 25	20.28

* *The maximum differential pressure is for the maximum calibrated flow range of 25 MGD.*

The 24-inch Danfoss magnetic flowmeter was installed in April 1999. Based on magnetic induction principles, the magnetic flowmeter provides an obstructionless flowmeter that essentially averages velocity over the pipe area. Unlike differential producers that use Bernoulli's streamline energy equation, the magnetic flowmeter's operating principle makes it a true volumetric flow device (Miller, 1996). Its specifications are listed in Table 2.

Table 2
Summary of Magnetic Meter Used at the Wilmette Plant

Manufacturer	Model No.	Approach Pipe Diameter (in.)	Maximum Flow (MGD)
Danfoss	MAG 3100	24	18

The flows through the Carbon Tunnel and South Gallery service water lines are actually measured twice through the finished water meters. To account for this, each of these lines are metered with Sensus Technologies turbometers, which were installed in 1992. Specifications for each of the service water line meters are provided in Table 3.

[1] The coefficient of discharge was calculated using Equation (1) of this report and the beta-ratio, venturi diameter, calibrated maximum flow and calibrated maximum differential pressure that were provided by the Village.

Table 3
Specifications for the Carbon Tunnel and South Gallery Service Lines

Service Water Meter	Manufacturer	Model No.	Approach Pipe Diameter (in.)	Maximum Flow (MGD)
Carbon Tunnel Service Line	Sensus Technologies	W-350	3	0.58
South Gallery Service Line	Sensus Technologies	W-1000	4	1.73

C. Flow Totalization

The Programmable Logic Controllers (PLCs), (Square – D Model 400's), continuously monitor the 4-20 mA signals from the two finished water meters, combine them and send them to the totalizer, which registers every 1,000 gallons. These totals are displayed on the SCADA computer screens from which the operator reads the totals every 2 hours and records them on a daily log sheet. Note that the SCADA only acts as a display and not as a totalizer. In addition, the two finished water meters are connected to a Fischer-Porter totalizer which can be used as a backup totalizer should there be operational problems with the Square – D Model 400s. The service water lines are manually read from the meters on a daily basis. The flow data from the service water lines is also sent to the SCADA system, which displays each meter's current flow reading.

D. Calibration

An effective calibration procedure should calibrate both the primary flowmeter and its secondary measurement device. First, the secondary measurement device, such as a pressure transducer, should be calibrated to make sure it is reading correctly. Then, the flowmeter itself should be calibrated to make sure it is functioning properly. Although the Village performs wet calibrations on their raw water meters, they do not on their finished water meters.

A dry calibration is performed on the venturi meter's differential pressure transmitter annually. This procedure consists of flushing the lines, applying/measuring inches of water to the high side of the transmitter. The finished water venturi meter is calibrated using an Ametek/Mansfield and Green Pneumatic Dead Weight Tester (Model PK-6+54WC, Serial No. 78505) and reading the corresponding mA dc output for 5 points over the range. The actual venturi meter is not calibrated, rather the Village assumes the manufacturer's rating tables are correct.

According to the Village, the magnetic meter does not require calibration, although, on a regular basis, this meter is programmatically checked to ensure the proper values are entered. Conversations with technical support at Danfoss confirmed that regular calibration is not required since the meter has no moving parts. The service water meters are turbo meters that do not require calibration.

The station is manned 24 hours a day. If the operators notice a problem, the station has manual system computation capabilities until the problem is resolved.

2. Uncertainty in Metering and Measurement Components

A. Venturi-Type Meters

The BIF venturi meter was installed in 1956. Specifications for this meter were not available. Spitzer reports that classical venturi accuracy ranges from ± 0.7 to ± 1.5 percent, depending on venturi construction. It is assumed that this percent is percent of flow, since this is typically how venturi accuracy is expressed. As specific construction information for the 30-inch finished water meter is unknown, ± 1.5 percent will be used as it is most conservative. This uncertainty is systematic in nature with a unknown bias direction. This value is based on the meter having an adequate length of upstream piping. Since the BIF meters have been in use for 45 years, a possibility of pitting, tuberculation, and corrosion in the critical areas exists. Like the meters inspected at the City of Chicago's Southwest Station, the throat of the finished water meter at the Wilmette Plant is lined with bronze. Bronze is known for its ability to resist corrosion and formation of tubercles. Therefore, it is reasonable to assume that any significant corrosion or tuberculation would occur on the inlet piping only. Since the water pumped through the Wilmette Plant and the Southwest Station have similar water chemistry and are treated in a similar manner, it is assumed that if the finished water venturi at the Wilmette Plant was inspected, the results would be similar to the results of the meter inspection at the Southwest Station. Therefore, based on the determinations made in the *Technical Review of Lake Michigan – Southwest Pumping Station*, any error due to corrosion and tuberculation is considered insignificant at the Wilmette Plant.

B. Magnetic Flowmeters

The manufacturer's specifications state an accuracy of 0.5 percent of the rate. A Danfoss representative said that the 0.5 percent includes both the flow tube and the analog-digital converter. The 0.5 percent is the accuracy when velocities are between 1.5 feet per second (fps) and 30 fps. If the velocity is less than 1.5 fps, the accuracy is determined by dividing 0.82 by the velocity. For example, for a flow of 2.02 MGD (1 fps), the accuracy would be 0.82 percent. This meter was installed in 1999. It is assumed that since it's a new installation that the manufacturer's accuracy is a reasonable value to assume.

C. Turbo Meters

The flows through the Carbon Tunnel and South Gallery service water lines are actually measured twice by the finished water meters. To account for this, each of these lines is metered with a Sensus Technologies turbo meter. Manufacturer specifications for these meters indicate an accuracy of 1.5 percent of actual flow through the meter. Since the turbo meters are relatively new, it is assumed that there is no additional error due to corrosion or tuberculation.

D. Pressure Taps

The venturi meter installation includes pressure taps. The taps that are used to measure the pressure should be square with no roughness, burrs, or wire edges (Miller, 1996). If this were not the case, then a bias error would be introduced due to the pressure taps. It was not practical to inspect the pressure taps of these meters. However, the flow measurement devices were constructed under a controlled manufacturing environment with very little opportunity for a pressure tap to be constructed poorly. Thus, it was assumed that the manufacturer constructed the pressure taps correctly and that no additional error would be introduced due to the pressure taps. Any uncertainty due to pitting around the pressure tap was already taken into account in the previous section.

E. Meter Installation

An appropriate minimum length of straight, circular pipe is required upstream of the flowmeter to guarantee that the flow is fully established, the velocity profile entering the meter is not distorted, and that the meter will preform properly. The length of this approach section depends on the meter type and the number and types of bends and fittings located upstream of the meter.

At the Wilmette Plant, the first upstream obstruction for the finished water venturi meter is a single bend located 47 feet upstream of the venturi. An unknown length of pipe extends to the next upstream obstruction, which is a valve. Table 4 indicates the minimum pipe lengths, as reported in ISO 5167-1:1991, required for both of these lengths of pipe given their upstream bends or fittings.

The approach length from the venturi to the first upstream fitting (a single bend) was adequate to guarantee that flow was fully established and the flow profile was not distorted. The exact approach length to the second upstream fitting (a valve) was unknown but, based on field investigations, exceeds the minimum required pipe length of 8.3 feet.

Table 4
Upstream Disturbances and Approximate Approach Lengths for the Finished Water Venturi Tube at the Wilmette Plant

Pipe Reach	Upstream Fitting	Approach Length (ft)	Required Pipe Length for Zero Error (ft)
First Upstream Length	Single bend	47.0	12.0
Second Upstream Length	Valve	Unknown*	8.3

* *Exact approach length is unknown but, based on field observations, exceeds the minimum required pipe length.*

Inadequate straight piping downstream of the meter can also affect the meter's accuracy. ISO 5167-1:1991 reference materials indicate that as long as the downstream length of straight piping exceeds four times the meter's throat diameter, no additional error is expected. The finished water venturi has a throat diameter of 2.1 feet (25 inches); therefore, 8.4 feet of downstream piping is required. The actual downstream length of straight pipe is approximately 10.5 feet. Therefore, the downstream pipe length is adequate to ensure no additional error due to downstream piping geometry.

Per the manufacturer, the Danfoss magnetic flowmeter requires approach and exit lengths of 10 feet and 6 feet, respectively, for a 24-inch pipeline. As shown in Table 5, the installation of the finished water magnetic flowmeter meets these requirements and thus there is no additional error caused by the meter's installation.

Table 5
Approximate Upstream and Downstream Approach Lengths for the Finished Water Magnetic Flowmeter at the Wilmette Plant

Pipe Reach	Approach Length (ft)	Required Pipe Length for Zero Error, ft
Upstream	11.0	10.0
Downstream	11.0+	6.0

Per the manufacturer, the Sensus Turbo meters require 5 pipe diameters of straight pipe upstream of the meter and 3 pipe diameters of straight pipe downstream of the meter. As shown in Table 6, the installation of each of the two service water meters meet these requirements and thus there is no additional error caused by the meter's installation.

Table 6
Approximate Upstream and Downstream Approach Lengths for the Service Water Meters at the Wilmette Plant

Service Water Meter	Upstream Approach Length (ft)	Upstream Required Pipe Length for Zero Error, ft	Downstream Length (ft)	Downstream Required Pipe Length for Zero Error, ft
South Gallery	5.0	1.7	3.5	1.0
Carbon Tunnel	4.5	1.3	2.3	0.8

F. Sampling

Additional uncertainty can also be introduced due to how the flow-measurement data is recorded. If, for example, a quantity varies sinusoidally, but that quantity is only measured at the times when the quantity is at a peak, then the average measurements will be higher than the true average. This would introduce a bias into the system. On the other hand, if a quantity is measured or sampled frequently, then there will be very little error introduced due to sampling. The flow rates through the Wilmette Plant is typically in excess of 10 MGD. The PLC combines the two individual meter readings and sends them to the totalizer, which registers every 1,000 gallons. This implies that daily volume measurements are actually composed of in excess of 10,000 individual flow measurements. Because the Village records the flow rate so often, there should be no error introduced due to sampling.

The flow data from the two plant use meters are taken directly from each meter's totalizer. Since these totalizers continuously record the flow data, there is no additional error due to sampling.

G. Pressure Differential Measurement

A Fischer-Porter Model (50 DPF100-2-CVS-AB-AA) differential pressure transmitter is used to measure flow through the BIF venturi meter on the 24-inch finished water line. It was assumed that the accuracy specifications provided by the manufacturer were correct. Note that in this application, the output signal from the pressure transmitters is linearly proportional to the input.

The accuracy of ± 0.25 percent of span includes combined effects of repeatability, linearity, and hysteresis. Stability was not provided in the manufacturer's specifications and thus assumed to not be a significant source of error. The transmitter's accuracy is systematic in nature with an unknown bias direction. The dead band is reported to be 0.01 percent of span and is considered random in nature. The temperature effect is 0.25 percent of span per 50 degrees Centigrade (122 degrees Fahrenheit). The span of the transmitter is 50 inches of water. It is assumed that the water temperature variation is similar to the lake temperature variation, about a 40-degree range between 32 to 70 degrees F. The uncertainty due to temperature effect is systematic in nature with an unknown bias direction. Static pressure effect, supply voltage effect, and mounting position effects were assumed to be insignificant compared to the other uncertainties.

H. Pulse-to-Analog Converter for the Turbo Meter Output

HPSU 1004-A Act-Paks are used to convert the pulsed output from the Carbon Tunnel and South Gallery's turbo meters to a 4-20 mA analog signal. Per the manufacturer, the accuracy of this converter is ± 2.0 percent of full-scale flow. The full-scale flow is 0.58 MGD for the Carbon Tunnel meter and 1.73 MGD for the South Gallery meter.

I. Dry Calibration of Pressure Transducers

The venturi meter's secondary measurement device is dry-calibrated annually. The Fischer-Porter pressure transmitter is calibrated using an Ametek/Mansfield and Green Pneumatic Dead Weight Tester (Model PK-6+54WC, Serial No. 78505) and a Fluke 87III multimeter. The dead weight tester is used to apply a known pressure and the multimeter is used to measure the corresponding electrical current.

Because the pressure transmitter is adjusted to the calibration equipment's reading, all of the random and systematic components will become a bias reported by the Fischer-Porter pressure transmitter. The accuracy of the dead weight tester is ± 0.05 percent of the indicated pressure reading and the accuracy of the multimeter is ±0.2 percent of the current reading.

Note, however, that the two parameters of the calibration equipment (accuracy of the dead weight tester and accuracy of the current multimeter) may not be totally uncorrelated since the pressure transmitter converts a physical measurement, the pressure, into an electrical signal while the multimeter loop current appears to be correlated to the pressure from the pressure module. Although, these parameters may not be totally uncorrelated, it was not accounted for in this analysis.

J. Calibration of Danfoss Electronics

The Village's Danfoss magnetic flowmeter was installed in April 1999 and came on-line in August 1999. The magnetic meter is programmatically checked to ensure the proper values are entered. Conversations with technical support at Danfoss indicated that calibration is not necessary since the meter has no moving parts. Therefore, there will be no additional uncertainty due to calibration of the Danfoss meter.

K. Calibration of Turbo Meter

Per the manufacturer's specifications, the pulse-to-analog converter is factory-set to a specified frequency and therefore field calibration is typically not required.

L. Programmable Logic Controllers

In order for the SCADA system to display the volume pumped through the Wilmette Plant, the analog signal from the Fischer-Porter pressure transmitter and Danfoss magnetic meter must be converted to a digital signal. This process is done using Programmable Logic Controllers (PLCs), (Square – D Model 400's). The Square-D model 400's accuracy for this conversion is ± 0.05 percent of the full-scale. In this case, the full-scale was assumed to be the upper range value of the venturi meter and the magnetic

flowmeter. The error due to the analog-to-digital conversion should be random in nature. Note that flow data for the plant-use meters is not totalized through the SCADA, but rather manually read from each of the meter's internal totalizers.

3. Sample Uncertainty Calculation for Effluent Meters

To show how the uncertainty of a finished water measurement was estimated, a series of sample calculations follow: For the finished water meters, the Village provided log readings for every 2 hours during the study period. The study period included the first 2 weeks in September 1999, and February and May 2000. It was assumed that this 6-week period was representative of the Village's withdrawals. It was also assumed that the Village's 2-hour withdrawal readings were constant over the 2 hours. The uncertainty of the 2-hour readings and the daily reading can be obtained using these assumptions. The uncertainties can be reported as standard deviation of measurement (expressed by the variable *s*) or in relative terms (expressed by the variable *CV*, which is the standard deviation divided by the mean of the measurements).

A. Uncertainty of 2-Hour Flow Measurements for Finished Water Meters

(1) Systematic (Bias) Error

The majority of the error components are systematic in nature. These systematic errors include error from the finished water venturi, the pressure transmitters (except deadband which is a random error), the pressure transmitter's calibration equipment, and the finished water magnetic meter.

On September 1, 1999, the first 2-hour period in which flow was routed through both the finished water venturi meter and magnetic meter was during the 6:00 p.m. reading. Therefore, the calculations for the 6:00 p.m. reading will be presented in order to show the 2-hour uncertainty calculations for both the venturi meter and the magnetic meter.

Venturi Meter Flow Measurements

To determine the uncertainty of the 2-hour flow measurements, all uncertainties need to be in terms of percent accuracy of actual flow rate. The errors associated with the venturi are already expressed in these terms. However, the accuracy associated with the pressure transmitters and calibration equipment are based on pressure values in terms of accuracy of the span or of percent of actual pressure reading.

The standard equation for the flow through a venturi-type meter is:

$$Q = \frac{C_d A_t}{\sqrt{1-\beta^4}} \sqrt{2g\Delta h}$$ *Equation (1)*

Where:

Q	=	Flow rate
C_d	=	Discharge coefficient
A_t	=	Area of the throat section
β	=	Ratio of the throat diameter to the approach section diameter
g	=	Acceleration due to gravity
Δh	=	Pressure differential across the meter

For the 36-inch finished water venturi, the discharge coefficient is 0.0.9842.

Note that the model assumes that the discharge coefficient, throat area, and throat to approach diameter ratio (i.e. β-ratio) introduce no errors to the discharge calculations. That is, the differential pressure head of the venturi meter is the only source of error or uncertainty.

The throat area, A_t, is:

$$A_t = \frac{\Pi(24.70)^2}{4} = 479.2in^2 = 3.33ft^2$$ *Equation (2)*

For the 6:00 p.m. reading on September 1, 1999, 9.93 million gallons (MG) passed through the 36-inch finished water meter. The pressure differential developed from this flow rate can be determined from *Equation (1)*.

$$\Delta h = \left[\frac{Q\sqrt{1-B^4}}{C_d A_t \sqrt{2g}}\right]^2 = 12\left[\frac{1.547(8.46MGD)\sqrt{1-(0.686)^4}}{(0.9842)(3.33ft^2)\sqrt{2(32.16ft/s^2)}}\right]^2 = 2.32in.$$ *Equation (3)*

The values of 12 and 1.547 that appear in *Equation (3)* are unit conversion factors to convert feet to inches and MGD to cubic feet per second (cfs), respectively.

The uncertainty of the pressure transmitter has two bias components: accuracy and temperature effect. The accuracy of the pressure transmitter is ± 0.25 percent of span and the temperature affect is 0.25 percent of span per 50 degrees C (122 degrees F). The transmitter's span is 50 inches of water. The uncertainty due to the accuracy would then be ± 0.125 inches of water (0.0025 times 50 inches of water) in this case. The uncertainty in this flow rate due to the accuracy of the pressure transmitter would then be:

$$CV_{Qa} = \frac{Xs_p}{\Delta h} = \frac{(1.0)(\pm 0.125in)}{2.32in} = \pm 5.39\% \qquad \textit{Equation (4)}$$

Where:

CV_{Qa}	=	Uncertainty in the flow rate due to the accuracy of the pressure transmitter.
s_p	=	Uncertainty in the pressure transmitter (due to transmitter accuracy in this case).
X	=	Sensitivity coefficient equal to 1.0 for the pressure transmitter as flow is directly proportional to the pressure differential.
Δh	=	Pressure differential.

See *Technical Review of Lake Michigan Water Withdrawals by the City of Evanston* for additional information on the sensitivity coefficient, *X*. The uncertainty in the flow rate due to the transmitter's accuracy and temperature affect for the 36-inch finished water meter is shown in Table 7.

The pressure transmitter is dry-calibrated using an Ametek/Mansfield and Green Pneumatic Dead Weight Tester. The accuracy of this calibration equipment is ± 0.05 percent of the indicated pressure reading. Thus, the uncertainty due to the accuracy of the pressure component of the calibrator would be ± 0.00116 inches of water (i.e., ± 0.0005 times 2.32) for the 24-inch finished water meter. The uncertainty in the flow rate due to pressure component of the calibrator for the 24-inch finished water meter would then be:

$$CV_{Qa} = \frac{Xs_p}{\Delta h} = \frac{(1.0)(\pm 0.00116in)}{2.32in} = \pm 0.05\% \qquad \textit{Equation (5)}$$

A summary of the uncertainty estimates due to the calibration equipment appears in Table 7.

Table 7
Uncertainty From the Pressure Transmitter and Calibration Equipment for the 6:00 p.m. Reading on September 1, 1999, for the 36-inch Finished Water Meter

Venturi	Instrument	Uncertainty Source	CV for Δh	Span or Reading	Uncertainty for Δh	CV for Flow (%)
36-inch finished water	Fischer-Porter	Pressure transmitter accuracy	0.25 percent of span	50 in. water	0.125 in. water	5.39
36-inch finished water	Fischer-Porter	Pressure transmitter temperature effect	0.25 percent of span per 122°F	50 in. water	0.041 in. water	1.77
36-inch finished water	Ametek/ Mansfield and Green	Calibrator accuracy	0.05 percent of pressure reading	2.70 in. water	0.00114 in. water	0.05

In this study, the bias uncertainty estimates will be broken down into three categories:

- Bias uncertainty with a known bias direction.
- Bias uncertainty with an unknown bias, but known to be in the same direction for each meter.
- Bias uncertainty with an unknown bias direction.

Table 8 lists the type of bias uncertainty for each of the bias estimates for the 6:00 p.m. reading taken from the 36-inch finished water venturi Additionally, Table 8 also provides the absolute bias estimates for the 6:00 p.m. reading taken from the 36-inch finished water venturi based on the following equation:

$$s_b = CV_{flow} \cdot Q_{\substack{first \\ hour}} = (0.0539)(8.46\,MGD) = 0.456\,MGD \qquad \textit{Equation (6)}$$

Where:

S_b	=	Standard deviation (or absolute uncertainty) of the flow measurement due to the respective systematic uncertainty estimate
CV_{flow}	=	Relative uncertainty in the flow rate
$Q_{first\ hour}$	=	Flow for the first hour

Table 8
Absolute Bias Estimates for the 6:00 p.m. Readings
Taken on February 17, 1997

Venturi	Bias Component	Type of Bias	CV_b (%)	S_b (MGD)
36-inch finished water	Venturi	Direction unknown	1.50	0.127
	Approach lengths	N/A	N/A	N/A
	Pressure transmitters			
	– *Accuracy*	Direction unknown	± 5.39	± 0.456
	– *Temperature*	Direction unknown	± 1.77	± 0.150
	Calibrator			
	– *Pressure accuracy*	Direction unknown	± 0.05	± 0.004
	–*Multimeter*	Direction unknown	±0.20	±0.017

Magnetic Meter Flow Measurements

The bias error components for the magnetic meter include the uncertainty due to the meter's accuracy. This uncertainty is already reported in percent of actual flow rate as summarized in Table 9. During the 6:00-p.m. flow reading, 9.93 MGD was routed through the finished water magnetic meter. Using this 2-hour reading and *Equation (6)*, each component's absolute systematic uncertainty can also be determined as shown in Table 9.

Table 9
Summary of Magnetic Meters Systematic Uncertainty Components for the 6:00 p.m. Reading on September 1, 1999

Bias Component	Type of Bias	CV_b (%)	S_b (MGD)
Magnetic meter	Direction unknown	± 0.50*	± 0.050
Approach lengths	N/A	N/A	N/A
Calibrator	N/A	N/A	N/A

* *The accuracy is 0.5-percent of actual flow rate when velocities are between 1.5 feet per second (fps) and 30 fps as was the case for the 600 p.m. reading on September 1. If the velocity is less than 1.5 fps, the accuracy is determined by dividing 0.82 by the velocity.*

Combining the Venturi and Magnetic Meter's Systematic Uncertainties

The systematic uncertainty estimates for the two finished water meters can be combined as shown below in *Equation (7)* to determine the overall systematic uncertainty for the 6:00 p.m. reading on September 1.

$$S_b = \sum b_{\substack{direction \\ known}} \pm \left[\left(\sum S_{\substack{b_{unknown} \\ but\ in\ same \\ direction}} \right)^2 + \sum S^2_{\substack{b_{direction} \\ unknown}} \right]^{\frac{1}{2}}$$ *Equation (7)*[2]

Where:

$S_{b\ direction\ known}$	=	Absolute bias uncertainty of known direction.
$S_{b\ unknown\ but\ in\ same\ direction}$	=	Absolute bias uncertainty of unknown direction, but known to occur in the same direction for each meter.
$S_{b\ direction\ unknown}$	=	Absolute bias uncertainty of unknown direction.

For the 6:00 p.m. reading on September 1, using *Equation (7)*, the overall absolute bias uncertainty was found to be ± 0.499 MGD, which corresponds to a relative uncertainty of ± 2.71 percent (i.e., ± 0.499 MGD divided by the total flow rate of 18.39 MGD). This process was repeated for each of the 12, 2-hour readings taken during the day. The results are provided in Table 10.

(2) Random Error

Only the PLC's accuracy and the pressure transmitter's dead band were identified as being random in nature. The Fischer-Porter transmitters have a dead band of ± 0.01 percent of the span. The uncertainty due to the dead band of the pressure transmitters can be calculated using the methodology shown in *Equation (4)*. The uncertainty in the pressure differential measurement due to dead band would be ± 0.005 inches of water (i.e., ± 0.0001 times 50) for the 36-inch finished water meter. Applying *Equation (4)*, the uncertainty in the flow rate due to the dead band

---

[2] Technically, if there is more than one uncertainty source that is considered to have an "unknown direction that is known to be in the same direction for several meters", the various error sources for a single meter should be combined by the root mean square and then this value should be linearly added to the same resultant of the other meters. However, for this study, it was assumed that all uncertainty sources were in the same unknown direction and thus all uncertainty sources having an "unknown direction that is known to be in the same direction for several meters" were added linearly (i.e. the root mean square was not applied to a single meter's various uncertainty sources having an "unknown direction that is known to be in the same direction for several meters" before linearly adding to the other meter's same type of error.) In this particular analysis, there were not an errors considered "unknown direction that is known to be in the same direction for several meters" so this was not an issue.

of the pressure transmitter would then be ± .218 percent or 0.018 MGD for the 36-inch finished water venturi meter.

The manufacturer states that the PLC's analog-to-digital conversion can take place with an uncertainty of ± 0.05 percent of full-scale. As mentioned earlier, it was assumed that full-scale refers to full-scale of the venturi or magnetic meter. The venturi meter is calibrated to a maximum flow of 25 MGD and the magnetic meter has a capacity of 18 MGD. The absolute random uncertainties due to the PLC would be ± 0.0125 MGD (25 MGD times 0.0005) and ± 0.0090 MGD (18 MGD times 0.0005) for the venturi meter and magnetic meter, respectively. The relative uncertainty estimate for the PLC would be ± 0.136 percent (i.e., ± 0.0125 MGD divided by 9.20 MGD) and ± 0.098 percent (i.e., ± 0.0090 MGD divided by 9.20 MGD) for the venturi meter and magnetic meter, respectively.

The overall absolute random uncertainty can be determined by combining the absolute random uncertainties due to the PLC and the dead band of the pressure transmitter for the two finished water meters using the root-mean-square method. The method results in an overall random uncertainty of ± 0.024 MGD or ± 0.13 percent (i.e., ± 0.024 MGD divided by 18.39 MGD). This process was repeated for each of the 12, 2-hour readings taken during the day. The results are provided in Table 10.

(3) Combining Systematic and Random Errors

The systematic and random errors can be combined using the following methodology:

$$S_b = \sum S_{b_{\substack{direction \\ known}}} \pm \left[\left(\sum S_{b_{\substack{unknown \\ but\ in\ same \\ direction}}} \right)^2 + \sum S^2_{b_{\substack{direction \\ unknown}}} + \sum S_r^2 \right]^{\frac{1}{2}} \qquad \textit{Equation (8)}$$

Where:

S_r = Absolute random uncertainty.

Using *Equation (8)*, the overall uncertainty of the finished water meter's flow measurements made during the 6:00 p.m. reading on September 1 is ± 0.499 MGD, or ± 2.71 percent.

This process is repeated for each of the 12, 2-hour readings taken during the day and the results can be seen in Table 10. The average uncertainty, *CV*, of a 2-hour flow measurement performed on September 1 was ± 0.83 percent. This implies that the 95-percent confidence interval, *CI*, for a 2-hour flow measurement would be ± 1.83 percent (± 0.83 times 2.201). Over the entire study period, the average uncertainty of a 2-hour flow measurement, *CV*, was found to be ± 0.89 percent. The average 95 percent confidence interval of a 2-hour flow measurement, *CI*, would then be equal to ± 1.74 percent (± 0.89 times 1.960). This process was repeated for each of the 12, 2-hour readings taken during the day. The results are provided in Table 10.

Table 10
Systematic, Random, and Overall Uncertainty Estimates for the Finished Water Meter's 2-Hour Flow Measurements Made on September 1, 1999

Hour	Total Flow (MGD)	CV_b (%)	S_b (MGD)	CV_r (%)	S_r (MGD)	Overall *CV* (%)
Midnight	8.71	± 0.50	± 0.044	± 0.10	± 0.009	± 0.51
2:00 a.m.	12.76	± 0.50	± 0.064	± 0.07	± 0.009	± 0.50
4:00 a.m.	14.60	± 0.50	± 0.073	± 0.06	± 0.009	± 0.50
6:00 a.m.	14.82	± 0.50	± 0.074	± 0.06	± 0.009	± 0.50
8:00 a.m.	14.89	± 0.50	± 0.074	± 0.06	± 0.009	± 0.50
10:00 a.m.	14.96	± 0.50	± 0.075	± 0.06	± 0.009	± 0.50
Noon	15.49	± 0.50	± 0.077	± 0.06	± 0.009	± 0.50
2:00 p.m.	15.52	± 0.50	± 0.078	± 0.06	± 0.009	± 0.50
4:00 p.m.	15.61	± 0.50	± 0.078	± 0.06	± 0.009	± 0.50
6:00 p.m.	18.40	± 2.71	± 0.499	± 0.13	± 0.024	± 2.71
8:00 p.m.	20.44	± 2.24	± 0.458	± 0.11	± 0.023	± 2.24
10:00 p.m.	14.99	± 0.50	± 0.075	± 0.06	± 0.009	± 0.50

B. Uncertainty of Daily Volume Measurements for Raw Water Meter

An estimate of the uncertainty of the daily volume pumped through the station can be obtained from the 12, 2-hour flow measurements. The volume pumped through the finished water meters is the average of the 12, 2-hour flow measurements times 1 day. For September 1, the average volume pumped through the station was 15.10 million gallons (MG).

The uncertainty of the systematic daily volume measurements can be determined using the following equation:

$$CV_{Vb} = CV_{bV_{\substack{direction\\known}}} \pm \frac{\Delta t}{m_V}\left(\sum_{i=1}^{n} Q_i^2 CV_{bi_{\substack{direction\\unknown}}}^2 + \left(\sum_{i=1}^{n} Q_i CV_{bi_{\substack{unknown\\but\ in\ same\\direction}}}\right)^2\right)^{\frac{1}{2}} \qquad \textit{Equation (9)}$$

Where:

CV_{Vb}	=	Relative uncertainty of the total bias volume measurement.
$CV_{bV\ direction\ known}$	=	Known direction of the total bias volume measurement.
$CV_{bi\ directionunknown}$	=	Bias error in individual flow measurement *i* where bias direction is unknown.
$CV_{bi\ unknown\ but\ in\ the\ same\ direction}$	=	Bias error in individual flow measurement *i* where bias direction is unknown but in the same direction for all meters.
Δt	=	Time increment.
Q_i	=	Value of flow measurement *i*.
m_v	=	Sum of all *n* volume measurements.

Using *Equation (9)*, the relative systematic error, CV_{vb}, was ± 0.39 percent for September 1.

The average random uncertainty component for the daily volume can be obtained from the following expression:

$$CV_{Vr} = \pm \frac{\Delta t}{m_v}\left(\sum_{i=1}^{n} Q_i^2 CV_{ri}^2\right)^{\frac{1}{2}} \qquad \textit{Equation (10)}$$

Where:

CV_{vr} = Relative random uncertainty of the daily volume measurement.

CV_{ri} = Relative random uncertainty of the ith individual flow measurement.

Using *Equation (10)*, the relative random uncertainty of the daily volume, CV_{vr}, for September 1 is ± 0.02 percent.

The overall uncertainty of the daily volume can then be found by combining the systematic and random uncertainty components in the following manner:

$$CV_V = CV_{bV_{\substack{direction \\ known}}} \pm \frac{\Delta t}{m_V}\left(\sum_{i=1}^{n} Q_i^2 CV^2_{bi_{\substack{direction \\ unknown}}} + \left(\sum_{i=1}^{n} Q_i CV_{bi_{\substack{unknown \\ but\ in\ same \\ direction}}}\right)^2 + \sum_{i=1}^{n} Q_i^2 CV_{ri}^2\right)^{\frac{1}{2}} \qquad \textit{Equation (11)}$$

For the date in question, the overall uncertainty of the daily volume, CV_V, was found to be ± 0.39 percent, or ± 0.059 MG (± 0. 39 percent times 15.10 MG). The 95-percent confidence interval on the daily volume, CI_v, would then be ± 0.86 percent (±0.39 times 2.201). Note that the 95-percent confidence interval for the daily volume (± 0.86 percent) is much narrower than the 95-percent confidence interval for the 2-hour flow measurement (± 1.83 percent) for the flows on September 1. This is because the random errors and systematic errors with unknown direction associated with a 2-hour flow measurement are statistically canceled when they are summed over a day's time. The finished water meter's average random, systematic, and overall uncertainty for each day in each 2-week study period was found using the above method. A summary of the daily volume uncertainties for the September 1999 study period appears in Table 11.

Table 11
Estimated Uncertainties for the Finished Water Meter's Daily Volumes During the September 1, 1999, Study Period

Date	CV_{Vb} (%)	CV_{Vr} (%)	CV_V (%)	CI_V (%)
September 1	± 0.39	± 0.02	± 0.39	± 0.87
September 2	± 0.62	± 0.03	± 0.62	± 1.36
September 3	± 0.68	± 0.03	± 0.68	± 1.49
September 4	± 0.60	± 0.03	± 0.60	± 1.31
September 5	± 0.48	± 0.03	± 0.48	± 1.07
September 6	± 0.64	± 0.03	± 0.64	± 1.40
September 7	± 0.58	± 0.03	± 0.58	± 1.29
September 8	± 0.66	± 0.03	± 0.66	± 1.46
September 9	± 0.42	± 0.02	± 0.42	± 0.92

Table 11
Estimated Uncertainties for the Finished Water Meter's Daily Volumes During the September 1, 1999, Study Period

Date	CV_{Vb} (%)	CV_{Vr} (%)	CV_V (%)	CI_V (%)
September 10	± 0.74	± 0.04	± 0.74	± 1.64
September 11	± 0.60	± 0.03	± 0.60	± 1.32
September 12	± 0.60	± 0.03	± 0.60	± 1.33
September 13	± 0.53	± 0.03	± 0.53	± 1.16
September 14	± 0.49	± 0.03	± 0.49	± 1.08

Over the entire study period, the average systematic uncertainty for a daily volume measurement, CV_b, was determined to be ± 0.32 percent, and the average random uncertainty for a daily volume measurement CV_r was estimated to be ± 0.03 percent. Therefore, the average uncertainty in daily volume would then be ± 0.32 percent, and the average 95-percent confidence interval for the daily volume would be ± 0.63 percent.

C. Daily Uncertainty of the Service Water Components

Two service water lines – the Carbon Tunnel and the South Gallery – are located downstream of the finished water meters and pumped back into the plant. Therefore, the water pumped through these service lines is actually metered twice by the finished water meters. To account for this, the two service water lines are metered.

The Village provided log sheets for the first 2 weeks of September 1999 and February and May of 2000. These log sheets listed the daily volume that passed through each of the service water meters. These daily volumes are also the average daily flow rates since the service water lines, when in use, are in use for the entire day.

The service water component's accuracy, as discussed in Section 2, and specifications are summarized in Table 12.

Table 12
Accuracy and Specifications of
Service Water Components

	Carbon Tunnel Service Water Meter	South Gallery Service Water Meter
Meter type	Sensus Technologies turbo meter	Sensus Technologies turbo meter
Meter capacity	0.58 MGD	1.73 MGD
Meter accuracy	± 1.5 percent of actual flow rate	±1.5 percent of actual flow rate
Installation error	N/A	N/A
Pulse-to-analog conversion accuracy (Act-Paks)	± 2.0 percent of FS flow	± 2.0 percent of FS flow
Calibration accuracy	N/A	N/A
Data totalizer accuracy	N/A*	N/A*

** Data Totalizer Accuracy is included in the Meter Accuracy.*

As shown in Table 12, there are two components that contribute to the overall uncertainty of the service water meters – meter accuracy and pulse-to-analog conversion accuracy. The meter accuracy is already expressed in percent of the actual flow rate of the meter, while the pulse-to-analog conversion accuracy is not. To convert the pulse-to-analog conversion accuracy from percent of FS of flow to percent of flow rate, the following methodology is required:

> The manufacturer states that the pulse-to-analog conversion can take place with an uncertainty of ± 2.00 percent of full-scale. It is assumed that full-scale refers to full-scale of the turbo meter. On the first day of the study period (September 1, 1999), an average daily flow of 0.1970 and 0.0803 MGD were routed through the South Gallery and Carbon Tunnel service meters, respectively. The South Gallery's service water meter has a capacity of 1.73 MGD, and the Carbon Tunnel service water meter has a capacity of 0.58 MGD. The absolute uncertainties due to the pulse-to-analog conversion would be ± 0.0346 MGD (1.73 MGD times 0.02) and ± 0.0116 MGD (0.58 MGD times 0.02) for the South Gallery and Carbon Tunnel service water meters, respectively. The relative uncertainty estimate for the pulse-to-analog conversion would be ± 17.6 percent (i.e., ± 0.0346 MGD divided by 0.1970 MGD) and ± 14.4 percent (i.e.,± 0.012 MGD divided by 0.0803 MGD) for the South Gallery service meter and Carbon Tunnel service meter, respectively.

The meter accuracy is a systematic error with unknown bias direction and pulse-to-analog conversion accuracy is a random error. The absolute uncertainty of service water meters can be determined by using the root-mean-square method to combine the service water meter's uncertainty components. The

overall daily uncertainty of the plant use components for the first 2-weeks in September of 1999 are provided in Table 13.

Table 13
Daily Uncertainties of the Plant Use Meters
for the First 14 days in September of 1999

Date	South Gallery Service Meter Uncertainty		Carbon Tunnel Service Meter Uncertainty		Combined Uncertainty of Both Service Meters	
	MGD	%	MGD	%	MGD	%
September 1	0.0347	17.6	0.0116	14.4	0.0366	13.2
September 2	0.0347	16.5	0.0116	15.0	0.0366	12.8
September 3	0.0348	12.5	0.0115	225.9	0.0367	13.0
September 4	0.0348	13.3	N/A*	N/A*	0.0348	13.3
September 5	0.0348	12.9	N/A*	N/A*	0.0348	12.9
September 6	0.0348	13.1	N/A*	N/A*	0.0348	13.1
September 7	0.0348	12.9	N/A*	N/A*	0.0348	12.9
September 8	0.0348	13.1	N/A*	N/A*	0.0348	13.1
September 9	0.0347	14.7	0.0115	1,440.0	0.0366	15.5
September 10	0.0347	14.7	N/A*	N/A*	0.0347	14.7
September 11	0.0347	15.3	N/A*	N/A*	0.0347	15.3
September 12	0.0347	16.2	N/A*	N/A*	0.0347	16.2
September 13	0.0347	15.2	N/A*	N/A*	0.0347	15.2
September 14	0.0347	17.8	N/A*	N/A*	0.0347	17.8

* *Meter was not in use on this day.*

D. Adjusted Finished Water Uncertainty

Now that an average uncertainty for the finished water meters and the backwash water meters has been determined, an uncertainty for the adjusted raw water can be estimated. The adjusted finished water measurement is simply the difference between the finished water measurement and the service water measurements. Because the finished water measurements and the service water measurements are drastically different, their uncertainty estimates must be combined in such a way that takes this into account. Thus, the uncertainty of the finished and service water measurements must be combined on

the basis of standard deviations and not relative uncertainty (i.e., coefficient of variation). To do this, *Equation Nos. (7)* and *(8)* must be used.

The random, systematic, and overall uncertainty was found for the study period using the average uncertainty values for the finished and service water meters. The average adjusted daily volume pumped for the entire study period was 13.35 MG. The average random uncertainty over this time period was ± 0.036 MG or ± 0.28 percent (i.e., ± 0.036 MG divided by 13.35 MG) while the average systematic uncertainty was ± 0.044 MG or ± 0.33 percent. The average combined uncertainty over this time period was also ± 0.057 MG or ± 0.43 percent in terms of relative uncertainty (CV). This implies that the 95-percent confidence limit, CI, for the adjusted finished water would be ± 0.95 percent (0.46 percent times 2.069). This value is significantly higher than the 95-percent confidence interval of 0.63 percent for the finished water meters only. This suggests that the plant use metering has a significant impact on the overall uncertainty of the adjusted finished water measurements.

E. Uncertainty of Annual Volume Measurements

Since the plant use metering has a significant impact on the overall finished water uncertainty, the adjusted finished water uncertainty will be used to determine the uncertainty in the annual volume pumped through the station. As mentioned earlier, the study period consisted of 2-week periods in September 1999 and February and May 2000. In total, there were 42 days in the study period. Over this time period, the average systematic uncertainty for a daily volume measurement, CV_b, was determined to be ± 0.33 percent (± 0.33 percent from unknown biases and zero percent from unknown biases known to be in the same direction for all meters) and the average random uncertainty for a daily volume measurement, CV_r, was estimated to be ± 0.28 percent. The average uncertainty in daily volume would then be ± 0.43 percent, and the average 95-percent confidence interval for the daily volume would be ± 0.89 percent (±0.43 times 2.069). The uncertainty in the annual volume pumped through the Wilmette Plant, CV_V can be determined as follows:

$$CV_V = CV_{b_{\substack{direction\\known}}} \pm \left(\frac{CV^2_{b_{\substack{direction\\unknown}}}}{n} + CV^2_{b_{\substack{unknown\\but\ in\ same\\direction}}} + \frac{CV_r^2}{n} \right)^{\frac{1}{2}}$$

$$= 0 \pm \left(\frac{0.33^2}{365} + 0^2 + \frac{0.28^2}{365} \right)^{\frac{1}{2}} = \pm 0.02\%$$

Equation (12)

The 95-percent confidence interval of the annual volume, CI_v, would then simply be ± 0.04 percent (± 0.02 times 1.960). The 95-percent confidence interval for the annual volume (± 0.04 percent) is less than the 95-percent confidence interval for the daily volume (± 0.89 percent). Most of the random error and unknown bias errors associated with the daily volume measurement is statistically canceled when determining the uncertainty of the annual volume.

4. Quality Assurance

If the water accounting system is moved to the lakefront, there is concern that if one of the direct diverter's flow measurement systems goes down, that there would be no way to measure the withdrawals from the lake. Thus, it is desirable that the direct diverters have a backup measurement system and, if possible, some other independent check on the measurements to ensure that measurements are reasonable and accurate.

The Wilmette Plant has several backup options for their metering system. Approximately 85 percent of the time only the finished water magnetic meter is in operation. Therefore, if this meter's flow tube or analog- to-digital converter were to fail, diverting flow through the finish water venturi meter would oftentimes be an option. Further, since the raw water is also metered, this data could also be used for recording withdrawals. There is no backup metering system should the service water meters fail.

The Programmable Logic Controllers (PLCs), (Square – D Model 400s), continuously monitor the 4-20 mA signals from the two finished water meters, combine them and send them to the totalizer, which registers every 1,000 gallons. These totals are displayed on the SCADA computer screens from which the operator reads the totals every 2 hours and records them on a daily log sheet. Note that the SCADA only acts as a display and not as a totalizer. Should this recording system fail, the two finished water meters are connected to a Fischer-Porter totalizer, which can be used as a backup recording method. Flow readings for the Service Water Meters are read directly from the meter daily.

Ideally, the finished metering system should be compared to an independent metering system to ensure that the finished water metering system is functioning correctly. In the case of the Wilmette Plant, the finished water metering system can be compared to the raw water metering system. The only difference in flow totals between the two systems should be the service water that is routed twice through the finished water meter and any plant water lost to the system. Normally, the finished and raw water meters should differ by about 1 to 2 percent A difference between the finished and raw water meters that is greater than 2 percent could indicate a malfunctioning within one of the flow measurement systems. It would then be up to the Village to determine what portion of the metering system is causing this larger-than-normal difference.

5. Summary of Inadequacies in the Current Metering Systems

For the most part, the current metering system provided a reasonable level of accuracy and has acceptable quality assurance. The following portion of the metering system appears to be deficient.

- The actual finished water venturi meter is not calibrated. Rather, the Village assumes that the manufacturer's rating curves are correct. Calibration of the venturis would confirm or deny this assumption.

- The overall accuracy in estimating the water supply pumpage is dependent upon many measurement and analysis functions. The documented technical review and much previous work were focused on the accuracy of the pumpage measurements in hardware (i.e., meters, calibrator, pressure transmitter, etc.) and software (PLC, etc.). This analyses does not take into account procedural errors such as inconsistent data in water supply pumpage as a result of the reporting mechanism.

6. Recommendations for Long-Term QA/QC and Improvements to Metering

Recommendations for long-term QA/QC and improvements to metering are as follows:

- Calibration of the finished water venturi meter to determine if the manufacturer's rating curves are valid.

- Occasional inspection and measurement, if physically possible, of the inlet and throat of the finished water venturi meter to determine any possible presence and effects of corrosion and tuberculation on the meter's accuracy.

- Routine auditing of various water withdrawal reports, as part of the long-term QA/QC, as a means of accounting for procedural errors.

7. Conclusions

Some of the important conclusions are summarized below:

- For operational purposes, the City can determine the 2-hour finished water flow measurement reading to within ± 1.74 percent at the Wilmette Plant. This value takes into account the random and systematic uncertainty associated with the venturi and magnetic meters, pressure transmitter, calibration equipment, and recording system.

- On an annual basis, the total volume pumped through the station can be determined to within ± 0.04 percent. The 95-confidence interval for the annual volume is narrower than the 95-percent confidence interval for the 2-hour flow measurements made at the Wilmette Plant because the random and unknown bias errors associated with the measurement are statistically canceled when the measurements are summed over a year's time.

- There is some form of backup system for all the measurements made at the Wilmette Plant. No loss of flow data is likely under most conditions.

- The raw water meters can be used as a check on the finished water flow measurement system. The difference between the raw and finished water values should be less than 2 percent. A difference greater than 2 percent indicates there may be a problem within the flow measurement system.

References

American Society of Mechanical Engineers, *Fluid Meters: Their Theory and Application*. ASME, New York, 6th ed., 1971.

Ametek Power Instruments. Telephone conversation between Laura Morland of Mead & Hunt, Inc. and Larry Thompson of Ametek regarding Ametek/Mansfield and Green Pneumatic Dead Weight Tester.

Danfoss. E-mail correspondence between Nicole Grossen of Mead & Hunt, Inc. and John Masters of Danfoss regarding installation requirements of the Danfoss MAGFLO magnetic meter, June 2001.

Electronic Systems Technology. Telephone conversation between Laura Morland of Mead & Hunt, Inc. and technical support at Electronic Systems Technology regarding the Square-D Model 400.

Fischer-Porter, *Electronic Differential Pressure Transmitter – Series 50DPF100, April 1982.*

Instrumark. Telephone conversation between Laura Morland of Mead & Hunt, Inc. and Bernie Brown at Instrumark regarding Danfoss MAGFLO magnetic meter accuracy, October 1999.

International Organization for Standardization, *Measurements of Fluid Flows by Means of Pressure Differential Devices*, ISO, Switzerland, 1991.

Invensys, *Series "W" Turbo Meters–Technical Specifications*, n.d.

Invensys. Telephone conversation between Nicole Grossen of Mead & Hunt, Inc. and Gene Wineburger of Invesys regarding HPSU 1004-A Act Paks.

Mead & Hunt, Inc., *Technical Review of Lake Michigan Water Withdrawals by the City of Evanston–Draft*, July 2002.

Mead & Hunt, Inc., *Technical Review of Lake Michigan Withdrawals – City of Evanston – draft*, August 2002.

Meriam Instrument, *General Installation, Operation and Maintenance Instructions for Meriam Manometers*, April 1992.

Miller, Richard W., *Flow Measurement Engineering Handbook*, McGraw-Hill, New York, 1996.

Sensus Technologies, Inc. *Installation Recommendations--Sensus W-Series Turbo Meters*, n.d.

Spitzer, David W., *Industrial Flow Measurement*. Instrument Society of America, North Carolina, 1990.

Firsttechtools.com, Specifications for the Fluke 87III. Obtained February 2003.