NOTES

1. THE SOUNDINGS INDICATED HEREON REPRESENT THE MINIMUM DEPTH FOUND IN THE 10 FOOT BY 10 FOOT AREA CENTERED AROUND THE TEXT. MINIMUM DEPTH DATA IS PRODUCED FOR STRIKE/SHOAL REMOVAL OPERATIONS AND NOTICES TO NAVIGATION INTERESTS.
2. ELEVATIONS AND SOUNDING DEPTHS ARE REFERRED TO INTERNATIONAL GREAT LAKES DATUM 1985 (IGLD 85). LOW WATER DATUM ZERO IS 577.5 FEET ABOVE MEAN WATER LEVEL AT POINT RIMOUSKI QUEBEC. WATER LEVEL READINGS ARE FROM AN AUTOMATED GAUGE LOCATED AT CALUMET HARBOR, ILLINOIS. DEPTHS ARE MEASURED USING A RESON SEABAT 8125 MULTIBEAM SONAR.
3. THE INFORMATION DEPICTED ON THIS MAP REPRESENTS THE RESULTS OF SURVEYS MADE ON JUNE 1, 2010 AND CAN ONLY BE CONSIDERED AS INDICATING THE GENERAL CONDITIONS PRESENT AT THE TIME.
4. HORIZONTAL POSITIONING IS DETERMINED USING THE DIFFERENTIAL GLOBAL POSITIONING SYSTEM (DGPS). THE DIFFERENTIAL CORRECTIONS ARE PROVIDED BY U.S. COAST GUARD DIFFERENTIAL BROADCAST STATIONS. SIGNAL STRENGTH IS USED AS THE DETERMINING FACTOR IN DIFFERENTIAL SELECTION. THE DGPS RECEIVER IS MANUFACTURED APPLANIX MARINE POS/MV VER 4.0
5. GRID COORDINATES ARE BASED ON THE INDIANA STATE PLANE COORDINATE SYSTEM, TRANSVERSE MERCATOR PROJECTION, INDIANA WEST ZONE (1302), NORTH AMERICAN DATUM 1927 (NAD27). ALL COORDINATES SHOWN ARE IN U.S.SURVEY FEET.
6. UNLESS OTHERWISE NOTED PROJECT DEPTH IS 29.0' BELOW LOW WATER DATUM.

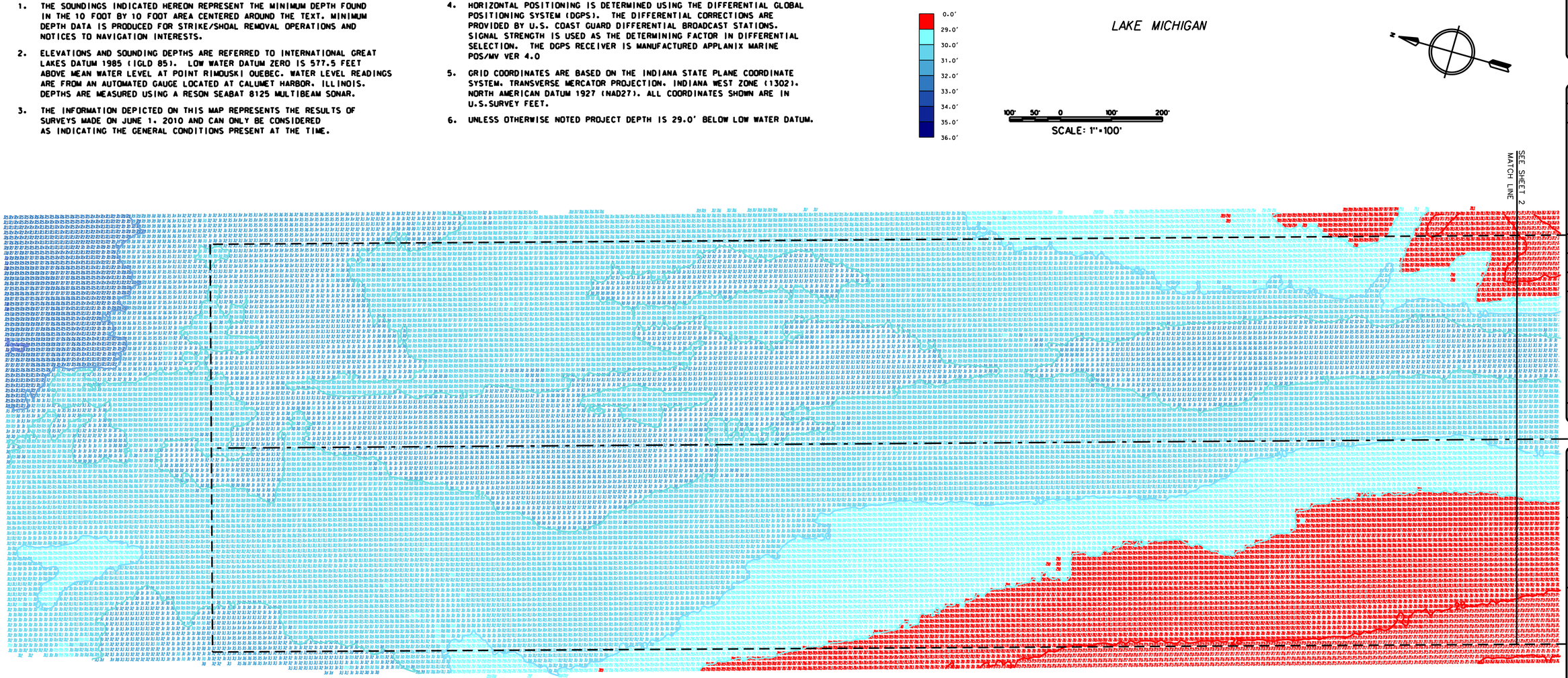

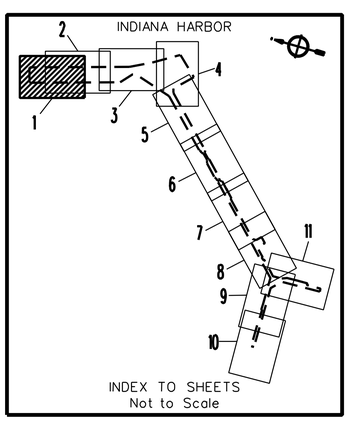

INDEX TO SHEETS
Not to Scale

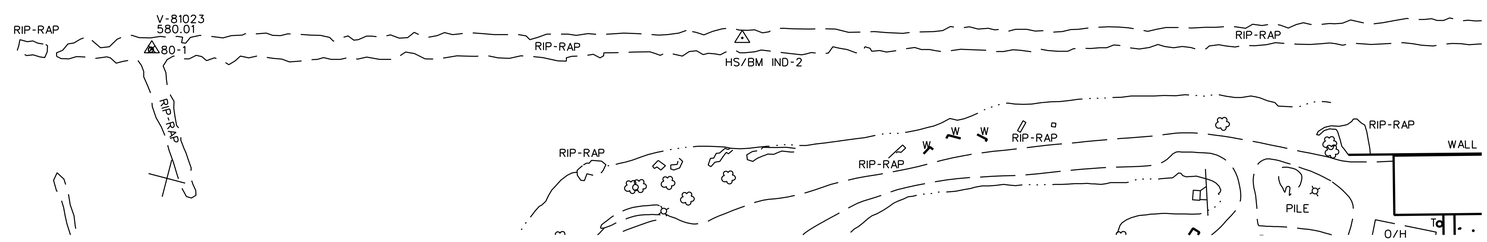

US Army Corps of Engineers
Chicago District

U.S. ARMY ENGINEER DISTRICT
CORPS OF ENGINEERS
CHICAGO, ILLINOIS

Surveyed by: J. McCook
Dwn by: J.S.M.
Ckd by:
Reviewed by:
Chief, Dsc. Mgmt.
Submitted by:
Chief, SAR Section
Survey Date: June 1, 2010
Design file name:
Drawing code:
File name:
Plot date: 8-31-10
Plot scale:
Approval Recommended:
Approved by:
District Engineer
Date
Description
Approv.

CHICAGO DISTRICT
FEDERAL NAVIGATION CHANNEL
INDIANA HARBOR

INDIANA HARBOR
FY-10 CONDITION SURVEY

Sheet reference number:
IND-1
Sheet 01 of 11

NOTES

1. THE SOUNDINGS INDICATED HEREON REPRESENT THE MINIMUM DEPTH FOUND IN THE 10 FOOT BY 10 FOOT AREA CENTERED AROUND THE TEXT. MINIMUM DEPTH DATA IS PRODUCED FOR STRIKE/SHOAL REMOVAL OPERATIONS AND NOTICES TO NAVIGATION INTERESTS.
2. ELEVATIONS AND SOUNDING DEPTHS ARE REFERRED TO INTERNATIONAL GREAT LAKES DATUM 1985 (IGLD 85). LOW WATER DATUM ZERO IS 577.5 FEET ABOVE MEAN WATER LEVEL AT POINT RIMOUSKI QUEBEC. WATER LEVEL READINGS ARE FROM AN AUTOMATED GAUGE LOCATED AT CALUMET HARBOR, ILLINOIS. DEPTHS ARE MEASURED USING A RESON SEABAT 8125 MULTIBEAM SONAR.
3. THE INFORMATION DEPICTED ON THIS MAP REPRESENTS THE RESULTS OF SURVEYS MADE ON JUNE 1, 2010 AND CAN ONLY BE CONSIDERED AS INDICATING THE GENERAL CONDITIONS PRESENT AT THE TIME.
4. HORIZONTAL POSITIONING IS DETERMINED USING THE DIFFERENTIAL GLOBAL POSITIONING SYSTEM (DGPS). THE DIFFERENTIAL CORRECTIONS ARE PROVIDED BY U.S. COAST GUARD DIFFERENTIAL BROADCAST STATIONS. SIGNAL STRENGTH IS USED AS THE DETERMINING FACTOR IN DIFFERENTIAL SELECTION. THE DGPS RECEIVER IS MANUFACTURED APPLANIX MARINE POS/MV VER 4.0
5. GRID COORDINATES ARE BASED ON THE INDIANA STATE PLANE COORDINATE SYSTEM, TRANSVERSE MERCATOR PROJECTION, INDIANA WEST ZONE (1302), NORTH AMERICAN DATUM 1927 (NAD27). ALL COORDINATES SHOWN ARE IN U.S.SURVEY FEET.
6. UNLESS OTHERWISE NOTED PROJECT DEPTH IS 29.0' BELOW LOW WATER DATUM.

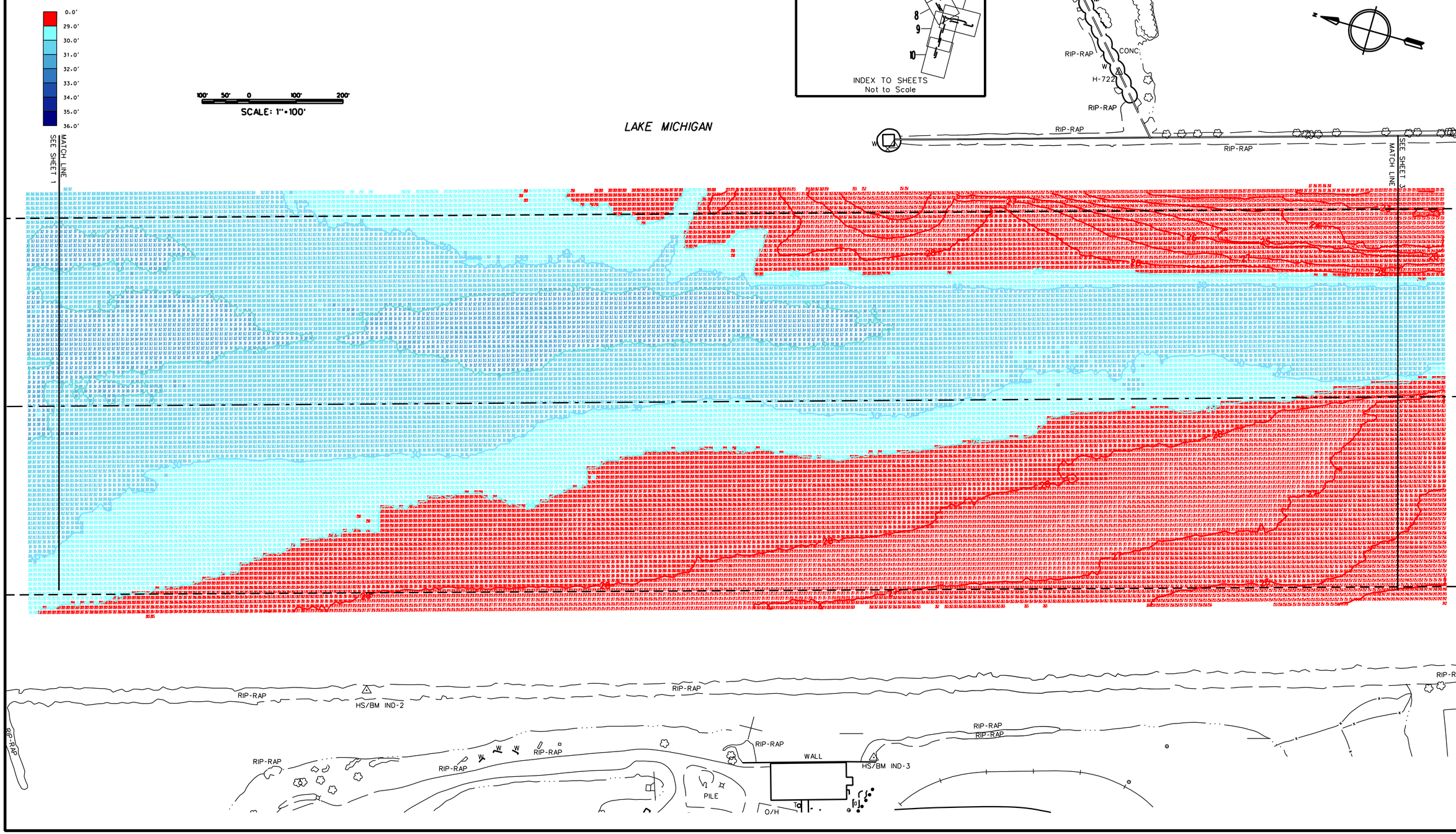

US Army Corps of Engineers
Chicago District

U.S. ARMY ENGINEER DISTRICT
CORPS OF ENGINEERS
CHICAGO, ILLINOIS

Surveyed by: J. Mrozek
Dwn by: J.S.M.
Chkd by:
Reviewed by:
Approved Recommended:
Area Eng. Soo Office
Approved by:
District Engineer:
Survey Date: June 1, 2010
Design file name:
Drawing code:
File name:
Plot date: 8-31-10
Plot scale:
Rev.
Description
Date
Appr.
Symbol
Description
Date
Appr.

CHICAGO DISTRICT
FEDERAL NAVIGATION CHANNEL
INDIANA HARBOR

INDIANA HARBOR
FY-10 CONDITION SURVEY

Sheet reference number:
IND-2
Sheet 02 of 11

NOTES

1. THE SOUNDINGS INDICATED HEREON REPRESENT THE MINIMUM DEPTH FOUND IN THE 10 FOOT BY 10 FOOT AREA CENTERED AROUND THE TEXT. MINIMUM DEPTH DATA IS PRODUCED FOR STRIKE/SHOAL REMOVAL OPERATIONS AND NOTICES TO NAVIGATION INTERESTS.

2. ELEVATIONS AND SOUNDING DEPTHS ARE REFERRED TO INTERNATIONAL GREAT LAKES DATUM 1985 (IGLD 85). LOW WATER DATUM ZERO IS 577.5 FEET ABOVE MEAN WATER LEVEL AT POINT RIMOUSKI QUEBEC. WATER LEVEL READINGS ARE FROM AN AUTOMATED GAUGE LOCATED AT CALUMET HARBOR, ILLINOIS. DEPTHS ARE MEASURED USING A RESON SEABAT 8125 MULTIBEAM SONAR.

3. THE INFORMATION DEPICTED ON THIS MAP REPRESENTS THE RESULTS OF SURVEYS MADE ON JUNE 1, 2010 AND CAN ONLY BE CONSIDERED AS INDICATING THE GENERAL CONDITIONS PRESENT AT THE TIME.

4. HORIZONTAL POSITIONING IS DETERMINED USING THE DIFFERENTIAL GLOBAL POSITIONING SYSTEM (DGPS). THE DIFFERENTIAL CORRECTIONS ARE PROVIDED BY U.S. COAST GUARD DIFFERENTIAL BROADCAST STATIONS. SIGNAL STRENGTH IS USED AS THE DETERMINING FACTOR IN DIFFERENTIAL SELECTION. THE DGPS RECEIVER IS MANUFACTURED APPLANIX MARINE POS/MV VER 4.0

5. GRID COORDINATES ARE BASED ON THE INDIANA STATE PLANE COORDINATE SYSTEM, TRANSVERSE MERCATOR PROJECTION, INDIANA WEST ZONE (1302), NORTH AMERICAN DATUM 1927 (NAD27). ALL COORDINATES SHOWN ARE IN U.S.SURVEY FEET.

6. UNLESS OTHERWISE NOTED PROJECT DEPTH IS 28.0' BELOW LOW WATER DATUM.

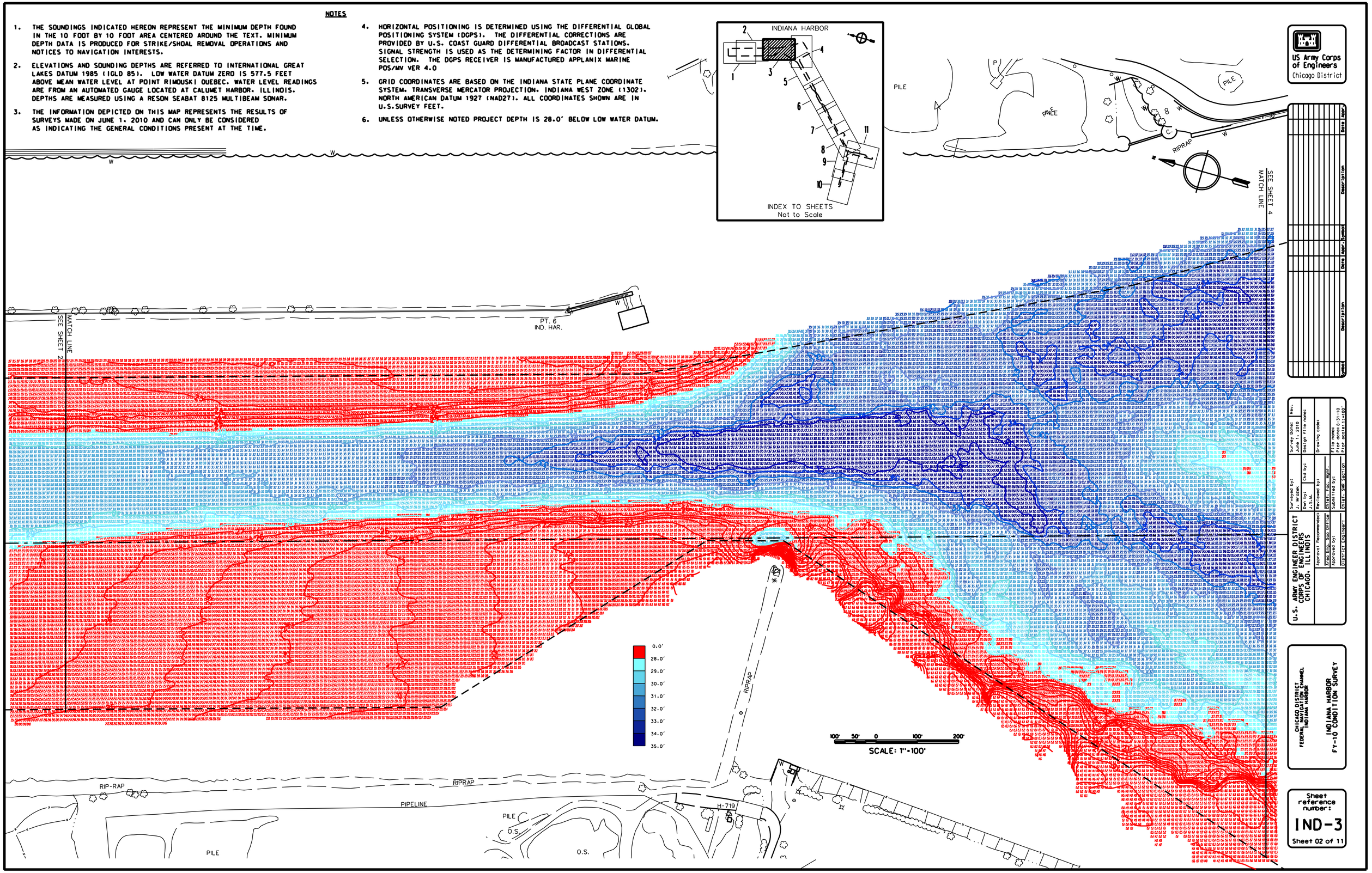

US Army Corps of Engineers
Chicago District

Symbol	Description	Date	Appr.

Symbol	Description	Date	Appr.

U.S. ARMY ENGINEER DISTRICT
CORPS OF ENGINEERS
CHICAGO, ILLINOIS

Surveyed by: J. Mcczek
Dwn by:
Chkd by:
Reviewed by:
Chief, Hydro. Mapping
Chief, Sur. Section
Area Eng. Soo Office
Approved by:
District Engineer
Submitted by:
Survey Date: June 1, 2010
Design file name:
Drawing code:
Rev.
File name: Plot date: 8-31-10
Plot scale: 1:100

CHICAGO DISTRICT
FEDERAL NAVIGATION CHANNEL
INDIANA HARBOR

INDIANA HARBOR
FY-10 CONDITION SURVEY

Sheet reference number:
IND-3
Sheet 02 of 11

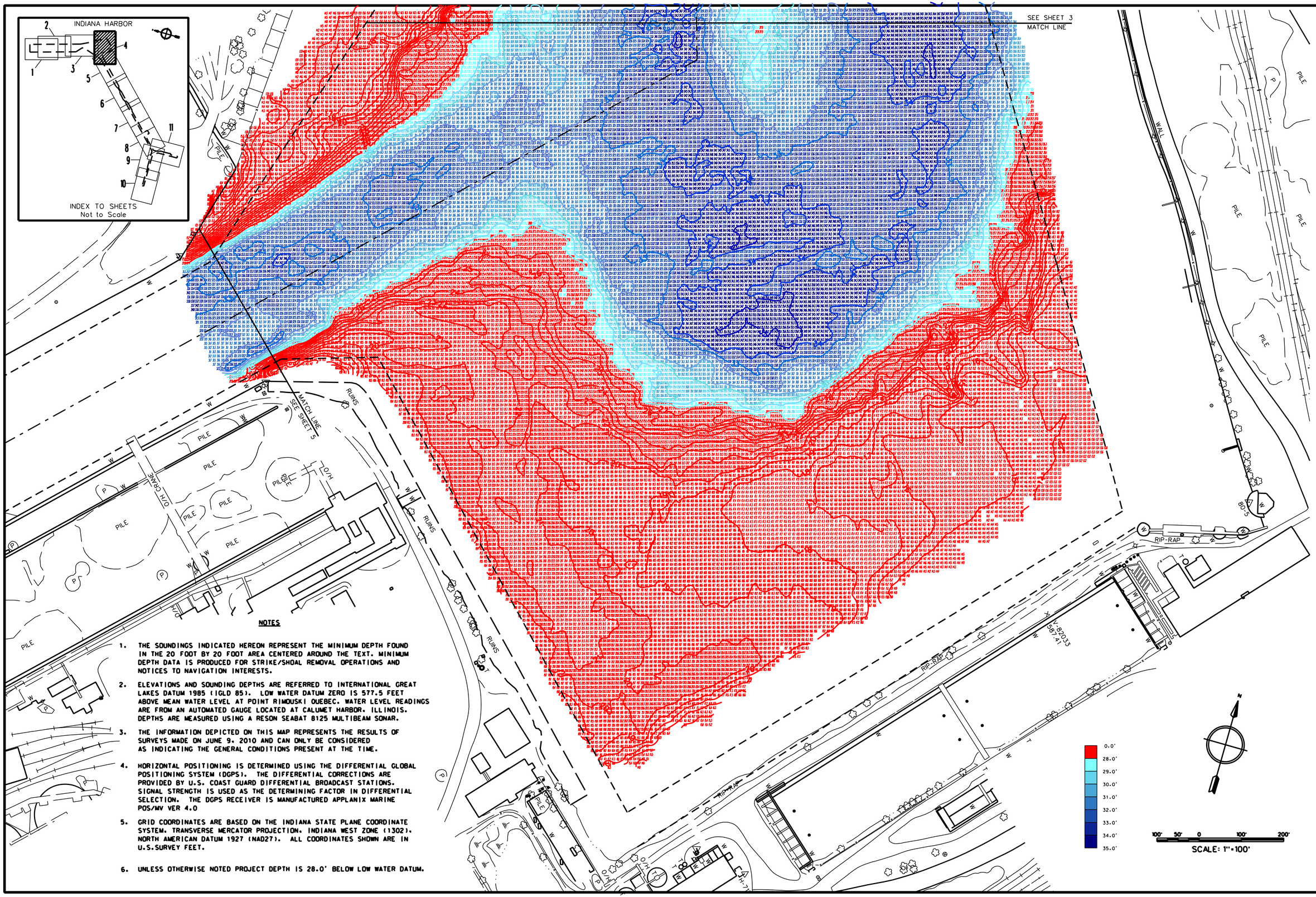

NOTES

1. THE SOUNDINGS INDICATED HEREON REPRESENT THE MINIMUM DEPTH FOUND IN THE 20 FOOT BY 20 FOOT AREA CENTERED AROUND THE TEXT. MINIMUM DEPTH DATA IS PRODUCED FOR STRIKE/SHOAL REMOVAL OPERATIONS AND NOTICES TO NAVIGATION INTERESTS.
2. ELEVATIONS AND SOUNDING DEPTHS ARE REFERRED TO INTERNATIONAL GREAT LAKES DATUM 1985 (IGLD 85). LOW WATER DATUM ZERO IS 577.5 FEET ABOVE MEAN WATER LEVEL AT POINT RIMOUSKI QUEBEC. WATER LEVEL READINGS ARE FROM AN AUTOMATED GAUGE LOCATED AT CALUMET HARBOR, ILLINOIS. DEPTHS ARE MEASURED USING A RESON SEABAT 8125 MULTIBEAM SONAR.
3. THE INFORMATION DEPICTED ON THIS MAP REPRESENTS THE RESULTS OF SURVEYS MADE ON JUNE 9, 2010 AND CAN ONLY BE CONSIDERED AS INDICATING THE GENERAL CONDITIONS PRESENT AT THE TIME.
4. HORIZONTAL POSITIONING IS DETERMINED USING THE DIFFERENTIAL GLOBAL POSITIONING SYSTEM (DGPS). THE DIFFERENTIAL CORRECTIONS ARE PROVIDED BY U.S. COAST GUARD DIFFERENTIAL BROADCAST STATIONS. SIGNAL STRENGTH IS USED AS THE DETERMINING FACTOR IN DIFFERENTIAL SELECTION. THE DGPS RECEIVER IS MANUFACTURED APPLANIX MARINE POS/MV VER 4.0
5. GRID COORDINATES ARE BASED ON THE INDIANA STATE PLANE COORDINATE SYSTEM, TRANSVERSE MERCATOR PROJECTION, INDIANA WEST ZONE (1302), NORTH AMERICAN DATUM 1927 (NAD27). ALL COORDINATES SHOWN ARE IN U.S.SURVEY FEET.
6. UNLESS OTHERWISE NOTED PROJECT DEPTH IS 28.0' BELOW LOW WATER DATUM.

US Army Corps of Engineers
Chicago District

Symbol	Description	Date	Approv.

U.S. ARMY ENGINEER DISTRICT
CORPS OF ENGINEERS
CHICAGO, ILLINOIS

Surveyed by: J. Mrozek
Survey Date: June 9, 2010
Rev.
Drn by: J. Mrozek
Ckd by:
Design file name:
Drawing code:
Reviewed by:
Chief, Tech. Mgmt.
File name:
Plot date: 8-31-10
Plot scale: 1"=100'
Approval Recommended:
Area Eng. Soo Office
Approved by:
District Engineer
Submitted by:
Chief, SAR Section

CHICAGO DISTRICT
FEDERAL NAVIGATION CHANNEL
INDIANA HARBOR

INDIANA HARBOR
FY10 CONDITION SURVEY

Sheet reference number:
IND-4
Sheet 04 of 11

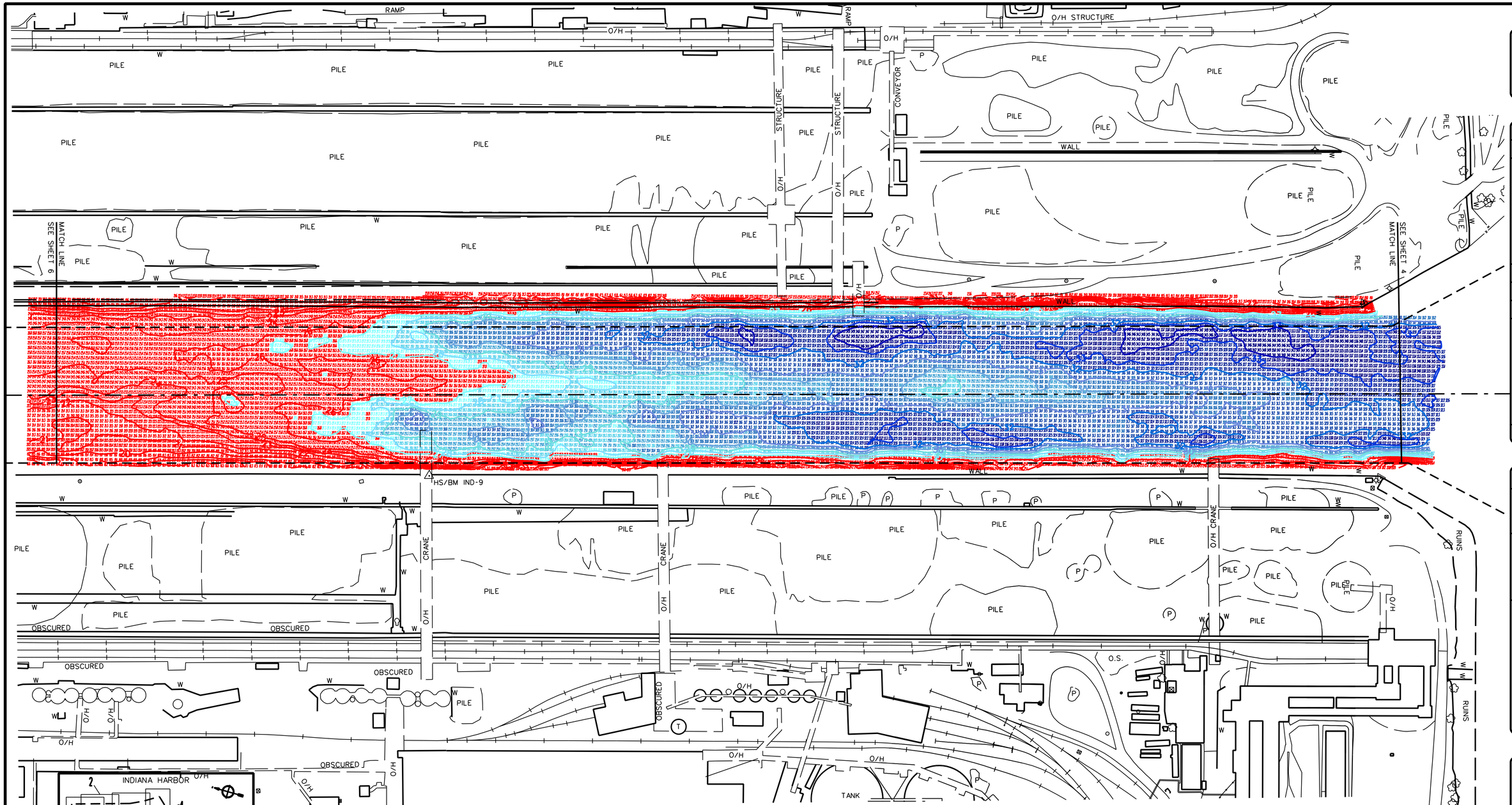

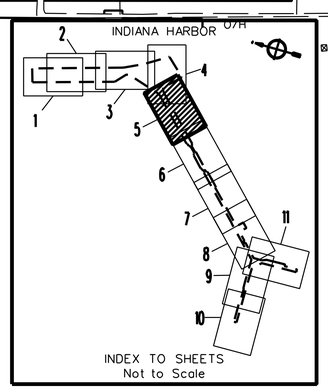

NOTES

1. THE SOUNDINGS INDICATED HEREON REPRESENT THE MINIMUM DEPTH FOUND IN THE 10 FOOT BY 10 FOOT AREA CENTERED AROUND THE TEXT. MINIMUM DEPTH DATA IS PRODUCED FOR STRIKE/SHOAL REMOVAL OPERATIONS AND NOTICES TO NAVIGATION INTERESTS.
2. ELEVATIONS AND SOUNDING DEPTHS ARE REFERRED TO INTERNATIONAL GREAT LAKES DATUM 1985 (IGLD 85). LOW WATER DATUM ZERO IS 577.5 FEET ABOVE MEAN WATER LEVEL AT POINT RIMOUSKI QUEBEC. WATER LEVEL READINGS ARE FROM AN AUTOMATED GAUGE LOCATED AT THE DICKEY RD. BRIDGE. DEPTHS ARE MEASURED USING A RESON SEABAT 8125 MULTIBEAM SONAR.
3. THE INFORMATION DEPICTED ON THIS MAP REPRESENTS THE RESULTS OF SURVEYS MADE ON JULY 26, 2010 AND CAN ONLY BE CONSIDERED AS INDICATING THE GENERAL CONDITIONS PRESENT AT THE TIME.
4. HORIZONTAL POSITIONING IS DETERMINED USING THE DIFFERENTIAL GLOBAL POSITIONING SYSTEM (DGPS). THE DIFFERENTIAL CORRECTIONS ARE PROVIDED BY U.S. COAST GUARD DIFFERENTIAL BROADCAST STATIONS. SIGNAL STRENGTH IS USED AS THE DETERMINING FACTOR IN DIFFERENTIAL SELECTION. THE DGPS RECEIVER IS MANUFACTURED APPLANIX MARINE POS/MV VER 4.0
5. GRID COORDINATES ARE BASED ON THE INDIANA STATE PLANE COORDINATE SYSTEM, TRANSVERSE MERCATOR PROJECTION, INDIANA WEST ZONE (1302), NORTH AMERICAN DATUM 1927 (NAD27). ALL COORDINATES SHOWN ARE IN U.S.SURVEY FEET.
6. UNLESS OTHERWISE NOTED PROJECT DEPTH IS 27.0' BELOW LOW WATER DATUM.

0.0'
27.0'
28.0'
29.0'
30.0'
31.0'
32.0'
33.0'
34.0'

100' 50' 0 100' 200'
SCALE: 1"=100'

US Army Corps of Engineers
Chicago District

Date	Appr.	Symbol	Description	Date	Appr.

U.S. ARMY ENGINEER DISTRICT
CORPS OF ENGINEERS
CHICAGO, ILLINOIS

Surveyed by: J. Mrozek
Dwn by: J.S.M.
Ckd by:
Reviewed by:
Chief, Fac. Mgmt.
Submitted by:
Chief, SMR Section
Approval Recommended:
Area Eng. Soo Office
Approved by:
District Engineer:
Survey Date: July 26, 2010
Design file name:
Drawing code:
File name:
Plot date: 8-31-10
Plot scale: 1"=100'
Rev.

CHICAGO DISTRICT
FEDERAL NAVIGATION CHANNEL
INDIANA HARBOR

INDIANA HARBOR
FY 10 CONDITION SURVEY

Sheet reference number:
IND-5
Sheet 05 of 11

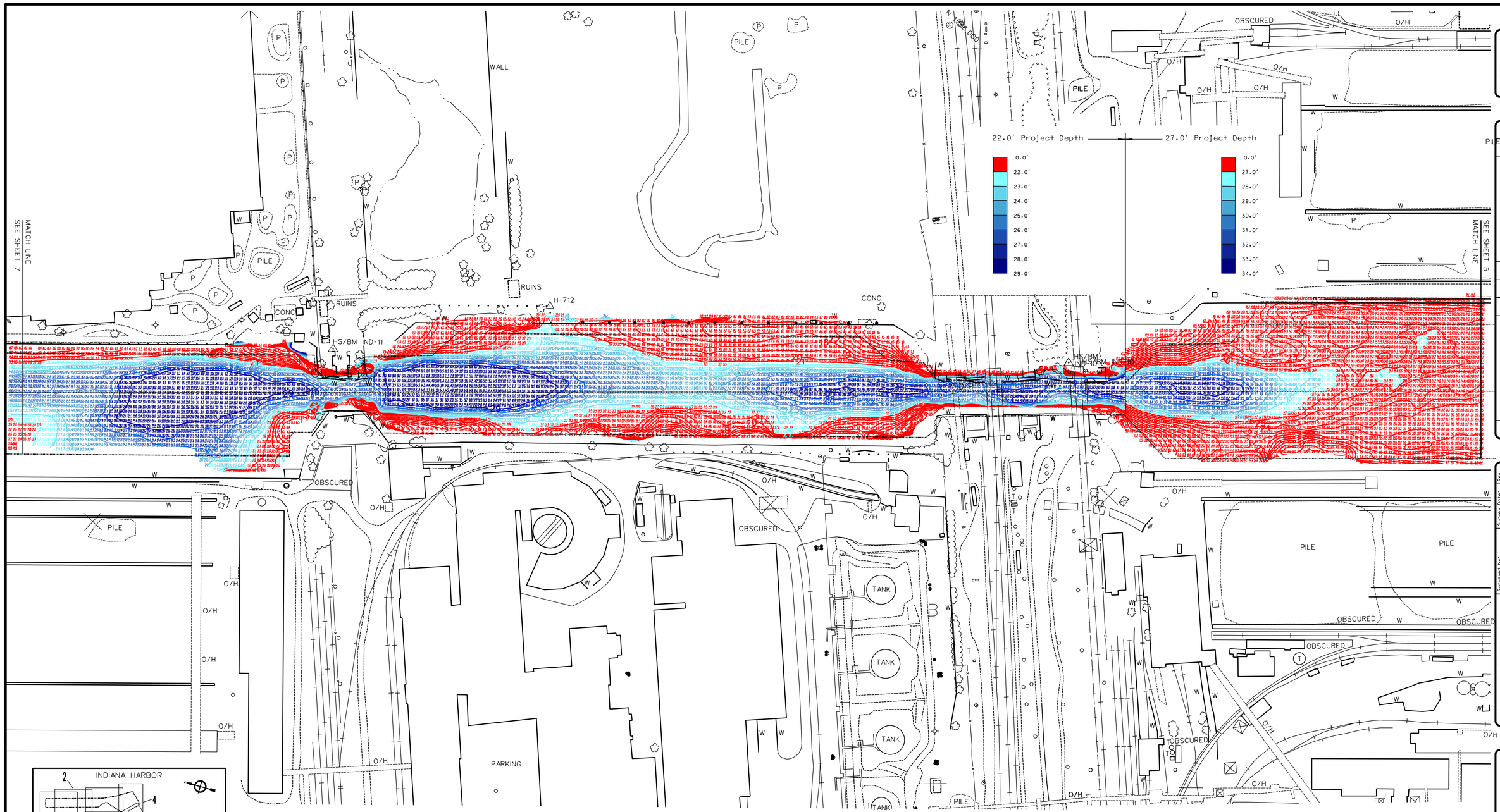

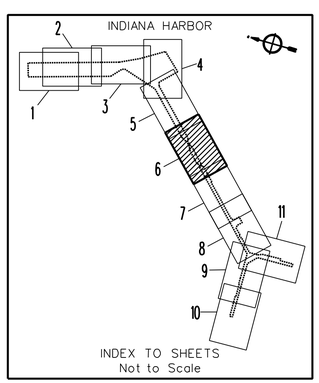

NOTES

1. THE SOUNDINGS INDICATED HEREON REPRESENT THE MINIMUM DEPTH FOUND IN THE 10 FOOT BY 10 FOOT AREA CENTERED AROUND THE TEXT. MINIMUM DEPTH DATA IS PRODUCED FOR STRIKE/SHOAL REMOVAL OPERATIONS AND NOTICES TO NAVIGATION INTERESTS.
2. ELEVATIONS AND SOUNDING DEPTHS ARE REFERRED TO INTERNATIONAL GREAT LAKES DATUM 1985 (IGLD 85). LOW WATER DATUM ZERO IS 577.5 FEET ABOVE MEAN WATER LEVEL AT POINT RIMOUSKI QUEBEC. WATER LEVEL READINGS ARE FROM AN AUTOMATED GAUGE LOCATED AT THE DICKEY RD. BRIDGE. DEPTHS ARE MEASURED USING A RESON SEABAT 8125 MULTIBEAM SONAR.
3. THE INFORMATION DEPICTED ON THIS MAP REPRESENTS THE RESULTS OF SURVEYS MADE ON JULY 26, 2010 AND CAN ONLY BE CONSIDERED AS INDICATING THE GENERAL CONDITIONS PRESENT AT THE TIME.
4. HORIZONTAL POSITIONING IS DETERMINED USING THE DIFFERENTIAL GLOBAL POSITIONING SYSTEM (DGPS). THE DIFFERENTIAL CORRECTIONS ARE PROVIDED BY U.S. COAST GUARD DIFFERENTIAL BROADCAST STATIONS. SIGNAL STRENGTH IS USED AS THE DETERMINING FACTOR IN DIFFERENTIAL SELECTION. THE DGPS RECEIVER IS MANUFACTURED APPLANIX MARINE POS/MV VER 4.0
5. GRID COORDINATES ARE BASED ON THE INDIANA STATE PLANE COORDINATE SYSTEM, TRANSVERSE MERCATOR PROJECTION, INDIANA WEST ZONE (1302), NORTH AMERICAN DATUM 1927 (NAD27). ALL COORDINATES SHOWN ARE IN U.S.SURVEY FEET.
6. UNLESS OTHERWISE NOTED PROJECT DEPTH IS 22.0' BELOW LOW WATER DATUM.

100' 50' 0 100' 200'
SCALE: 1"=100'

US Army Corps of Engineers
Chicago District

Symbol	Description	Date	Appr.

U.S. ARMY ENGINEER DISTRICT
CORPS OF ENGINEERS
CHICAGO, ILLINOIS

Surveyed by: J. Mrozek
Dwn by: J.S.M.
Ckd by:
Reviewed by:
Chief, Fac. Mgmt.
Submitted by:
Chief, SMR Section
Approval Recommended:
Area Eng. Soo Office
Approved by:
District Engineer:
Survey Date: July 26, 2010
Design file name:
Drawing code:
File name:
Plot date: 9-01-10
Plot scale: 1"=100'

CHICAGO DISTRICT
FEDERAL NAVIGATION CHANNEL
INDIANA HARBOR

INDIANA HARBOR CANAL
FY-10 CONDITION SURVEY

Sheet reference number:
IND-6
Sheet 06 of 11

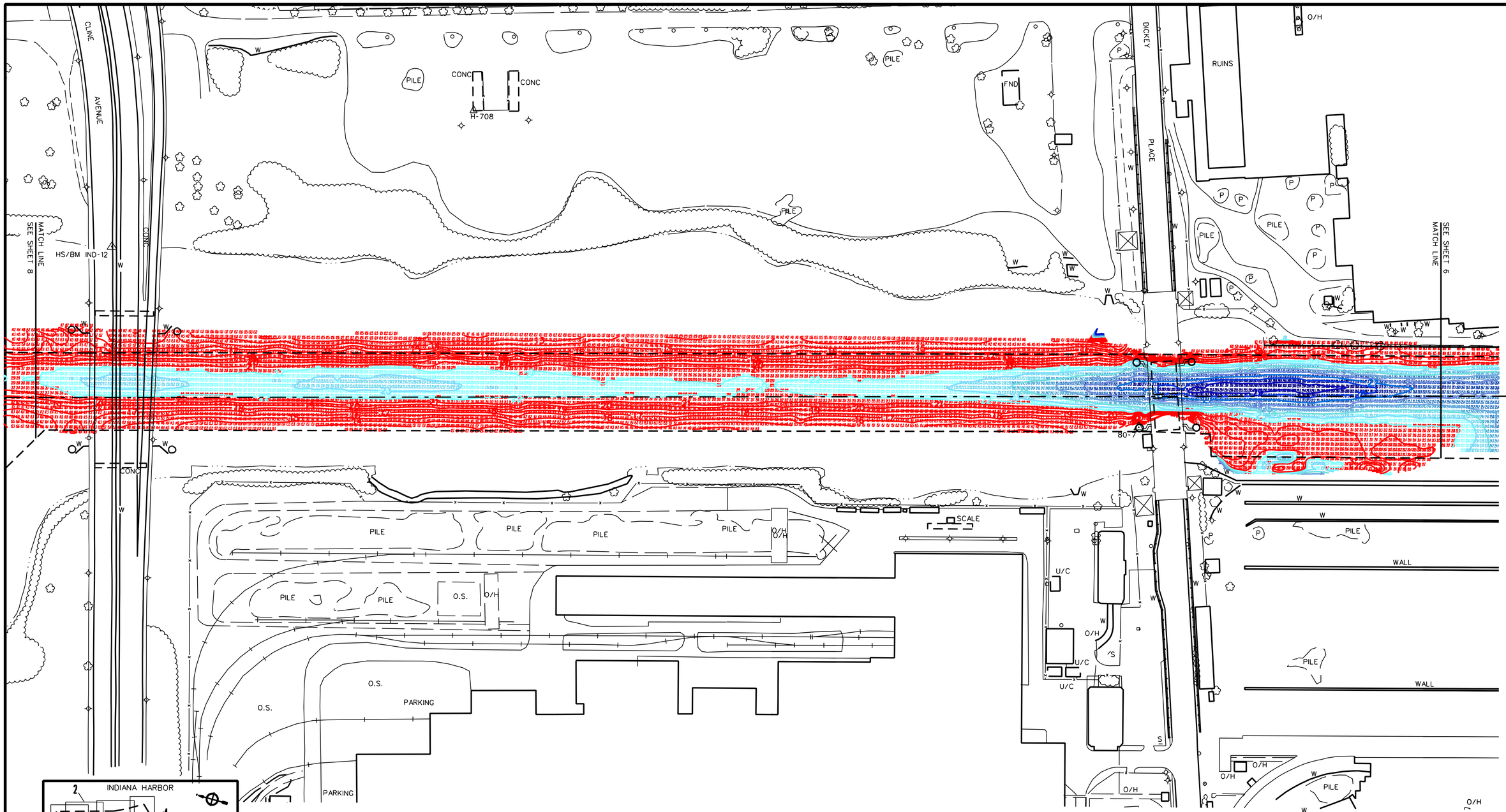

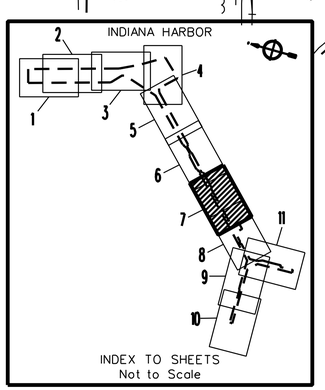

NOTES

1. THE SOUNDINGS INDICATED HEREON REPRESENT THE MINIMUM DEPTH FOUND IN THE 10 FOOT BY 10 FOOT AREA CENTERED AROUND THE TEXT. MINIMUM DEPTH DATA IS PRODUCED FOR STRIKE/SHOAL REMOVAL OPERATIONS AND NOTICES TO NAVIGATION INTERESTS.

2. ELEVATIONS AND SOUNDING DEPTHS ARE REFERRED TO INTERNATIONAL GREAT LAKES DATUM 1985 (IGLD 85). LOW WATER DATUM ZERO IS 577.5 FEET ABOVE MEAN WATER LEVEL AT POINT RIMOUSKI QUEBEC. WATER LEVEL READINGS ARE FROM AN AUTOMATED GAUGE LOCATED AT THE DICKEY RD. BRIDGE. DEPTHS ARE MEASURED USING A RESON SEABAT 8125 MULTIBEAM SONAR.

3. THE INFORMATION DEPICTED ON THIS MAP REPRESENTS THE RESULTS OF SURVEYS MADE ON JULY 26, 2010 AND CAN ONLY BE CONSIDERED AS INDICATING THE GENERAL CONDITIONS PRESENT AT THE TIME.

4. HORIZONTAL POSITIONING IS DETERMINED USING THE DIFFERENTIAL GLOBAL POSITIONING SYSTEM (DGPS). THE DIFFERENTIAL CORRECTIONS ARE PROVIDED BY U.S. COAST GUARD DIFFERENTIAL BROADCAST STATIONS. SIGNAL STRENGTH IS USED AS THE DETERMINING FACTOR IN DIFFERENTIAL SELECTION. THE DGPS RECEIVER IS MANUFACTURED APPLANIX MARINE POS/MV VER 4.0

5. GRID COORDINATES ARE BASED ON THE INDIANA STATE PLANE COORDINATE SYSTEM, TRANSVERSE MERCATOR PROJECTION, INDIANA WEST ZONE (1302), NORTH AMERICAN DATUM 1927 (NAD27). ALL COORDINATES SHOWN ARE IN U.S.SURVEY FEET.

6. UNLESS OTHERWISE NOTED PROJECT DEPTH IS 22.0' BELOW LOW WATER DATUM.

US Army Corps of Engineers
Chicago District

Rev.	Date	Description	Date	Description	Date	Description

Survey Date: July 26, 2010
Design File name:
Drawing code:
Surveyed by: J. Mrozek
Drn by: J.L. Wu
Ckd by:
Reviewed by:
Chief, Eng. Gen.
Submitted by:
Chief, S&R Section
Approved by:
District Engineer
File name:
Plot date: 9-01-10
Plot scale: 1"=100'

U.S. ARMY ENGINEER DISTRICT
CORPS OF ENGINEERS
CHICAGO, ILLINOIS

CHICAGO DISTRICT
FEDERAL NAVIGATION CHANNEL
INDIANA HARBOR

INDIANA HARBOR CANAL
FY-10 CONDITION SURVEY

Sheet reference number:
IND-7
Sheet 07 of 11

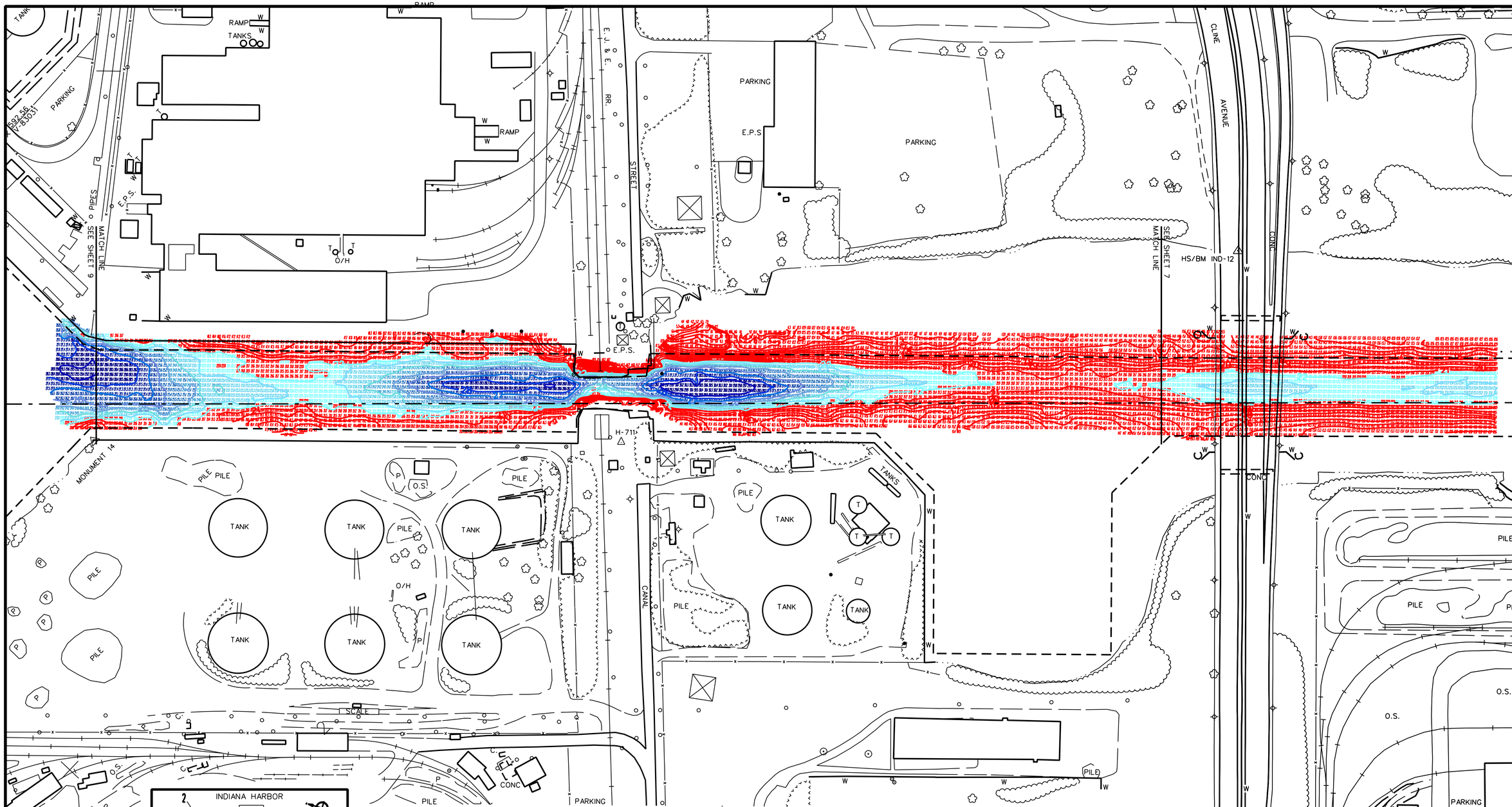

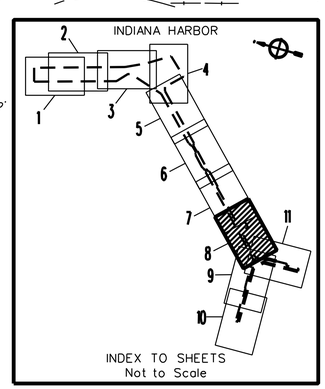

INDEX TO SHEETS
Not to Scale

NOTES

1. THE SOUNDINGS INDICATED HEREON REPRESENT THE MINIMUM DEPTH FOUND IN THE 10 FOOT BY 10 FOOT AREA CENTERED AROUND THE TEXT. MINIMUM DEPTH DATA IS PRODUCED FOR STRIKE/SHOAL REMOVAL OPERATIONS AND NOTICES TO NAVIGATION INTERESTS.
2. ELEVATIONS AND SOUNDING DEPTHS ARE REFERRED TO INTERNATIONAL GREAT LAKES DATUM 1985 (IGLD 85). LOW WATER DATUM ZERO IS 577.5 FEET ABOVE MEAN WATER LEVEL AT POINT RIMOUSKI QUEBEC. WATER LEVEL READINGS ARE FROM AN AUTOMATED GAUGE LOCATED AT THE DICKEY RD. BRIDGE. DEPTHS ARE MEASURED USING A RESON SEABAT 8125 MULTIBEAM SONAR.
3. THE INFORMATION DEPICTED ON THIS MAP REPRESENTS THE RESULTS OF SURVEYS MADE ON JULY 27, 2010 AND CAN ONLY BE CONSIDERED AS INDICATING THE GENERAL CONDITIONS PRESENT AT THE TIME.
4. HORIZONTAL POSITIONING IS DETERMINED USING THE DIFFERENTIAL GLOBAL POSITIONING SYSTEM (DGPS). THE DIFFERENTIAL CORRECTIONS ARE PROVIDED BY U.S. COAST GUARD DIFFERENTIAL BROADCAST STATIONS. SIGNAL STRENGTH IS USED AS THE DETERMINING FACTOR IN DIFFERENTIAL SELECTION. THE DGPS RECEIVER IS MANUFACTURED APPLANIX MARINE POS/MV VER 4.0
5. GRID COORDINATES ARE BASED ON THE INDIANA STATE PLANE COORDINATE SYSTEM, TRANSVERSE MERCATOR PROJECTION, INDIANA WEST ZONE (1302), NORTH AMERICAN DATUM 1927 (NAD27). ALL COORDINATES SHOWN ARE IN U.S.SURVEY FEET.
6. UNLESS OTHERWISE NOTED PROJECT DEPTH IS 22.0' BELOW LOW WATER DATUM.

0.0'
22.0'
23.0'
24.0'
25.0'
26.0'
27.0'
28.0'
29.0'

100' 50' 0 100' 200'
SCALE: 1"=100'

US Army Corps of Engineers
Chicago District

Symbol	Description	Date	Appr.

U.S. ARMY ENGINEER DISTRICT
CORPS OF ENGINEERS
CHICAGO, ILLINOIS

Surveyed by: J. Mrozek
Dwn by: J.S.M.
Ckd by:
Reviewed by:
Chief, Fac. Mgmt.
Submitted by:
Chief, SMR Section
Approval Recommended:
Area Eng. Soo Office
Approved by:
District Engineer:
Survey Date:
Design file name:
Drawing code:
File name:
Plot date: 8-01-10
Plot scale: 1"=100'
Rev.

CHICAGO DISTRICT
FEDERAL NAVIGATION CHANNEL
INDIANA HARBOR

INDIAN HARBOR CANAL
FY-10 CONDITION SURVEY

Sheet reference number:
IND-8
Sheet 08 of 11

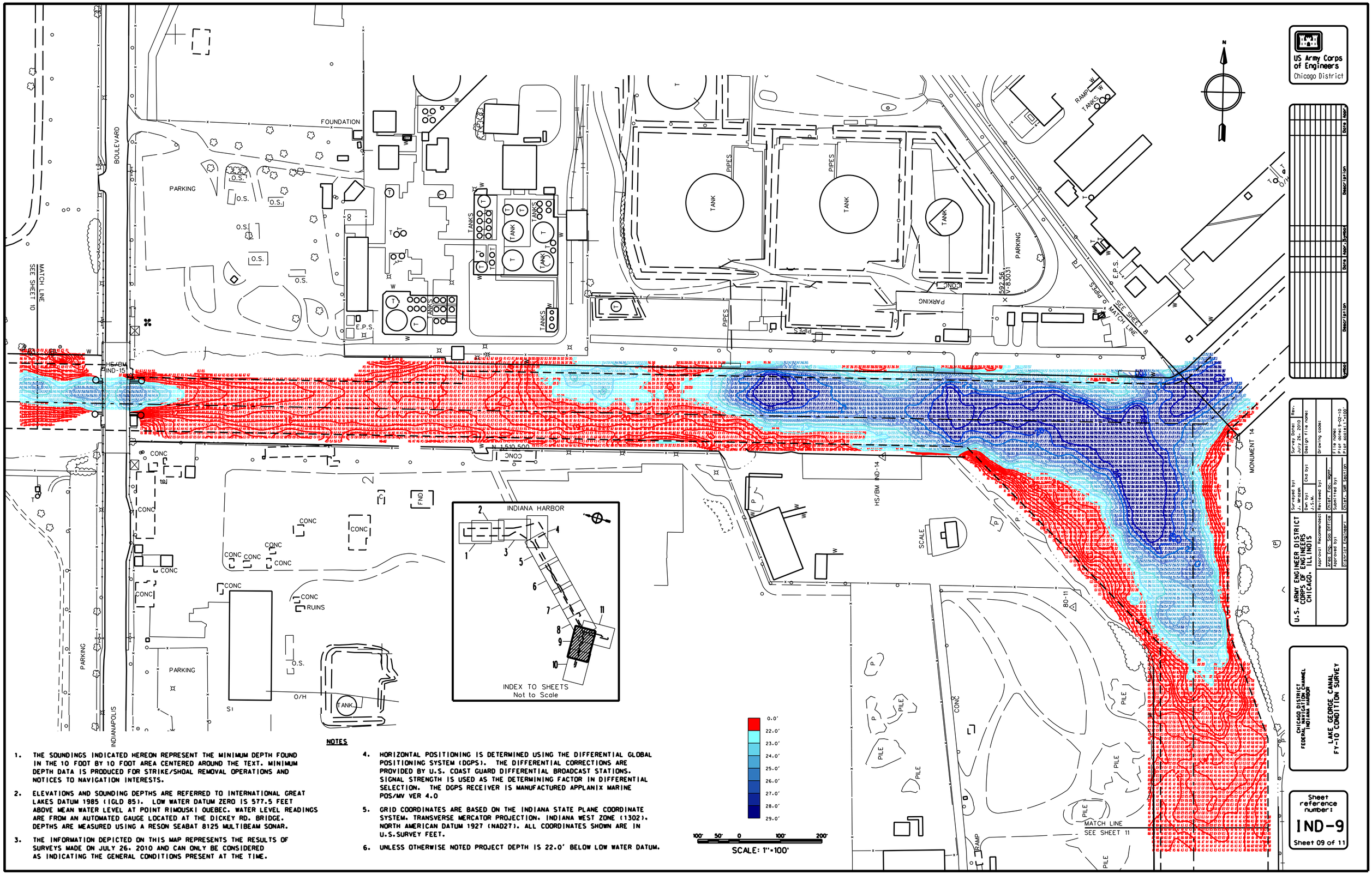

NOTES

1. THE SOUNDINGS INDICATED HEREON REPRESENT THE MINIMUM DEPTH FOUND IN THE 10 FOOT BY 10 FOOT AREA CENTERED AROUND THE TEXT. MINIMUM DEPTH DATA IS PRODUCED FOR STRIKE/SHOAL REMOVAL OPERATIONS AND NOTICES TO NAVIGATION INTERESTS.
2. ELEVATIONS AND SOUNDING DEPTHS ARE REFERRED TO INTERNATIONAL GREAT LAKES DATUM 1985 (IGLD 85). LOW WATER DATUM ZERO IS 577.5 FEET ABOVE MEAN WATER LEVEL AT POINT RIMOUSKI QUEBEC. WATER LEVEL READINGS ARE FROM AN AUTOMATED GAUGE LOCATED AT THE DICKEY RD. BRIDGE. DEPTHS ARE MEASURED USING A RESON SEABAT 8125 MULTIBEAM SONAR.
3. THE INFORMATION DEPICTED ON THIS MAP REPRESENTS THE RESULTS OF SURVEYS MADE ON JULY 26, 2010 AND CAN ONLY BE CONSIDERED AS INDICATING THE GENERAL CONDITIONS PRESENT AT THE TIME.
4. HORIZONTAL POSITIONING IS DETERMINED USING THE DIFFERENTIAL GLOBAL POSITIONING SYSTEM (DGPS). THE DIFFERENTIAL CORRECTIONS ARE PROVIDED BY U.S. COAST GUARD DIFFERENTIAL BROADCAST STATIONS. SIGNAL STRENGTH IS USED AS THE DETERMINING FACTOR IN DIFFERENTIAL SELECTION. THE DGPS RECEIVER IS MANUFACTURED APPLANIX MARINE POS/MV VER 4.0
5. GRID COORDINATES ARE BASED ON THE INDIANA STATE PLANE COORDINATE SYSTEM, TRANSVERSE MERCATOR PROJECTION, INDIANA WEST ZONE (1302), NORTH AMERICAN DATUM 1927 (NAD27). ALL COORDINATES SHOWN ARE IN U.S.SURVEY FEET.
6. UNLESS OTHERWISE NOTED PROJECT DEPTH IS 22.0' BELOW LOW WATER DATUM.

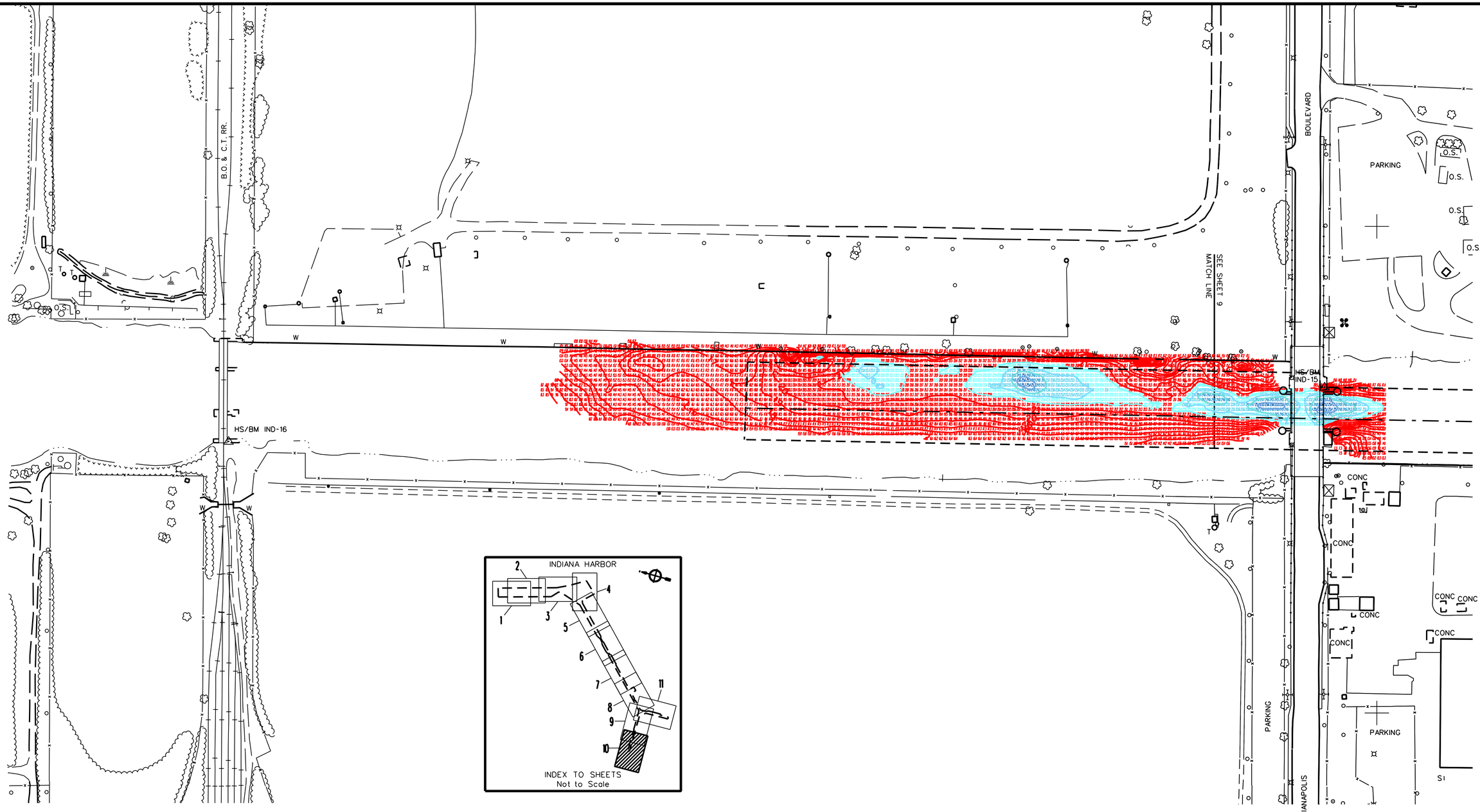

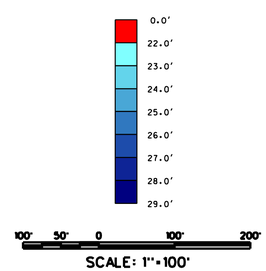

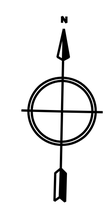

NOTES

1. THE SOUNDINGS INDICATED HEREON REPRESENT THE MINIMUM DEPTH FOUND IN THE 10 FOOT BY 10 FOOT AREA CENTERED AROUND THE TEXT. MINIMUM DEPTH DATA IS PRODUCED FOR STRIKE/SHOAL REMOVAL OPERATIONS AND NOTICES TO NAVIGATION INTERESTS.
2. ELEVATIONS AND SOUNDING DEPTHS ARE REFERRED TO INTERNATIONAL GREAT LAKES DATUM 1985 (IGLD 85). LOW WATER DATUM ZERO IS 577.5 FEET ABOVE MEAN WATER LEVEL AT POINT RIMOUSKI QUEBEC. WATER LEVEL READINGS ARE FROM AN AUTOMATED GAUGE LOCATED AT THE DICKEY RD. BRIDGE. DEPTHS ARE MEASURED USING A RESON SEABAT 8125 MULTIBEAM SONAR.
3. THE INFORMATION DEPICTED ON THIS MAP REPRESENTS THE RESULTS OF SURVEYS MADE ON JULY 26, 2010 AND CAN ONLY BE CONSIDERED AS INDICATING THE GENERAL CONDITIONS PRESENT AT THE TIME.
4. HORIZONTAL POSITIONING IS DETERMINED USING THE DIFFERENTIAL GLOBAL POSITIONING SYSTEM (DGPS). THE DIFFERENTIAL CORRECTIONS ARE PROVIDED BY U.S. COAST GUARD DIFFERENTIAL BROADCAST STATIONS. SIGNAL STRENGTH IS USED AS THE DETERMINING FACTOR IN DIFFERENTIAL SELECTION. THE DGPS RECEIVER IS MANUFACTURED APPLANIX MARINE POS/MV VER 4.0
5. GRID COORDINATES ARE BASED ON THE INDIANA STATE PLANE COORDINATE SYSTEM, TRANSVERSE MERCATOR PROJECTION, INDIANA WEST ZONE (1302), NORTH AMERICAN DATUM 1927 (NAD27). ALL COORDINATES SHOWN ARE IN U.S.SURVEY FEET.
6. UNLESS OTHERWISE NOTED PROJECT DEPTH IS 22.0' BELOW LOW WATER DATUM.

US Army Corps of Engineers
Chicago District

Symbol	Description	Date	Appr.	Symbol	Description	Date	Appr.

U.S. ARMY ENGINEER DISTRICT
CORPS OF ENGINEERS
CHICAGO, ILLINOIS

Surveyed by: J. Mrozek
Dwn by: J.S.M.
Ckd by:
Reviewed by:
Chief, Fac. Mgmt.
Submitted by:
Chief, SMR Section
Approval Recommended:
Area Eng. Sao Office
Approved by:
District Engineer:
Survey Date: July 26, 2010
Design file name:
Drawing code:
File name:
Plot date: 9-02-10
Plot scale: 1"=100'
Rev.

CHICAGO DISTRICT
FEDERAL NAVIGATION CHANNEL
INDIANA HARBOR

LAKE GEORGE CANAL
FY-10 CONDITION SURVEY

Sheet reference number:
IND-10
Sheet 10 of 11

NOTES

1. THE SOUNDINGS INDICATED HEREON REPRESENT THE MINIMUM DEPTH FOUND IN THE 10 FOOT BY 10 FOOT AREA CENTERED AROUND THE TEXT. MINIMUM DEPTH DATA IS PRODUCED FOR STRIKE/SHOAL REMOVAL OPERATIONS AND NOTICES TO NAVIGATION INTERESTS.
2. ELEVATIONS AND SOUNDING DEPTHS ARE REFERRED TO INTERNATIONAL GREAT LAKES DATUM 1985 (IGLD 85). LOW WATER DATUM ZERO IS 577.5 FEET ABOVE MEAN WATER LEVEL AT POINT RIMOUSKI QUEBEC. WATER LEVEL READINGS ARE FROM AN AUTOMATED GAUGE LOCATED AT THE DICKEY RD. BRIDGE. DEPTHS ARE MEASURED USING A RESON SEABAT 8125 MULTIBEAM SONAR.
3. THE INFORMATION DEPICTED ON THIS MAP REPRESENTS THE RESULTS OF SURVEYS MADE ON JULY 27, 2010 AND CAN ONLY BE CONSIDERED AS INDICATING THE GENERAL CONDITIONS PRESENT AT THE TIME.
4. HORIZONTAL POSITIONING IS DETERMINED USING THE DIFFERENTIAL GLOBAL POSITIONING SYSTEM (DGPS). THE DIFFERENTIAL CORRECTIONS ARE PROVIDED BY U.S. COAST GUARD DIFFERENTIAL BROADCAST STATIONS. SIGNAL STRENGTH IS USED AS THE DETERMINING FACTOR IN DIFFERENTIAL SELECTION. THE DGPS RECEIVER IS MANUFACTURED APPLANIX MARINE POS/MV VER 4.0
5. GRID COORDINATES ARE BASED ON THE INDIANA STATE PLANE COORDINATE SYSTEM, TRANSVERSE MERCATOR PROJECTION, INDIANA WEST ZONE (1302), NORTH AMERICAN DATUM 1927 (NAD27). ALL COORDINATES SHOWN ARE IN U.S.SURVEY FEET.
6. UNLESS OTHERWISE NOTED PROJECT DEPTH IS 22.0' BELOW LOW WATER DATUM.

0.0'
22.0'
23.0'
24.0'
25.0'
26.0'
27.0'
28.0'
29.0'

100' 50' 0 100' 200'
SCALE: 1"=100'

US Army Corps of Engineers
Chicago District

Symbol	Description	Date	Appr.
Symbol	Description	Date	Appr.

U.S. ARMY ENGINEER DISTRICT
CORPS OF ENGINEERS
CHICAGO, ILLINOIS

Surveyed by: J. Mrozek
Dwn by: J.S.M.
Ckd by:
Survey Date: July 27, 2010
Rev.
Design file name:
Approval Recommended:
Reviewed by:
Drawing code:
Area Eng. Soo Office
Chief, Fac. Mgmt.
Approved by:
Submitted by:
File name:
Plot date: 9-02-10
Plot scale: 1"=100'
District Engineer:
Chief, SMR Section

CHICAGO DISTRICT
FEDERAL NAVIGATION CHANNEL
INDIANA HARBOR

CALUMET RIVER BRANCH
FY-10 CONDITION SURVEY

Sheet reference number:
IND-11
Sheet 11 of 11