LITTLE CALUMET RIVER, INDIANA

LOCAL FLOOD PROTECTION
STAGE V, PHASE 2 - LEVEE

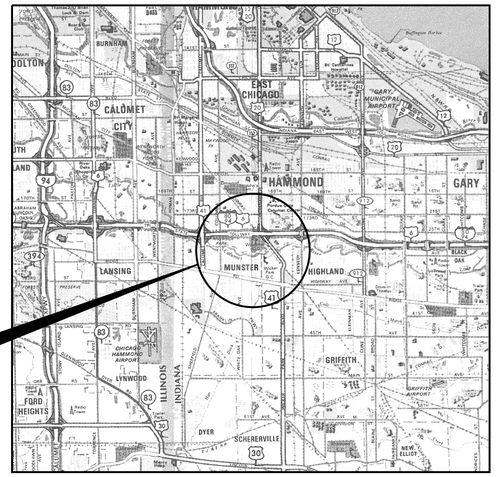

VICINITY MAP

0 2 4 6
SCALE OF MILES

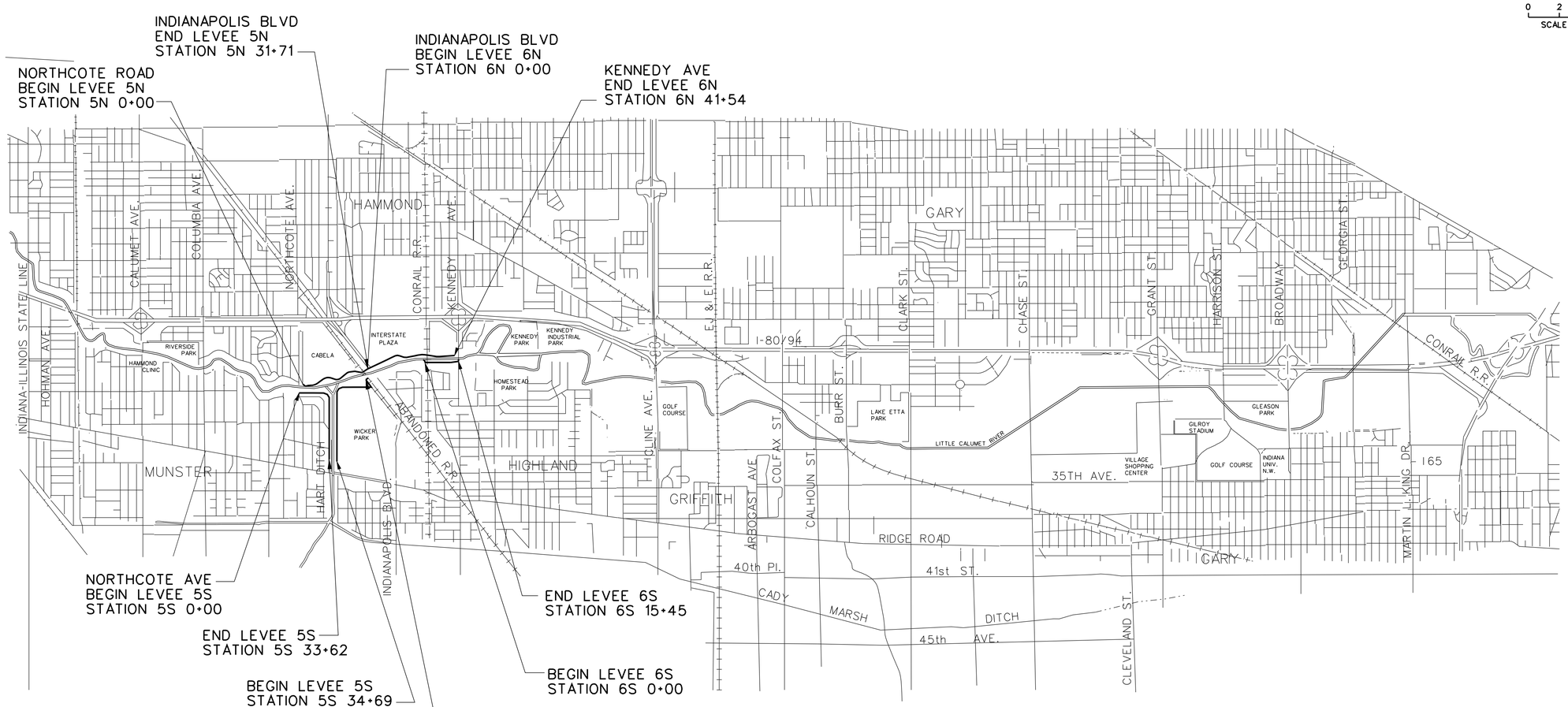

LEGEND

STAGE V PHASE 2 LEVEE

LOCALITY MAP

2000 0 2000 4000 6000
SCALE IN FEET

N

SOLCITATION SET

US Army Corps of Engineers
Chicago District

SYMBOL	DESCRIPTION	DATE	APPROVED

SIGNATURE AFFIXED BELOW INDICATE OFFICIAL RECOMMENDATION AND APPROVAL OF ALL DRAWINGS IN THIS SET AS INDEXED ON THIS SHEET.

Reviewed By: TR Team Leader — Date
Approval Recommended: Project Manager — Date
Approved By: Chief, Design Branch — Date

THIS PROJECT WAS DESIGNED BY U.S. ARMY CORPS OF ENGINEERS, CHICAGO DISTRICT. INDIVIDUALS WHOSE SIGNATURE AND SEAL MAY BE DISCLOSED ON THESE DOCUMENTS ARE OPERATING WITHIN THE SCOPE OF THEIR EMPLOYMENT. SIGNATURES ARE REQUIRED BY ER 1110-1-8151

DATE:	AUG 2007
SCALE:	AS SHOWN
DRAWING CODE:	LCRIFTPOS
	W912P6-07-B-0006

U.S. ARMY ENGINEER DISTRICT
CORPS OF ENGINEERS
CHICAGO, ILLINOIS

LITTLE CALUMET RIVER, INDIANA
LOCAL FLOOD PROTECTION
STAGE V, PHASE 2 - LEVEE

LOCALITY MAP AND VICINITY MAP

SHEET REFERENCE NUMBER:
G-01
SHEET 01 OF 138

PLOT DATE: 8/3/2007
FILENAME: D:\working\dms10534\LCS5G01.DGN

INDEX OF DRAWINGS

SHEET #	REF. NO.	DESCRIPTION
1	G-1	LOCALITY MAP AND VICINITY MAP
2	G-2	INDEX OF DRAWINGS
3	G-3	STANDARD SYMBOLS AND ABBREVIATIONS
4	G-4	GENERAL NOTES AND BORING LOG LEGEND & SYMBOLS
5	C-1	WORK LIMITS AND CONTROL DATA 5S STA. 0+00 TO STA. 19+00
6	C-2	WORK LIMITS AND CONTROL DATA 5S STA. 19+00 TO STA. 34+24
7	C-3	WORK LIMITS AND CONTROL DATA 5S STA. 34+69 TO STA. 60+00
8	C-4	WORK LIMITS AND CONTROL DATA 5S STA. 60+00 TO STA. 75+32
9	C-5	WORK LIMITS AND CONTROL DATA 6S
10	C-6	WORK LIMITS AND CONTROL DATA STA. 5N 00+00 to 5N 11+00
11	C-7	WORK LIMITS AND CONTROL DATA STA 5N 11+00 to 22+00
12	C-8	WORK LIMITS AND CONTROL DATA STA. 5N 22+00 TO 5N 31+71
13	C-9	WORK LIMITS AND CONTROL DATA 6N STA. 6N 0+00 TO STA. 6N 20+00
14	C-10	WORK LIMITS AND CONTROL DATA 6N STA. 6N 20+00 TO STA. 6N 41+54
15	C-11	PLAN AND PROFILE STA. 5S 00+00 TO STA. 5S 11+00
16	C-12	PLAN AND PROFILE STA. 5S 11+00 TO STA. 5S 23+00
17	C-13	PLAN AND PROFILE STA. 5S 23+00 TO STA. 5S 33+62
18	C-14	PLAN AND PROFILE STA. 5S 34+69 TO STA. 5S 48+00
19	C-15	PLAN AND PROFILE STA. 5S 48+00 TO STA. 5S 60+00
20	C-16	PLAN AND PROFILE STA. 5S 60+00 TO STA. 5S 71+00
21	C-17	PLAN AND PROFILE STA. 5S 71+00 TO STA. 5S 75+32
22	C-18	PLAN AND PROFILE STA. 6S 00+00 TO STA. 6S 15+45
23	C-19	PLAN AND PROFILE STA. 5N 00+00 TO STA. 5N 11+00
24	C-20	PLAN AND PROFILE STA. 5N 11+00 TO STA. 5N 21+00
25	C-21	PLAN AND PROFILE STA. 5N 21+00 TO STA. 5N 31+71
26	C-22	PLAN AND PROFILE STA. 6N 00+00 TO STA. 6N 13+00
27	C-23	PLAN AND PROFILE STA. 6N 13+00 TO STA. 6N 24+00
28	C-24	PLAN AND PROFILE STA. 6N 24+00 TO STA. 6N 34+00
29	C-25	PLAN AND PROFILE STA. 6N 34+00 TO STA. 6N 41+54
30	C-26	CROSS SECTION STA. 5S 00+00 TO 5S 11+00
31	C-27	CROSS SECTION STA. 5S 12+00 TO 5S 23+00
32	C-28	CROSS SECTION STA. 5S 24+00 TO 5S 33+66
33	C-29	CROSS SECTION STA. 5S 34+69 TO 5S 45+00
34	C-30	CROSS SECTION STA. 5S 46+69 TO 5S 56+69
35	C-31	CROSS SECTION STA. 5S 58+69 TO 5S 69+69
36	C-32	CROSS SECTION STA. 5S 70+69 TO 5S 74+37
37	C-33	CROSS SECTION STA. 6S 00+00 TO 6S 11+00
38	C-34	CROSS SECTION STA. 6S 12+00 TO 6S 15+06
39	C-35	CROSS SECTION STA. 5N 00+00 TO 5N 11+00
40	C-36	CROSS SECTION STA. 5N 12+00 TO 5N 23+00
41	C-37	CROSS SECTION STA. 5N 24+00 TO 5N 31+79
42	C-38	CROSS SECTION STA. 6N 00+00 TO 6N 11+00
43	C-39	CROSS SECTION STA. 6N 12+00 TO 6N 23+00
44	C-40	CROSS SECTION STA. 6N 24+00 TO 6N 35+00
45	C-41	CROSS SECTION STA. 6N 36+00 TO 6N 41+56
46	C-42	LEVEE, TRENCH, AND DITCH TYPICAL SECTIONS
47	C-43	PRELOAD EMBANKMENTS AND DRAINAGE WICKS
48	C-44	CULVERT 5-8C DETAIL - 24" RCP - 5S
49	C-45	CULVERT 6-3C DETAIL - 24" RCP - 6N
50	C-46	CULVERT 6-5C DETAIL - 24" RCP - 6N
51	C-47	CULVERT 6-7C DETAIL - 24" RCP - 6N
52	C-48	CULVERT 6-8C AND SOUTH KENNEDY AVE. PUMPING STATION OUTFALL DETAILS - 6N
53	C-49	5N TRISTATE GATEWELL PROFILE
54	C-50	CULVERT 5-7C DETAIL - 24" AND 18" RCP -5N
55	C-51	INDIANAPOLIS BLVD DETAIL - 96" RCP - 6N
56	C-52	BARING AVE PUMPING STATION OUTFALL DETAIL - 5S
57	C-53	HAUL ROUTE AND CONSTRUCTION ACCESS
58	C-54	HART DITCH CONTROL STRUCTURE CROSS SECTIONS
59	C-55	HART DITCH CONTROL STRUCTURE TEMPORARY WATER CONTROL STRUCTURE
60	C-56	HART DITCH CONTROL STRUCTURE - SITE PLAN
61	C-57	ACCESS RAMP PROFILE - 5N AND 5S
62	C-58	ACCESS RAMP PROFILE - 6N
63	C-59	ACCESS RAMP PROFILE - 6S AND 5S
64	C-60	PLAN UTILITY CORRIDOR
65	R-00	RECREATIONAL TRAIL ALIGNMENT KENNEDY TO NORTHCOTE
66	R-01	RECREATIONAL AND MAINTENANCE ACCESS PLAN STA. 5N 0+00 TO 5N 11+00
67	R-01A	RECREATION AND MAINTENANCE ACCESS PLAN STA 5S 51+00 TO 5S 34+69
68	R-02	RECREATION AND MAINTENANCE ACCESS PLAN STA 5N 11+00 TO 5N 22+00
69	R-03	RECREATION AND MAINTENANCE ACCESS PLAN STA 5N 22+00 TO 5N 31+79
70	R-04	RECREATION AND MAINTENANCE ACCESS PLAN STA 5N 31+79 TO 6N 13+00
71	R-05	RECREATION AND MAINTENANCE ACCESS PLAN STA 6N 13+00 TO 6N 31+00
72	R-06	RECREATION AND MAINTENANCE ACCESS PLAN STA 6N 31+00 TO KENNEDY
73	R-07	RECREATION TRAIL AND ACCESS RAMP TYPICAL SECTIONS
74	R-08	RECREATION TRAIL SIGNS
75	R-09	VEHICLE BARRIER DETAILS
76	R-10	A-FRAME GATE ELEVATION AND DETAILS
77	S-01	BARING PUMP STATION I-WALL ELEVATIONS
78	S-02	BARING PUMP STATION I-WALL ELEVATIONS SHEET 2
79	S-03	BARING PUMP STATION ELEVATION AND SECTIONS
80	S-04	HART DITCH I-WALL ELEVATIONS
81	S-05	HART DITCH I-WALL ELEVATIONS SHEET 2
82	S-06	HART DITCH I-WALL ELEVATIONS AND SECTIONS
83	S-07	BARING PUMP STATION AND HART DITCH I-WALL PILASTER ELEVATIONS
84	S-08	HART DITCH I-WALL PILASTER ELEVATIONS
85	S-09	BARING PUMP STATION AND HART DITCH I-WALL PILASTER SECTIONS
86	S-10	HART DITCH I-WALL PILASTER SECTIONS
87	S-11	BARING PUMP STATION AND HART DITCH I-WALL PILASTER SECTIONS AND DETAILS
88	S-12	I-WALL SECTIONS AND DETAILS
89	S-13	WICKER PARK PUMP STATION I-WALL ELEVATION AND SECTION
90	S-14	TYPICAL SHEET PILE CORNER AND WALL DETAILS
91	S-15	TYPICAL 24" CULVERT HEADWALL
92	S-16	TRI-STATE 48" GATEWELL PLAN, ELEVATION AND SECTIONS
93	S-17	48" GATEWELL HEADWALLS AND MISCELLENOUS GATEWELL DETAILS
94	S-18	UTILITY COORIDOR SOUTHWEST SIDE ELEVATION AND SECTION
95	S-19	UTILITY COORIDOR SOUTHEAST SIDE ELEVATION AND SECTION
96	S-20	UTILITY COORIDOR SOUTHEAST SIDE ELEVATION AND SECTION SHEET 2
97	S-21	UTILITY COORIDOR SOUTHEAST SIDE SECTIONS AND DETAILS
98	S-22	PIPELINE COVER AND BACKFILL DETAILS
99	S-23	NORTH DRIVE I-WALL ELEVATIONS
100	S-24	NORTH DRIVE I-WALL ELEVATIONS SHEET #2
101	S-25	NORTH DRIVE I-WALL SECTIONS AND DETAILS
102	S-26	NORTH DRIVE I-WALL PILASTER ELEVATIONS
103	S-27	NORTH DRIVE I-WALL PILASTER SECTIONS
104	S-28	NORTH DRIVE I-WALL PILASTER SECTIONS AND DETAILS
105	S-29	KENNEDY AVE OUTLET STRUCTURES ELEVATIONS
106	S-30	KENNEDY AVE DOUBLE 54 INCH GATEWELL PLAN AND SECTIONS
107	S-31	KENNEDY AVE PUMP STATION OUTFALL PLAN AND SECTIONS
108	S-32	NORTHCOTE SANDBAG CLOSURE PLANE, ELEVATION AND SECTIONS
109	S-33	HART DITCH CONTROL STRUCTURE PLAN AND ELEVATION
110	S-34	HART DITCH CONTROL STRUCTURE DETAILS
111	S-35	HART DITCH CONTROL STRUCTURE SECTIONS
112	S-36	UTILITY CORRIDOR NORTHEAST SIDE PLAN AND ELEVATIONS
113	S-37	UTILITY CORRIDOR NORTHEAST SIDE PLAN AND ELEVATIONS SHEET 2
114	S-38	UTILITY CORRIDOR NORTHEAST SIDE EAST ELEVATION AND SECTIONS
115	S-39	UTILITY CORRIDOR NORTHEAST SIDE 24" CLOSURE STRUCTURE
116	S-40	UTILITY CORRIDOR NORTHEAST SECTIONS AND DETAILS
117	S-41	UTILITY CORRIDOR NORTHWEST SIDE PLAN, ELEVATION AND SECTION
118	S-42	INDIANAPOLIS PUMP STATION 96" GATEWELL I-WALL ELEVATION
119	S-43	INDIANAPOLIS PUMP STATION 96" GATEWELL PLAN, ELEVATION, AND SECTION
120	S-44	INDIANAPOLIS PUMP STATION 96" GATEWELL SECTIONS AND DETAILS
121	S-45	24" GATEWELL 6-5C PLAN, ELEVATION, AND SECTIONS
122	S-46	STANDARD CONCRETE AND CONSTRUCTION DETAILS
122A	S-47	STANDARD MISC. METAL DETAILS
123	S-101	RAILROAD SLIDE GATE CLOSURE SITE PLAN
124	S-102	RAILROAD SLIDE GATE CLOSURE NORTH CLOSURE PLAN AND SECTION
125	S-103	RAILROAD SLIDE GATE CLOSURE SOUTH CLOSURE PLAN AND SECTION
126	S-104	RAILROAD SLIDE GATE CLOSURE ABUTMENT PLANS AND SECTIONS
127	S-105	RAILROAD SLIDE GATE CLOSURE SECTIONS AND DETAILS
128	S-106	RAILROAD SLIDE GATE CLOSURE SLIDE GATE PLAN AND ELEVATION
129	S-107	RAILROAD SLIDE GATE CLOSURE SECTIONS AND DETAILS
130	S-108	RAILROAD SLIDE GATE CLOSURE CLOSURE DETAILS
131	S-109	RAILROAD SLIDE GATE CLOSURE ASPHALT RAIL CROSSING
132	S-109A	PEDESTRIAN BRIDGES BRIDGE AND ABUTMENT PLANS
133	S-109B	PEDESTRIAN BRIDGE ELEVATIONS
134	S-110	PEDESTRIAN BRIDGE TYPICAL ABUTMENT DETAILS
135	S-111	PEDESTRIAN BRIDGE PIER ELEVATION AND PLAN
136	S-112	PEDESTRIAN BRIDGE EAST OF KENNEDY AVENUE PIER ELEVATION AND PLAN
137	S-113	PEDESTRIAN BRIDGE WEST OF KENNEDY AVENUE PIER ELEVATION AND PLAN
138	M-01	SLUICE & FLAP GATE DETAILS

US Army Corps of Engineers
Chicago District

SYMBOL	AMENDMENT DESCRIPTION	DATE APPROVED	SYMBOL	DESCRIPTION	DATE APPROVED

DESIGNED BY: JAG | DATE: AUG 2007
DRAWN BY: DB | SCALE: AS SHOWN
CHECKED BY: WK | SOLICITATION NUMBER: W912P6-07-B-0006
SUBMITTED BY: JOHN GROBOSKI | DATE:

U.S. ARMY ENGINEER DISTRICT
CORPS OF ENGINEERS
CHICAGO, ILLINOIS

LITTLE CALUMET RIVER, INDIANA
LOCAL FLOOD PROTECTION
STAGE V, PHASE 2 - LEVEE

INDEX OF DRAWINGS

SHEET REFERENCE NUMBER:
G-02
SHEET 02 OF 138

PLOT DATE: 8/6/2007
FILENAME: D:\working\dms9534\LCS5G02.DGN

STANDARD SYMBOLS

- MONUMENT
- SECTION CORNER
- SOIL BORING
- SPOT ELEVATION
- EXISTING LIGHT POLE
- EXISTING ELECTRIC POLE
- EXISTING POWER POLE
- CONTROL POINT
- TRAFFIC SIGN
- BILLBOARD SIGN
- ESTABLISHED HORIZONTAL & VERTICAL CONTROL STATION
- O/H SIGN — OVERHEAD SIGN
- POINT OF INTERSECTION
- W — EXISTING WATERMAIN
- EXISTING WATERMAIN REDUCER
- EXISTING WATERMAIN VALVE
- G — EXISTING GAS LINE
- PL — ELECTRIC OVERHEAD ELECTRIC, TELEPHONE, SIGNAL AND/OR CABLE TV LINES
- PORTLAND CEMENT CONCRETE
- T — EXISTING UNDERGROUND TELEPHONE
- E — EXISTING UNDERGROUND ELECTRIC
- COMPACTED EMBANKMENT
- SETTLEMENT GAGE
- O — EXISTING OIL LINE
- TREE
- GRID TICK
- DIMENSION DEPENDENT ON SPECIFIC MANUFACTURER'S DIMENSION
- HYDRANT
- SS — SANITARY SEWER
- STS — STORM SEWER
- PEDESTRIAN & BICYCLE CROSSING ADVANCED WARNING SIGN
- TRAIL STOP SIGN
- TRAIL ENTRANCE SIGN
- TRAIL DIRECTION SIGN
- VEHICLE BARRICADE
- TRAIL WARNING SIGN
- ESTABLISHED TEMPORARY BENCH MARK
- CONCRETE
- EXISTING MANHOLE
- SS — EXISTING STORM SEWER
- CS — EXISTING COMBINED SEWER
- SPRINKLER HEAD
- ACCESS ROAD
- WF — WATER FOUNTAIN
- TREELINE
- BRUSHLINE
- EXISTING GUARDRAIL
- PROPOSED GUARDRAIL
- PROPOSED FENCE
- EXISTING FENCE
- SECURITY FENCE
- WORK LIMITS
- EXISTING GROUND
- EXISTING WATERLINE
- CENTERLINE OF LEVEE/I-WALL
- CENTERLINE OF ACCESS ROAD
- CENTERLINE OF RECREATION TRAIL
- SECTION LINE
- CRUSHED AGGREGATE BASE COURSE
- BITUMINOUS CONCRETE PAVEMENT REMOVAL
- RIPRAP
- SWALE
- GATE
- DITCH CENTERLINE
- WATER LEVEL
- A1 — ACCESS ROAD COORDINATE
- C1 — CENTERLINE POINT AT LEVEE/I-WALL
- D1 — DITCH CENTERLINE POINT
- T1 — RECREATION TRAIL CENTERLINE POINT
- W1 — WORK LIMIT POINT
- FUTURE LITTLE CALUMET RIVER CENTERLINE
- 595 — INDEX DEPRESSION
- INTERMEDIATE DEPRESSION
- 595 — INDEX CONTOUR
- INTERMEDIATE CONTOUR
- UTILITY TO BE REMOVED
- R — UTILITY TO BE RELOCATED
- DRAINAGE FILL
- BENCHMARK
- BITUMINOUS CONCRETE PAVEMENT
- STRIPPING
- SANDBAG
- GRID TICK
- NEW FENCE
- FLOODWALL
- RECREATION TRAIL
- SWALE
- T — GOLF TEE
- ST — GOLF SAND TRAP
- G — GOLF GREEN
- P 599 L — SECTION

STANDARD ABBREVIATIONS

*	CENTERLINE
RCP	REINFORCED CONCRETE PIPE
EL.	ELEVATION
B.M.	BENCH MARK
T.B.M.	TEMPORARY BENCH MARK
P.I.	POINT OF INTERSECTION
P.C.	POINT OF CURVATURE
P.C.C.	POINT OF COMPOUND CURVATURE
PT	POINT OF TANGENCY
VPI	POINT OF VERTICAL INTERSECTION
VC	VERTICAL CURVE LENGTH
e	MIDDLE ORDINATE
EW	EACH WAY
CJ	CONSTRUCTION JOINT
DWG	DRAWING
VERT OR V	VERTICAL
HOR OR H	HORIZONTAL
R	RADIUS
TYP.	TYPICAL
MIN.	MINIMUM
B/	BOTTOM
CONC.	CONCRETE
MAX.	MAXIMUM
DIA.	DIAMETER
d_b	DIAMETER OF BAR
O.C.	ON CENTER
☐	SQUARE
STD.	STANDARD
WT.	WEIGHT
REQ'D.	REQUIRED
EXP.	EXPANSION
EST.	ESTIMATE
(E)	EXPANSION JOINT
IN.	INCH
EX	EXISTING
℄	CENTER LINE
UD	UNDERDRAIN
U.S.	UPSTREAM
D.S.	DOWNSTREAM
CMP	CORRUGATED METAL (CULVERT) PIPE
NGVD	NATIONAL GEODETIC VERTICAL DATUM OF 1929
CV	CURVE
FT	FEET
R.R.	RAILROAD
INV.	INVERT
UNO	UNLESS NOTED OTHERWISE
T & B	TOP & BOTTOM
EF	EACH FACE
EA	EACH
SYM ABT	SYMMETRICAL ABOUT
AS	ASPHALT CONCRETE
PCC	PORTLAND CEMENT CONCRETE
LF	LINEAR FEET
N.T.S.	NOT TO SCALE
GALV.	GALVANIZED
CNST.	CONSTRUCTION
ℙ	PLATE
CLR.	CLEAR
PSI	POUNDS PER SQUARE INCH
U.S.G.S.	UNITED STATES GEOLOGICAL SURVEY
RBL	RIVERBANK LEVEE SCHEME
JB	JERSEY BARRIER SCHEME
SPFW	SHEET PILE FLOODWALL SCHEME
EP	EDGE OF PAVEMENT
DIP	DUCTILE IRON PIPE
WL	WATER LEVEL
G	GAS PIPELINE
W	WATER PIPELINE
PL	ELECTRIC POWER LINE
T	TELEPHONE
CIP	CAST IRON PIPE
CTJ	CONTROL JOINT
EXJ	EXPANSION JOINT

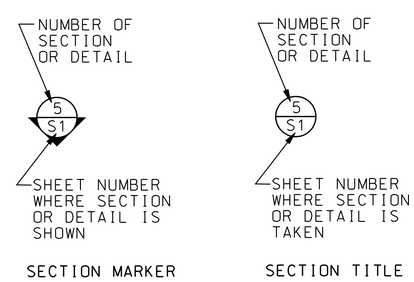

US Army Corps of Engineers
Chicago District

SYMBOL	AMENDMENT DESCRIPTION	DATE APPROVED	SYMBOL	DESCRIPTION	DATE APPROVED

DESIGNED BY: JAG | DATE: AUG 2007
DRAWN BY: DB | SCALE: AS SHOWN
CHECKED BY: WK | SOLICITATION NUMBER: W912P6-07-B-0006
SUBMITTED BY: JOHN GROBOSKI | DATE:

U.S. ARMY ENGINEER DISTRICT
CORPS OF ENGINEERS
CHICAGO, ILLINOIS

LITTLE CALUMET RIVER, INDIANA
LOCAL FLOOD PROTECTION
STAGE V, PHASE 2 - LEVEE

STANDARD SYMBOLS AND ABBREVIATIONS

SHEET REFERENCE NUMBER:
G-03
SHEET 03 OF 138

PLOT DATE: 8/3/2007
FILENAME: D:\working\dms90\3A\LCS5G03.DGN

SOIL BORING LOG LEGEND

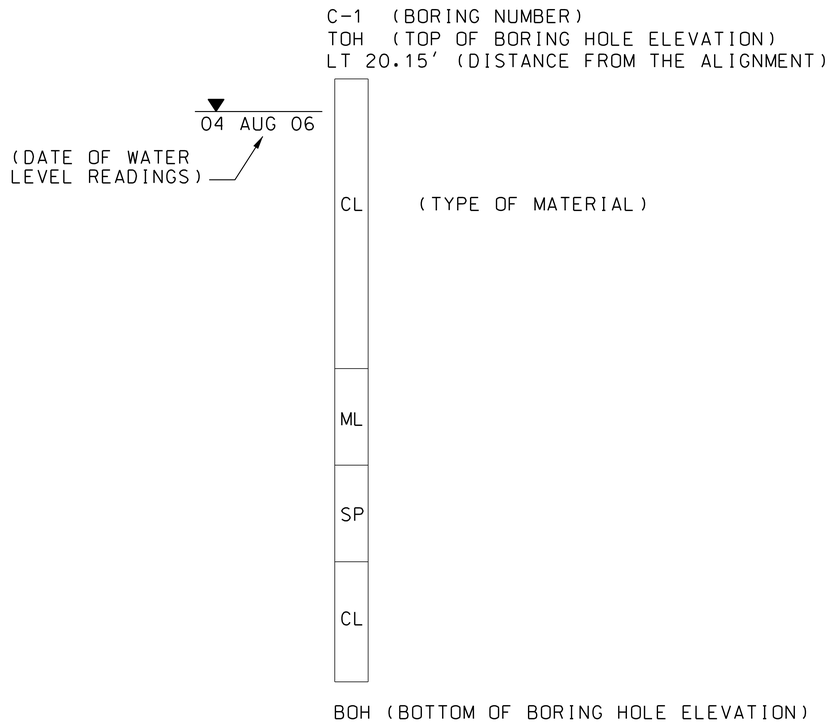

GENERAL BORING NOTES:

1. BORING LOCATIONS ARE SHOWN ON PLAN AND PROFILE SHEETS.
2. REFER TO SPECIFICATIONS SECTION 00 31 32.13 APPENDIX A FOR DETAILED BORING LOGS.

OIL AND NATURAL GAS UTILITY CORRIDOR NOTES:

1. LOCATION OF EXISTING UTILITIES IN THE UTILITY CORRIDOR HAS BEEN OBTAINED FROM SURVEY AND EXISTING RECORD DRAWINGS. CONTRACTOR IS RESPONSIBLE TO LOCATE UTILITIES AND ADJUST CONSTRUCTION OF THE WALL TO MEET FIELD CONDITIONS.
2. CONTRACTOR SHALL CONTROL WATER BY AN ACCEPTABLE MEANS IN THE T-WALL FOOTING EXCAVATION SO AS NOT TO SUBMERGE THE PIPES.
3. EXTREME CAUTION AND ADHERENCE TO THE LATEST OSHA STANDARDS FOR TRENCHING AND CONFINED SPACE ENTRY SHALL BE FOLLOWED.
4. T-WALL HAS BEEN LOCATED FROM TOPOGRAGHIC SURVEY 18' FROM OUTSIDE RAIL. FIELD VERIFY THE STATION OF THE OUTSIDE RAIL AND CONSTRUCT T-WALL OUTSIDE CLEAR ZONE.

GENERAL NOTES:

1. CONTRACTOR MUST PROTECT ALL UTILITIES DURING CONSTRUCTION.
2. THE CONTRACTOR SHALL FIELD VERIFY THE EXACT LOCATIONS AND DEPTHS OF EXISTING UNDERGROUND UTILITIES.
3. UNLESS OTHERWISE NOTED, THE CONTRACTOR SHALL CONTACT UTILITY OWNERS A MINIMUM OF 30 DAYS PRIOR TO BEGINNING WORK IN THESE AREAS.
4. INDOT TEMPORARY EROSION AND SEDIMENT CONTROL GUIDELINES SHALL BE FOLLOWED THROUGHOUT THE WORK LIMITS.
5. THE GRID COORDINATE SYSTEM SHOWN ON THE PLANS IS BASED ON INDIANA STATE PLANE COORDINATE SYSTEM, NORTH AMERICAN DATUM (NAD) OF 1927.
6. ELEVATIONS SHOWN REFER TO THE ELEVATION IN FEET, ABOVE THE NATIONAL GEODETIC VERTICAL DATUM (NGVD) OF 1929.
7. EXISTING FEATURES AND TOPOGRAPHY WERE REPRODUCED FROM AERIAL PHOTOGRAPHY TAKEN IN NOVEMBER 1984.
8. ALL WORK SHALL BE PERFORMED IN ACCORDANCE WITH THE LATEST EDITION OF EM 385-1-1, US ARMY CORPS OF ENGINEERS, SAFETY AND HEALTH REQUIREMENTS MANUAL.
9. ALL STAGING AND STORAGE AREAS SHALL BE RESTORED TO PRE-CONSTRUCTION GRADES AND ELEVATION.
10. DURING CONSTRUCTION OF THE INSPECTION TRENCH, THE CONTRACTOR SHALL IMMEDIATELY NOTIFY THE CONTRACTING OFFICER IN THE EVENT THAT SOIL CONDITIONS ENCOUNTERED ARE SIGNIFICANTLY DIFFERENT FROM THOSE SHOWN IN THE BORING LOGS. OF PARTICULAR CONCERN ARE OPEN WORK GRAVELS, WHETHER OR NOT THEY ARE WATER BEARING, OR OTHER GRANULAR MATERIALS LOCATED IMMEDIATELY BENEATH THE PROPOSED LEVEE FILL. THE CONTRACTOR SHALL NOT PLACE IMPERVIOUS LEVEE FILL IN THESE AREAS WITHOUT THE EXPRESSED APPROVAL OF THE CONTRACTING OFFICER.
11. CONTRACTOR IS RESPONSIBLE FOR OBTAINING THEIR OWN ACCESS TO THE SITE. CONTRACTOR SHALL MAKE ALL NECESSARY ARRANGEMENTS WITH THE RAILROAD COMPANY WHENEVER IT IS NECESSARY FOR ANY PERSONNEL OR CONSTRUCTION EQUIPMENT TO BE ON RAILROAD R.O.W. IN ACCORDANCE WITH SPECIFICATIONS. CONTRACTOR SHALL PROVIDE 6' OF COVER OVER EXISTING PRESSURE UTILITIES WHICH WILL BE CROSSED BY CONSTRUCTION TRAFFIC.
12. THE FOLLOWING TABLE CONTAINS POINT OF CONTACTS (POC) FOR VARIOUS ORGANZIATIONS THAT THE PROJECT WILL IMPACT, AT THE TIME THIS PROJECT WAS DESIGNED.

Name	Firm Name	Office Name	Phone
Emma Wright	BP Pipeline	Universal Ensco Inc	630-836-6416
Dane Graham	BP Pipeline	Engineering	630-836-5813
Marcie Foster	BP Pipeline	ROW Specialist	630-836-3461
Don Samala	Buckeye Partners, L.P.	Relocation	610-904-4000
Troy Kurz	Cabela's	Engineering	308-249-1628
Robert Hardt	Conco-Phillps	Real Estate	636-391-1660
Gary Hanten	ConocoPhillips Pipeline	Engineering Dept	219-397-6666 ext 307
Patrick Nwakoby	Explorer Pipeline	Engineering Dept	918-493-5172
Chuck Jenson	INDOT	Project Engineer	219-787-5046
James Pokrajac	Little Calumet River Basin Comission	LCRBDC	219-763-0696
David Woodsmall	Marathon Pipeline	Engineering	219-477-4001
Steve Woods	Marathon Pipeline	ROW Specialist	219-477-4001
Mark Pasyk	NIPSCO	Utility Highway Affairs	219-647-4299
Neal Arndt	NIPSCO	Gas Transmission Engineer	219-647-4779
Frank Janosi	NIPSCO	Distribution Engineer	219-886-5560
Mark Sawyer	Norfolk Southern Railway	Engineering Dept	404-529-1364
Dennis Simala	North Township (Wicker Park)	Trustee Office	219-932-2530 ext 329
Steven Schory	STV Inc (Buckeye Partners)	Engineering Dept	610-385-8497
Stan Dostatni	Town of Hammond	City Engineer	219-853-6336
Rick Sutton	Town of Hammond	Hammond Sanitary District	219-853-6412 ext 530
John Bach	Town of Highland	Public Works	219-838-1080 ext 336
Jim Mandon	Town of Munster	Town Engineer	219-836-6995
Sheldon Edd	US Army Corps of Engineers	Project Engineer	219-923-1763
Imad Samara	US Army Corps of Engineers	Project Manager	312-846-5560
Fred Hipshear	Wolverine Pipeline Company	Right-of-Way	269-323-2491 ext 24

US Army Corps of Engineers
Chicago District

SYMBOL	AMENDMENT DESCRIPTION	DATE APPROVED	SYMBOL	DESCRIPTION	DATE APPROVED

DESIGNED BY: JAG | DATE: AUG 2007
DRAWN BY: DB | SCALE: AS SHOWN
CHECKED BY: WK | SOLICITATION NUMBER: W912P6-07-B-0006
SUBMITTED BY: JOHN GROBOSKI | DATE:

U.S. ARMY ENGINEER DISTRICT
CORPS OF ENGINEERS
CHICAGO, ILLINOIS

LITTLE CALUMET RIVER, INDIANA
LOCAL FLOOD PROTECTION
STAGE V, PHASE 2 - LEVEE

GENERAL NOTES AND
BORING LOG LEGEND & SYMBOLS

SHEET REFERENCE NUMBER:
G-04
SHEET 04 OF 138

PLOT DATE: 8/3/2007
FILENAME: D:\working\dms10534\LCS5G04.DGN

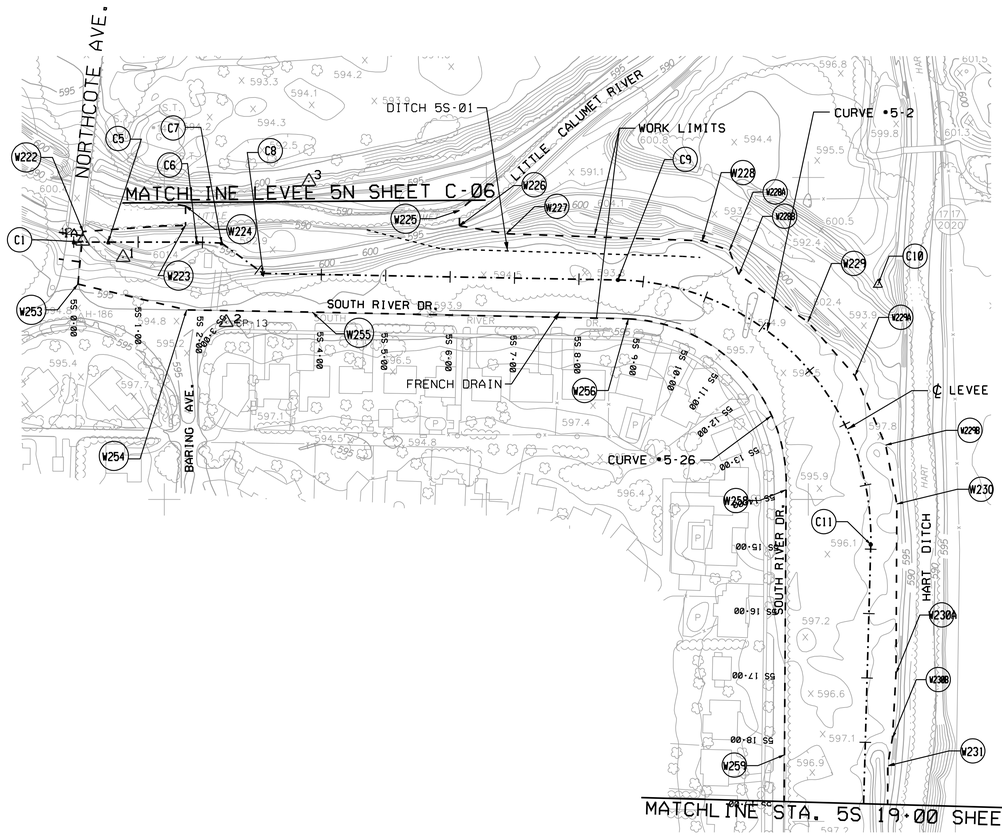

CURVE DATA

LEVEE/I-WALL CENTERLINE

CV #5-2

DELTA	90° 32′ 25.76″ (RT)
TANGENT	3403.79′
LENGTH	632.09′
RADIUS	400.00′

WORK LIMIT

CV #5-26

DELTA	89° 53′ 42.91″ (RT)
TANGENT	255.04
LENGTH	400.88′
RADIUS	255.50′

LEGEND

(C1)	CENTERLINE POINT AT LEVEE/I-WALL
(W1)	WORK LIMIT POINT
-·-·-·-·-	LEVEE/I-WALL CENTERLINE
----------	DITCH CENTERLINE
- - - - - -	WORK LIMIT LINE

SECTION CORNER COORDINATES

SECTION CORNER	NORTHING	EASTING
(17/17 20/20)	1481464.13	391217.28

NOTES:

1. FOR SYMBOLS, ABBREVIATIONS, AND GENERAL NOTES SEE SHEETS G-03 AND G-04.
2. ALL COORDINATES ARE BASED ON INDIANA STATE PLANE COORDINATES ZONE WEST, NAD27.
3. FOR CROSS SECTION SEE SHEETS C-26 AND C-27
4. FOR PLAN AND PROFILE SEE SHEETS C-11 AND C-12
5. FOR DITCH AND FRENCH DRAIN COORDINATES SEE SHEETS C-11 AND C-12.
6. FOR HART DITCH CONTROL STRUCTURE SEE SHEET C-56.
7. FOR BARING AVE. PUMPING STATION OUT FALL SEE SHEET C-52.

100 50 0 100 200
1 INCH = 100 FEET

ESTABLISHED HORIZONTAL & VERTICAL CONTROL STATION

POINT	NORTHING	EASTING	ELEVATION
△1A	1481401.26	389873.08	NOT AVAILABLE
△1	1481375.90	389935.94	NOT AVAILABLE
△2	1481274.84	390096.15	594.79
△3	1481493.89	390224.67	601.81

WORK LIMIT COORDINATES

POINT	NORTHING	EASTING
W222	1481415.93	389873.81
W223	1481425.61	390033.03
W224	1481455.90	390033.03
W225	1481448.81	390458.30
W226	1481425.02	390458.30
W227	1481412.71	390531.05
W228	1481401.65	390835.35
W228A	1481386.64	390877.40
W228B	1481348.96	390892.20
W229	1481275.74	390999.31
W229A	1481191.96	391072.46
W229B	1481084.48	391120.22
W230	1480992.93	391137.47
W230A	1480729.79	391136.17
W230B	1480629.40	391130.71
W231	1480587.64	391123.42
W253	1481334.49	389865.84
W254	1481294.36	390034.63
W255	1481290.93	390229.73
W256	1481280.43	390720.72
W258	1481015.13	390965.55
W259	1480603.42	390962.96

LEVEE/I-WALL CENTERLINE COORDINATES

POINT	DESCRIPTION	NORTHING	EASTING	STATION	OFFSET
C1	BEGIN LEVEE	1481399.68	389874.74	0+00.00	0.00′
C5	P.I.	1481399.66	389912.79	0+38.08	0.00′
C6	P.I.	1481399.72	390050.33	1+76.01	0.00′
C7	P.I.	1481398.20	390088.91	2+14.02	0.00′
C8	P.I.	1481350.93	390153.42	2+91.37	0.00′
C9	CV #5-2 P.C.	1481340.89	390704.44	9+67.56	0.00′
C10	CV #5-2 P.I.	1481333.53	391108.17	11+61.51	0.00′
C11	CV #5-2 P.T.	1480929.90	391097.00	14+73.80	0.00′

US Army Corps of Engineers
Chicago District

SYMBOL	AMENDMENT DESCRIPTION	DATE APPROVED	SYMBOL	DESCRIPTION	DATE APPROVED

DESIGNED BY: JAG
DATE: AUG 2007
DRAWN BY: DB
SCALE: AS SHOWN
CHECKED BY: WK
SOLICITATION NUMBER: W912P6-07-B-0006
SUBMITTED BY: JOHN GROBOSKI
DATE:

U.S. ARMY ENGINEER DISTRICT
CORPS OF ENGINEERS
CHICAGO, ILLINOIS

LITTLE CALUMET RIVER, INDIANA
LOCAL FLOOD PROTECTION
STAGE V, PHASE 2 - LEVEE

WORK LIMITS AND
CONTROL DATA - LEVEE 5S
STA. 0+00 TO STA. 19+00

SHEET REFERENCE NUMBER:
C-01
SHEET 05 OF 138

PLOT DATE: 8/6/2007
FILENAME: D:\working\dms10534\LC55C01.DGN

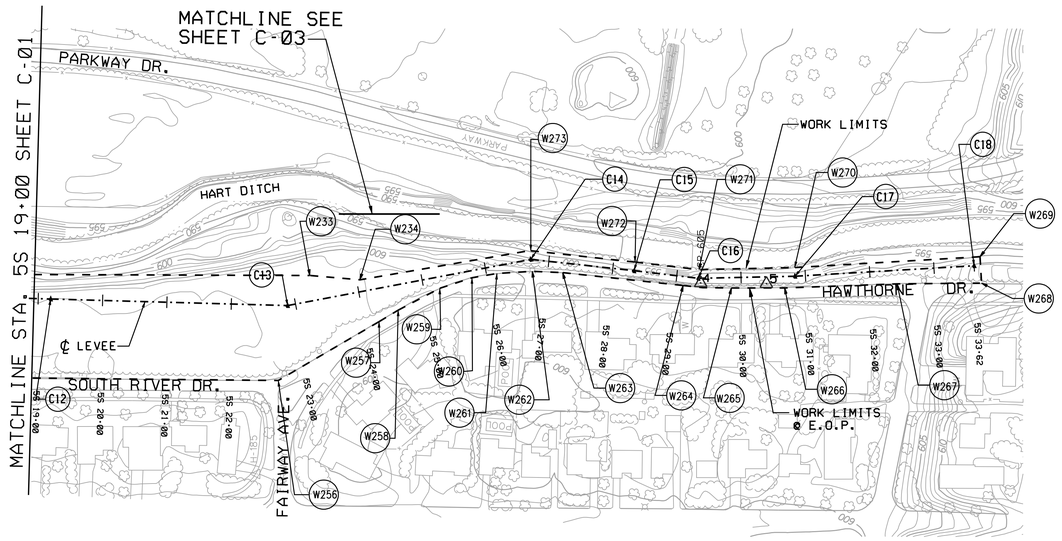

LEGEND

(C1)	CENTERLINE POINT AT LEVEE/I-WALL
(W1)	WORK LIMIT POINT
-·-·-·-·-	LEVEE/I-WALL CENTERLINE
- - - - - -	WORK LIMIT LINE

NOTES:

1. FOR SYMBOLS, ABBREVIATIONS, AND GENERAL NOTES SEE SHEETS G-03 AND G-04.
2. ALL COORDINATES ARE BASED ON INDIANA STATE PLANE COORDINATES ZONE WEST, NAD27.
3. FOR CROSS SECTION SEE SHEETS C-27 AND C-28
4. FOR PLAN AND PROFILE SEE SHEETS C-12 AND C-13

WORK LIMITS COORDINATES

POINT	NORTHING	EASTING
W256	1480150.07	390958.64
W257	1479993.47	391050.06
W258	1479963.80	391067.84
W259	1479899.11	391101.89
W260	1479849.20	391118.24
W261	1479810.40	391124.80
W262	1479755.41	391128.28
W263	1479708.24	391126.21
W264	1479521.30	391106.23
W265	1479446.22	391102.34
W266	1479363.57	391102.41
W267	1479188.88	391108.74
W268	1479057.79	391109.91
W269	1479060.20	391150.95
W270	1479347.66	391134.05
W271	1479495.11	391130.74
W272	1479595.97	391142.55
W273	1479760.56	391160.17
W234	1480022.94	391115.05
W233	1480101.14	391121.72

LEVEE/I-WALL CENTERLINE COORDINATES

POINT	DESCRIPTION	NORTHING	EASTING	STATION	OFFSET
C12	P.I.	1480503.47	391085.21	18+96.02	2.10'
C13	P.I.	1480135.52	391075.03	22+72.01	0.00'
C14	P.I.	1479757.78	391146.68	25+74.03	0.00'
C15	P.I.	1479597.38	391129.13	27+32.27	0.00'
C16	P.I.	1479497.65	391117.38	28+93.57	0.00'
C17	P.I.	1479347.64	391120.54	29+94.95	0.00'
C18	END LEVEE	1479069.41	391136.89	34+23.97	0.00'

ESTABLISHED HORIZONTAL & VERTICAL CONTROL STATION

POINT	NORTHING	EASTING	ELEVATION
△4	1479494.10	391110.01	600.91
△5	1479392.00	391108.90	600.59

100 50 0 100 200
1 INCH = 100 FEET

US Army Corps of Engineers
Chicago District

SYMBOL	AMENDMENT DESCRIPTION	DATE APPROVED	SYMBOL	DESCRIPTION	DATE APPROVED

DESIGNED BY: JAG
DATE: AUG 2007
DRAWN BY: DB
SCALE: AS SHOWN
CHECKED BY: WK
SOLICITATION NUMBER: W912P6-07-B-0006
JOHN GROBOSKI
SUBMITTED BY:
DATE:

U.S. ARMY ENGINEER DISTRICT
CORPS OF ENGINEERS
CHICAGO, ILLINOIS

LITTLE CALUMET RIVER, INDIANA
LOCAL FLOOD PROTECTION
STAGE V, PHASE 2 - LEVEE
WORK LIMITS AND
CONTROL DATA LEVEE 5S
STA. 19+00 TO STA. 34+24

SHEET REFERENCE NUMBER:
C-02
SHEET 06 OF 138

PLOT DATE: 8/3/2007
FILENAME: D:\working\dms10534\LC5SC02.DGN

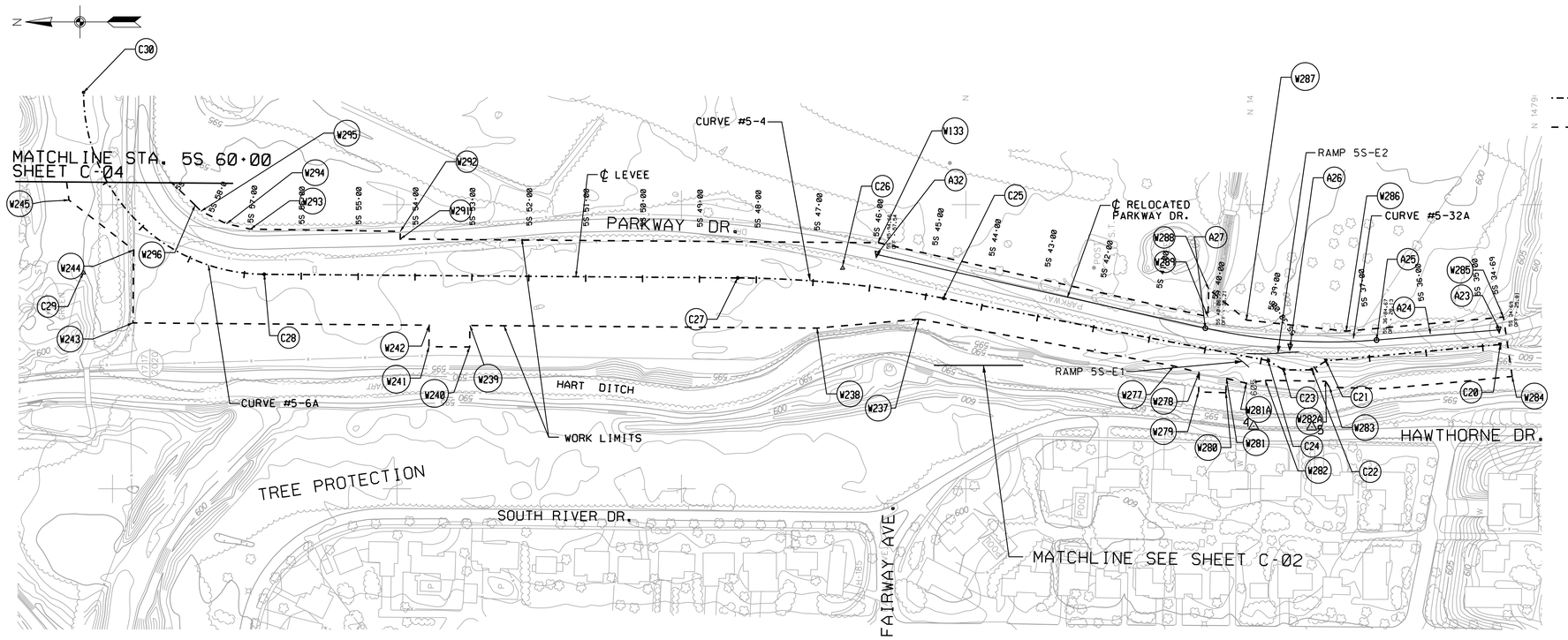

LEGEND

- C1 — CENTERLINE POINT AT LEVEE/I-WALL
- W1 — WORK LIMIT POINT
- LEVEE/I-WALL CENTERLINE
- WORK LIMIT LINE

SECTION CORNER COORDINATES

SECTION CORNER	NORTHING	EASTING
17 17 20 20	1481464.13	391217.28

100 50 0 100 200
1 INCH = 100 FEET

WORK LIMIT COORDINATES

POINT	NORTHING	EASTING
W237	1480082.68	391298.58
W238	1480261.57	391282.72
W239	1480871.83	391287.41
W240	1480872.12	391249.49
W241	1480943.77	391250.04
W242	1480943.48	391287.96
W243	1481464.19	391291.93
W244	1481462.77	391420.19
W245	1481576.55	391507.91
W277	1479634.34	391216.13
W278	1479589.78	391204.41
W279	1479590.69	391170.31
W280	1479542.89	391169.05
W281	1479541.97	391194.19
W281A	1479506.69	391185.77
W282	1479473.82	391190.87
W282A	1479367.83	391189.30
W283	1479360.71	391178.69
W284	1479039.55	391197.77
W285	1479054.86	391302.01
W286	1479331.43	391277.43
W287	1479506.78	391296.85
W288	1479572.93	391351.16
W289	1479574.57	391302.86
W290	1480153.29	391432.91
W291	1480994.27	391439.37
W292	1480994.16	391452.88
W293	1481257.64	391456.92
W294	1481299.58	391466.51
W295	1481344.50	391488.48
W296	1481354.77	391499.06

LEVEE/I-WALL CENTERLINE COORDINATES

POINT	DESCRIPTION	NORTHING	EASTING	STATION	OFFSET
C20	BEGIN LEVEE	1479060.57	391253.84	34+69.36	0.00′
C21	P.I.	1479366.82	391225.28	37+76.50	0.00′
C22	P.I.	1479391.30	391209.30	38+05.73	0.00′
C23	P.I.	1479441.31	391209.19	38+55.74	0.00′
C24	P.I.	1479468.64	391225.63	38+87.63	0.00′
C25	CV #5-4 P.C.	1480039.03	391335.23	44+68.46	0.00′
C26	CV #5-4 P.I.	1480216.46	391388.34	46+50.87	4.70′
C27	CV #5-4 P.T.	1480401.04	391371.10	48+32.73	0.00′
C28	CV #5-6A P.C.	1481233.38	391377.49	56+65.11	0.00′
C29	CV #5-6A P.I.	1481550.90	391379.93	59+15.20	130.80′
C30	CV #5-6A P.T.	1481550.92	391697.48	61+65.31	0.00′

RELOCATED PARKWAY DRIVE CENTERLINE COORDINATES

POINT	DESCRIPTION	NORTHING	EASTING
A23	P.I.	1479061.82	391279.86
A24	P.I.	1479183.41	391272.40
A25	CV #5-32A P.C.	1479278.00	391261.82
A26	CV #5-32A P.I.	1479430.09	391249.28
A27	CV #5-32A P.T.	1479578.99	391282.68
A32	P.I.	1480156.36	391412.19

CURVE DATA

LEVEE/I-WALL

CV #5-4

Delta= 10°26′10.39″ (RT)
T= 182.65′
L= 364.29′
R= 2000.00′

CV #5-6A

Delta= 89°33′34.78″ (LT)
T= 317.55′
L= 500.20′
R= 320.00′

CV #5-32A

DELTA	10° 15′ 05.63″ (RT)
TANGENT	44.85
LENGTH	89.46
RADIUS	500.00

ESTABLISHED HORIZONTAL & VERTICAL CONTROL STATION

POINT	NORTHING	EASTING	ELEVATION
△4	1479494.10	391110.01	600.91
△5	1479392.00	391108.90	600.59

NOTES:

1. FOR SYMBOLS, ABBREVIATIONS, AND GENERAL NOTES SEE SHEETS G-03 AND G-04.
2. ALL COORDINATES ARE BASED ON INDIANA STATE PLANE COORDINATES ZONE WEST, NAD27.
3. FOR CROSS SECTION SEE SHEETS C-29, C-30, AND C-31.
4. FOR PLAN AND PROFILE SEE SHEETS C-14 AND C-15.
5. FOR ACCESS RAMP COORDINATES SEE SHEET C-57.
6. FOR CULVERT COORDINATES SEE SHEET C-44.

US Army Corps of Engineers
Chicago District

SYMBOL	AMENDMENT DESCRIPTION	DATE APPROVED	SYMBOL	DESCRIPTION	DATE APPROVED

DESIGNED BY: JAG | DATE: AUG 2007
DRAWN BY: DB | SCALE: AS SHOWN
CHECKED BY: WK | SOLICITATION NUMBER: W912P6-07-B-0006
SUBMITTED BY: JOHN GROBOSKI | DATE:

U.S. ARMY ENGINEER DISTRICT
CORPS OF ENGINEERS
CHICAGO, ILLINOIS

LITTLE CALUMET RIVER, INDIANA
LOCAL FLOOD PROTECTION
STAGE V, PHASE 2 - LEVEE

WORK LIMITS AND
CONTROL DATA LEVEE 5S
STA. 34+69 TO STA. 60+00

SHEET REFERENCE NUMBER:
C-03
SHEET 07 OF 138

PLOT DATE: 8/6/2007
FILENAME: D:\working\dms\0534\LCS5C03.DGN

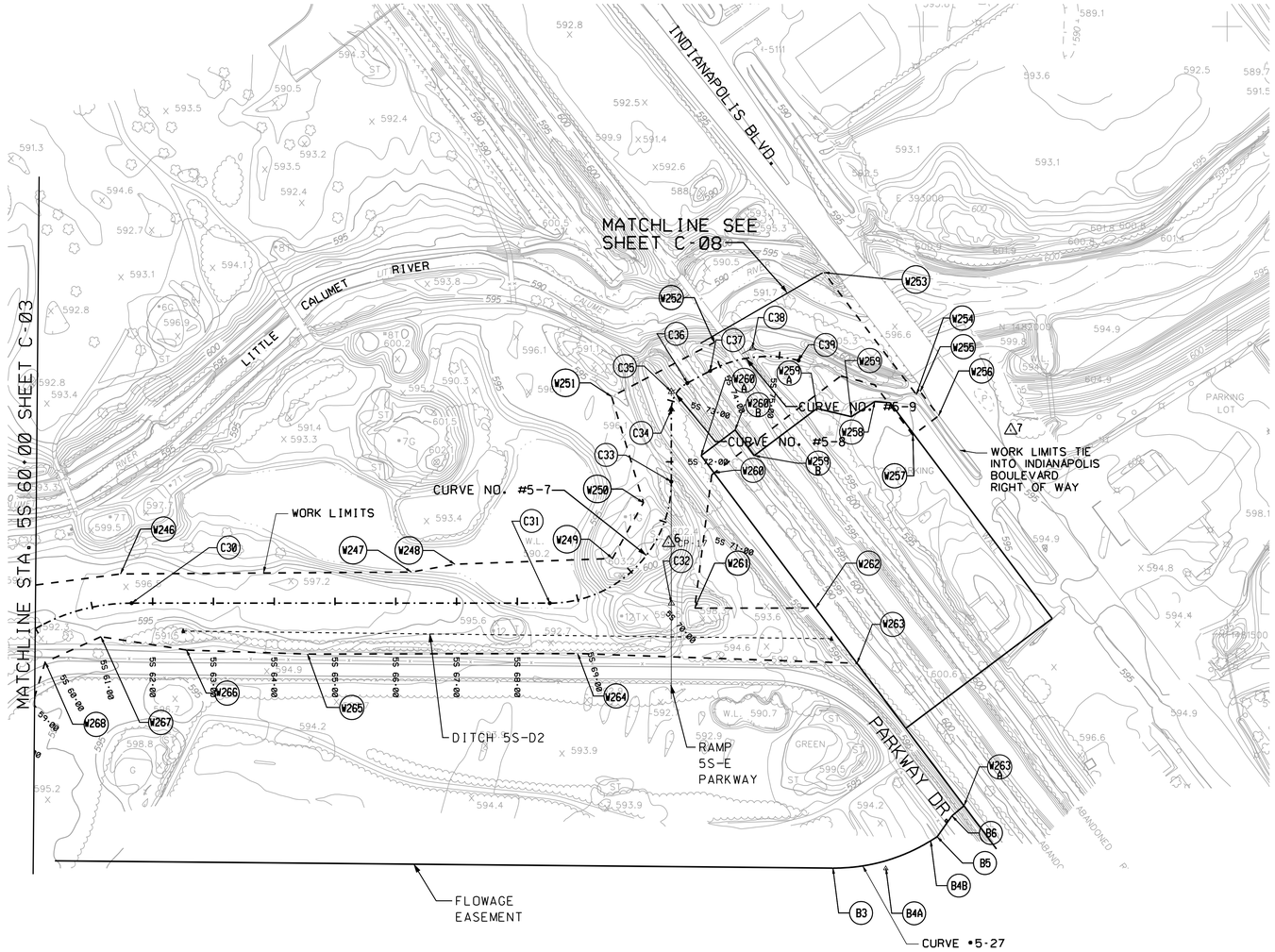

N

100 50 0 100 200
1 INCH = 100 FEET

US Army Corps of Engineers
Chicago District

LEGEND

E1	EXISTING PERMANENT EASEMENT POINT
B1	FLOWAGE EASEMENT POINT
W1	WORK LIMIT POINT
-·-·-·-·-	LEVEE/I-WALL CENTERLINE
----------	DITCH CENTERLINE
- - - - - -	WORK LIMIT LINE

WORK LIMIT COORDINATES

POINT	NORTHING	EASTING
W246	1481598.96	391679.28
W247	1481602.16	392157.87
W248	1481614.96	392229.52
W249	1481624.39	392488.67
W250	1481716.25	392539.63
W251	1481890.85	392487.38
W252	1481979.99	392656.15
W253	1482095.00	392836.86
W254	1481894.30	392988.72
W255	1481899.13	392995.10
W256	1481859.26	393025.27
W257	1481827.28	392983.01
W258	1481882.71	392920.26
W259	1481857.88	392881.90
W259A	1481871.24	392825.24
W259B	1481793.80	392722.07
W260	1481765.22	392655.99
W260A	1481793.89	392634.48
W260B	1481835.91	392690.46
W261	1481542.79	392624.01
W262	1481542.79	392822.95
W263	1481452.01	392891.09
W263A	1481217.37	393067.21
W264	1481467.96	392431.27
W265	1481467.07	391986.73
W266	1481473.79	391787.56
W267	1481495.60	391646.87
W268	1481453.93	391555.27

FLOWAGE EASEMENT COORDINATES

POINT	DESCRIPTION	NORTHING	EASTING
B3	CV #5-27 P.C.	1481114.83	392851.46
B4A	CV #5-27 P.I.	1481114.02	392938.41
B4B	CV #5-27 P.T.	1481159.84	393012.31
B5	P.I.	1481166.46	393022.98
B6	P.I.	1481200.72	393047.38

LEVEE CURVE DATA

CV #5-7
Delta= 90°00'00.00" (LT)
T= 200.00'
L= 314.16'
R= 200.00'

CV #5-8
Delta= 61°49'02.71" (RT)
T= 29.93'
L= 53.95'
R= 50.00'

CV #5-27
Delta= 55°4'45.02" (LT)
T= 86.95'
L= 169.27'
R= 300.00'

CV #5-9
Delta= 42°58'25.75" (RT)
T= 78.73'
L= 150.01'
R= 200.00'

LEVEE ALIGNMENT CONTROL POINTS

POINT NO.	DESCRIPTION	COORDINATES NORTHING	COORDINATES EASTING	STATIONING
C30	LEVEE ALIGNMENT	1481550.92	391697.48	5S 61+65.31
C31	CV #5-7 P.C.	1481550.92	392385.51	5S 68+53.54
C32	CV #5-7 P.I.	1481550.92	392585.51	5S 70+10.39
C33	CV #5-7 P.T.	1481750.92	392585.51	5S 71+67.49
C34	CV #5-8 P.C.	1481869.12	392585.51	5S 72+85.69
C35	CV #5-8 P.I.	1481899.06	392585.51	5S 72+87.45
C36	CV #5-8 P.T.	1481913.19	392611.90	5S 73+39.64
C37	CV #5-9 P.C.	1481933.33	392649.48	5S 73+82.34
C38	CV #5-9 P.I.	1481970.52	392718.88	5S 74+57.34
C39	CV #5-9 P.T.	1481950.42	392795.00	5S 75+32.29

ESTABLISHED HORIZONTAL & VERTICAL CONTROL STATION

POINT	NORTHING	EASTING	ELEVATION
△6	1481650.23	392581.21	602.47
△7	1481835.30	393144.17	594.96

NOTES:

1. FOR SYMBOLS, ABBREVIATIONS, AND GENERAL NOTES SEE SHEETS G-03 AND G-04.
2. ALL COORDINATES ARE BASED ON INDIANA STATE PLANE COORDINATES ZONE WEST, NAD27.
3. FOR CROSS SECTION SEE SHEETS C-31 AND C-32
4. FOR PLAN AND PROFILE SEE SHEETS C-16 AND C-17
5. FOR ACCESS RAMPS COORDINATES SEE SHEET C-57.
6. FOR DITCH COORDINATES SEE SHEET C-16.
7. FOR GATEWELL COORDINATES SEE SHEET C-49.

SYMBOL	AMENDMENT DESCRIPTION	DATE APPROVED	SYMBOL	DESCRIPTION	DATE APPROVED

DESIGNED BY: JAG
DATE: AUG 2007
DRAWN BY: DB
SCALE: AS SHOWN
CHECKED BY: WK
SOLICITATION NUMBER: W912P6-07-B-0006
SUBMITTED BY: JOHN GROBOSKI
DATE:

U.S. ARMY ENGINEER DISTRICT
CORPS OF ENGINEERS
CHICAGO, ILLINOIS

LITTLE CALUMET RIVER, INDIANA
LOCAL FLOOD PROTECTION
STAGE V, PHASE 2 - LEVEE

WORK LIMITS AND CONTROL DATA LEVEE 5S
STA. 60+00 TO STA. 75+32

SHEET REFERENCE NUMBER:
C-04
SHEET 08 OF 138

PLOT DATE: 8/3/2007
FILENAME: D:\working\dms10534\LCS5C04.DGN

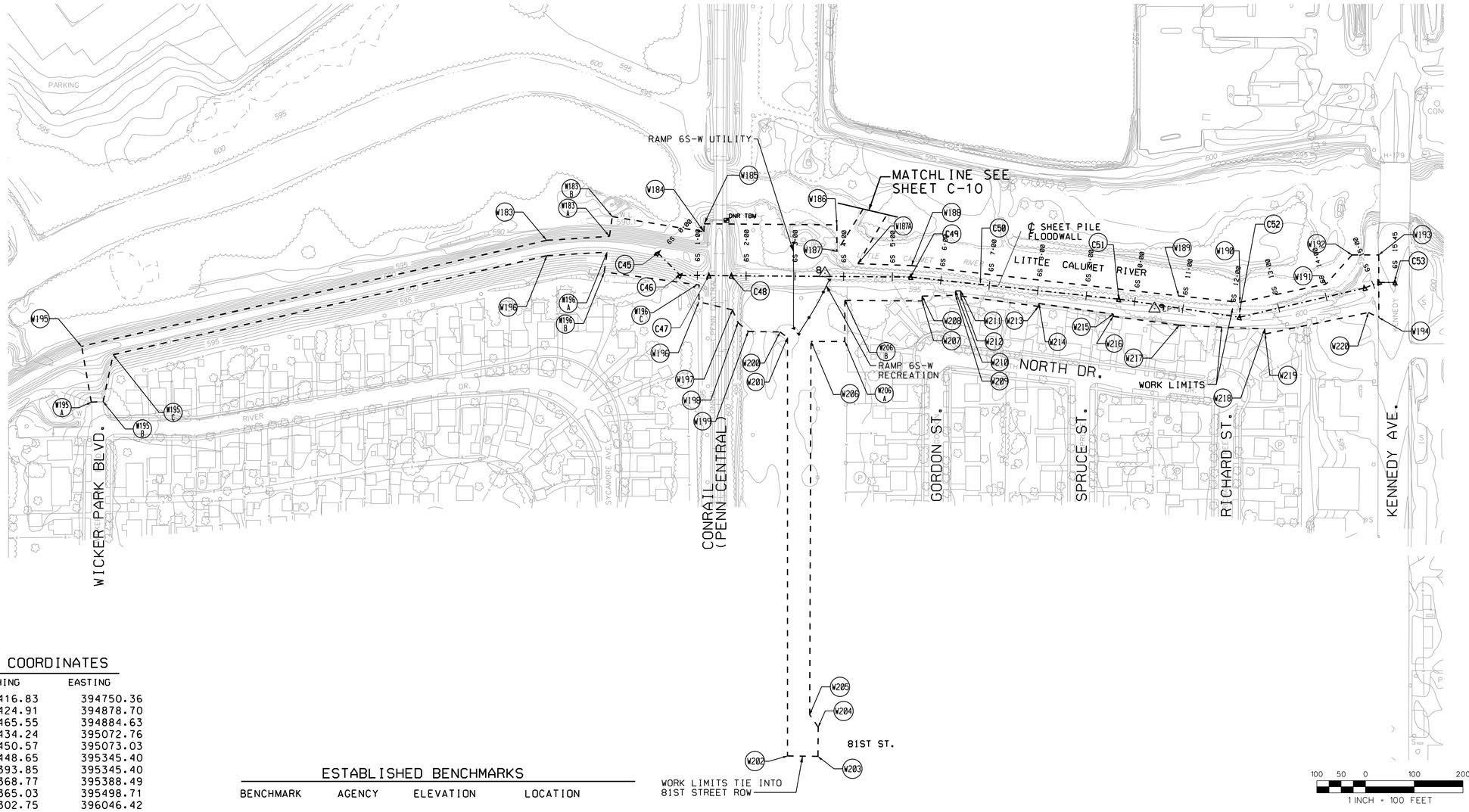

WORK LIMIT COORDINATES

POINT	NORTHING	EASTING
W183	1482416.83	394750.36
W183A	1482424.91	394878.70
W183B	1482465.55	394884.63
W184	1482434.24	395072.76
W185	1482450.57	395073.03
W186	1482448.65	395345.40
W187	1482393.85	395345.40
W187A	1482368.77	395388.49
W188	1482365.03	395498.71
W189	1482302.75	396046.42
W190	1482289.58	396172.08
W191	1482327.85	396349.32
W192	1482386.85	396402.32
W193	1482386.85	396457.10
W194	1482258.44	396457.31
W195	1482199.26	393795.79
W195A	1482084.84	393815.55
W195B	1482085.79	393839.79
W195C	1482182.18	393860.44
W196	1482290.52	395062.36
W196A	1482392.82	394874.02
W196B	1482351.85	394868.03
W196C	1482325.13	395062.55
W197	1482274.06	395131.16
W198	1482247.91	395142.63
W199	1482233.83	395163.61
W200	1482233.37	395228.93
W201	1482216.93	395244.16
W202	1481358.52	395244.16
W203	1481357.67	395306.65
W204	1481417.67	395307.18
W205	1481443.20	395289.66
W206	1482209.18	395292.29
W206A	1482209.19	395361.56
W206B	1482293.45	395361.77
W207	1482292.34	395520.24
W208	1482302.34	395520.31
W209	1482303.93	395588.93
W210	1482312.91	395588.93
W211	1482312.91	395599.65
W212	1482302.50	395599.65
W213	1482281.16	395759.08
W214	1482287.18	395760.00
W215	1482265.48	395912.65
W216	1482260.84	395912.00
W217	1482242.52	396047.83
W218	1482234.71	396223.21
W219	1482224.66	396224.02
W220	1482268.56	396436.13

ESTABLISHED BENCHMARKS

BENCHMARK	AGENCY	ELEVATION	LOCATION
DNR TBM		601.622	CHISELED TRIANGLE IN SOUTH CONCRETE ABUTMENT ON THE CONRAIL RAILROAD BRIDGE

ESTABLISHED HORIZONTAL & VERTICAL CONTROL STATION

POINT	NORTHING	EASTING	ELEVATION
△8	1482349.10	395320.78	599.24
△9	1482276.59	395997.15	599.82

LEVEE/SHEET PILE FLOODWALL CENTERLINE COORDINATES

POINT	DESCRIPTION	NORTHING	EASTING	STATION	OFFSET
C45	P.I.	1482390.83	394978.17	0+00.00	0.00'
C46	P.I.	1482344.82	395024.19	0+65.00	0.00'
C47	P.I.	1482344.40	395082.66	1+23.41	0.00'
C48	P.I.	1482344.08	395128.83	1+69.58	0.00'
C49	P.I.	1482341.50	395496.68	5+37.41	0.00'
C50	P.I.	1482328.81	395639.72	6+81.03	0.00'
C51	P.I.	1482296.06	395923.82	9+67.02	0.00'
C52	P.I.	1482269.00	396171.45	12+16.12	0.00'
C53	P.I.	1482332.97	396489.47	15+41.00	0.00'

LEGEND

(C1)	CENTERLINE POINT AT LEVEE/SHEET PILE FLOODWALL
(W1)	WORK LIMIT POINT
-·-·-·-·-	LEVEE/SHEET PILE FLOODWALL CENTERLINE
- - - - - -	WORK LIMIT LINE

NOTES:

1. FOR SYMBOLS, ABBREVIATIONS, AND GENERAL NOTES SEE SHEETS G-03 AND G-04.
2. ALL COORDINATES ARE BASED ON INDIANA STATE PLANE COORDINATES ZONE WEST, NAD27.
3. FOR CROSS SECTION SEE SHEETS C-33 AND C-34
4. FOR PLAN AND PROFILE SEE SHEETS C-18
5. FOR ACCESS RAMPS COORDINATES SEE SHEET C-59.

US Army Corps of Engineers
Chicago District

SYMBOL	AMENDMENT DESCRIPTION	DATE APPROVED	SYMBOL	DESCRIPTION	DATE APPROVED

DESIGNED BY: JAG
DATE: AUG 2007
DRAWN BY: DB
SCALE: AS SHOWN
CHECKED BY: WK
SOLICITATION NUMBER: W912P6-07-B-0006
SUBMITTED BY: JOHN GROBOSKI
DATE:

U.S. ARMY ENGINEER DISTRICT
CORPS OF ENGINEERS
CHICAGO, ILLINOIS

LITTLE CALUMET RIVER, INDIANA
LOCAL FLOOD PROTECTION
STAGE V, PHASE 2 - LEVEE

WORK LIMITS AND CONTROL DATA LEVEE 6S

SHEET REFERENCE NUMBER:
C-05
SHEET 09 OF 138

PLOT DATE: 8/6/2007
FILENAME: D:\working\sms10534\LCS5C05.DGN

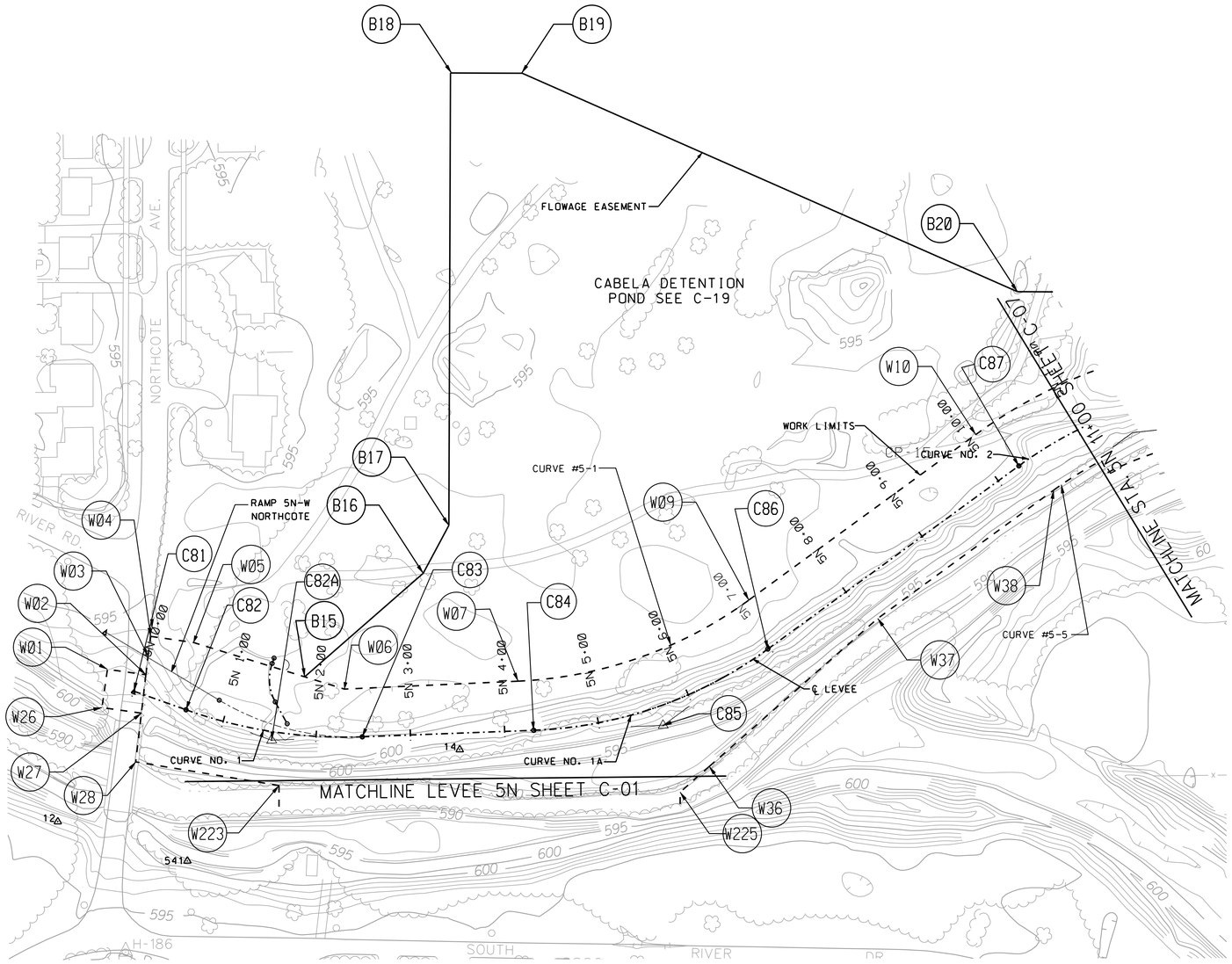

N

60 30 0 60 120

1 INCH = 60 FEET

LEVEE CURVE DATA

CURVE DATA FOR CURVE #1
Delta= 21°48'00.06" (L)
T= 96.28'
L= 190.24'
R= 500.00'

CURVE DATA FOR CURVE #2
Deta= 55°31'17.81" (L)
T= 236.86'
L= 436.07'
R= 450.00'

CURVE DATA FOR CURVE #1A
Delta= 33°55'57.30" (L)
T= 137.29'
L= 266.51'
R= 450.00'

WORK LIMIT CURVE DATA

CURVE DATA FOR CURVE #5-1
Delta= 33°29'35.77" (L)
T= 135.41'
L= 263.05'
R= 450.00'

CURVE DATA FOR CURVE #5-5
Delta= 29°42'40.36" (R)
T= 103.45'
L= 202.24'
R= 390.00'

LEGEND

C1	CENTERLINE POINT AT LEVEE
W1	WORK LIMIT POINT
-·-·-·-·-	LEVEE CENTERLINE
- - - - - - -	WORK LIMIT LINE

WORK LIMITS COORDINATES

POINT	NORTHING	EASTING
W01	1481579.08	389851.08
W02	1481573.27	389891.87
W03	1481593.14	389894.18
W04	1481623.13	389898.40
W05	1481607.49	389942.44
W06	1481558.08	390102.39
W07	1481566.49	390286.52
W09	1481652.47	390531.18
W10	1481827.97	390771.77
W26	1481538.49	389845.31
W27	1481532.54	389887.12
W28	1481480.90	389881.10
W224	1481455.90	390033.03
W225	1481448.81	390458.30
W36	1481476.03	390489.28
W37	1481632.97	390667.87
W38	1481768.99	390854.35

LEVEE ALIGNMENT CONTROL POINTS

POINT NO.	DESCRIPTION	COORDINATES NORTHING	COORDINATES EASTING	STATIONING
C81	LEVEE ALIGNMENT	1481555.90	389879.10	5N 0+00
C82	P. C. CURVE # 1	1481536.18	389934.41	5N 0+58.71
C82A	P. I. CURVE # 1	1481503.84	390025.10	5N 1+5342
C83	P. T. CURVE # 1	1481507.50	390121.32	5N 2+48.52
C84	P. C. CURVE # 1A	1481514.41	390303.08	5N 4+31.03
C85	P. I. CURVE # 1A	1481519.62	390440.27	5N 5+62.37
C86	P. T. CURVE # 1A	1481600.53	390551.19	5N 6+97.40
C87	P. C. CURVE # 2	1481794.78	390817.48	5N 10+26.97

FLOWAGE EASEMENT COORDINATES

POINT NO.	COORDINATES NORTHING	COORDINATES EASTING
B15	1481571.10	390060.25
B16	1481680.94	390185.88
B17	1481731.72	390213.08
B18	1482211.43	390214.84
B19	1482211.15	390290.88
B20	1481979.47	390815.99

ESTABLISHED HORIZONTAL CONTROL STATIONS

△ 12	- REBAR WITH CAP	N 1481417.50 E 389798.51
△ 541	- REBAR WITH CAP	N 1481375.90 E 389935.94
△ 14	- REBAR WITH CAP	N 1481493.89 E 390224.67

NOTES:

1. FOR SYMBOLS, ABBREVIATIONS AND GENERAL NOTES SEE SHEETS G-03 AND G-04.
2. ALL COORDINATES ARE BASED ON INDIANA STATE PLANE COORDINATES ZONE WEST, NAD27.
3. FOR CROSS SECTION SEE SHEET C-35
4. FOR PLAN AND PROFILE SEE SHEET C-19
5. FOR ACCESS RAMPS COORDINATES SEE SHEET C-57.
6. FOR CABELA LEVEE TIE BACK COORDINATES SEE SHEET C-57.

US Army Corps of Engineers
Chicago District

SYMBOL	AMENDMENT DESCRIPTION	DATE APPROVED	SYMBOL	DESCRIPTION	DATE APPROVED

DESIGNED BY: JAG
DATE: AUG 2007
DRAWN BY: DB
SCALE: AS SHOWN
CHECKED BY: WK
SOLICITATION NUMBER: W912P6-07-B-0006
SUBMITTED BY: JOHN GROBOSKI
DATE:

U.S. ARMY ENGINEER DISTRICT
CORPS OF ENGINEERS
CHICAGO, ILLINOIS

LITTLE CALUMET RIVER, INDIANA
LOCAL FLOOD PROTECTION
STAGE V, PHASE 2 - LEVEE

WORK LIMITS AND CONTROL DATA
STA. 5N 00+00 TO 5N 11+00

SHEET REFERENCE NUMBER:
C-06
SHEET 10 OF 138

PLOT DATE: 8/3/2007
FILENAME: D:\working\gms10534\LCS5C06.DGN

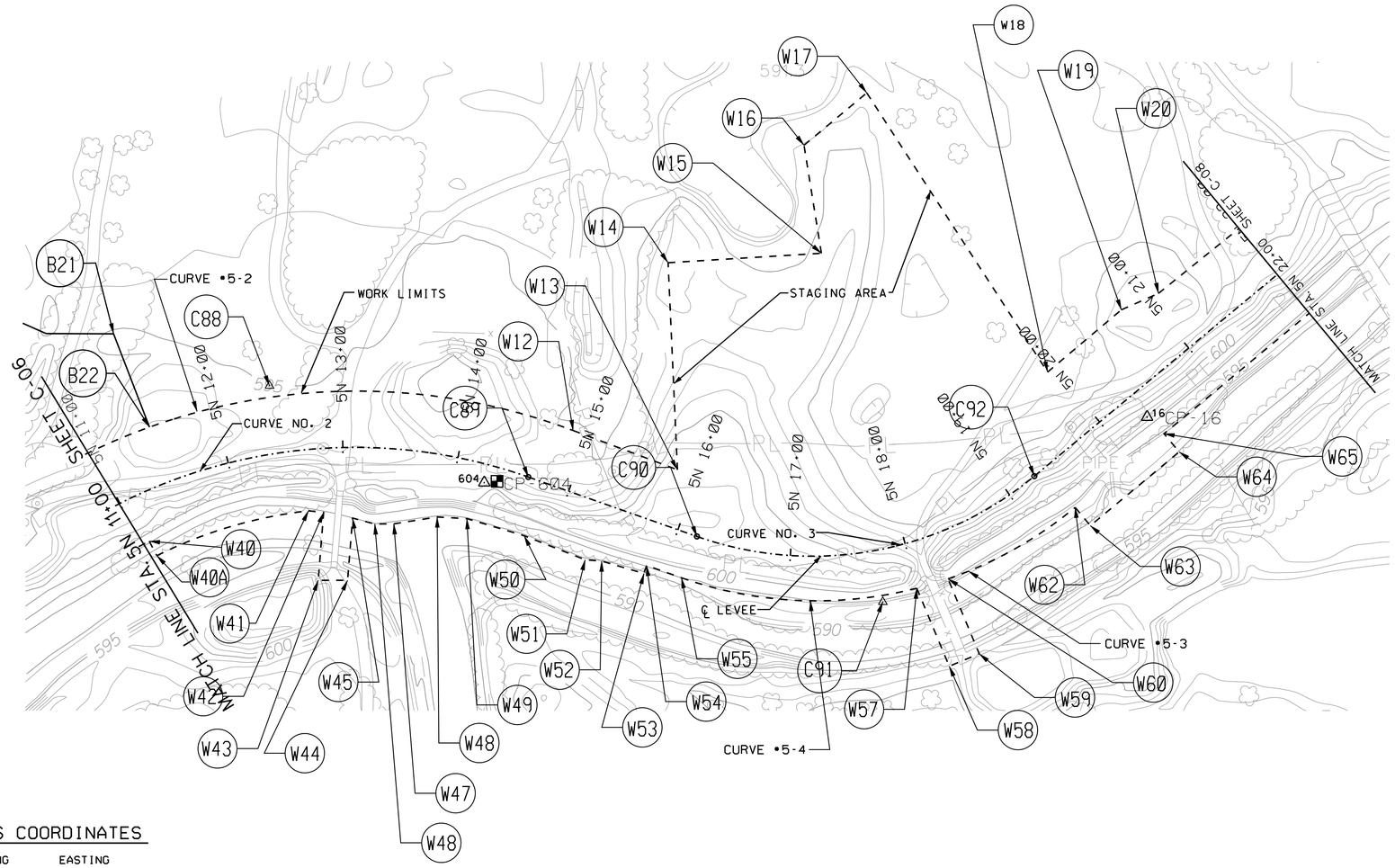

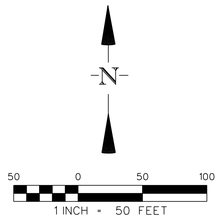

LEGEND

C1	CENTERLINE POINT AT LEVEE
W1	WORK LIMIT POINT
-·-·-·-·-	LEVEE CENTERLINE
- - - - - -	WORK LIMIT LINE

WORK LIMITS COORDINATES

POINT	NORTHING	EASTING
W12	1481895.78	391270.90
W13	1481861.84	391361.01
W14	1482040.61	391352.94
W15	1482048.78	391485.31
W16	1482142.10	391470.27
W17	1482187.25	391524.40
W18	1481946.22	391680.56
W19	1481999.94	391744.20
W20	1482014.12	391776.17
W40	1481800.33	390905.03
W40A	1481787.73	390911.58
W41	1481826.42	391042.43
W42	1481825.07	391055.61
W43	1481766.43	391050.93
W44	1481766.43	391076.29
W45	1481820.21	391080.58
W46	1481815.07	391099.73
W47	1481815.22	391116.18
W48	1481821.13	391153.63
W49	1481819.71	391179.26
W50	1481804.94	391228.64
W51	1481784.24	391281.33
W52	1481783.06	391295.62
W53	1481772.38	391332.06
W54	1481779.25	391334.39
W55	1481768.64	391364.50
W56	1482098.74	391480.83
W57	1481759.66	391567.58
W58	1481692.30	391595.61
W59	1481703.07	391621.50
W60	1481767.74	391594.59
W61	1482098.74	391480.83
W62	1481829.40	391704.34
W63	1481813.64	391717.42
W64	1481877.28	391794.11
W65	1481893.04	391781.03

LEVEE CURVE DATA

CURVE DATA FOR CURVE #2
Deta= 55°31'17.81" (L)
T= 236.86'
L= 436.07'
R= 450.00'

CURVE DATA FOR CURVE #3
Delta= 59°05'42.99" (LT)
T= 170.06'
L= 309.42'
R= 300.00'

WORK LIMIT CURVE DATA

CURVE DATA FOR CURVE #5-2
Delta= 56°44'39.93" (LT)
T= 286.24'
L= 524.90'
R= 530.00'

CURVE DATA FOR CURVE #5-3
Delta= 20°43'16.59" (LT)
T= 63.99'
L= 126.58'
R= 350.00'

CURVE DATA FOR CURVE #5-4
Delta= 33°45'46.50" (LT)
T= 106.21'
L= 206.25'
R= 350.00'

LEVEE ALIGNMENT CONTROL POINTS

POINT NO.	DESCRIPTION	COORDINATES NORTHING	COORDINATES EASTING	STATIONING
C87	P. C. CURVE # 2	1481794.78	390817.48	5N 10+26.97
C88	P. I. CURVE # 2	1481934.36	391008.85	5N 12+45.10
C89	P. T. CURVE # 2	1481855.64	391232.24	5N 14+63.04
C90	P. C. CURVE # 3	1481804.33	391377.83	5N 16+17.40
C91	P. I. CURVE # 3	1481747.80	391538.24	5N 17+72.13
C92	P. T. CURVE # 3	1481856.40	391669.10	5N 19+27.23

ESTABLISHED HORIZONTAL CONTROL STATIONS

△ 604 - MONUMENT W/CAP N 1481850.79 E 391194.27

△ 16 - REBAR WITH CAP N 1481907.43 E 391766.44

ESTABLISHED VERTICAL CONTROL STATIONS

BENCHMARK	AGENCY	ELEVATION	LOCATION
LCR604 ■ MONUMENT W/BRASS CAP	U.S.A.C.O.E.	598.65	±40' NORTH OF ℄ LITTLE CALUMET RIVER & ±50' EAST OF ℄ HART DITCH

FLOWAGE EASEMENT COORDINATES

POINT NO.	COORDINATES NORTHING	COORDINATES EASTING
B21	1481979.25	390874.23
B22	1481898.69	390905.26

NOTES:

1. FOR SYMBOLS, ABBREVIATIONS AND GENERAL NOTES, SEE SHEETS G-03 AND G-04.
2. ALL COORDINATES ARE BASED ON INDIANA STATE PLANE COORDINATES ZONE WEST, NAD27.
3. FOR CROSS SECTION SEE SHEETS C-35 AND C-36
4. FOR PLAN AND PROFILE SEE SHEET C-20

US Army Corps of Engineers Chicago District

SYMBOL	AMENDMENT DESCRIPTION	DATE APPROVED	SYMBOL	DESCRIPTION	DATE APPROVED

DESIGNED BY: JAG | DATE: AUG 2007
DRAWN BY: DB | SCALE: AS SHOWN
CHECKED BY: WK | SOLICITATION NUMBER: W912P6-07-B-0006
SUBMITTED BY: JOHN GROBOSKI | DATE:

U.S. ARMY ENGINEER DISTRICT
CORPS OF ENGINEERS
CHICAGO, ILLINOIS

LITTLE CALUMET RIVER, INDIANA
LOCAL FLOOD PROTECTION
STAGE V, PHASE 2 - LEVEE

WORK LIMITS AND CONTROL DATA
STA. 5N 11+00 to 5N 22+00

SHEET REFERENCE NUMBER:
C-07
SHEET 11 OF 138

PLOT DATE: 8/13/2007
FILENAME: D:\workgp\dms10534\LCS5C07.DGN

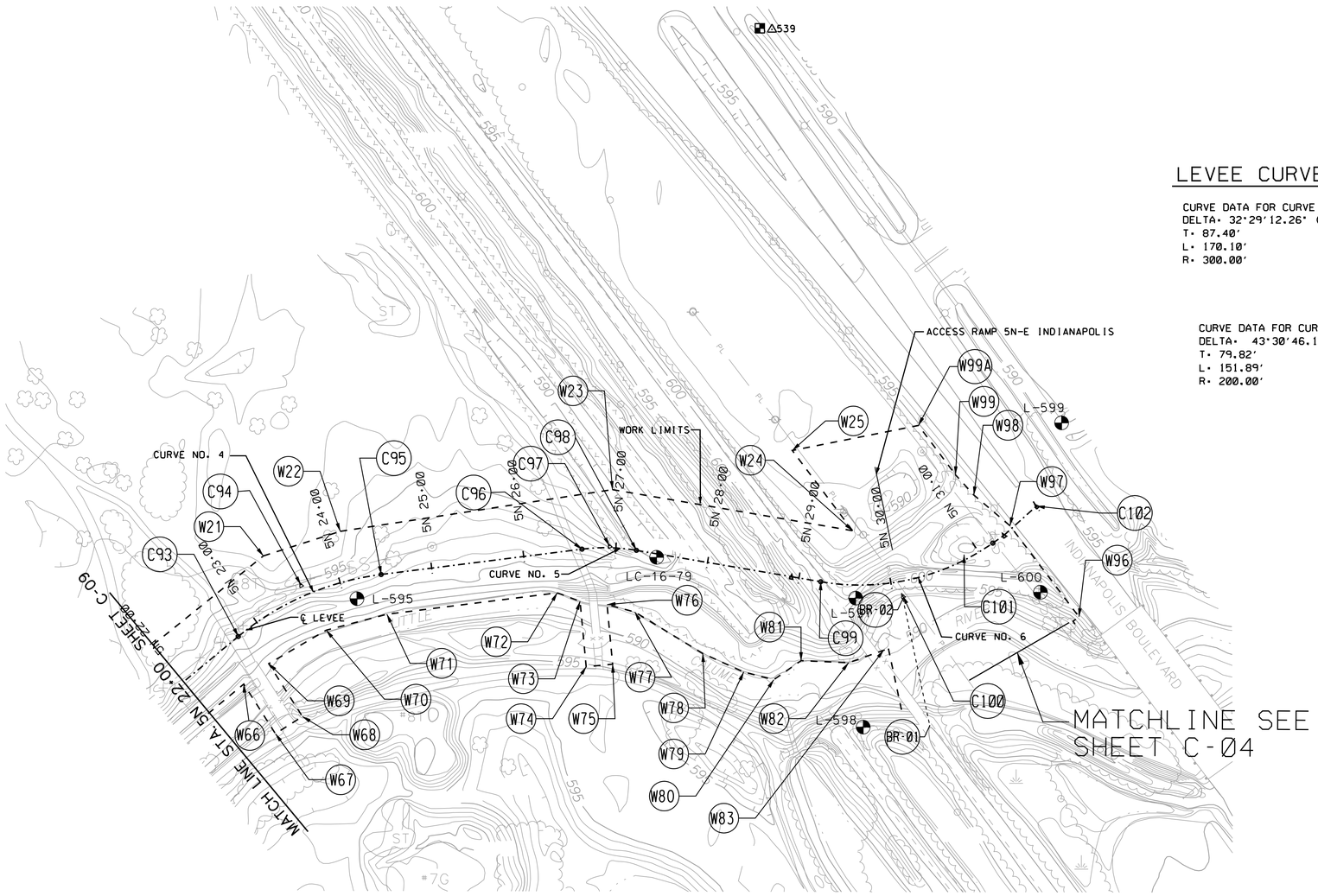

N

60 30 0 60 120

1 INCH = 60 FEET

LEVEE CURVE DATA

CURVE DATA FOR CURVE #4
DELTA= 32°29'12.26" (RT)
T= 87.40'
L= 170.10'
R= 300.00'

CURVE DATA FOR CURVE #5
DELTA= 16°52'43.17" (RT)
T= 29.67'
L= 58.92'
R= 200.00'

CURVE DATA FOR CURVE #6
DELTA= 43°30'46.16" (LT)
T= 79.82'
L= 151.89'
R= 200.00'

LEGEND

(C1)	CENTERLINE POINT AT LEVEE
(W1)	WORK LIMIT POINT
—·—·—·—	LEVEE CENTERLINE
- - - - - -	WORK LIMIT LINE

WORK LIMITS COORDINATES

POINT	NORTHING	EASTING
W21	1482165.51	391963.99
W22	1482192.02	392046.90
W23	1482237.07	392340.33
W24	1482192.71	392599.26
W25	1482279.26	392534.26
W66	1482027.39	391942.96
W67	1481973.87	391977.04
W68	1481992.36	392006.08
W69	1482049.37	391969.78
W70	1482085.46	392031.79
W71	1482102.62	392097.24
W72	1482125.73	392280.83
W73	1482116.55	392305.43
W74	1482046.08	392312.06
W75	1482048.76	392340.56
W76	1482113.04	392334.51
W77	1482105.08	392364.57
W78	1482060.34	392437.72
W79	1482040.31	392481.88
W80	1482032.07	392514.27
W81	1482052.68	392543.71
W82	1482050.33	392594.93
W83	1482063.88	392632.62
W96	1482099.83	392843.24
W97	1482198.04	392768.93
W98	1482231.28	392729.99
W99	1482253.02	375590.05
W99A	1482306.26	392670.26

LEVEE ALIGNMENT CONTROL POINTS

POINT NO.	DESCRIPTION	COORDINATES NORTHING	COORDINATES EASTING	STATIONING
C93	P. C. CURVE # 4	1482078.73	391937.02	22+92.60
C94	P. I. CURVE # 4	1482134.55	392004.28	23+62.77
C95	P. T. CURVE # 4	1482145.51	392091.00	24+45.30
C96	P. C. CURVE # 5	1482172.86	392307.51	26+63.31
C97	P. I. CURVE # 5	1482176.58	392336.95	26+93.20
C98	P. T. CURVE # 5	1482171.59	392366.20	27+22.26
C99	P. C. CURVE # 6	1482137.71	392564.90	29+33.54
C100	P. I. CURVE # 6	1482122.65	392653.15	30+06.49
C101	P. T. CURVE # 6	1482167.10	392719.48	30+85.43
C102	LEVEE ALIGNMENT	1482219.26	392797.35	31+79.09

PEDISTRIAN BRIDGE COORDINATES

POINT NO.	DESCRIPTION	COORDINATES NORTHING	COORDINATES EASTING
BR-01	INSIDE FACE OF ABUTMENT	1481982.51	392682.43
BR-02	INSIDE FACE OF ABUTMENT	1482119.48	392653.46

NOTES:

COORDINATES WERE TAKEN AT THE INSIDE FACE OF THE ABUTMENT AT THE CENTERLINE OF THE BRIDGE, AS SHOWN ON DETAIL 'A'.

BRIDGE ABUTMENTS AND INTERMEDIATE BENTS ARE PERPENDICULAR TO THE CENTERLINE OF THE BRIDGE.

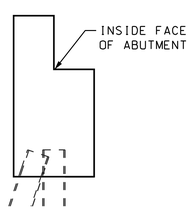

DETAIL 'A'

NOTES:

1. FOR SYMBOLS, ABBREVIATIONS AND GENERAL NOTES SEE SHEETS G-03 AND G-04.
2. ALL COORDINATES ARE BASED ON INDIANA STATE PLANE COORDINATES ZONE WEST, NAD27.
3. FOR CROSS SECTION SEE SHEETS C-36 AND C-37.
4. FOR PLAN AND PROFILE SEE SHEETS C-21.
5. FOR ACCESS RAMPS COORDINATES SEE SHEET C-57.
6. FOR CULVERT COORDINATES SEE SHEET C-50.

ESTABLISHED HORIZONTAL CONTROL STATIONS

△ 539 - "X" IN CONC CURB N 1482733.36 E 392512.35

ESTABLISHED VERTICAL CONTROL STATIONS

⊞ CHISELED "X" IN TOP OF CONC. CURB	U.S.A.C.O.E.	595.49	±60' SOUTH OF NORTH-WEST CORNER OF CONC. CURB AT K-MART PARKING LOT & ±2 SOUTH OF BREAK IN CURB FOR DRAINAGE N 1482734.60 E 392499.22

US Army Corps of Engineers
Chicago District

SYMBOL	AMENDMENT DESCRIPTION	DATE APPROVED	SYMBOL	DESCRIPTION	DATE APPROVED

DESIGNED BY: JAG
DATE: AUG 2007
DRAWN BY: DB
SCALE: AS SHOWN
CHECKED BY: WK
SOLICITATION NUMBER: W912P6-07-B-0006
SUBMITTED BY: JOHN GROBOSKI
DATE:

U.S. ARMY ENGINEER DISTRICT
CORPS OF ENGINEERS
CHICAGO, ILLINOIS

LITTLE CALUMET RIVER, INDIANA
LOCAL FLOOD PROTECTION
STAGE V, PHASE 2 - LEVEE

WORK LIMITS AND CONTROL DATA
STA. 5N 22+00 TO 5N 31+71

SHEET REFERENCE NUMBER:
C-08
SHEET 12 OF 138

PLOT DATE: 8/3/2007
FILENAME: D:\working\dms\953A\LCS5C08.DGN

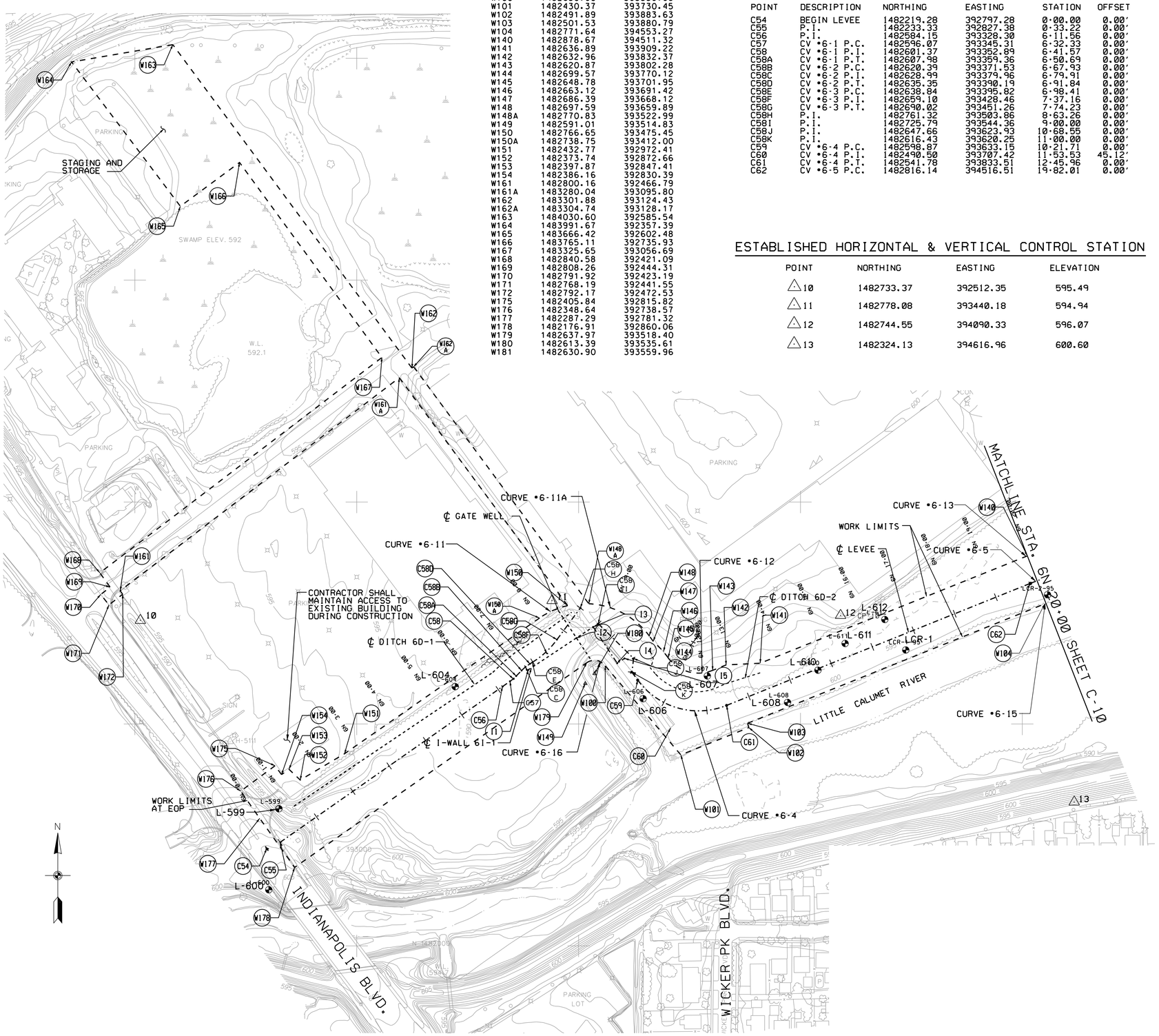

WORK LIMIT COORDINATES

POINT	NORTHING	EASTING
W100	1482630.90	393559.98
W101	1482430.37	393730.45
W102	1482491.89	393883.63
W103	1482501.53	393880.79
W104	1482771.64	394553.27
W140	1482878.67	394511.32
W141	1482636.89	393909.22
W142	1482632.96	393832.37
W143	1482620.87	393802.28
W144	1482699.57	393770.12
W145	1482648.78	393701.95
W146	1482663.12	393691.42
W147	1482686.39	393668.12
W148	1482697.59	393659.89
W148A	1482770.83	393522.99
W149	1482591.01	393514.83
W150	1482766.65	393475.45
W150A	1482738.75	393412.00
W151	1482432.77	392972.41
W152	1482373.74	392872.66
W153	1482397.87	392847.41
W154	1482386.16	392830.39
W161	1482800.16	392466.79
W161A	1483280.04	393095.80
W162	1483301.88	393124.43
W162A	1483304.74	393128.17
W163	1484030.60	392585.54
W164	1483991.67	392357.39
W165	1483666.42	392602.48
W166	1483765.11	392735.93
W167	1483325.65	393056.69
W168	1482840.58	392421.09
W169	1482808.26	392444.31
W170	1482791.92	392423.19
W171	1482768.19	392441.55
W172	1482792.17	392472.53
W175	1482405.84	392815.82
W176	1482348.64	392738.57
W177	1482287.29	392781.32
W178	1482176.91	392860.06
W179	1482637.97	393518.40
W180	1482613.39	393535.61
W181	1482630.90	393559.96

LEVEE CENTERLINE COORDINATES

POINT	DESCRIPTION	NORTHING	EASTING	STATION	OFFSET
C54	BEGIN LEVEE	1482219.28	392797.28	0+00.00	0.00'
C55	P.I.	1482233.33	392827.38	0+33.22	0.00'
C56	P.I.	1482584.15	393328.30	6+11.56	0.00'
C57	CV •6-1 P.C.	1482596.07	393345.31	6+32.33	0.00'
C58	CV •6-1 P.I.	1482601.37	393352.89	6+41.57	0.00'
C58A	CV •6-1 P.T.	1482607.98	393359.36	6+50.69	0.00'
C58B	CV •6-2 P.C.	1482620.39	393371.53	6+67.93	0.00'
C58C	CV •6-2 P.I.	1482628.99	393379.96	6+79.91	0.00'
C58D	CV •6-2 P.T.	1482635.35	393390.19	6+91.84	0.00'
C58E	CV •6-3 P.C.	1482638.84	393395.82	6+98.41	0.00'
C58F	CV •6-3 P.I.	1482659.10	393428.46	7+37.16	0.00'
C58G	CV •6-3 P.T.	1482690.02	393451.26	7+74.23	0.00'
C58H	P.I.	1482761.32	393503.86	8+63.26	0.00'
C58I	P.I.	1482725.79	393544.36	9+00.00	0.00'
C58J	P.I.	1482647.66	393623.93	10+68.55	0.00'
C58K	P.I.	1482616.43	393620.25	11+00.00	0.00'
C59	CV •6-4 P.C.	1482598.87	393633.15	10+21.71	0.00'
C60	CV •6-4 P.I.	1482490.50	393707.42	11+53.53	45.12'
C61	CV •6-4 P.T.	1482541.78	393833.51	12+45.96	0.00'
C62	CV •6-5 P.C.	1482816.14	394516.51	19+82.01	0.00'

ESTABLISHED HORIZONTAL & VERTICAL CONTROL STATION

POINT	NORTHING	EASTING	ELEVATION
△10	1482733.37	392512.35	595.49
△11	1482778.08	393440.18	594.94
△12	1482744.55	394090.33	596.07
△13	1482324.13	394616.96	600.60

CURVE DATA

LEVEE

CV •6-1

DELTA 10° 56' 00.00" (LT)
TANGENT 9.25
LENGTH 18.44
RADIUS 100

CV •6-2

DELTA 13° 73' 00.00" (RT)
TANGENT 12.02
LENGTH 23.97
RADIUS 100

CV •6-3

DELTA 21° 75' 00.00" (LT)
TANGENT 38.42
LENGTH 75.92
RADIUS 200

CV •6-5

DELTA 38° 06' 16.68" (RT)
TANGENT 155.41
LENGTH 299.27
RADIUS 450.00

CV •6-4

DELTA 75° 34' 50.12" (LT)
TANGENT 131.819
LENGTH 224.252
RADIUS 170

WORK LIMITS

CV •6-11

DELTA 22°12'03.36"(RT)
TANGENT 35.32'
LENGTH 69.75'
RADIUS 180.00

CV •6-11A

DELTA 51°05'52.75" (LT)
TANGENT 86.04'
LENGTH 160.53'
RADIUS 180.00

CV •6-13

DELTA 36° 04' 26.12" (RT)
TANGENT 149.79
LENGTH 289.62
RADIUS 460.00

CV •6-12

DELTA 75° 33' 12.10" (LT)
TANGENT 65.88
LENGTH 112.09
RADIUS 85.00

CV •6-15

DELTA 43° 04' 43.91" (LT)
TANGENT 136.17
LENGTH 259.39
RADIUS 345.00

CV •6-16

DELTA 89° 18' 31.67" (LT)
TANGENT 29.64
LENGTH 46.76
RADIUS 30.00

I-WALL CENTERLINE COORDINATES

POINT	DESCRIPTION	NORTHING	EASTING
I1	BEGIN I-WALL	1482621.81	393386.60
I2	P.I.	1482693.77	393495.13
I3	P.I.	1482718.73	393532.77
I4	P.I.	1482636.79	393587.10
I5	P.I.	1482647.67	393603.52

LEGEND

(C1) CENTERLINE POINT AT LEVEE

(W1) WORK LIMIT POINT

-·-·-·- LEVEE CENTERLINE

---------- DITCH CENTERLINE

- - - - - - WORK LIMIT LINE

NOTES:

1. FOR SYMBOLS, ABBREVIATIONS, AND GENERAL NOTES SEE SHEETS G-03 AND G-04.
2. ALL COORDINATES ARE BASED ON INDIANA STATE PLANE COORDINATES ZONE WEST, NAD27.
3. FOR CROSS SECTION SEE SHEETS C-38 AND C-39.
4. FOR PLAN AND PROFILE AND DITCH COORDINATES SEE SHEETS C-22 AND C-23.
5. FOR ACCESS RAMPS COORDINATES SEE SHEET C-58.
6. FOR GATEWELL AND CULVERT COORDINATES SEE SHEETS C-45 AND C-51.

100 50 0 100 200
1 INCH = 100 FEET

US Army Corps of Engineers
Chicago District

SYMBOL	AMENDMENT DESCRIPTION	DATE APPROVED	SYMBOL	DESCRIPTION	DATE APPROVED

DESIGNED BY: JAG | DATE: AUG 2007
DRAWN BY: DB | SCALE: AS SHOWN
CHECKED BY: WK | SOLICITATION NUMBER: W912P6-07-B-0006
SUBMITTED BY: JOHN GROBOSKI | DATE:

U.S. ARMY ENGINEER DISTRICT
CORPS OF ENGINEERS
CHICAGO, ILLINOIS

LITTLE CALUMET RIVER, INDIANA
LOCAL FLOOD PROTECTION
STAGE V, PHASE 2 - LEVEE

WORK LIMITS AND
CONTROL DATA LEVEE 6N
STA. 0+00 TO STA. 20+00

SHEET REFERENCE NUMBER:
C-09
SHEET 13 OF 138

PLOT DATE: 8/6/2007
FILENAME: D:\working\sms10534\LCS5C09.DGN

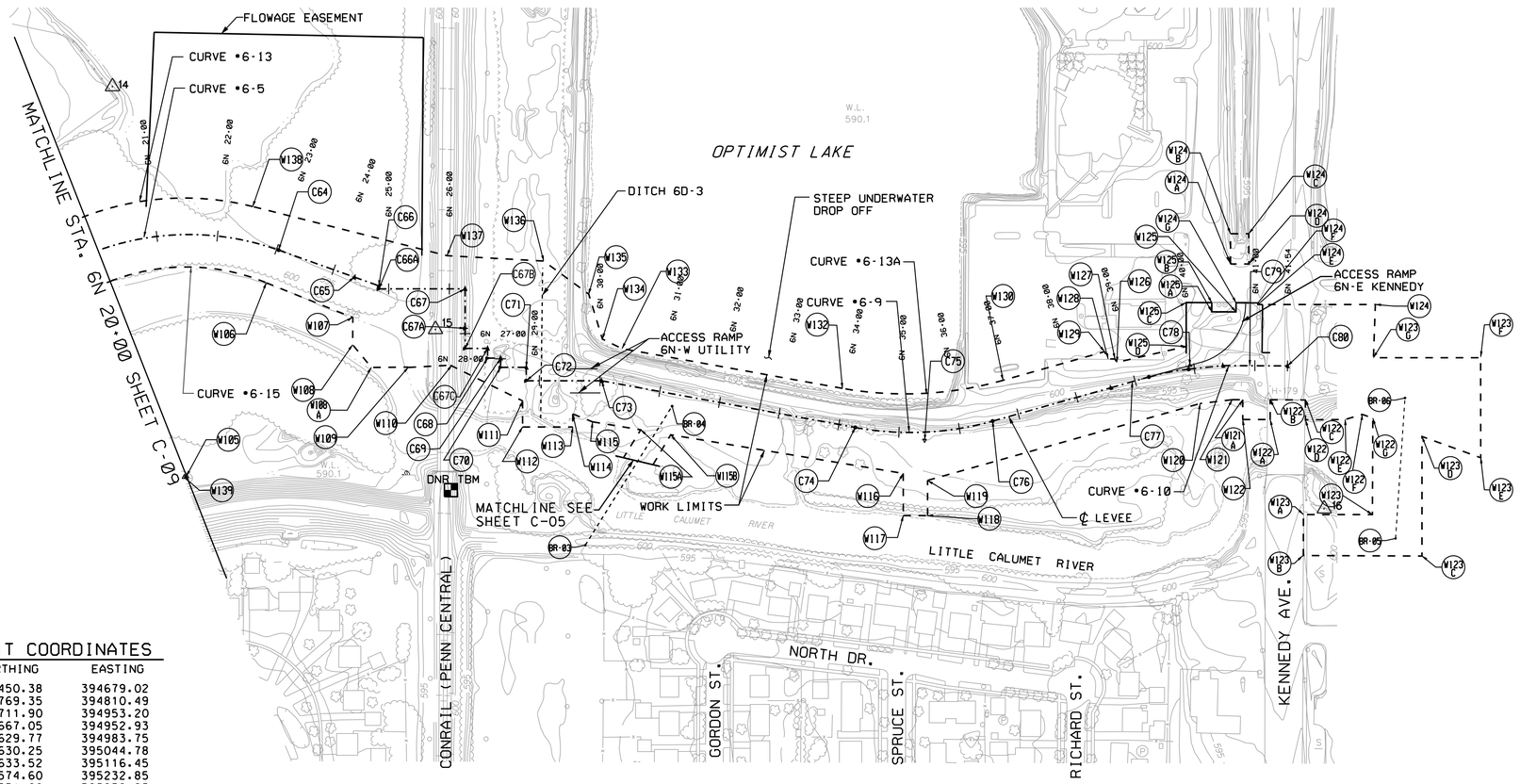

CURVE DATA

LEVEE

CV •6-5

DELTA 41°51'43.63" (LT)
TANGENT = 168.29'
LENGTH = 321.48'
RADIUS = 440.00'

CV •6-9

DELTA= 26°11'41.13" (LT)
TANGENT = 116.33'
LENGTH = 228.59'
RADIUS = 500.00'

CV •6-10

DELTA = 16°02'33.65" (RT)
TANGENT = 98.64'
LENGTH = 196.00'
RADIUS = 700.00'

WORK LIMITS

CV •6-13

DELTA = 35°05'41" (LT)
TANGENT = 145.46'
LENGTH= 281.76'
RADIUS= 460.00'

CV •6-13A

DELTA = 25°44'51.00" (RT)
TANGENT = 135.99'
LENGTH= 267.38'
RADIUS= 595.00'

CV •6-15

DELTA = 43° 04' 42.97" (LT)
TANGENT = 136.17
LENGTH = 259.39
RADIUS = 345.00

WORK LIMIT COORDINATES

POINT	NORTHING	EASTING
W105	1482450.38	394679.02
W106	1482769.35	394810.49
W107	1482711.90	394953.20
W108	1482667.05	394952.93
W108A	1482629.77	394983.75
W109	1482630.25	395044.78
W110	1482633.52	395116.45
W111	1482574.60	395232.85
W112	1482531.60	395232.85
W113	1482531.60	395315.54
W114	1482553.19	395315.54
W115	1482540.06	395348.13
W115A	1482526.88	395427.63
W115B	1482518.70	395476.96
W116	1482455.17	395860.17
W117	1482385.68	395860.23
W118	1482385.68	395900.23
W119	1482443.54	395900.18
W120	1482570.30	396349.32
W121	1482576.65	396402.32
W121A	1482576.65	396419.57
W122	1482543.98	396419.57
W122A	1482543.98	396464.81
W122B	1482576.60	396464.80
W122C	1482576.53	396522.52
W122D	1482543.47	396522.93
W122E	1482544.03	396588.49
W122F	1482552.46	396616.61
W122G	1482546.06	396634.00
W123	1482387.32	396633.25
W123A	1482387.32	396519.57
W123B	1482319.76	396519.50
W123C	1482318.88	396714.91
W123D	1482515.99	396714.91
W123E	1482480.92	396811.78
W123F	1482645.71	396811.59
W123G	1482645.78	396632.93
W124	1482733.43	396638.17
W124A	1482800.34	396399.52
W124B	1482850.14	396399.52
W124C	1482850.14	396429.68
W124D	1482800.34	396429.68
W124E	1482736.11	396444.56
W124F	1482733.43	396444.54
W124G	1482736.30	396408.59
W125	1482721.30	396408.51
W125A	1482721.52	396368.51
W125B	1482736.52	396368.59
W125C	1482736.75	396326.40
W125D	1482664.36	396326.40
W126	1482638.19	396212.06
W127	1482643.76	396208.94
W128	1482643.72	396197.83
W129	1482655.72	396191.79
W130	1482608.58	396024.73
W132	1482595.23	395759.93
W133	1482660.82	395396.78
W134	1482676.44	395364.38
W135	1482750.70	395341.88
W136	1482805.12	395267.65
W137	1482813.98	395108.35
W138	1482894.91	394788.22
W139	1482448.95	394675.46

LEVEE CENTERLINE COORDINATES

POINT	DESCRIPTION	NORTHING	EASTING	STATION	OFFSET
C64	CV #6-5 P.T.	1482823.20	394830.81	23+04.29	0.00'
C65	P.I.	1482778.60	394955.78	24+36.36	0.00'
C66	P.I.	1482764.22	394996.07	24+79.04	0.00'
C66A	P.I.	1482759.33	394996.07	24+83.93	0.00'
C67	P.I.	1482759.33	395138.22	26+26.20	0.00'
C67A	P.I.	1482694.36	395138.22	26+91.52	0.00'
C67B	P.I.	1482661.20	395138.22	27+24.12	0.00'
C67C	P.I.	1482661.20	395175.21	27+61.10	0.00'
C68	P.I.	1482645.07	395175.21	27+77.25	0.00'
C69	P.I.	1482645.07	395196.76	27+98.86	0.00'
C70	P.I.	1482629.88	395196.76	28+14.05	1.16'
C71	P.I.	1482629.88	395238.98	28+56.37	0.00'
C72	P.I.	1482607.77	395238.98	28+78.33	1.16'
C73	P.I.	1482607.77	395363.14	30+02.56	0.00'
C74	CV #6-9 P.C.	1482530.80	395781.08	34+47.87	0.00'
C75	CV #6-9 P.I.	1482509.73	395895.49	35+44.31	11.39'
C76	CV #6-9 P.T.	1482541.33	396007.44	36+56.38	0.00'
C77	CV #6-10 P.C.	1482606.29	396237.62	38+95.42	0.00'
C78	CV #6-10 P.I.	1482633.09	396332.50	39+92.04	7.01'
C79	CV #6-10 P.T.	1482632.60	396431.20	40+91.57	0.00'
C80	END LEVEE	1482632.29	396493.37	41+53.00	0.00'

ESTABLISHED HORIZONTAL & VERTICAL CONTROL STATION

POINT	NORTHING	EASTING	ELEVATION
△14	1483092.67	394557.08	594.92
△15	1482692.47	395089.39	599.86
△16	1482396.88	396553.85	600.50

ESTABLISHED BENCHMARKS

BENCHMARK	AGENCY	ELEVATION	LOCATION
DNR TBM		601.622	CHISELED TRIANGLE IN SOUTH CONCRETE ABUTMENT ON THE CONRAIL RAILROAD BRIDGE

FLOWAGE EASEMENT COORDINATES

POINT	DESCRIPTION	NORTHING	EASTING
B11	P.I.	1482894.54	394612.52
B12	P.I.	1483182.14	394625.63
B13	P.I.	1483173.51	395069.47
B14	P.I.	1482814.13	395066.96

PEDISTRIAN BRIDGE COORDINATES

POINT NO.	DESCRIPTION	COORDINATES NORTHING	EASTING
BR-03	INSIDE FACE OF ABUTMENT	1482336.89	395336.28
BR-04	INSIDE FACE OF ABUTMENT	1482565.89	395479.30
BR-05	INSIDE FACE OF ABUTMENT	1482347.98	396671.41
BR-06	INSIDE FACE OF ABUTMENT	1482579.45	396686.99

NOTES:

COORDINATES WERE TAKEN AT THE INSIDE FACE OF THE ABUTMENT AT THE CENTERLINE OF THE BRIDGE, AS SHOWN ON DETAIL 'A'.

BRIDGE ABUTMENTS AND INTERMEDIATE BENTS ARE PERPENDICULAR TO THE CENTERLINE OF THE BRIDGE.

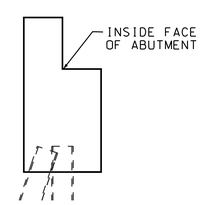

DETAIL 'A'

100 50 0 100 200
1 INCH = 100 FEET

LEGEND

(C1)	CENTERLINE POINT AT LEVEE/I-WALL
(W1)	WORK LIMIT POINT
-·-·-·-·-	LEVEE/I-WALL CENTERLINE
----------	DITCH CENTERLINE
- - - - - -	WORK LIMIT LINE

NOTES:

1. FOR SYMBOLS, ABBREVIATIONS, AND GENERAL NOTES SEE SHEETS G-03 AND G-04.
2. ALL COORDINATES ARE BASED ON INDIANA STATE PLANE COORDINATES ZONE WEST, NAD27.
3. FOR CROSS SECTION SEE SHEETS C-39, C-40, AND C-41.
4. FOR PLAN AND PROFILE SEE SHEETS C-23, C-24 AND C-25.
5. FOR ACCESS RAMPS COORDINATES SEE SHEET C-58.
6. FOR DITCH COORDINATES SEE C-24.
7. FOR CULVERT AND GATEWELL COORDINATES SEE SHEETS C-46, C-47 AND C-48.

US Army Corps of Engineers
Chicago District

SYMBOL	AMENDMENT DESCRIPTION	DATE APPROVED	SYMBOL	DESCRIPTION	DATE APPROVED

DESIGNED BY: JAG
DATE: AUG 2007
DRAWN BY: DB
SCALE: AS SHOWN
CHECKED BY: WK
SOLICITATION NUMBER: W912P6-07-B-0006
SUBMITTED BY: JOHN GROBOSKI
DATE:

U.S. ARMY ENGINEER DISTRICT
CORPS OF ENGINEERS
CHICAGO, ILLINOIS

LITTLE CALUMET RIVER, INDIANA
LOCAL FLOOD PROTECTION
STAGE V, PHASE 2 - LEVEE

WORK LIMITS AND CONTROL DATA LEVEE, 6N
STA. 20+00 TO STA. 41+54

SHEET REFERENCE NUMBER:
C-10
SHEET 14 OF 138

PLOT DATE: 8/3/2007
FILENAME: D:\working\dms10534\LCS5C10.DGN

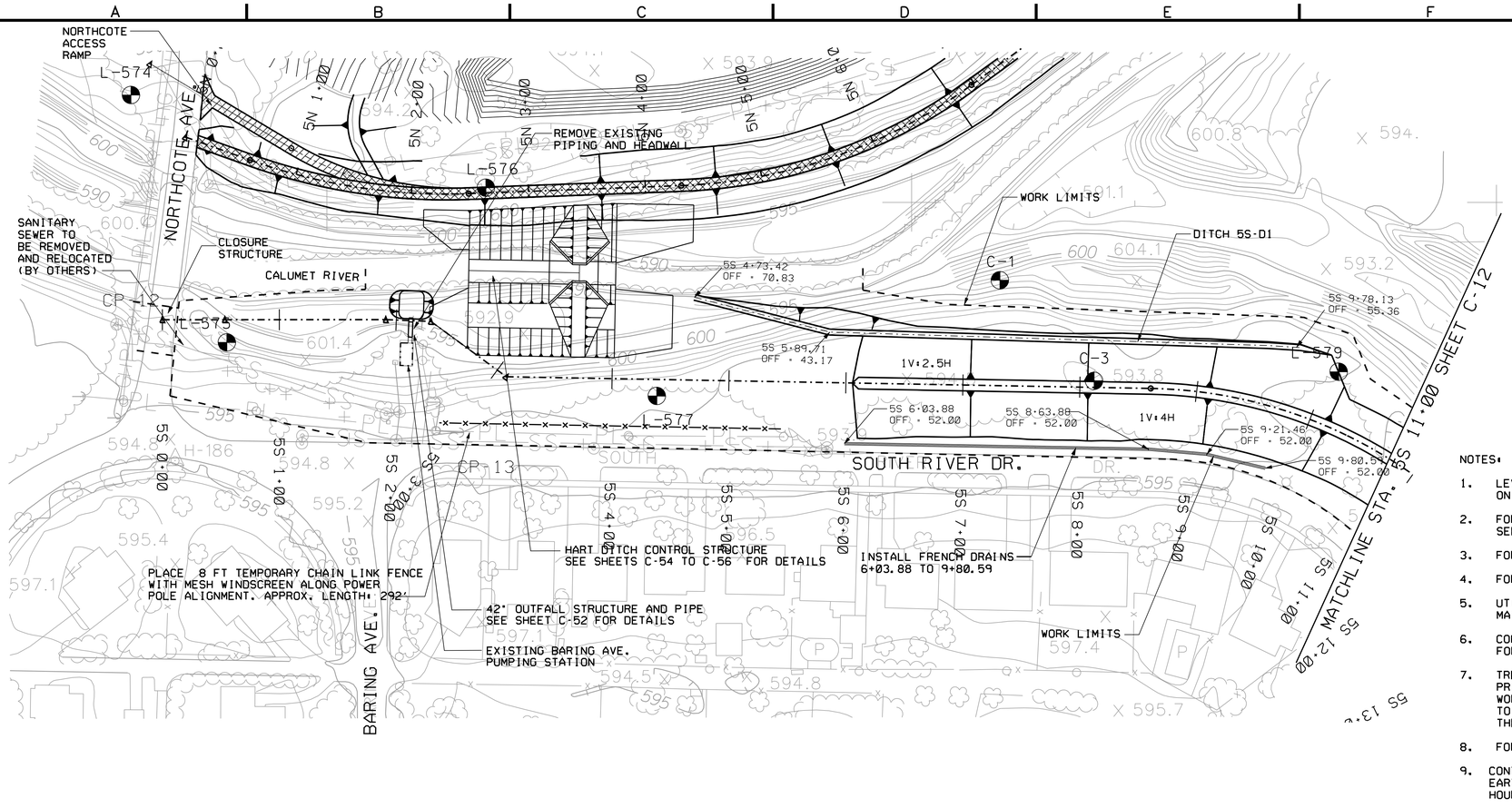

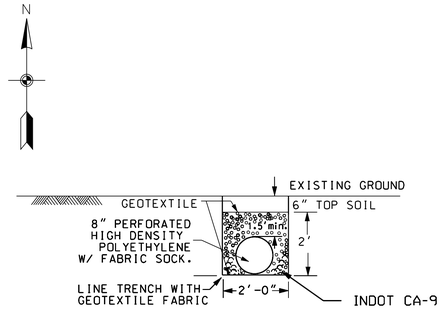

FRENCH DRAIN DETAIL

NOTES:

1. LEVEE AND FLOODWALL CONTROL POINTS ARE LISTED ON WORK LIMITS SHEET C-01.
2. FOR SYMBOLS, ABBREVIATIONS, AND GENERAL NOTES SEE SHEETS G-03 AND G-04.
3. FOR LEVEE TYPICAL SECTIONS SEE SHEET C-42.
4. FOR FLOODWALL DETAILS AND PROFILE SEE SHEETS S-01, S-02, S-03, S-07, AND S-09.
5. UTILITY SERVICE TO BARING AVE PUMPING STATION SHALL BE MAINTAINED DURING CONSTRUCTION.
6. CONTRACTOR SHALL PROTECT AND PROVIDE TEMPORARY SUPPORT FOR UTILITY POLES DURING CONSTRUCTION.
7. TREE REMOVAL SHALL BE LIMITED TO WITHIN 15 FT OF LEVEE\WALL FOOTPRINT. PRIOR APPROVAL IS REQUIRED FOR ALL OTHER TREE REMOVAL WITHIN THE WORKLIMITS OF 5S ALIGNMENT. TREES WITHIN THE WORK LIMITS THAT ARE NOT TO BE REMOVED SHALL HAVE TEMPORARY PROJECT SAFETY FENCING PLACED AROUND THE DRIP LINE OF THE TREES.
8. FOR CROSS SECTIONS SEE SHEET C-26.
9. CONTRACTOR SHALL NOT STORE ANY EQUIPMENT OR STOCKPILE MATERIALS, OTHER THAN EARTH OR ROCK FILL WITHIN THE WORKLIMITS OF 5S 0+00 TO 5S 35+00, BEYOND 24 HOURS, WITHOUT PRIOR APPROVAL FROM THE CONTRACTING OFFICER.

50 0 50 100
1 INCH = 50 FEET

PLAN

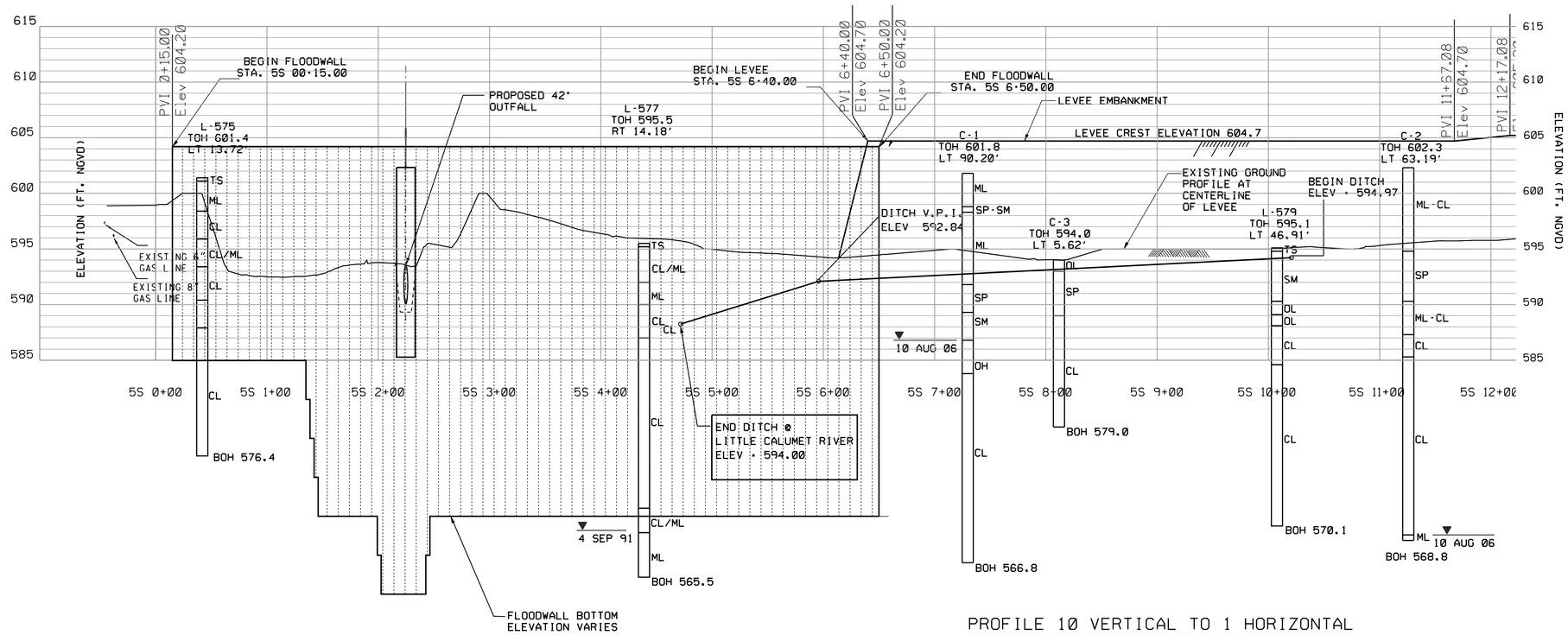

PROFILE 10 VERTICAL TO 1 HORIZONTAL

US Army Corps of Engineers Chicago District

SYMBOL	AMENDMENT DESCRIPTION	DATE APPROVED	SYMBOL	DESCRIPTION	DATE APPROVED

DESIGNED BY: JAG
DATE: AUG 2007
DRAWN BY: DB
SCALE: AS SHOWN
CHECKED BY: WK
SOLICITATION NUMBER: W912P6-07-B-0006
SUBMITTED BY: JOHN GROBOSKI
DATE:

U.S. ARMY ENGINEER DISTRICT
CORPS OF ENGINEERS
CHICAGO, ILLINOIS

LITTLE CALUMET RIVER, INDIANA
LOCAL FLOOD PROTECTION
STAGE V, PHASE 2 - LEVEE

PLAN AND PROFILE
STA. 5S 0+00 TO STA. 5S 11+00

SHEET REFERENCE NUMBER:
C-11
SHEET 15 OF 138

PLOT DATE: 8/3/2007
FILENAME: D:\working\dms10534\C5SC11DGN

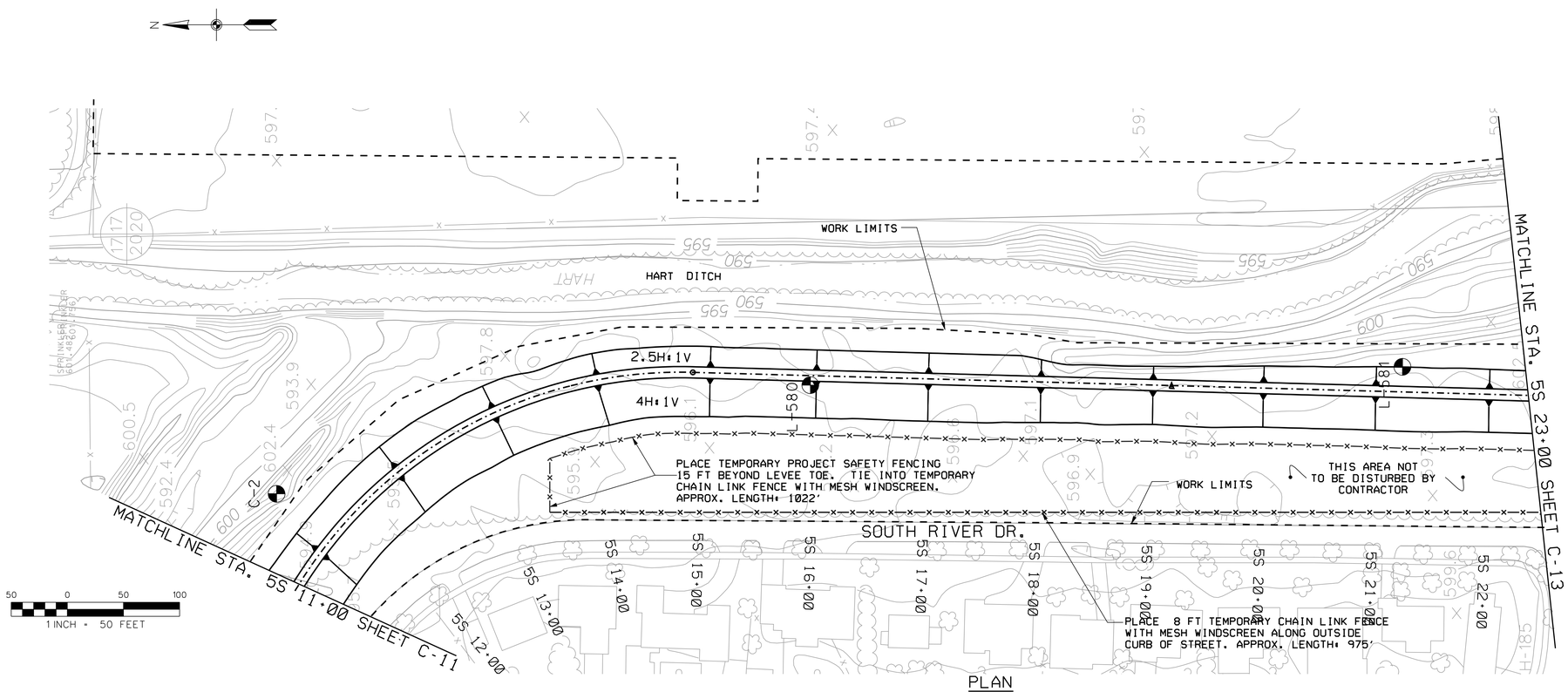

PLAN

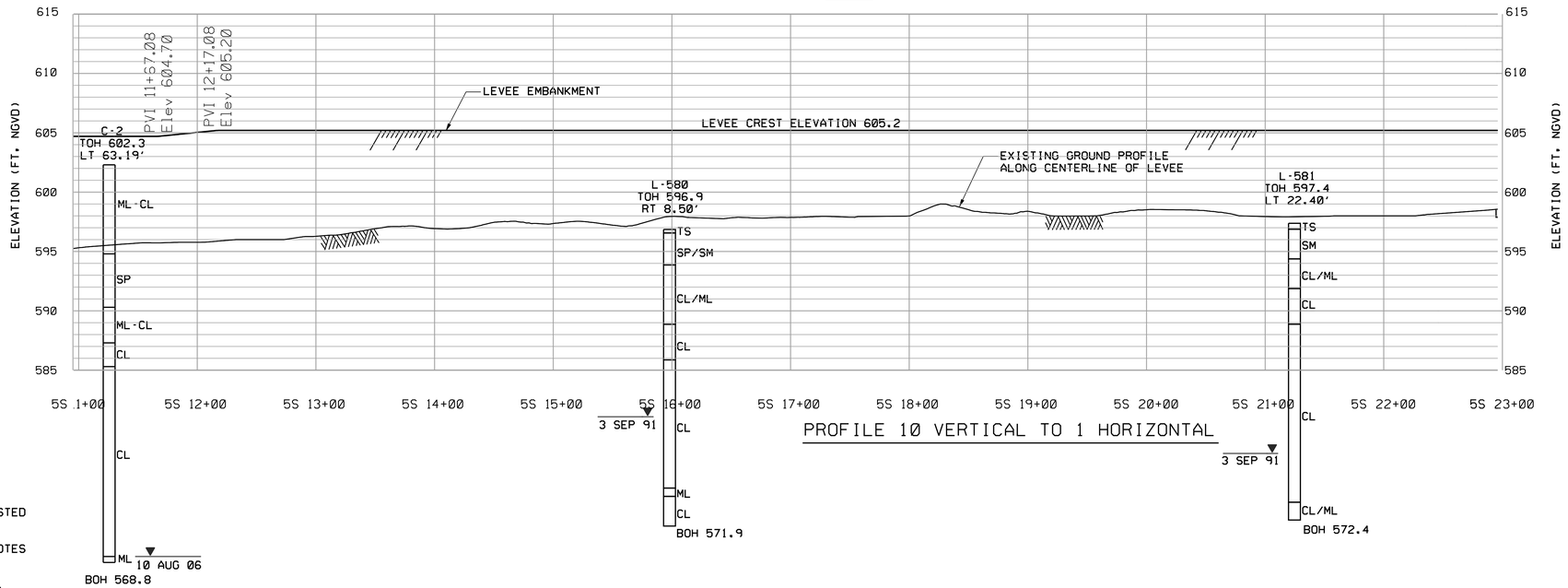

PROFILE 10 VERTICAL TO 1 HORIZONTAL

NOTES:

1. LEVEE AND FLOODWALL CONTROL POINTS ARE LISTED ON WORK LIMITS SHEETS C-01 AND C-02.
2. FOR SYMBOLS, ABBREVIATIONS, AND GENERAL NOTES SEE SHEETS G-03 AND G-04.
3. FOR LEVEE TYPICAL SECTIONS SEE SHEET C-42.
4. CONTRACTOR SHALL PROTECT AND PROVIDE TEMPORARY SUPPORT FOR UTILITY POLES DURING CONSTRUCTION.
5. TREE REMOVAL SHALL BE LIMITED TO WITHIN 15 FT OF LEVEE\WALL FOOTPRINT. PRIOR APPROVAL IS REQUIRED FOR ALL OTHER TREE REMOVAL WITHIN THE WORKLIMITS OF 5S ALIGNMENT. TREES WITHIN THE WORK LIMITS THAT ARE NOT TO BE REMOVED SHALL HAVE TEMPORARY PROJECT SAFETY FENCING PLACED AROUND THE DRIP LINE OF THE TREES.
6. FOR CROSS SECTIONS SEE SHEET C-26 AND C-27

US Army Corps of Engineers
Chicago District

SYMBOL	AMENDMENT DESCRIPTION	DATE APPROVED	SYMBOL	DESCRIPTION	DATE APPROVED

DESIGNED BY: JAG
DATE: AUG 2007
DRAWN BY: DB
SCALE: AS SHOWN
CHECKED BY: WK
SOLICITATION NUMBER: W912P6-07-B-0006
SUBMITTED BY: JOHN GROBOSKI
DATE:

U.S. ARMY ENGINEER DISTRICT
CORPS OF ENGINEERS
CHICAGO, ILLINOIS

LITTLE CALUMET RIVER, INDIANA
LOCAL FLOOD PROTECTION
STAGE V, PHASE 2 - LEVEE

PLAN AND PROFILE
STA. 5S 11+00 TO STA. 5S 23+00

SHEET REFERENCE NUMBER:
C-12
SHEET 16 OF 138

PLOT DATE: 8/31/2007
FILENAME: D:\working\sma10534\C55C12.DGN

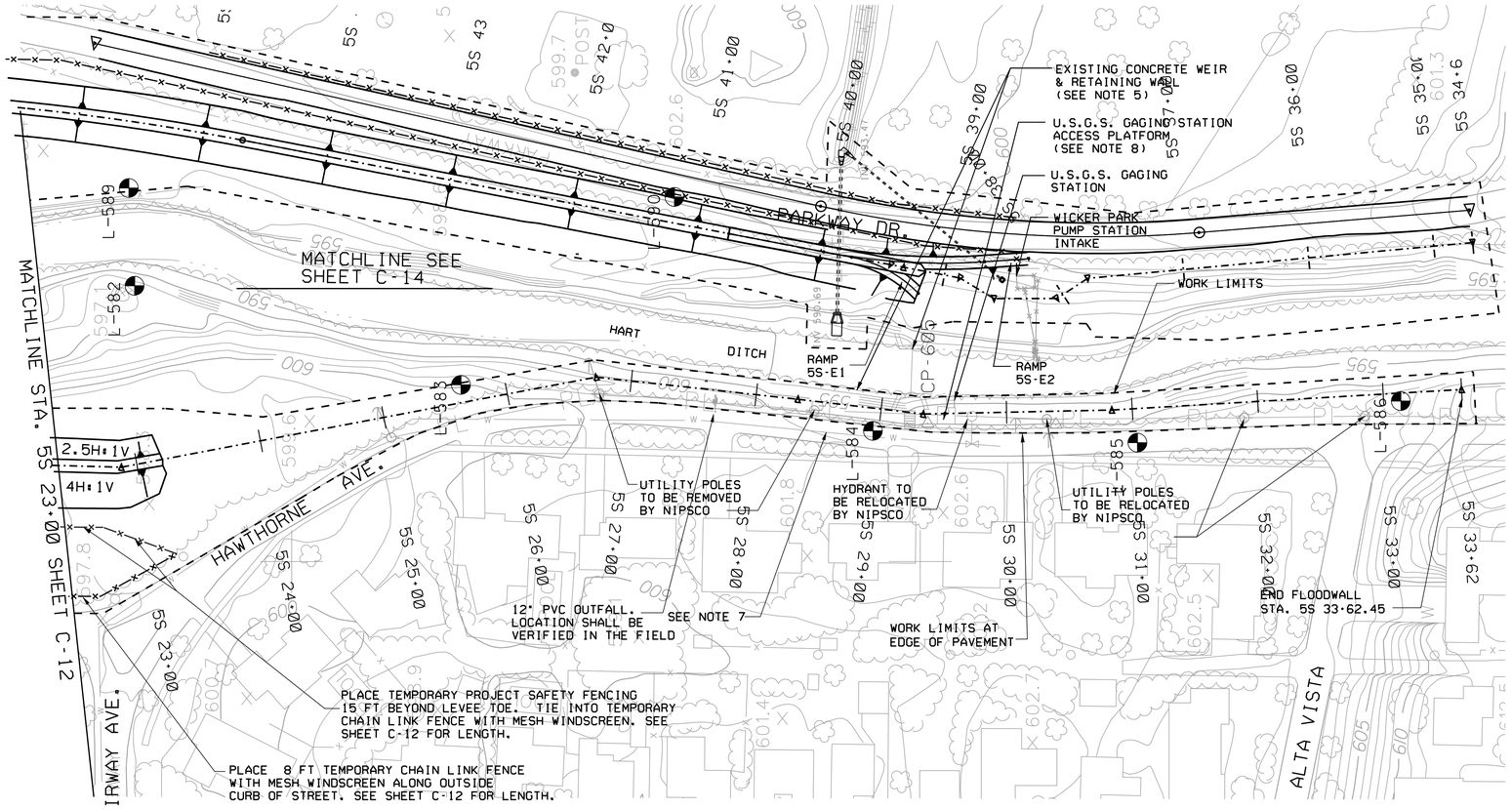

PLAN

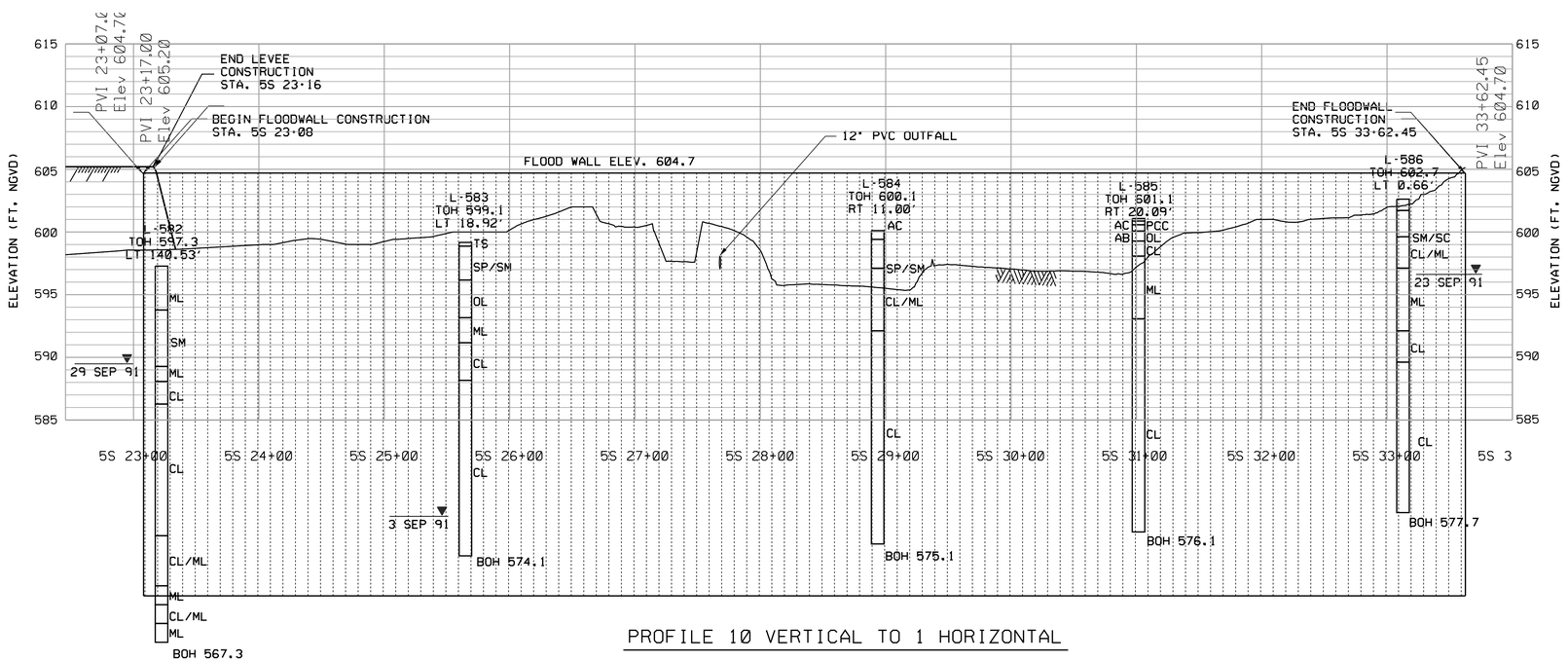

PROFILE 10 VERTICAL TO 1 HORIZONTAL

NOTES:

1. LEVEE AND I-WALL CONTROL POINTS ARE LISTED ON WORK LIMITS SHEET C-02.
2. FOR SYMBOLS, ABBREVIATIONS, AND GENERAL NOTES SEE SHEETS G-03 AND G-04.
3. FOR LEVEE TYPICAL SECTIONS SEE SHEETS C-42.
4. FOR I-WALL DETAILS AND PROFILE SEE SHEETS S-04, S-05, S-06, S-07, AND S-09
5. THE EXISTING CONCRETE WEIR AND RETAINING WALL WERE LOCATED FROM DATA RECEIVED FROM OTHERS AND IS BELIEVED TO BE ACCURATE. CONTRACTOR SHALL DETERMINE THE EXACT LOCATION AND NOTIFY THE CONTRACTING OFFICER OF ANY POTENTIAL IMPACTS TO THE FLOODWALL IN THIS AREA.
6. UTILITY SERVICE TO WICKER PARK PUMP STATION SHALL BE MAINTAINED DURING CONSTRUCTION..
7. CONTRACTOR SHALL CONTACT THE TOWN OF MUNSTER AT (219)836-8810 72 HOURS PRIOR TO ANY CONSTRUCTION OF THE I-WALLS SO THAT THE WATERLINE MAY BE TEMPORARILY OUT OF SERVICE. THE LOCATION OF THE 12" WATERLINE SHALL BE VERIFIED IN THE FIELD. TOWN OF MUNSTER STATED THAT THE WATERLINE IS APPROX. 1 FT EAST OF HAWTHORN AVE CURB, WHERE AS THE EXISTING TOPOGRAPHIC DISPLAYS IT MORE IN THE CENTER OF THE ROAD.
8. FOR U.S.G.S. GAGING STATION ACCESS PLATFORM DETAILS SEE SHEET S-08.
9. TREE REMOVAL SHALL BE LIMITED TO WITHIN 15 FT OF LEVEE\WALL FOOTPRINT. PRIOR APPROVAL IS REQUIRED FOR ALL OTHER TREE REMOVAL WITHIN THE WORKLIMITS OF 5S ALIGNMENT. TREES WITHIN THE WORK LIMITS THAT ARE NOT TO BE REMOVED SHALL HAVE TEMPORARY PROJECT SAFETY FENCING PLACED AROUND THE DRIP LINE OF THE TREES.
10. FOR CROSS SECTIONS SEE SHEETS C-27 AND C-28
11. CONTACT FRANK JANOSI FROM NIPSCO, FOR UTILITY CONCERNS OF OVERHEAD POWERLINES. SEE SHEET G-04 FOR CONTACT INFORMATION.

US Army Corps of Engineers
Chicago District

SYMBOL	AMENDMENT DESCRIPTION	DATE APPROVED	SYMBOL	DESCRIPTION	DATE APPROVED

DESIGNED BY: JAG
DATE: AUG 2007
DRAWN BY: DB
SCALE: AS SHOWN
CHECKED BY: WK
SOLICITATION NUMBER: W912P6-07-B-0006
SUBMITTED BY: JOHN GROBOSKI
DATE:

U.S. ARMY ENGINEER DISTRICT
CORPS OF ENGINEERS
CHICAGO, ILLINOIS

LITTLE CALUMET RIVER, INDIANA
LOCAL FLOOD PROTECTION
STAGE V, PHASE 2 - LEVEE

PLAN AND PROFILE
STA. 5S 23+00 TO STA. 5S 33+62

SHEET REFERENCE NUMBER:
C-13

SHEET 17 OF 138

PLOT DATE: 8/3/2007
FILENAME: D:\working\dms\0534\LCS5C13.DGN

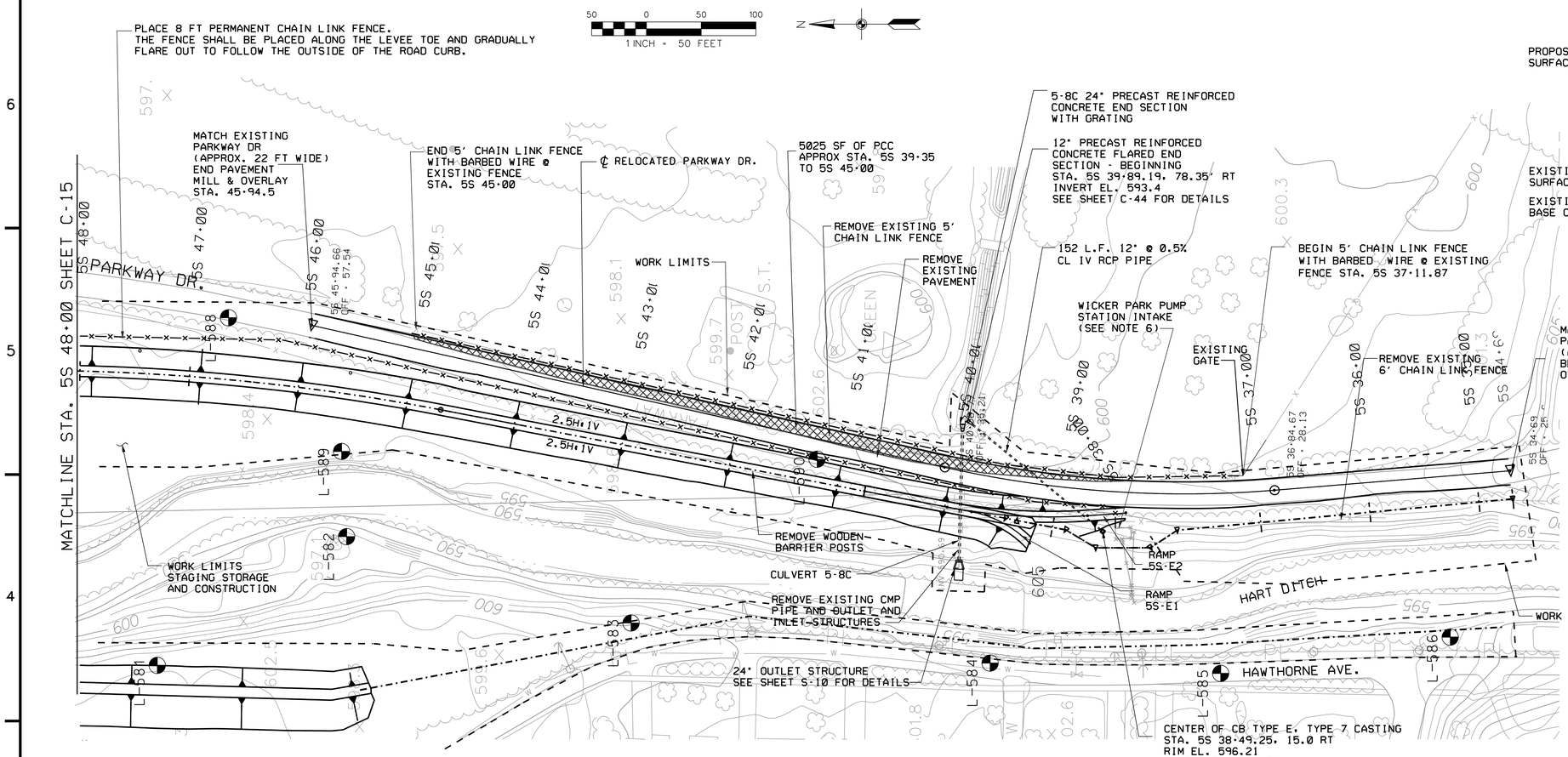

PLAN

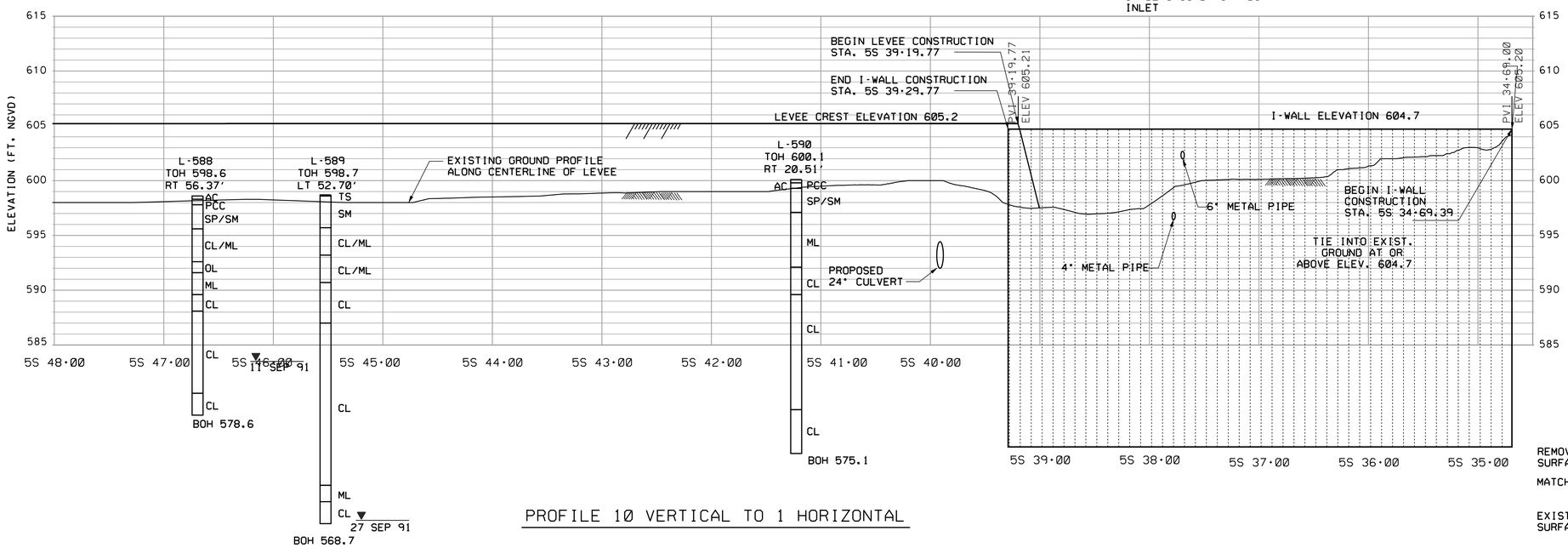

PROFILE 10 VERTICAL TO 1 HORIZONTAL

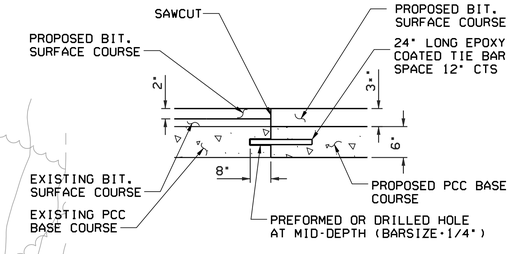

LONGITUDINAL CONSTRUCTION JOINT GROUTED-IN-PLACE TIE BAR DETAIL

NOTES:

1. LEVEE, I-WALL, RECREATION TRAIL, AND RELOCATED PARKWAY DR. CONTROL POINTS ARE LISTED ON WORK LIMITS SHEET C-03.
2. FOR SYMBOLS, ABBREVIATIONS, AND GENERAL NOTES SEE SHEETS G-03 AND G-04.
3. FOR LEVEE TYPICAL SECTIONS SEE SHEET C-42.
4. FOR I-WALL DETAILS AND PROFILE SHEET S-08
5. SEE INDIANA DEPARTMENT OF TRANSPORTATION STANDARDS FOR CATCH BASIN AND CASTING DETAILS.
6. UTILITY SERVICE TO WICKER PARK PUMP STATION SHALL BE MAINTAINED DURING CONSTRUCTION OF I-WALL.
7. CONTRACTOR SHALL SAWCUT EXISTING PARKWAY DR. PAVEMENT 6' LEFT OF THE PROPOSED CENTERLINE FOR RELOCATED PARKWAY DR. AND AS SHOWN IN TRANSITION.
8. CONTRACTOR SHALL CONSTRUCT 6" PORTLAND CEMENT CONCRETE BASE COURSE WITH 3" BITUMINOUS SURFACE COURSE TO OBTAIN A MINIMUM 6' OF PAVEMENT RIGHT OF THE PROPOSED RELOCATED PARKWAY DR. CENTERLINE.
9. FOR RELOCATED PARKWAY DR. SEE CROSS SECTIONS ON SHEET C-29. FOR TYPICAL DETAILS SEE THIS SHEET.
10. USE BUTT JOINT TO MATCH EXISTING PARKWAY DR., SEE BUTT JOINT DETAIL THIS SHEET.
11. USE LONGITUDINAL CONSTRUCTION JOINT, GROUTED-IN-PLACE TIE BAR, SEE DETAIL THIS SHEET.
12. CAST NEW 6" PIPE INTO NEW I-WALL AND WRAP PIPE WITH HYDROPHILIC WATER STOP.
13. TREE REMOVAL SHALL BE LIMITED TO WITHIN 15 FT OF LEVEE-WALL FOOTPRINT. PRIOR APPROVAL IS REQUIRED FOR ALL OTHER TREE REMOVAL WITHIN THE WORKLIMITS OF 5S ALIGNMENT.
14. FOR CROSS SECTIONS SEE SHEETS C-29 AND C-30.

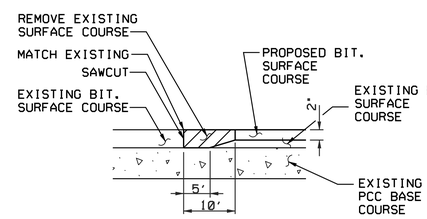

BUTT JOINT DETAIL

US Army Corps of Engineers Chicago District

SYMBOL	AMENDMENT DESCRIPTION	DATE APPROVED	SYMBOL	DESCRIPTION	DATE APPROVED

DESIGNED BY: JAG | DATE: AUG 2007
DRAWN BY: DB | SCALE: AS SHOWN
CHECKED BY: WK | SOLICITATION NUMBER: W912P6-07-B-0006
SUBMITTED BY: JOHN GROBOSKI | DATE:

U.S. ARMY ENGINEER DISTRICT CORPS OF ENGINEERS CHICAGO, ILLINOIS

LITTLE CALUMET RIVER, INDIANA LOCAL FLOOD PROTECTION STAGE V, PHASE 2 - LEVEE

PLAN AND PROFILE STA. 5S 34+69 TO STA. 5S 48+00

SHEET REFERENCE NUMBER: C-14

SHEET 18 OF 138

PLOT DATE: 8/3/2007
FILENAME: D:\working\dms10534\LCS5C14.DGN

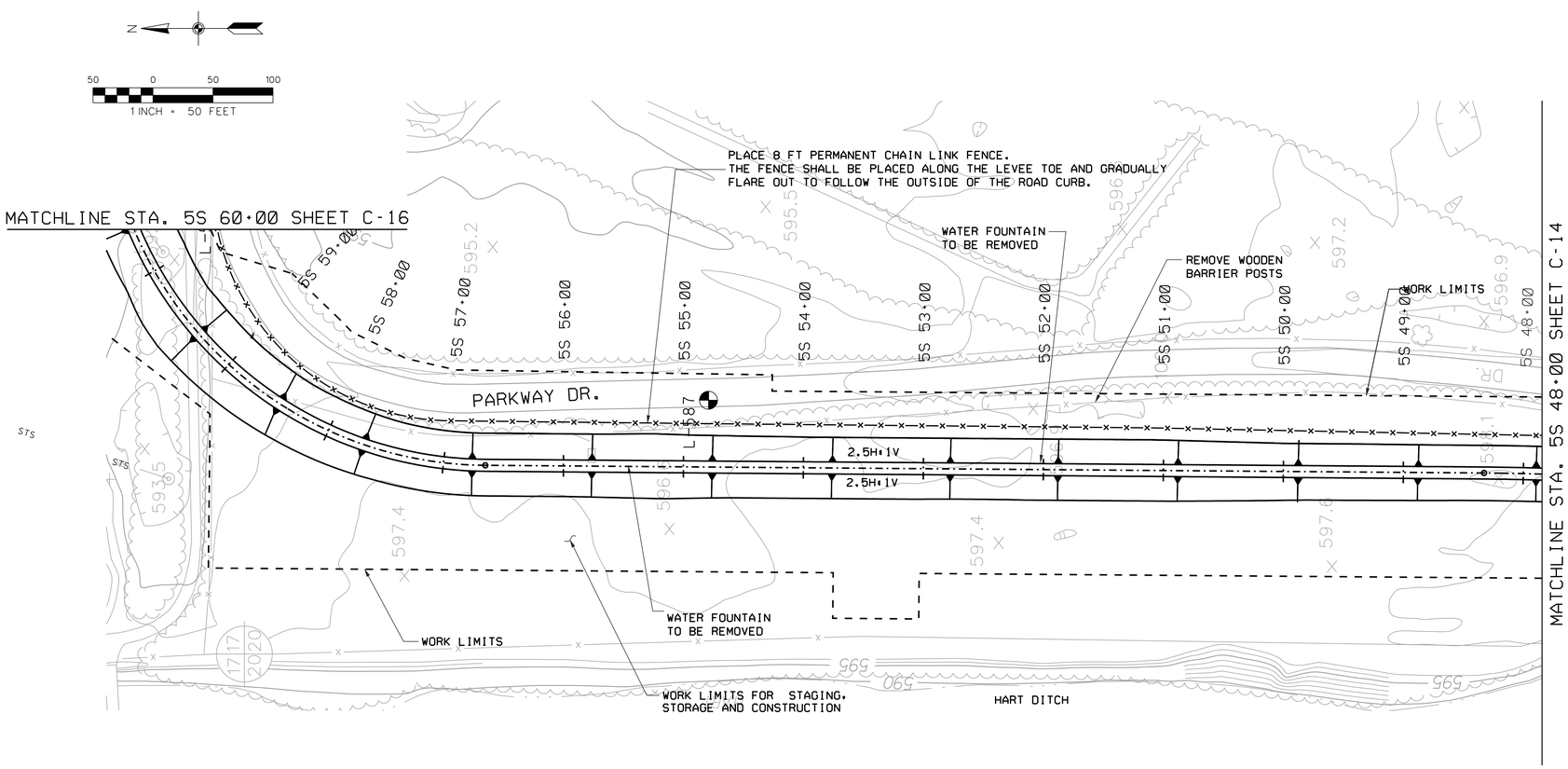

PLAN

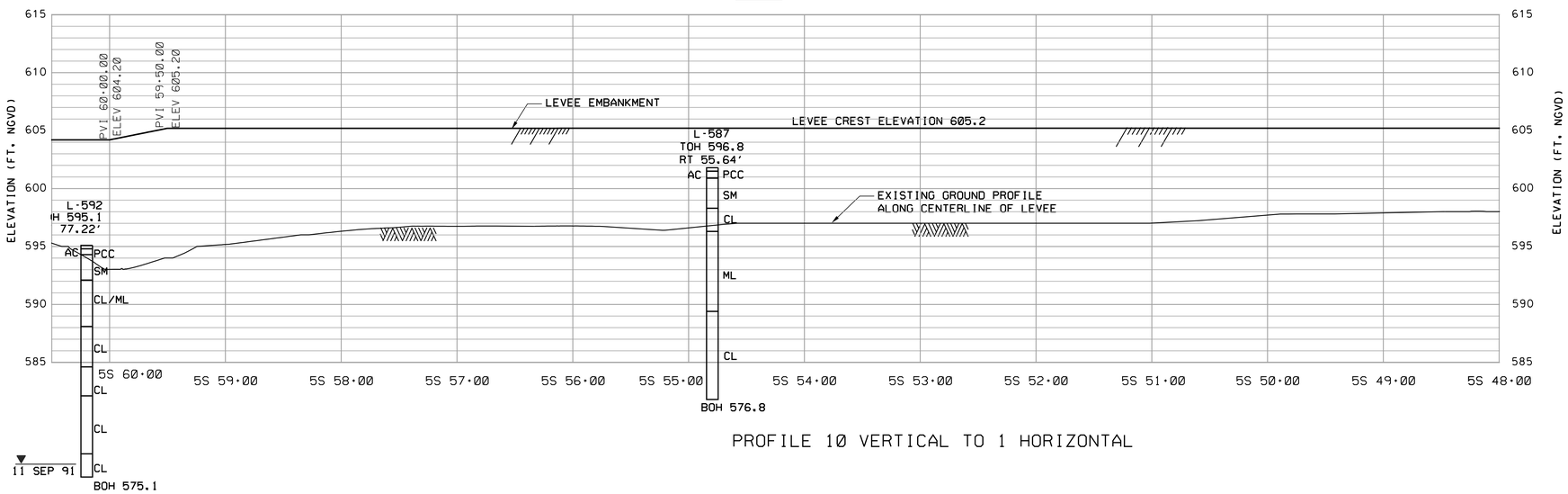

PROFILE 10 VERTICAL TO 1 HORIZONTAL

NOTES:

1. LEVEE AND I-WALL CONTROL POINTS ARE LISTED ON WORK LIMITS SHEET C-03.
2. FOR SYMBOLS, ABBREVIATIONS, AND GENERAL NOTES SEE SHEETS G-03 AND G-04.
3. FOR LEVEE TYPICAL SECTIONS SEE SHEET C-42.
4. CONTRACTOR SHALL FIELD LOCATE, CUT, AND CAP EXISTING WATER SERVICE LINE. THE LINE SHALL BE REMOVED WITHIN WORKLIMTS.
5. TREE REMOVAL SHALL BE LIMITED TO WITHIN 15 FT OF LEVEE FOOTPRINT. PRIOR APPROVAL IS REQUIRED FOR ALL OTHER TREE REMOVAL WITHIN THE WORKLIMITS OF 5S ALIGNMENT.
6. FOR CROSS SECTIONS SEE SHEETS C-30 AND C-31.
7. REFER TO SUBPART, "MAINTAINING FLOOD PROTECTION AND DRAINAGE DURING CONSTRUCTION SECTION" CONTAINED IN SECTION 31 00 00 "EARTHWORK" FOR GAP IN LEVEE DURING CONSTRUCTION.

US Army Corps of Engineers
Chicago District

SYMBOL	AMENDMENT DESCRIPTION	DATE APPROVED	SYMBOL	DESCRIPTION	DATE APPROVED

DESIGNED BY: JAG
DATE: AUG 2007
DRAWN BY: DB
SCALE: AS SHOWN
CHECKED BY: WK
SOLICITATION NUMBER: W912P6-07-B-0006
SUBMITTED BY: JOHN GROBOSKI
DATE:

U.S. ARMY ENGINEER DISTRICT
CORPS OF ENGINEERS
CHICAGO, ILLINOIS

LITTLE CALUMET RIVER, INDIANA
LOCAL FLOOD PROTECTION
STAGE V, PHASE 2 - LEVEE

PLAN AND PROFILE
STA. 5S 48+00 TO STA. 5S 60+00

SHEET REFERENCE NUMBER:
C-15
SHEET 19 OF 138

PLOT DATE: 8/3/2007
FILENAME: D:\working\dms10534\LCS5C15.DGN

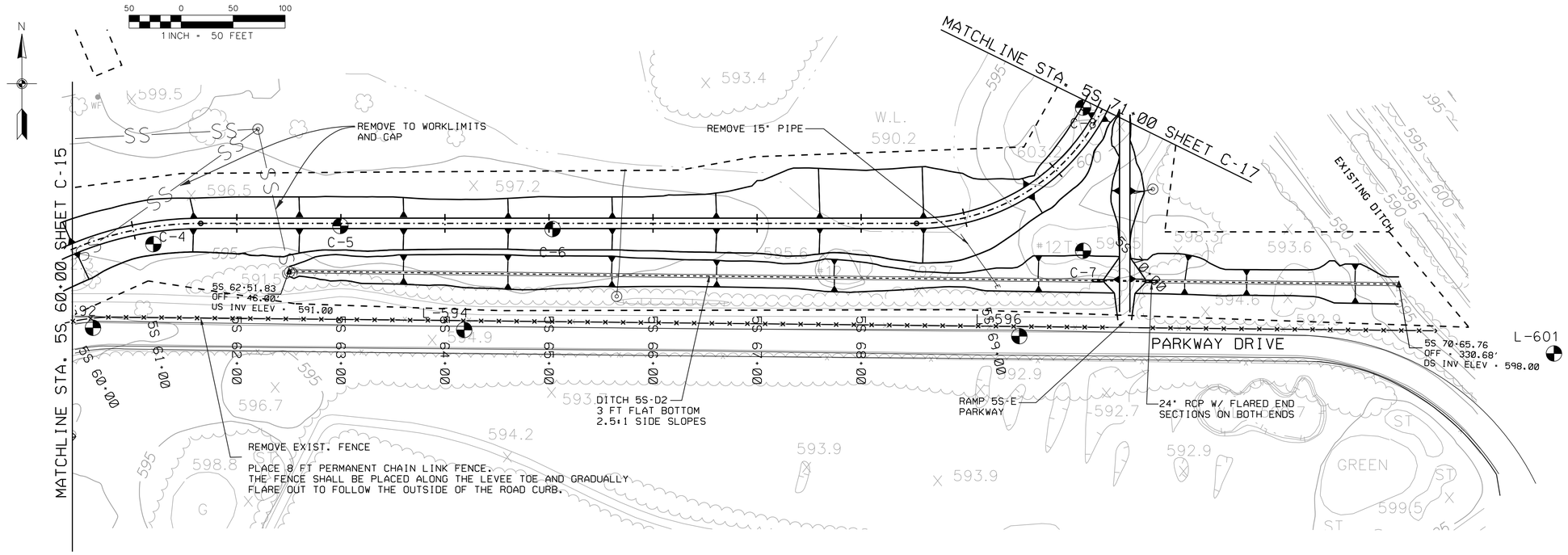

PLAN

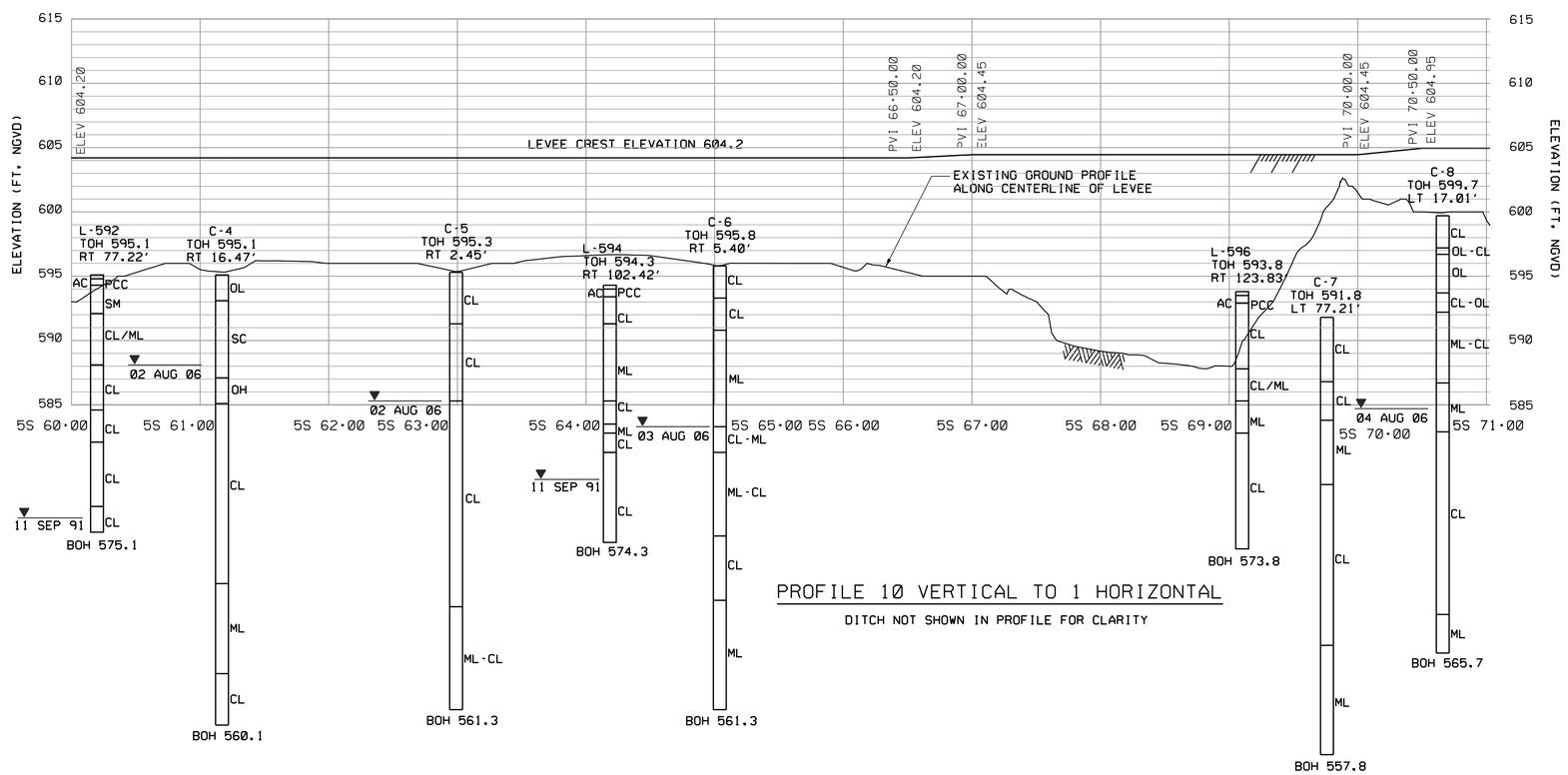

PROFILE 10 VERTICAL TO 1 HORIZONTAL

DITCH NOT SHOWN IN PROFILE FOR CLARITY

NOTES:

1. LEVEE AND FLOODWALL CONTROL POINTS ARE LISTED ON WORK LIMITS SHEET C-04.
2. FOR SYMBOLS, ABBREVIATIONS, AND GENERAL NOTES SEE SHEETS G-03 AND G-04.
3. FOR LEVEE TYPICAL SECTIONS SEE SHEETS C-42.
4. FOR RECREATION TRAIL DETAILS AND TYPICAL SECTION SEE SHEETS R-07.
5. TREE REMOVAL SHALL BE LIMITED TO WITHIN 15 FT OF LEVEE FOOTPRINT. PRIOR APPROVAL IS REQUIRED FOR ALL OTHER TREES REMOVAL WITHIN THE WORKLIMITS OF 5S ALIGNMENT.
6. CONTRACTOR SHALL FIELD LOCATE, CUT AND CAP EXIST. SPRINKLER CONDUIT. THE CONDUIT SHALL BE REMOVED WITHIN THE WORKLIMITS.
7. FOR CROSS SECTIONS SEE SHEET C-31 AND C-32.
8. REFER TO SUBPART, "MAINTAINING FLOOD PROTECTION AND DRAINAGE DURING CONSTRUCTION SECTION" CONTAINED IN SECTION 31 00 00 "EARTHWORK" FOR GAP IN LEVEE DURING CONSTRUCTION.
9. FOR ACCESS RAMP SEE SHEET C-59.
10. POTENTIAL CLAY SOURCE OF UNKNOW QUANTITY AND QUALITITY IS LOCATED NEAR PROJECT LIMITS. CONTRACTOR SHALL COORDINATE WITH DENNIS SIMALA FROM THE NORTH TOWNSHIP. SEE SHEET G-04 FOR CONTACT INFORMATION. IF USED, CONTRACTOR SHALL SUBMIT TEST RESULTS AS SPECIFIED IN THE EARTHWORK SECTION OF THE SPECIFCATION.
11. SEE SHEET C-53 FOR ACCESS TO THE LEVEE FOR 5S 35+00 TO 5S 75+00. ACCESS SHALL BE COORDINATED WITH DENNIS SIMALA.

US Army Corps of Engineers
Chicago District

SYMBOL	AMENDMENT DESCRIPTION	DATE APPROVED	SYMBOL	DESCRIPTION	DATE APPROVED

DESIGNED BY: JAG
DATE: AUG 2007
DRAWN BY: DB
SCALE: AS SHOWN
CHECKED BY: WK
SOLICITATION NUMBER: W912P6-07-B-0006
SUBMITTED BY: JOHN GROBOSKI
DATE:

U.S. ARMY ENGINEER DISTRICT
CORPS OF ENGINEERS
CHICAGO, ILLINOIS

LITTLE CALUMET RIVER, INDIANA
LOCAL FLOOD PROTECTION
STAGE V, PHASE 2 - LEVEE

PLAN AND PROFILE
STA. 5S 60+00 TO STA. 5S 71+00

SHEET REFERENCE NUMBER:
C-16

PLOT DATE: 8/6/2007
FILENAME: D:\working\sms10534\LCS5C16.DGN

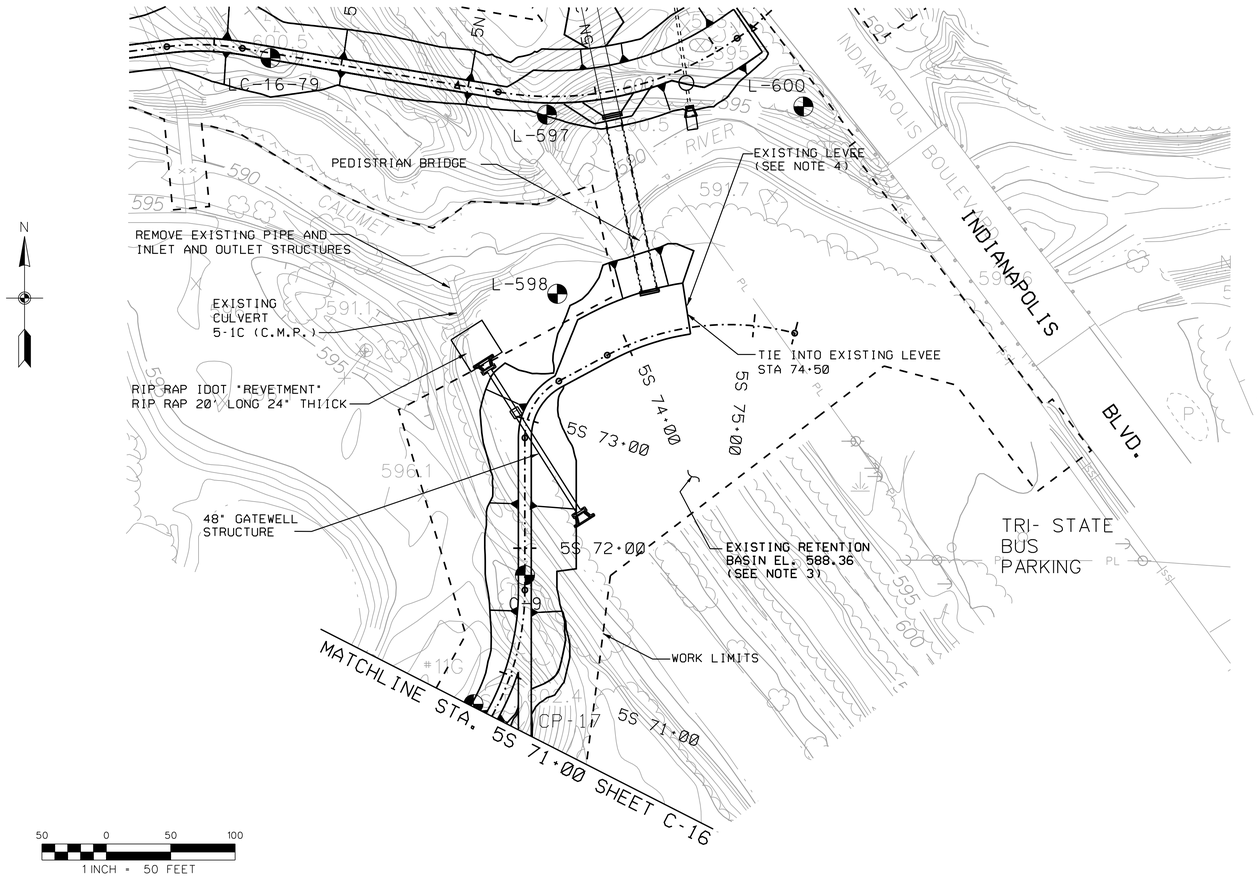

PLAN

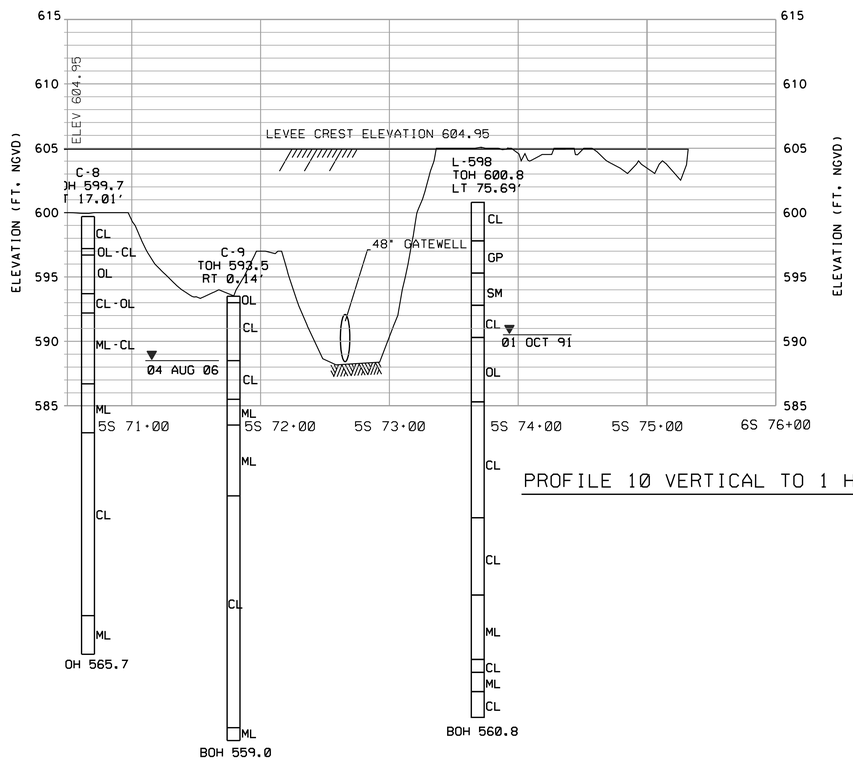

PROFILE 10 VERTICAL TO 1 HORIZONTAL

NOTES:

1. LEVEE AND I-WALL CONTROL POINTS ARE LISTED ON WORK LIMITS SHEET C-04.
2. FOR SYMBOLS, ABBREVIATIONS, AND GENERAL NOTES SEE SHEETS G-03 AND G-04.
3. THE EXISTING LEVEE AND RETENTION BASIN ARE SHOWN ACCORDING TO EXISTING PLANS. THE CONTRACTOR SHALL FIELD VERIFY THEIR LOCATIONS PRIOR TO CONSTRUCTION OF THE PROPOSED LEVEE.
4. TOPSOIL SHALL BE STRIPPED IN THE AREA THAT THE EXISTING LEVEE MEETS THE PROPOSED LEVEE. COMPACTED IMPERVIOUS FILL SHALL BE ADDED TO THE SAME PROTECTION ELEVATION OF THE PROPOSED LEVEE.
5. FOR LEVEE TYPICAL SECTIONS SEE SHEET C-42.
6. TREE REMOVAL SHALL BE LIMITED TO WITHIN 15 FT OF LEVEE FOOTPRINT. PRIOR APPROVAL IS REQUIRED FOR ALL OTHER TREE REMOVAL WITHIN THE WORKLIMITS OF 5S ALIGNMENT.
7. FOR CROSS SECTIONS SEE SHEET C-32.
8. FOR 48" GATEWELL STRUCTURE SEE C-49.

US Army Corps of Engineers
Chicago District

SYMBOL	AMENDMENT DESCRIPTION	DATE APPROVED	SYMBOL	DESCRIPTION	DATE APPROVED

DESIGNED BY: JAG
DATE: AUG 2007
DRAWN BY: DB
SCALE: AS SHOWN
CHECKED BY: WK
SOLICITATION NUMBER: W912P6-07-B-0006
SUBMITTED BY: JOHN GROBOSKI
DATE:

U.S. ARMY ENGINEER DISTRICT
CORPS OF ENGINEERS
CHICAGO, ILLINOIS

LITTLE CALUMET RIVER, INDIANA
LOCAL FLOOD PROTECTION
STAGE V, PHASE 2 - LEVEE

PLAN AND PROFILE
STA. 5S 71+00 TO STA. 5S 75+32

SHEET REFERENCE NUMBER:
C-17
SHEET 21 OF 138

PLOT DATE: 8/6/2007
FILENAME: D:\working\dms10534\LCS5C17.DGN

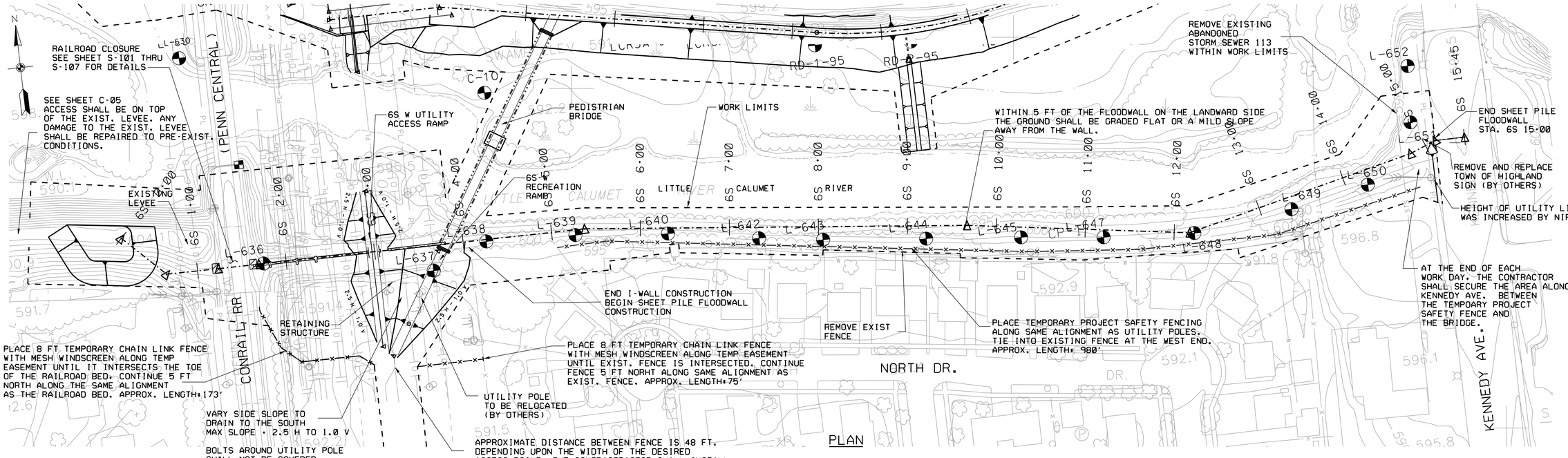

PLAN

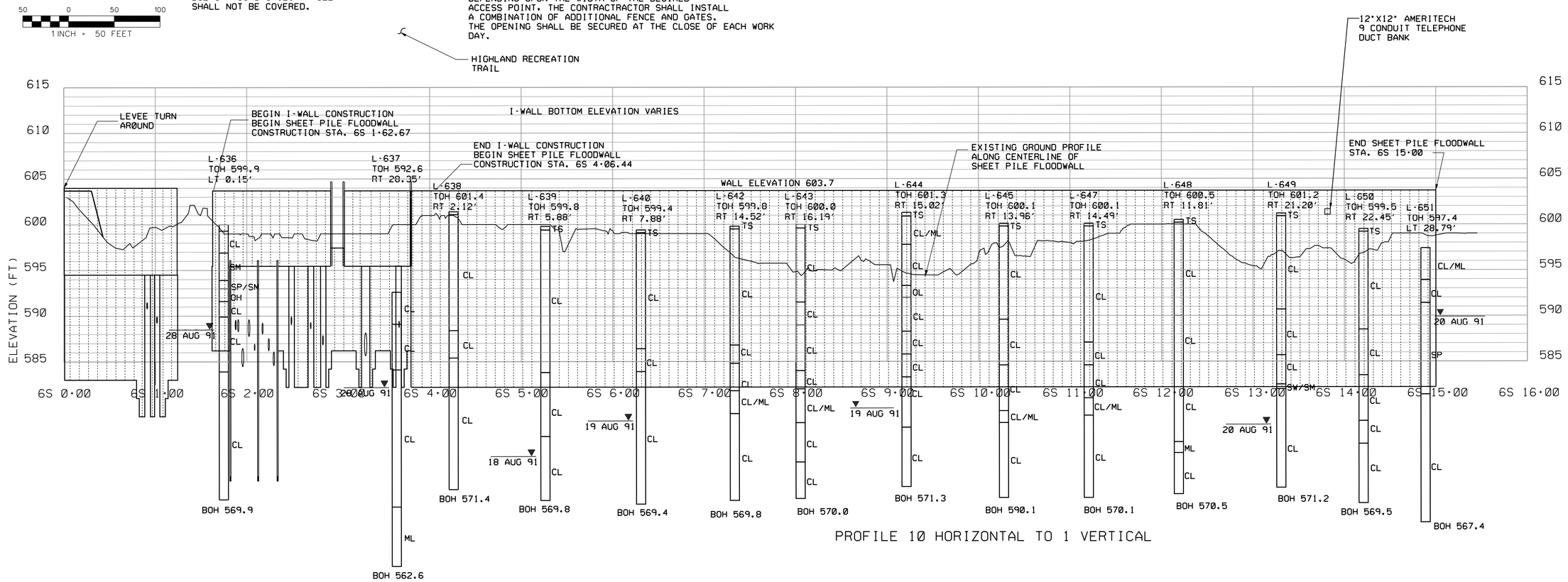

PROFILE 10 HORIZONTAL TO 1 VERTICAL

NOTES:

1. FOR WORK LIMITS SEE SHEET C-05.
2. FOR SYMBOLS, ABBREVIATIONS, AND GENERAL NOTES SEE SHEETS G-03 AND G-04.
3. FOR SHEET PILE FLOODWALL DETAILS AND PROFILE SEE SHEETS S-09.
4. FOR TYPICAL SECTIONS SEE SHEETS C-42.
5. FOR I-WALL DETAILS AND PROFILE SEE SHEETS S-13, S-14, AND S-15.
6. FOR UTILITY AND RECREATIONAL RAMP TYPICAL SECTIONS, DETAILS, AND PLAN AND PROFILE SEE SHEETS C-59.
7. CONTRACTOR SHALL REPAIR ANY DAMAGES TO THE HIGHLAND RECREATION TRAIL THAT OCCUR DURING THE CONSTRUCTION OF THE ACCESS ROADS AND WALLS.
8. FOR CROSS SECTIONS SEE SHEET C-33 AND C-34.
9. CONTRACTOR SHALL NOT STORE ANY EQUIPMENT OR STOCKPILE MATERIALS, OTHER THAN EARTH OR ROCK FILL WITHIN THE WORKLIMITS OF 6S 5+00 TO 6S 14+00, BEYOND 24 HOURS, WITHOUT PRIOR APPROVAL FROM THE CONTRACTING OFFICER.

US Army Corps of Engineers Chicago District

SYMBOL	AMENDMENT DESCRIPTION	DATE APPROVED	SYMBOL	DESCRIPTION	DATE APPROVED

DESIGNED BY: JAG | DATE: AUG 2007
DRAWN BY: DB | SCALE: AS SHOWN
CHECKED BY: WK | SOLICITATION NUMBER: W912P6-07-B-0006
SUBMITTED BY: JOHN GROBOSKI | DATE:

U.S. ARMY ENGINEER DISTRICT
CORPS OF ENGINEERS
CHICAGO, ILLINOIS

LITTLE CALUMET RIVER, INDIANA
LOCAL FLOOD PROTECTION
STAGE V, PHASE 2 - LEVEE

PLAN AND PROFILE
STA. 6S 0+00 TO STA. 6S 15+45

SHEET REFERENCE NUMBER:
C-18
SHEET 22 OF 138

PLOT DATE: 8/3/2007
FILENAME: D:\working\dms10534\CS5C18.DGN

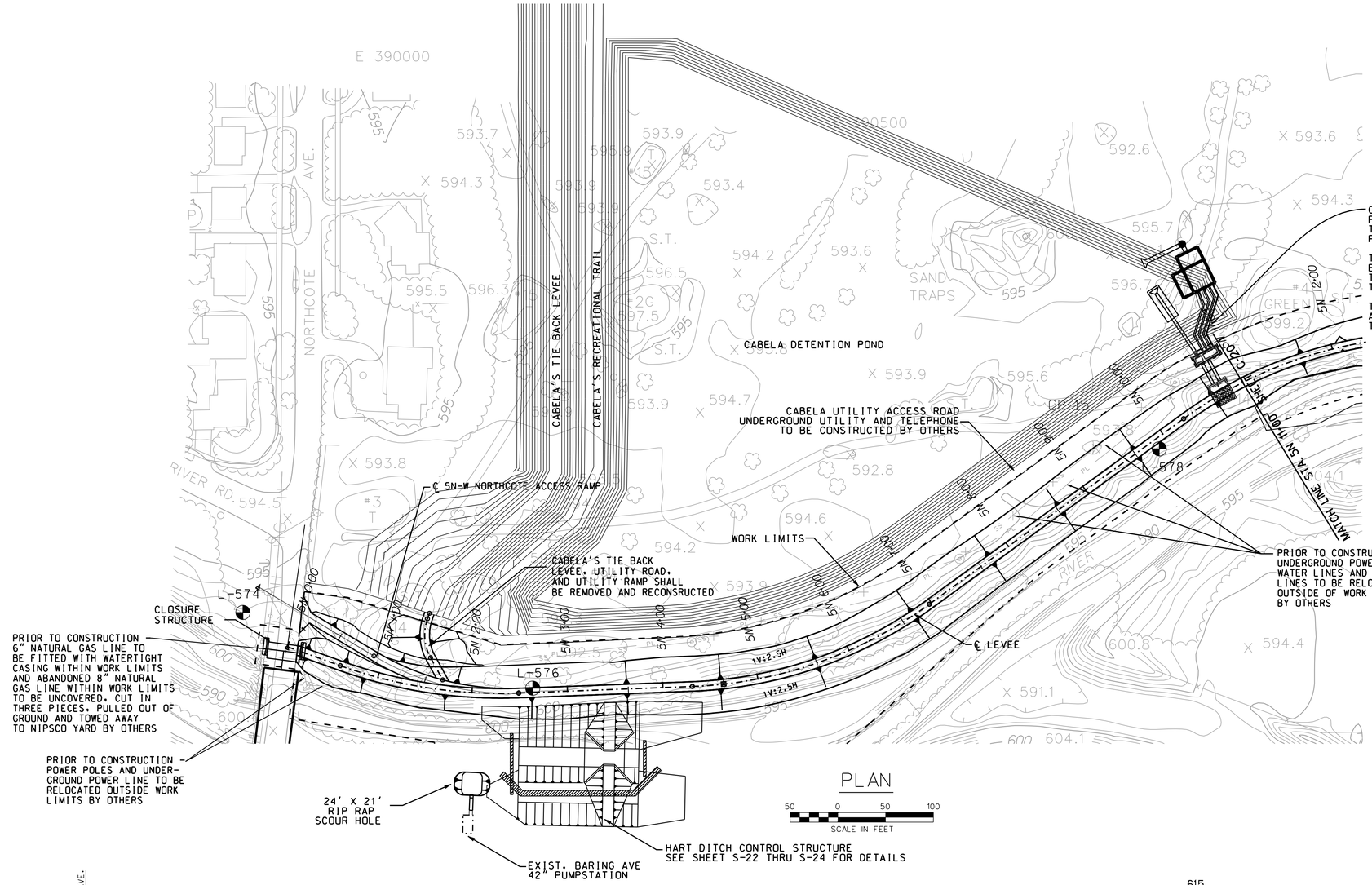

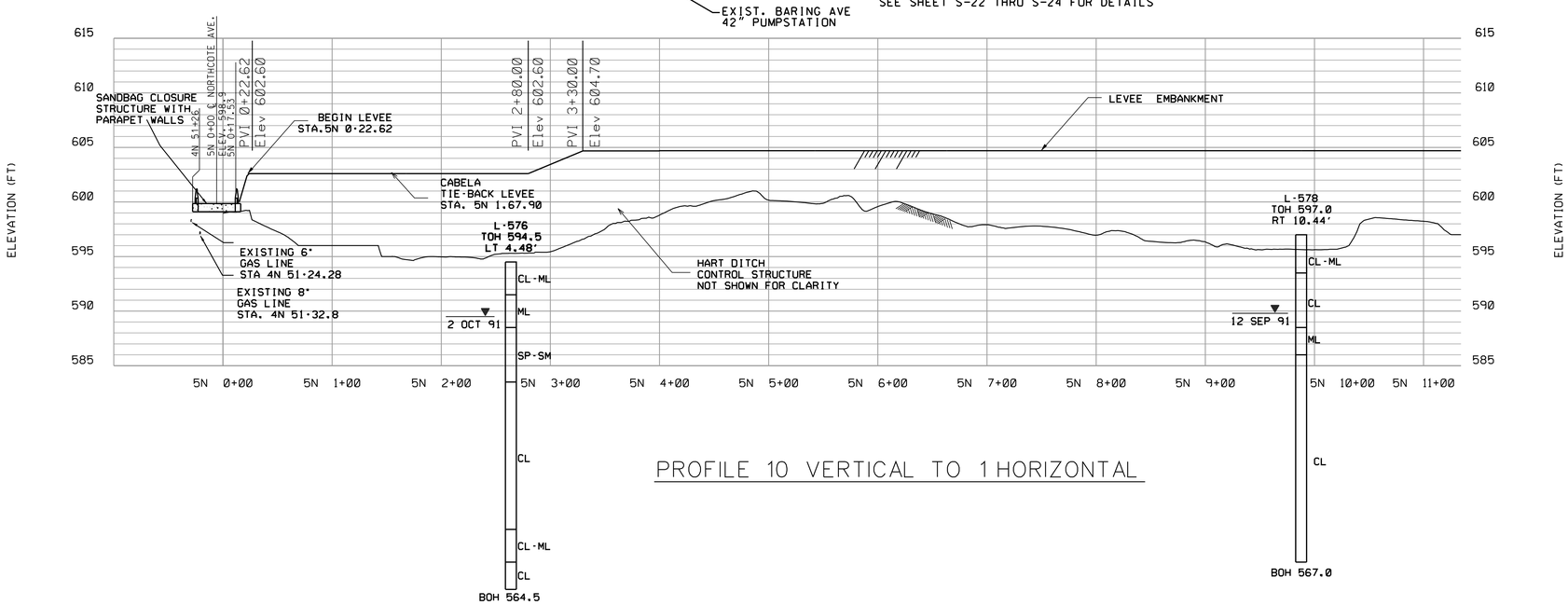

PROFILE 10 VERTICAL TO 1 HORIZONTAL

NOTES

1. FOR SYMBOLS, ABBREVIATIONS, AND GENERAL NOTES, SEE SHEETS G-03 AND G-04.

2. FOR ACCESS RAMP ALIGNMENT AND DETAILS SEE SHEET C-57

3. FOR CLOSURE STRUCTURE DETAILS, SEE SHEET S-21

4. EXISTING FENCE AT SHEET PILE FLOODWALL TO BE REMOVED FOR CONSTRUCTION. CONTRACTOR SHALL PROVIDE C.O.E. APPROVED PROTECTION TO CONTROL OR RESTRICT ACCESS TO AREA DURING CONSTRUCTION BY UNATHORIZED PERSONNEL. CONTRACTOR SHALL PROVIDE ACCESS GATE TO MATCH EXISTING FENCE FOR CONSTRUCTION ACCESS AND PERMANENT LEVEE ACCESS. UPON COMPLETION OF SHEET PILE FLOOD WALL, PERMANENT FENCE LINE TO BE EXTENDED TO AND ACROSS WALL AND TIE INTO NORTHEAST BRIDGE PARAPET.

5. LEVEE AND RECREATION TRAIL CONTROL POINTS ON WORK LIMITS SHEET C-06.

6. FOR TYPICAL SECTIONS SEE SHEET C-42.

7. FOR CROSS SECTIONS SEE SHEET C-35.

8. CABELA'S WILL CONSTRUCT A TIE-BACK LEVEE TO EXISTTING SPOILBANK, PRIOR TO THIS CONTRACT. THE CONTRACTOR SHALL REMOVE THE EXISTING TIE-BACK LEVEE WITHIN THE WORKLIMITS, TO CONSTRUCT THE USACE LEVEE AND THEN REBUILD THE TIE-BACK LEVEE.

US Army Corps of Engineers
Chicago District

SYMBOL	AMENDMENT DESCRIPTION	DATE APPROVED	SYMBOL	DESCRIPTION	DATE APPROVED

DESIGNED BY: JAG
DATE: AUG 2007
DRAWN BY: DB
SCALE: AS SHOWN
CHECKED BY: WK
SOLICITATION NUMBER: W912P6-07-B-0006
SUBMITTED BY: JOHN GROBOSKI
DATE:

U.S. ARMY ENGINEER DISTRICT
CORPS OF ENGINEERS
CHICAGO, ILLINOIS

LITTLE CALUMET RIVER, INDIANA
LOCAL FLOOD PROTECTION
STAGE V, PHASE 2 - LEVEE

PLAN AND PROFILE
STA. 5N 0+00 TO 5N 11+00

SHEET REFERENCE NUMBER:
C-19

PLOT DATE: 8/6/2007
FILENAME: C:\working\dms10534\LCS5C19.DGN

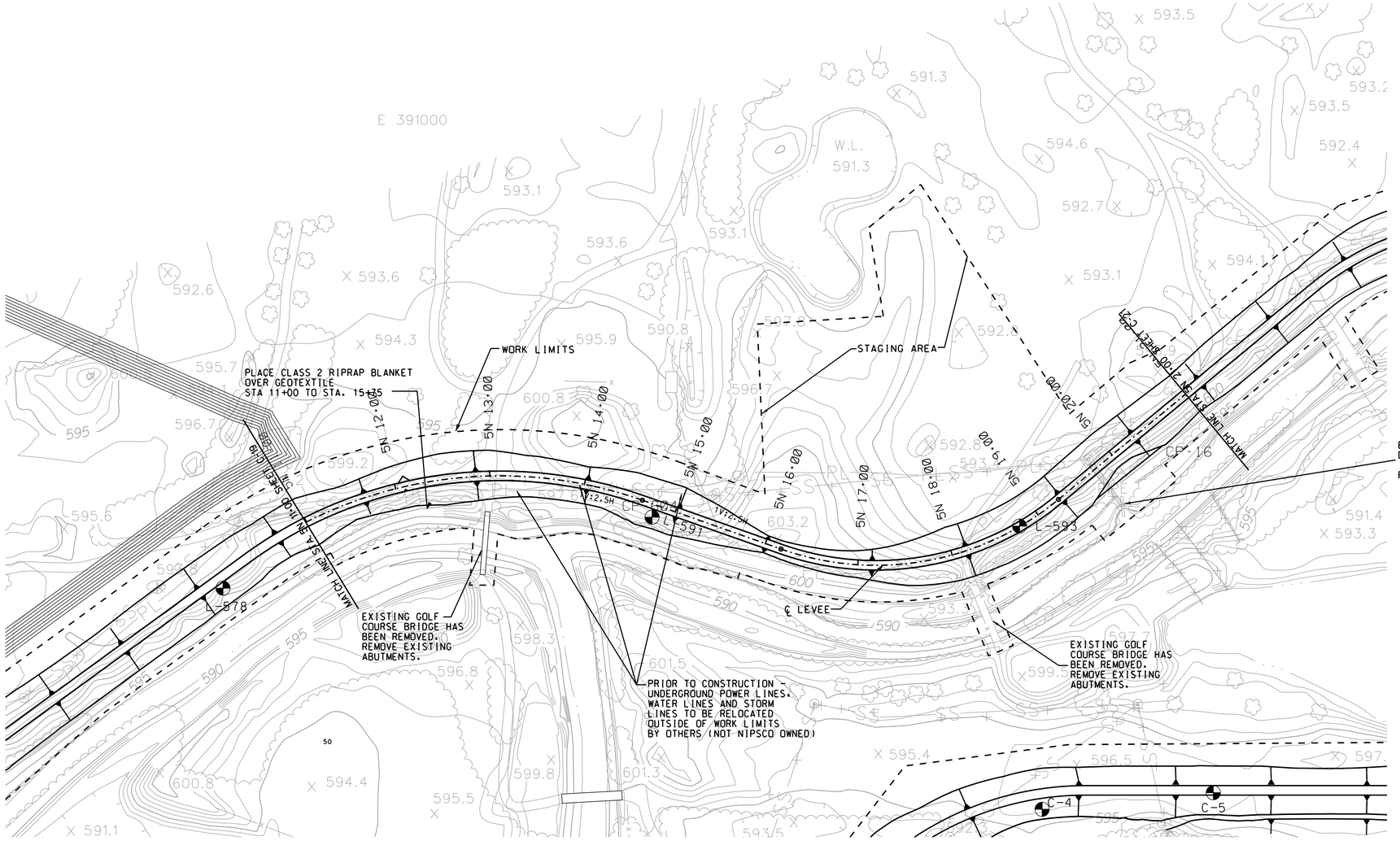

PLAN

50 0 50 100
SCALE IN FEET

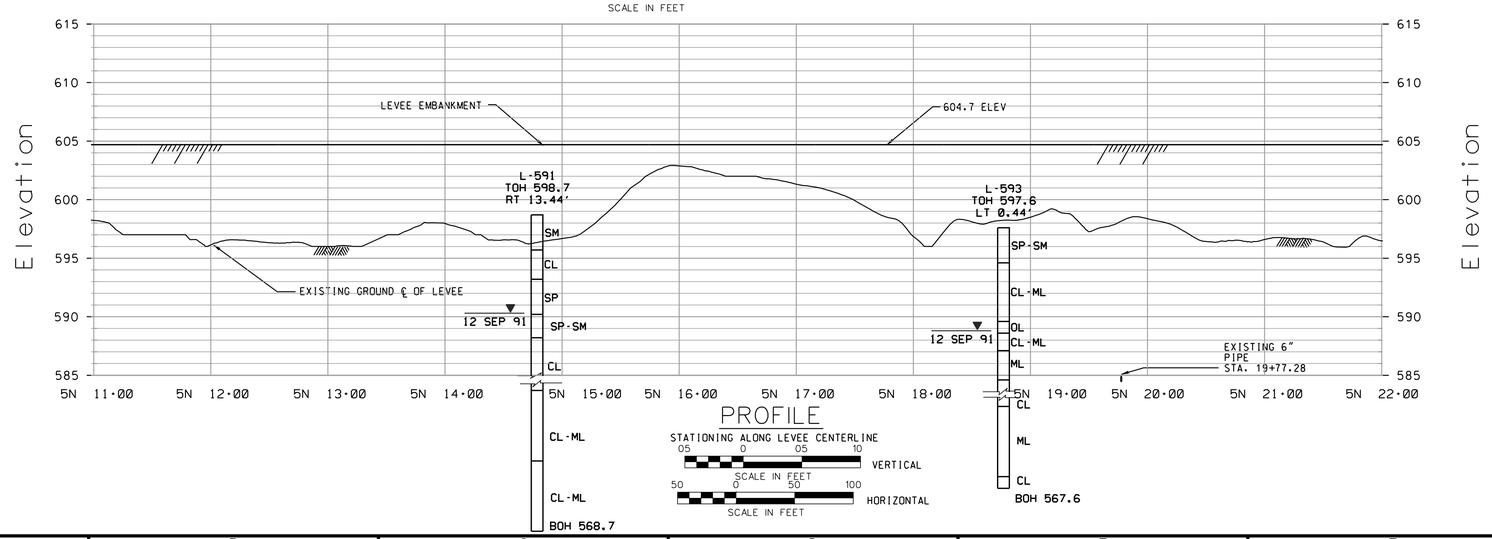

PROFILE

STATIONING ALONG LEVEE CENTERLINE
05 0 05 10 VERTICAL
SCALE IN FEET
50 0 50 100 HORIZONTAL
SCALE IN FEET

NOTES:

1. FOR SYMBOLS, ABBREVIATIONS AND GENERAL NOTES, SEE SHEETS G-03 AND G-04.
2. IF NOT FEASIBLE TO RELOCATE UTILITIES OUTSIDE STAGING AREA (BY OTHERS), CONTRACTOR IS RESPONSIBLE FOR ANY DAMAGE TO THE LINES AND SHALL REPAIR DAMAGE IMMEDIATELY TO ENSURE UNINTERRUPTED SERVICE TO THE PUMP STATION.
3. FOR HART DITCH RIP-RAP DETAILS, SEE SHEET C-46.
4. FOR CROSS SECTIONS SEE SHEETS C-35 AND C-36.
5. FOR LEVEE TYPICAL SECTION SEE SHEET C-42.
6. FOR RIP RAP PLACEMENT AT HARTS DITCH SEE C-42.

US Army Corps of Engineers
Chicago District

SYMBOL	AMENDMENT DESCRIPTION	DATE APPROVED	SYMBOL	DESCRIPTION	DATE APPROVED

DESIGNED BY: JAG
DATE: AUG 2007
DRAWN BY: DB
SCALE: AS SHOWN
CHECKED BY: WK
SOLICITATION NUMBER: W912P6-07-B-0006
SUBMITTED BY: JOHN GROBOSKI
DATE:

U.S. ARMY ENGINEER DISTRICT
CORPS OF ENGINEERS
CHICAGO, ILLINOIS

LITTLE CALUMET RIVER, INDIANA
LOCAL FLOOD PROTECTION
STAGE V, PHASE 2 - LEVEE

PLAN AND PROFILE
STA. 5N 11+00 TO 5N 21+00

SHEET REFERENCE NUMBER:
C-20

PLOT DATE: 8/3/2007
FILENAME: D:\working\dms10534\LCS5C20.DGN

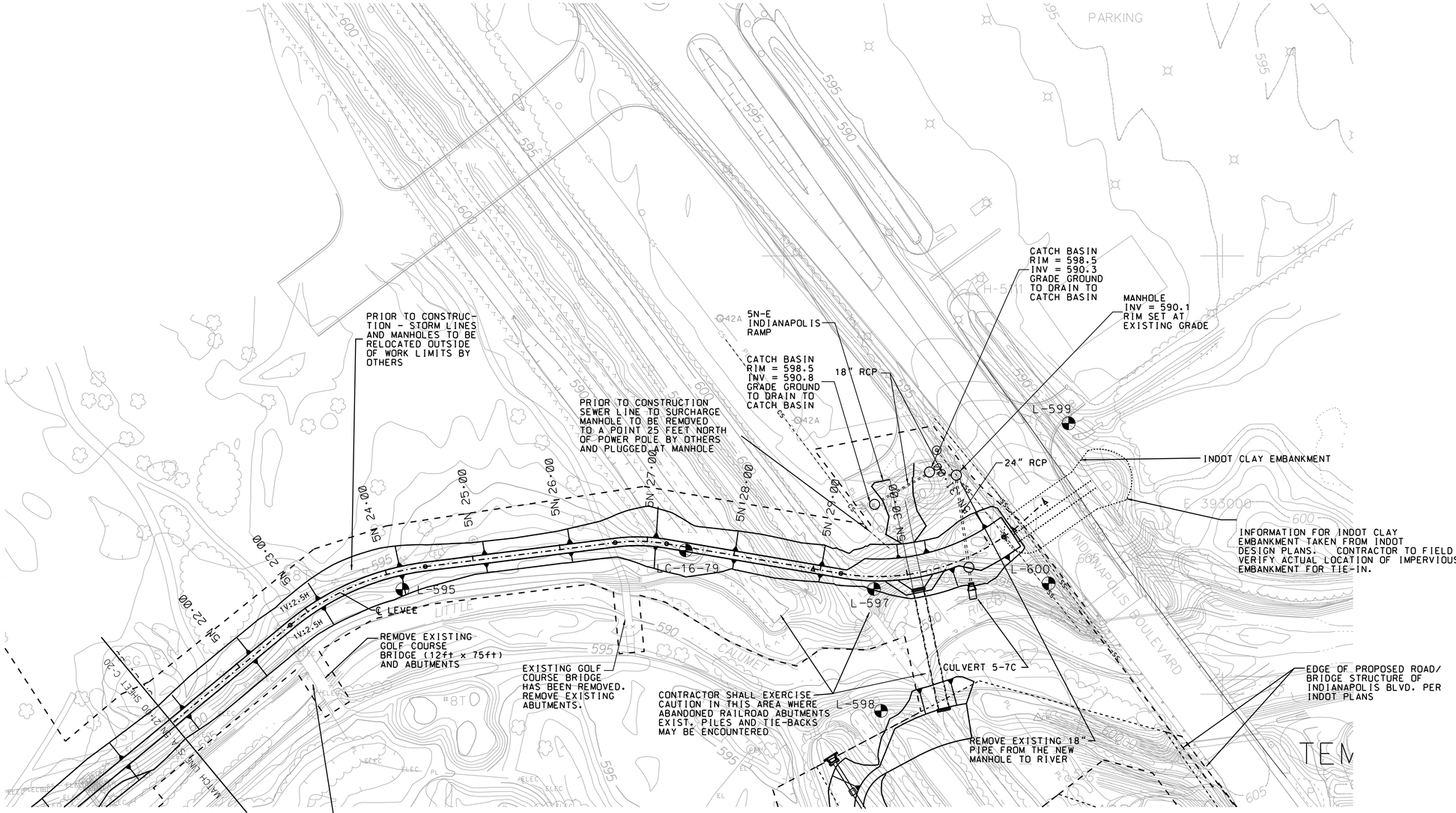

PLAN

50 0 50 100

SCALE IN FEET

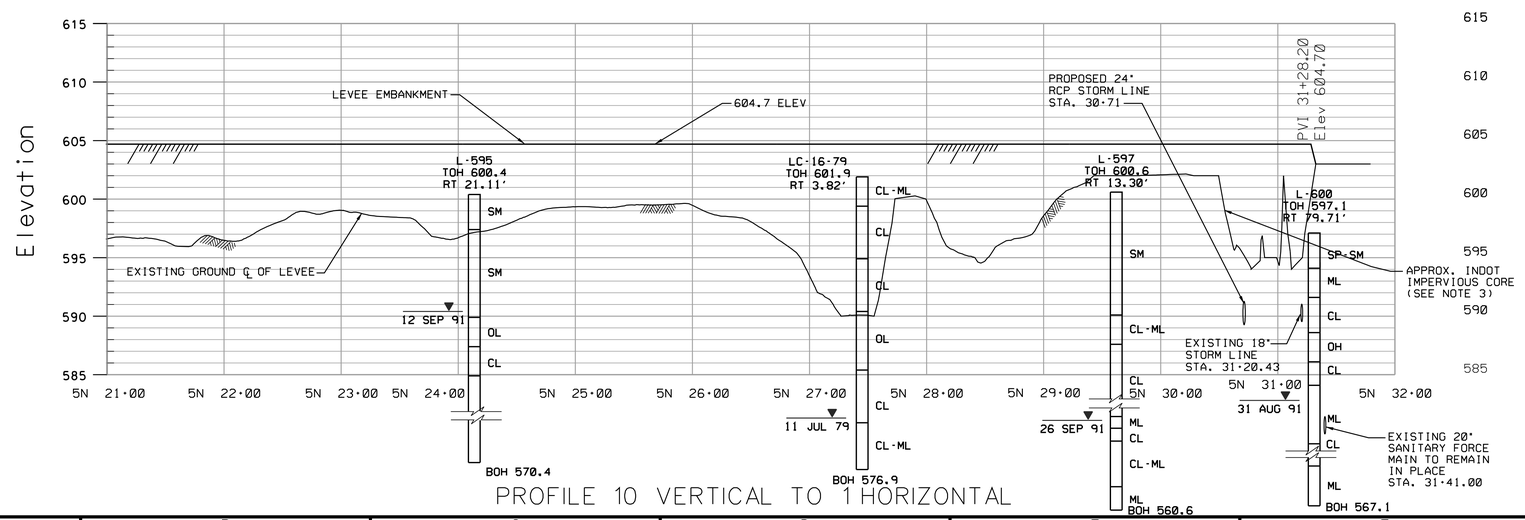

PROFILE 10 VERTICAL TO 1 HORIZONTAL

NOTES:

1. FOR SYMBOLS, ABBREVIATIONS AND GENERAL NOTES, SEE SHEETS G-03 AND G-04.
2. PROPOSED RECREATION TRAIL NOT SHOWN ON THIS SHEET.
3. CONTRACTOR RESPONSIBLE FOR TYING INTO INDOT IMPERVIOUS EMBANKMENT THROUGHOUT THE ENTIRE CROSS SECTION.
4. FOR CROSS SECTIONS, SEE SHEETS C-36 AND C-37.
5. FOR LEVEE TYPICAL SECTIONS SEE SHEET C-42.
6. FOR CULVERT 5-7C DETAILS SEE SHEET C-50.

US Army Corps of Engineers
Chicago District

SYMBOL	AMENDMENT DESCRIPTION	DATE APPROVED	SYMBOL	DESCRIPTION	DATE APPROVED

DESIGNED BY: JAG
DATE: AUG 2007
DRAWN BY: DB
SCALE: AS SHOWN
CHECKED BY: WK
SOLICITATION NUMBER: W912P6-07-B-0006
SUBMITTED BY: JOHN GROBOSKI
DATE:

U.S. ARMY ENGINEER DISTRICT
CORPS OF ENGINEERS
CHICAGO, ILLINOIS

LITTLE CALUMET RIVER, INDIANA
LOCAL FLOOD PROTECTION
STAGE V, PHASE 2 - LEVEE

PLAN AND PROFILE
STA. 5N 21+00 TO 5N 31+71

SHEET REFERENCE NUMBER:
C-21

SHEET 25 OF 138

PLOT DATE: 8/3/2007
FILENAME: D:\working\sms10534\CS5C21DGN

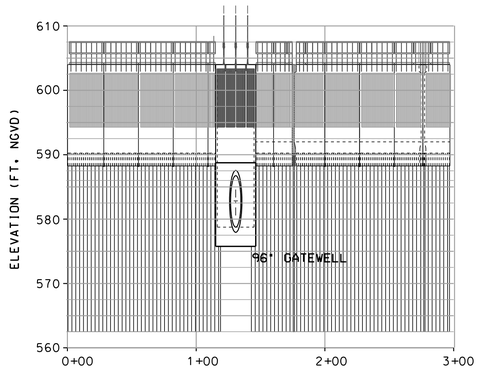

FLOODWALL PROFILE

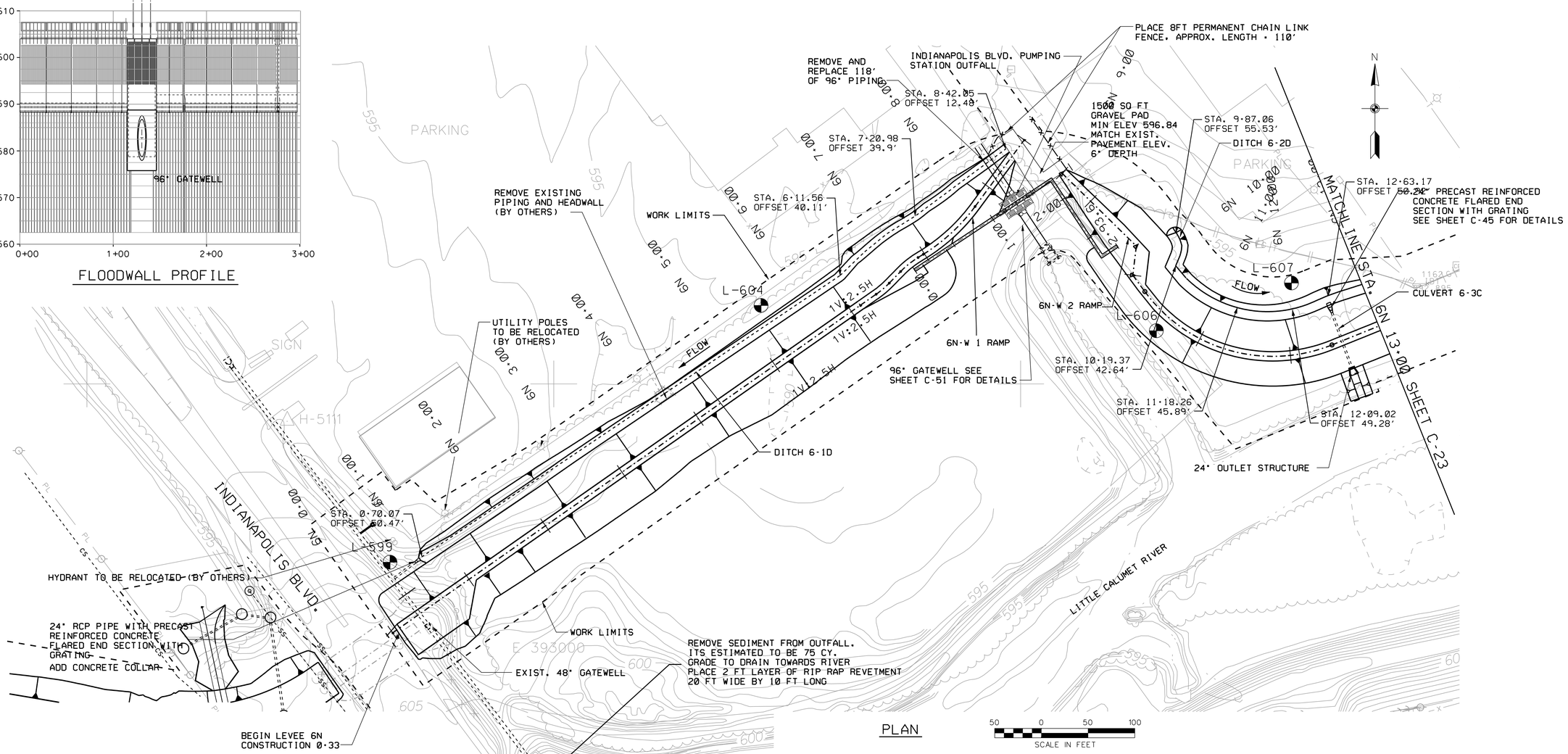

PLAN

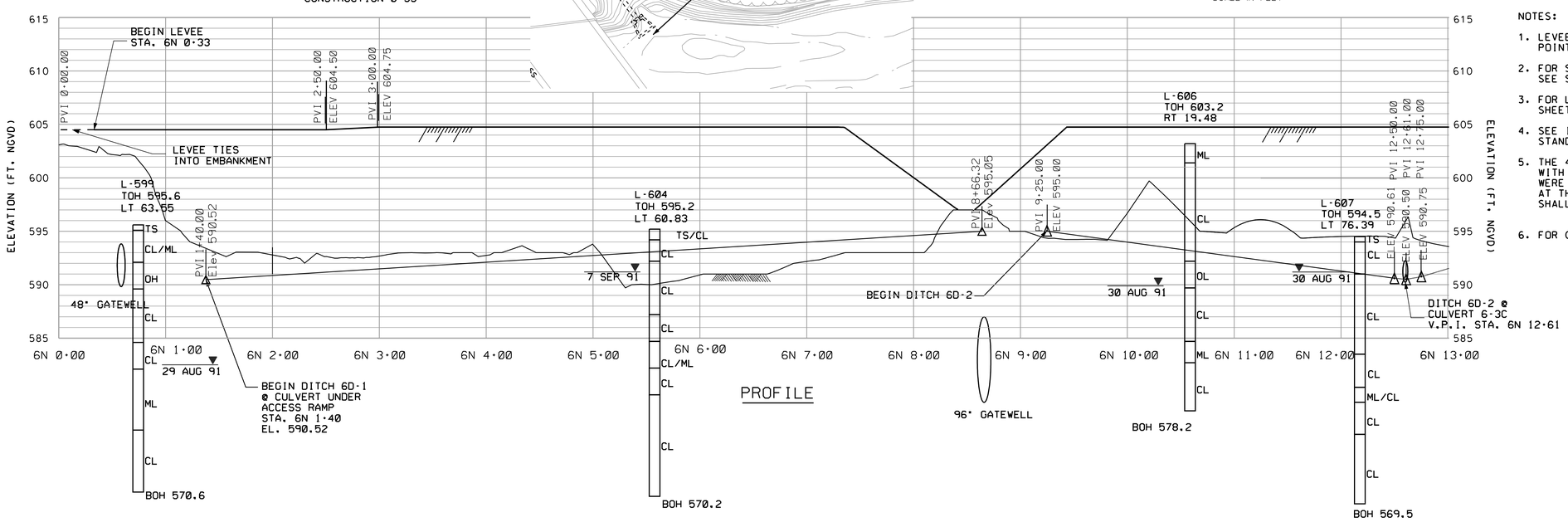

PROFILE

NOTES:

1. LEVEE, RECREATION TRAIL, AND DITCH CONTROLS POINTS ARE LISTED ON WORK LIMITS SHEET C-09.
2. FOR SYMBOLS, ABBREVIATIONS, AND GENERAL NOTES SEE SHEETS G-03 AND G-04.
3. FOR LEVEE AND DITCH TYPICAL SECTIONS SEE SHEET C-42.
4. SEE INDIANA DEPARTMENT OF TRANSPORTATION STANDARDS FOR CATCH BASIN AND CASTING DETAILS.
5. THE 48" GATEWELL, CULVERT 6-2C, 24" RCP PIPE WITH END SECTION, AND EMBANKMENT BY OTHERS WERE BASED ON THE BEST AVAILABLE INFORMATION AT THE TIME OF DESIGN. THE ACTUAL LOCATION SHALL BE VERIFIED BY THE CONTRACTOR.
6. FOR CROSS SECTIONS SEE SHEETS C-35 AND C-39.

US Army Corps of Engineers
Chicago District

SYMBOL	AMENDMENT DESCRIPTION	DATE APPROVED	SYMBOL	DESCRIPTION	DATE APPROVED

DESIGNED BY: JAG
DATE: AUG 2007
DRAWN BY: DB
SCALE: AS SHOWN
CHECKED BY: WK
SOLICITATION NUMBER: W912P6-07-B-0006
SUBMITTED BY: JOHN GROBOSKI
DATE:

U.S. ARMY ENGINEER DISTRICT
CORPS OF ENGINEERS
CHICAGO, ILLINOIS

LITTLE CALUMET RIVER, INDIANA
LOCAL FLOOD PROTECTION
STAGE V, PHASE 2 - LEVEE

PLAN AND PROFILE
STA. 6N 0+00 TO STA. 6N 13+00

SHEET REFERENCE NUMBER:
C-22
SHEET 26 OF 138

PLOT DATE: 8/6/2007
FILENAME: D:\working\dms10534\LC55C22.DGN

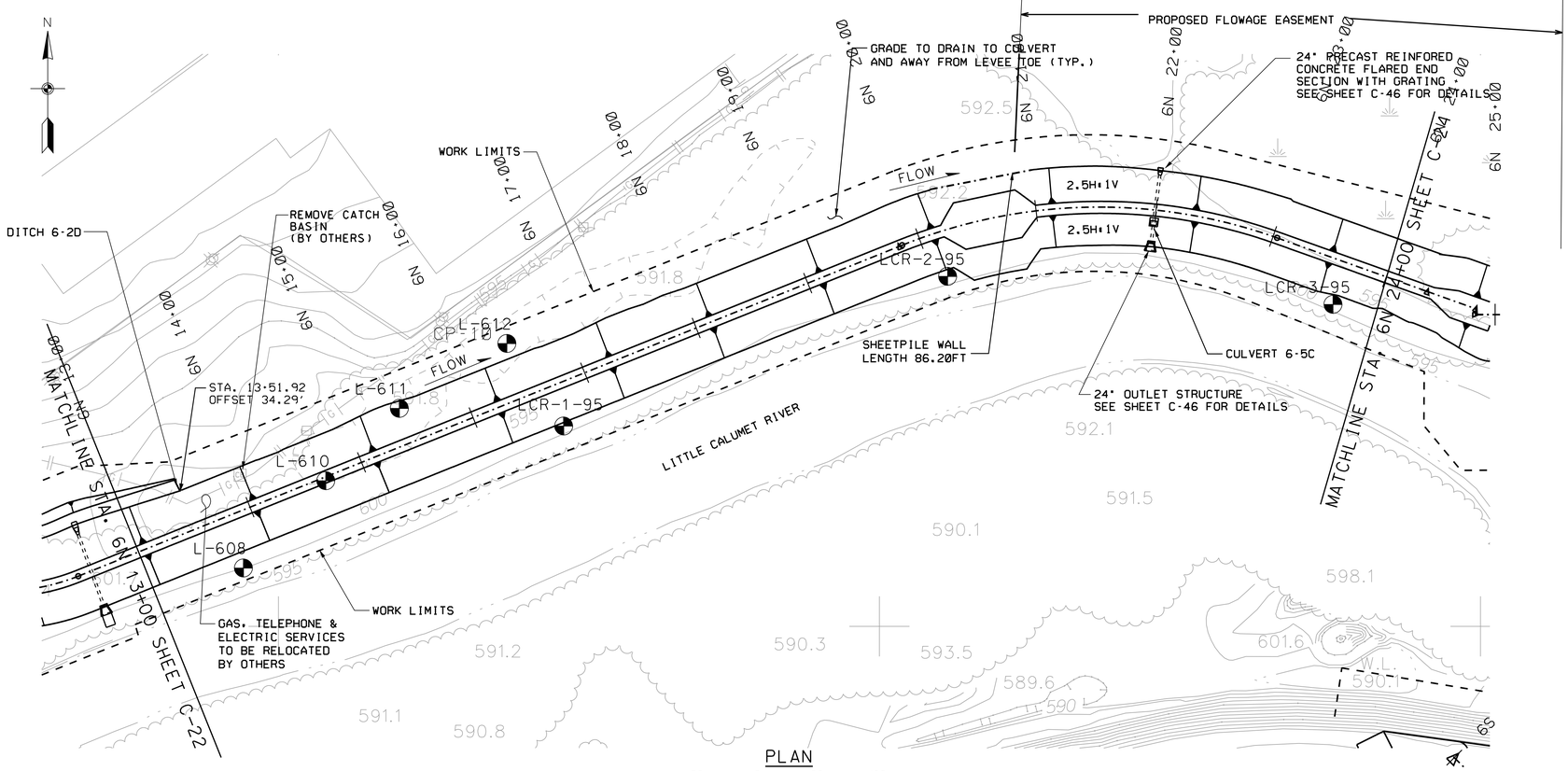

PLAN

SCALE IN FEET

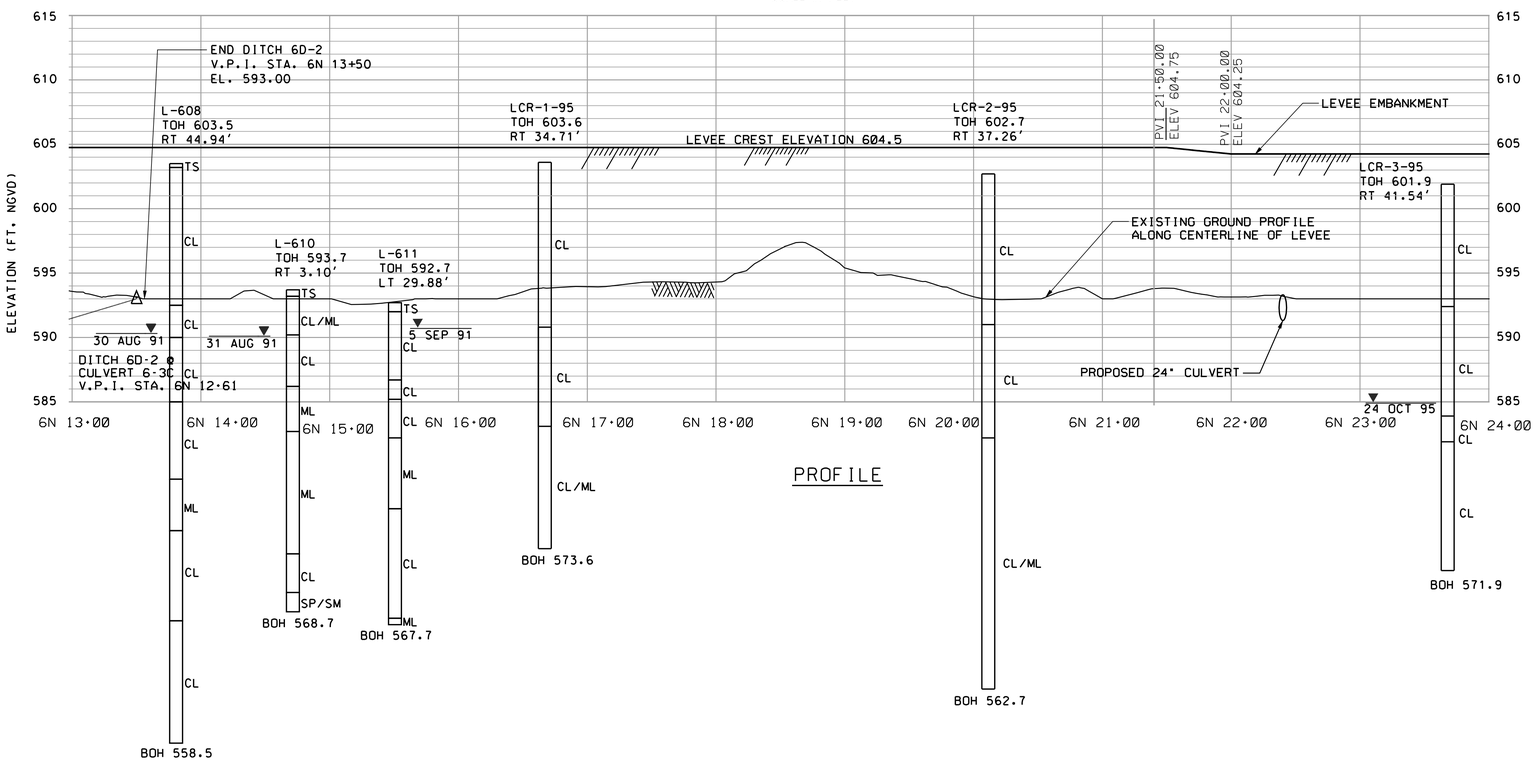

PROFILE

NOTES:

1. LEVEE AND DITCH CONTROL POINTS ARE LISTED ON WORK LIMITS SHEETS C-09 AND C-10.
2. FOR SYMBOLS, ABBREVIATIONS, AND GENERAL NOTES SEE SHEETS G-03 AND G-04.
3. FOR LEVEE AND DITCH TYPICAL SECTIONS SEE SHEETS C-42.
4. FOR CROSS SECTIONS SEE SHEETS C-39 AND C-40.

US Army Corps of Engineers
Chicago District

SYMBOL	AMENDMENT DESCRIPTION	DATE APPROVED	SYMBOL	DESCRIPTION	DATE APPROVED

DESIGNED BY: JAG
DATE: AUG 2007
DRAWN BY: DB
SCALE: AS SHOWN
CHECKED BY: WK
SOLICITATION NUMBER: W912P6-07-B-0006
SUBMITTED BY: JOHN GROBOSKI
DATE:

U.S. ARMY ENGINEER DISTRICT
CORPS OF ENGINEERS
CHICAGO, ILLINOIS

LITTLE CALUMET RIVER, INDIANA
LOCAL FLOOD PROTECTION
STAGE V, PHASE 2 - LEVEE

PLAN AND PROFILE
STA. 6N 13+00 TO STA. 6N 24+00

SHEET REFERENCE NUMBER:
C-23
SHEET 27 OF 138

PLOT DATE: 8/6/2007
FILENAME: D:\working\dms10534\LCS5C23.DGN

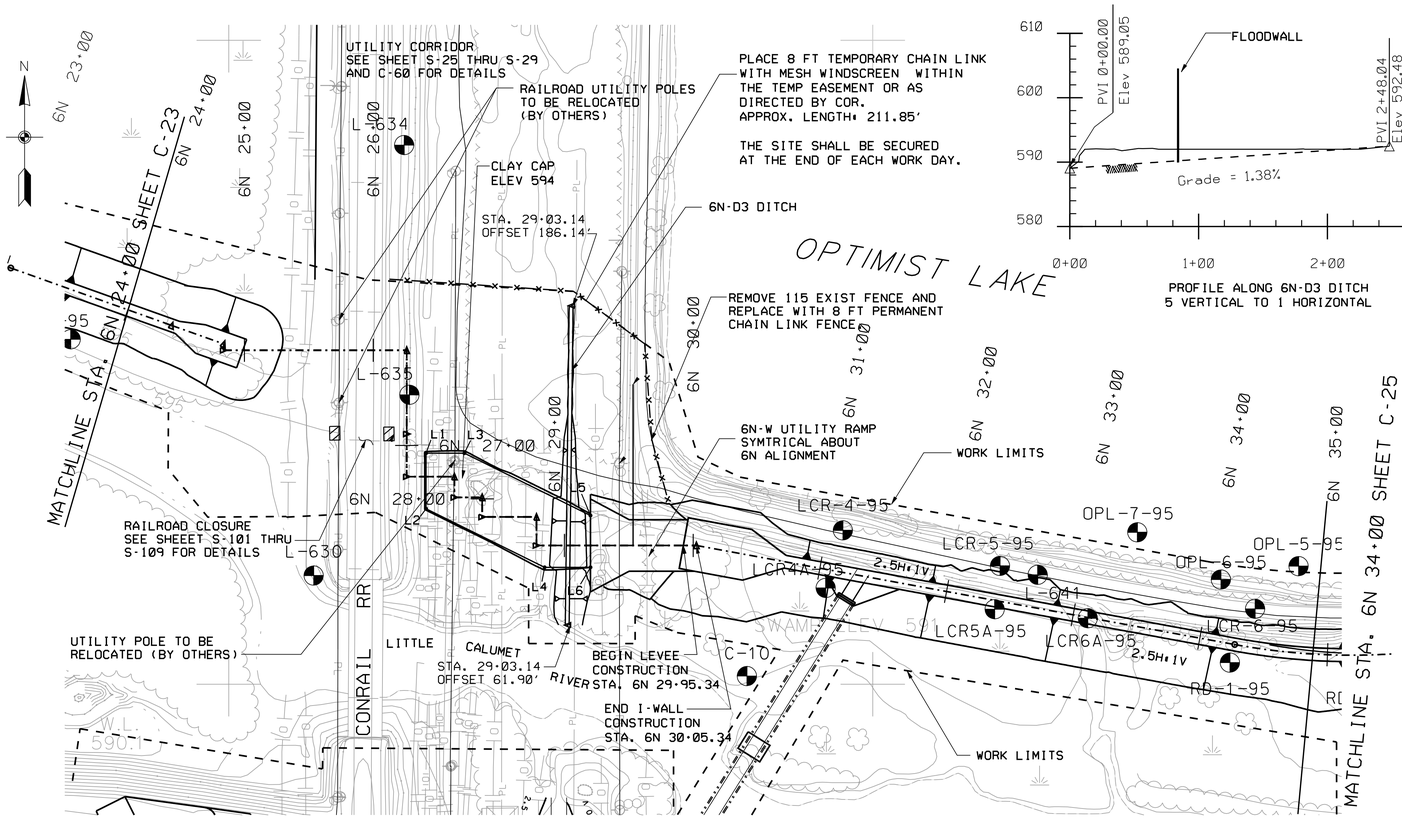

PLAN

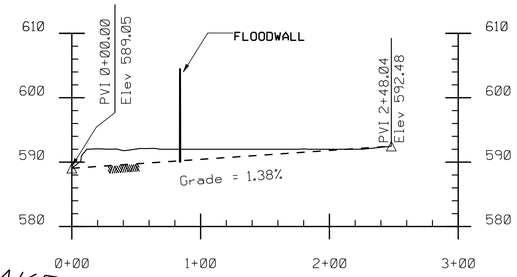

PROFILE ALONG 6N-D3 DITCH
5 VERTICAL TO 1 HORIZONTAL

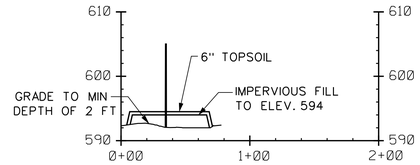

TYPICAL SECTION FOR CLAY CAP

POINTS	STATION	OFFSET	NORTHING	EASTING
L1	27+06.00	-15	1482679.4	395153.22
L2	27+39.20	24.92	1482636.27	395153.22
L3	27+85.09	-34.33	1482679.4	395182.98
L4	28+84.67	17	1482590.77	395245.26
L5	29+20.27	-23.23	1482631	395280.87
L6	29+20.27	17	1482590.77	395280.87

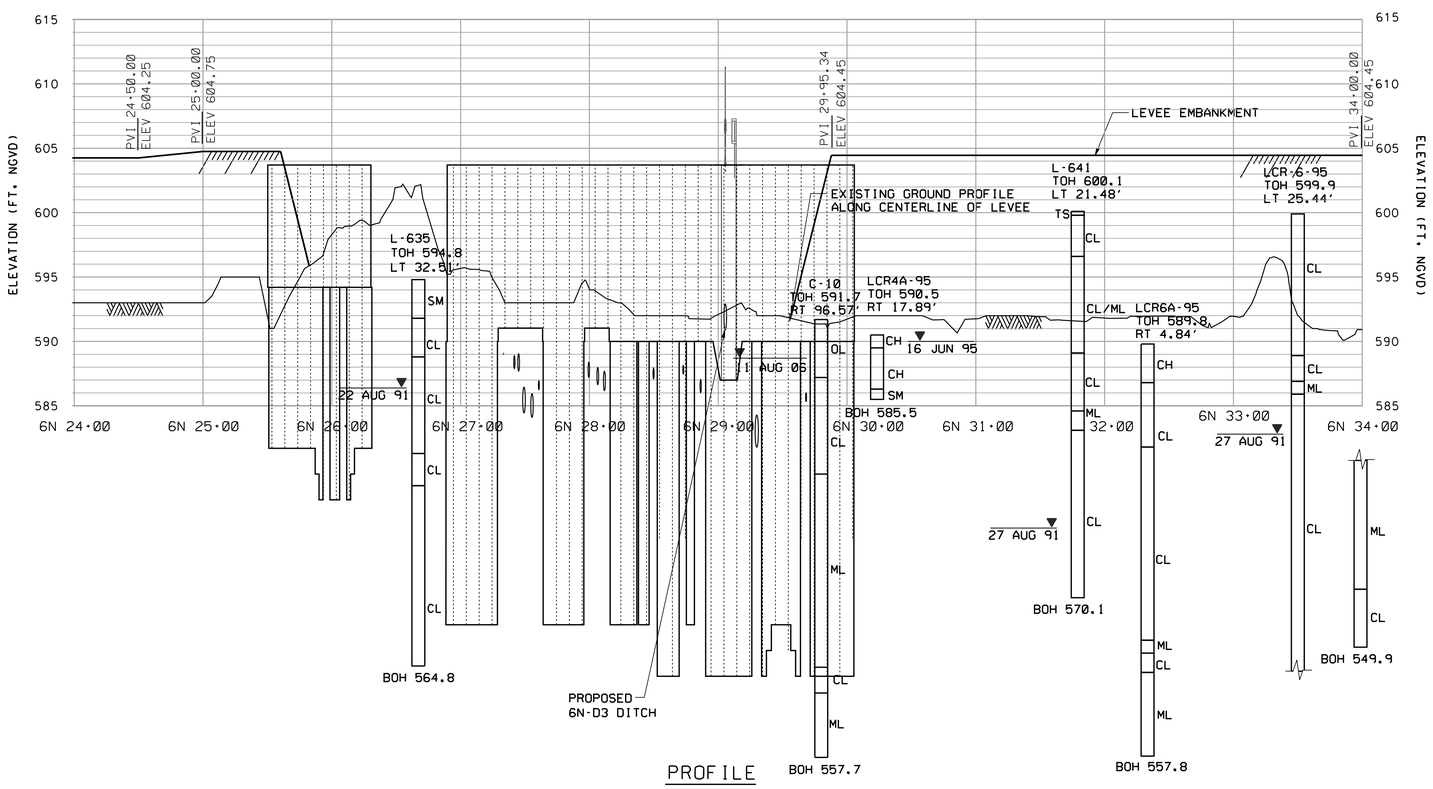

PROFILE

NOTES:

1. LEVEE CONTROL POINTS ARE LISTED ON WORK LIMITS SHEET C-10.
2. FOR SYMBOLS, ABBREVIATIONS, AND GENERAL NOTES SEE SHEETS G-03 AND G-04.
3. FOR LEVEE TYPICAL SECTIONS SEE SHEET C-42.
4. FOR I-WALL DETAILS AND PROFILE SEE SHEET S-07, S-09, S-25 TO S-29.
5. FOR CROSS SECTIONS SEE SHEET C-40.
6. THE AREA ALONG THE SOUTHERN BANKS OF OPTIMIST LAKE SHALL BE GRUBBED OF ALL VEGETATION. THE CONTRACTOR SHALL INCLUDE THE REMOVAL IN THE ACCIDENT PREVENTION PLAN.
7. DITCH 6N-D3 HAS WIDTH OF 3 FT FLAT BOTTOM WITH 3H TO 1V SIDE SLOPES. IT SHALL BE EXCAVATED 1 FT BELOW PROVIDED GRADE IN THE PROFILE, LINED WITH GEOTEXTILE FABRIC, AND 1 FT OF RIP-RAP.

US Army Corps of Engineers Chicago District

SYMBOL	AMENDMENT DESCRIPTION	DATE APPROVED	SYMBOL	DESCRIPTION	DATE APPROVED

DESIGNED BY: JAG | DATE: AUG 2007
DRAWN BY: DB | SCALE: AS SHOWN
CHECKED BY: WK | SOLICITATION NUMBER: W912P6-07-B-0006
SUBMITTED BY: JOHN GROBOSKI | DATE:

U.S. ARMY ENGINEER DISTRICT
CORPS OF ENGINEERS
CHICAGO, ILLINOIS

LITTLE CALUMET RIVER, INDIANA
LOCAL FLOOD PROTECTION
STAGE V, PHASE 2 - LEVEE

PLAN AND PROFILE
STA. 6N 24+00 TO STA. 6N 34+00

SHEET REFERENCE NUMBER:
C-24
SHEET 28 OF 138

PLOT DATE: 8/6/2007
FILENAME: D:\working\sms\9534\LCS5C24.DGN

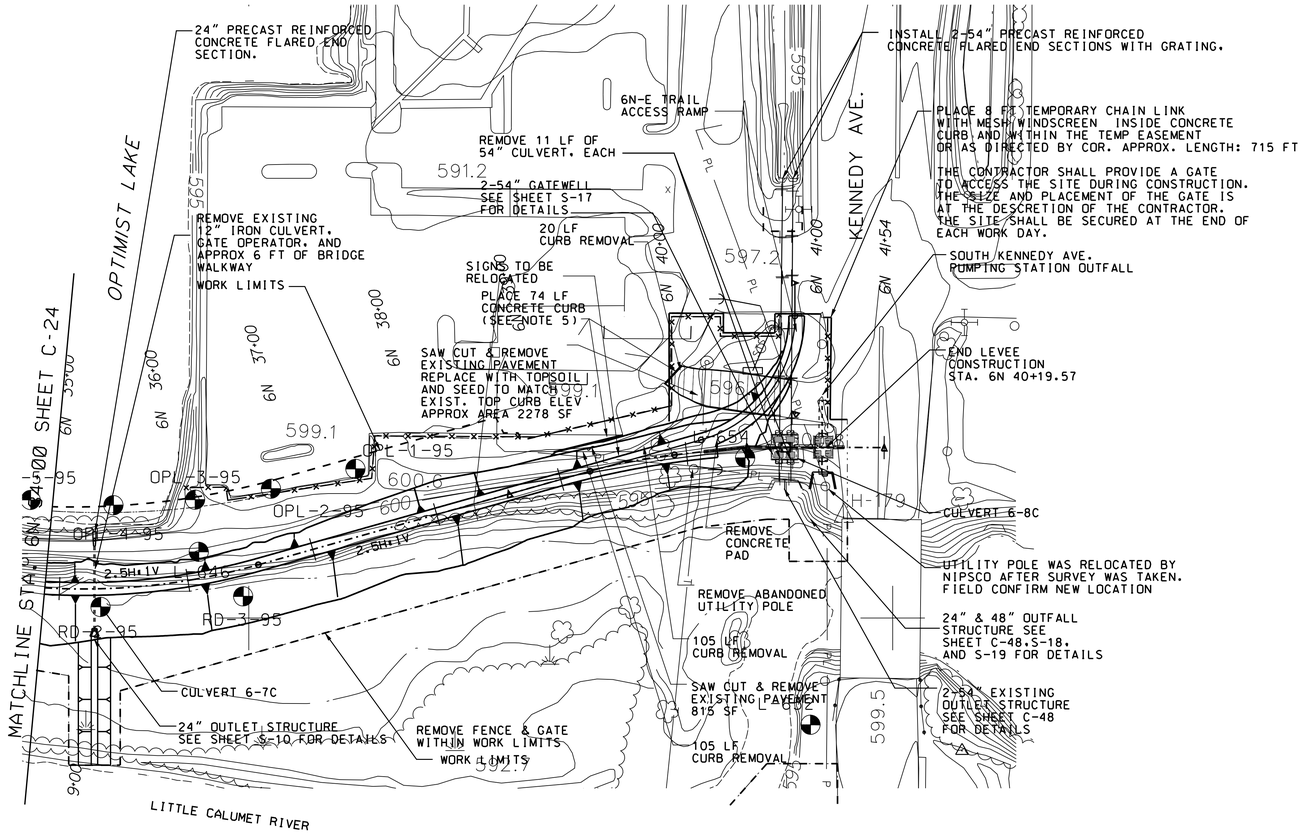

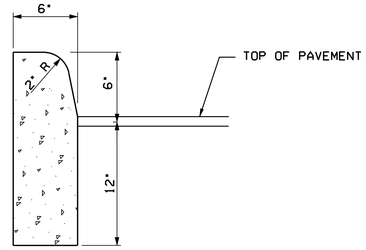

CONCRETE CURB
NOT TO SCALE

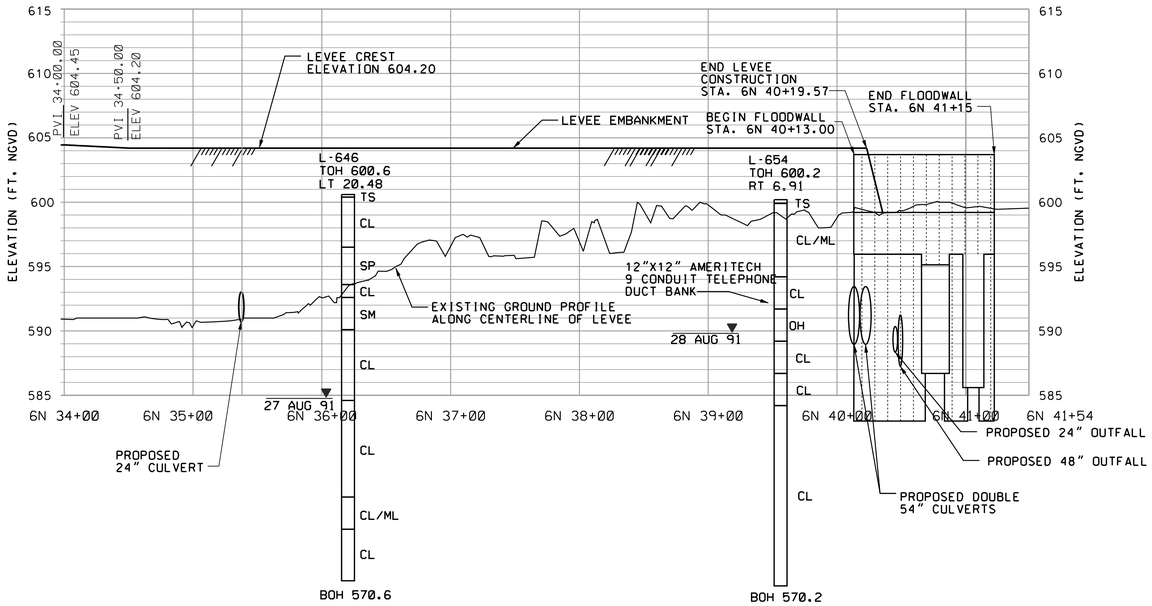

NOTES:

1. LEVEE AND RECREATION TRAIL CONTROL POINTS ON WORK LIMITS SHEET C-10.

2. FOR SYMBOLS, ABBREVIATIONS, AND GENERAL NOTES SEE SHEETS G-03 AND G-04.

3. FOR LEVEE TYPICAL SECTIONS SEE SHEETS C-42.

4. FOR RECREATION TRAIL DETAILS AND TYPICAL SECTION SEE SHEETS R-07.

5. FOR CONCRETE CURB DETAILS SEE THIS SHEET.

6. FOR CROSS SECTIONS SEE SHEETS C-40 AND C-41.

7. THE AREA ALONG THE SOUTHERN BANKS OF OPTIMIST LAKE SHALL BE GRUBBED OF ALL VEGETATION. THE CONTRACTOR SHALL INCLUDE THE REMOVAL IN THE ACCIDENT PREVENTION PLAN.

8. AFTER THE PAVEMENT HAS BEEN REMOVED AT THE BASE OF THE 6N-E RAMP AND CURB INSTALLED. THE AREA SHALL RECIEVE TOPSOIL TO MATCH THE TOP OF THE CURB AND GRADED SMOOTHLY. THE FINAL GRADED AREA SHALL BE SEEDED.

9. FOR RAMPS SEE SHEET C-58.

10. FOR OUTFALL STRUCTURE SEE SHEET S-18 AND S-19.

US Army Corps of Engineers
Chicago District

SYMBOL	AMENDMENT DESCRIPTION	DATE APPROVED	SYMBOL	DESCRIPTION	DATE APPROVED

DESIGNED BY: JAG | DATE: AUG 2007
DRAWN BY: DB | SCALE: AS SHOWN
CHECKED BY: WK | SOLICITATION NUMBER: W912P6-07-B-0006
SUBMITTED BY: JOHN GROBOSKI | DATE:

U.S. ARMY ENGINEER DISTRICT
CORPS OF ENGINEERS
CHICAGO, ILLINOIS

LITTLE CALUMET RIVER, INDIANA
LOCAL FLOOD PROTECTION
STAGE V, PHASE 2 - LEVEE

PLAN AND PROFILE
STA. 6N 34+00 TO STA. 6N 41+54

SHEET REFERENCE NUMBER:
C-25
SHEET 29 OF 138

PLOT DATE: $DATE$
FILENAME: $FILENAME$

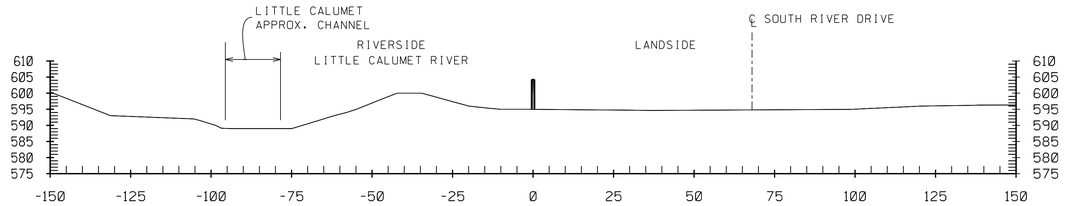

5S 5+00

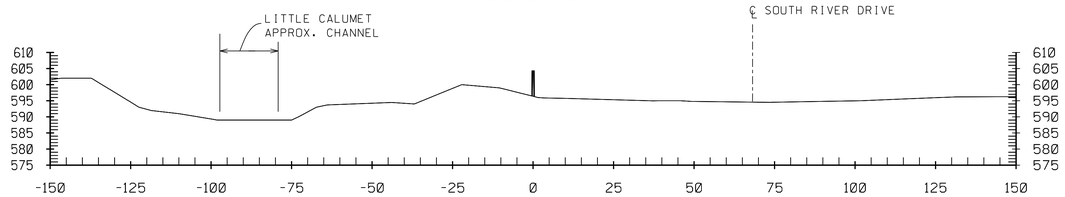

5S 4+00

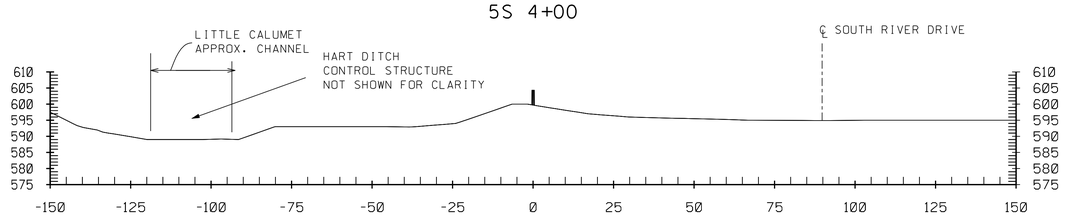

5S 3+00

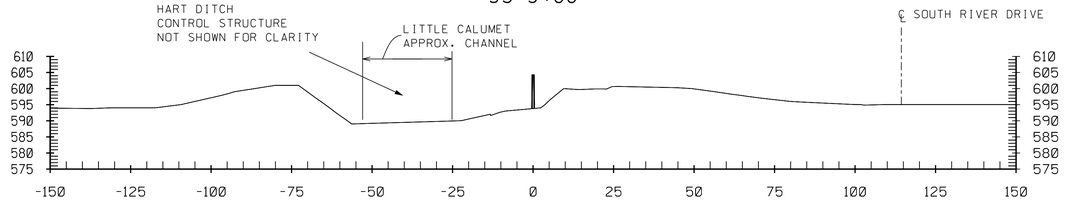

5S 2+00

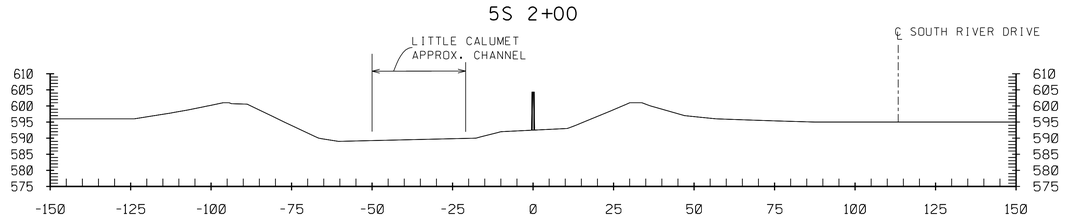

5S 1+00

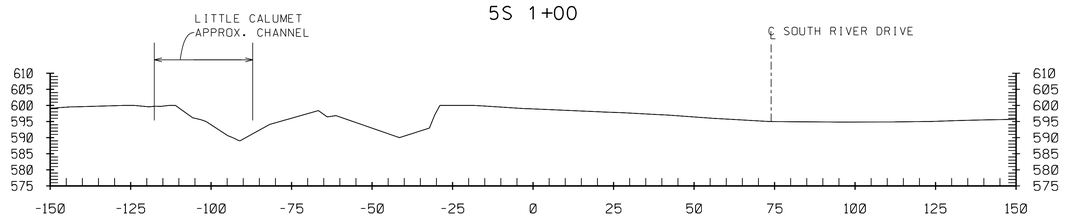

5S 0+00

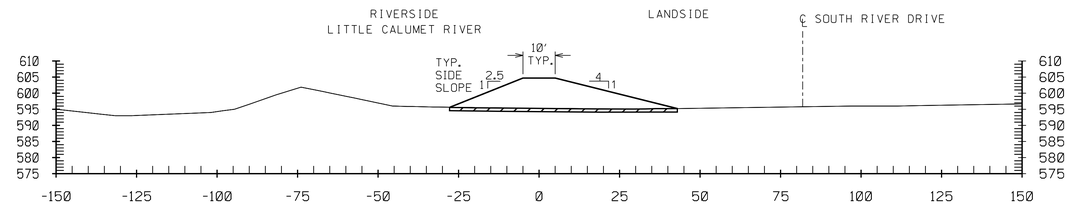

5S 11+00

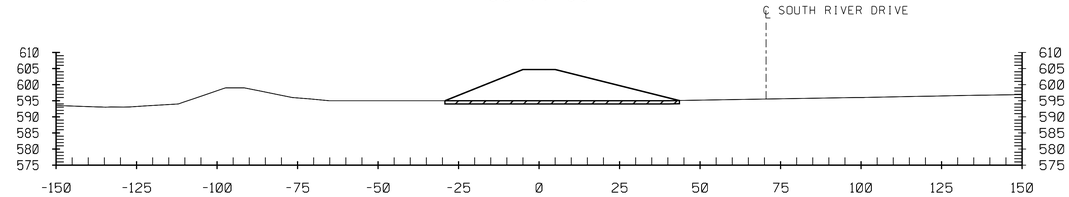

5S 10+00

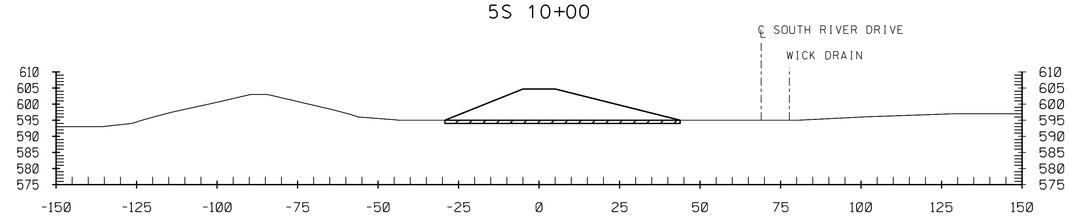

5S 9+00

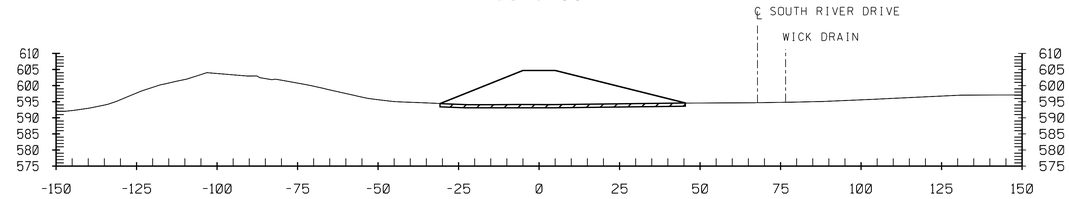

5S 8+00

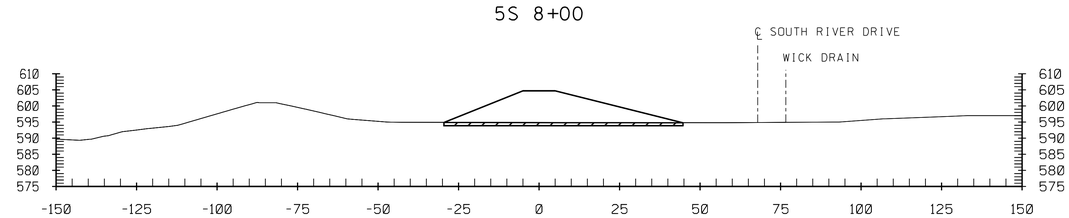

5S 7+00

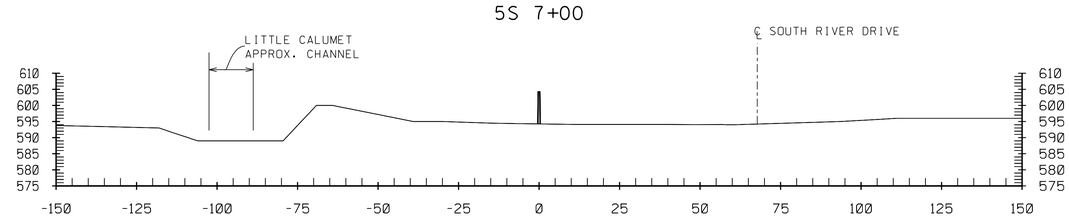

5S 6+00

NOTES:

1. FOR CONTROL POINTS AND WORKLIMITS SEE SHEET C-01.
2. FOR PLAN AND PROFILE SEE SHEET C-11.
3. FOR TYPICAL LEVEE AND DITCH SECTIONS SEE C-42
4. HYDROGRAPHIC SURVEY NOT TAKEN AT WATERWAYS. WATER SURFACE IS SHOWN AT TIME OF SURVEY.
5. APPROXIMATE LOCATIONS OF PLANAMETRICS ARE PROVIDED IN EACH SECTION. ALL FEATURES TO BE VERIFIED IN THE FIELD.

ONE FOOT STRIPPING

20' 10' 0 20'

SCALE: 1'' = 20'-0"

US Army Corps of Engineers
Chicago District

SYMBOL	DESCRIPTION	DATE	APPROVED	SYMBOL	DESCRIPTION	DATE	APPROVED

DESIGNED BY: JAG
DATE: AUG 2007
DRAWN BY: DB
SCALE: AS SHOWN
CHECKED BY: WK
SOLICITATION NUMBER: W912P6-07-B-0006
SUBMITTED BY: JOHN GROBOSKI
DATE:

U.S. ARMY ENGINEER DISTRICT
CORPS OF ENGINEERS
CHICAGO, ILLINOIS

LITTLE CALUMET RIVER, INDIANA
LOCAL FLOOD PROTECTION
STAGE V, PHASE 2 - LEVEE

CROSS SECTION
STA. 5S 0+00 to 5S 11+00

SHEET REFERENCE NUMBER:
C-26
SHEET 30 OF 138

PLOT DATE: 8/3/2007
FILENAME: D:\working\dms\0534\LCS5C26.DGN

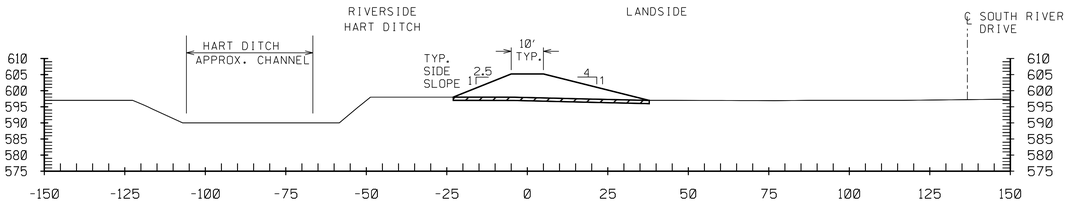

5S 17+00

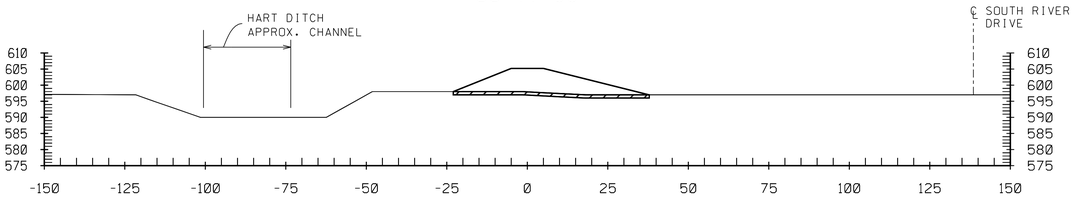

5S 16+00

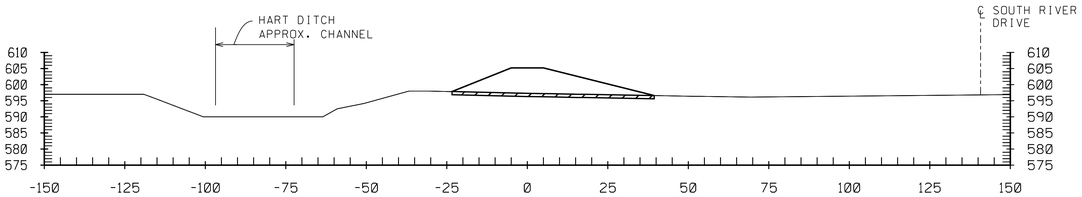

5S 15+00

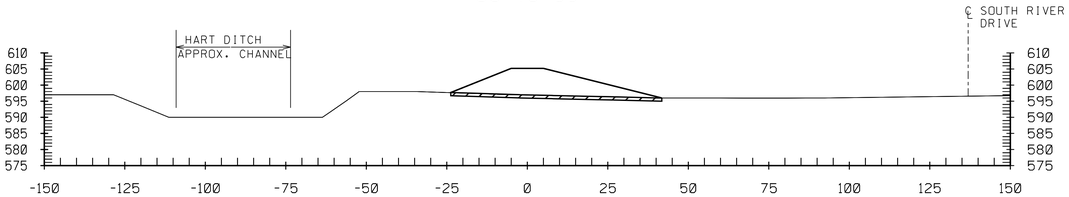

5S 14+00

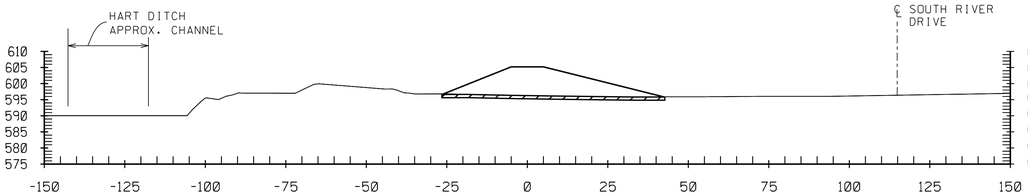

5S 13+00

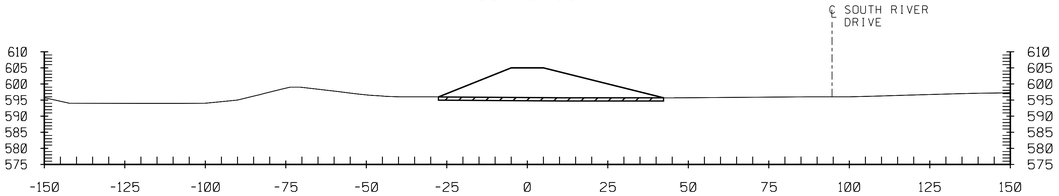

5S 12+00

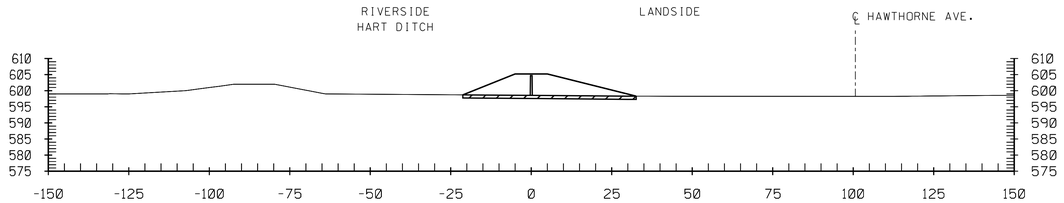

5S 23+00

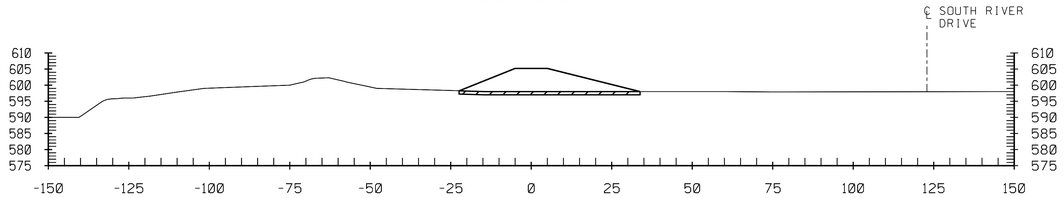

5S 22+00

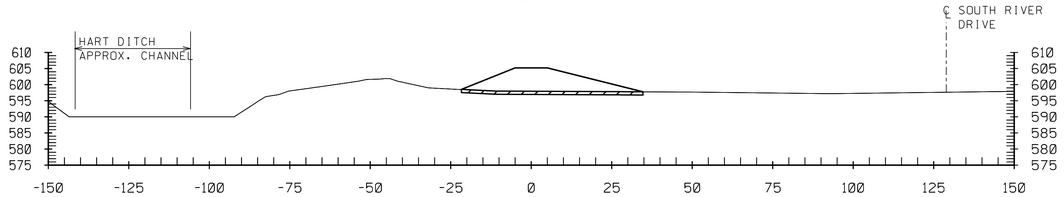

5S 21+00

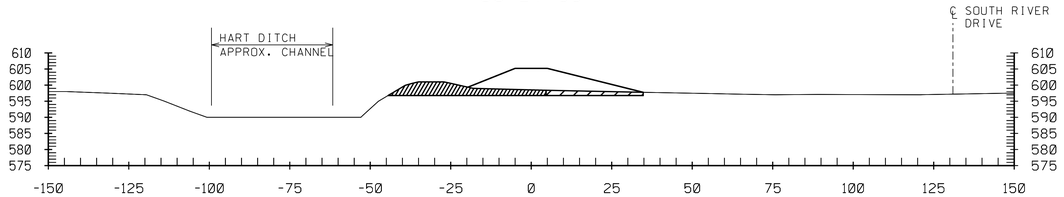

5S 20+00

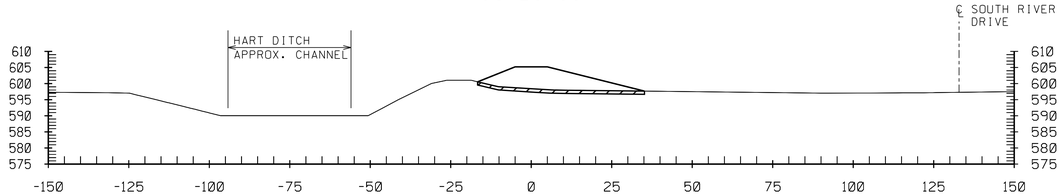

5S 19+00

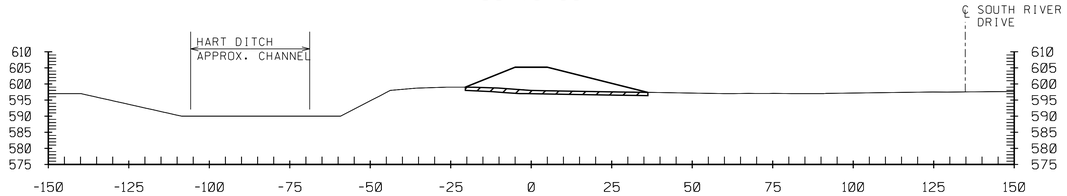

5S 18+00

NOTES:

1. FOR CONTROL POINTS AND WORKLIMITS SEE SHEET C-01 & C-02.
2. FOR PLAN AND PROFILE SEE SHEET C-12.
3. FOR TYPICAL LEVEE AND DITCH SECTIONS SEE C-42
4. HYDROGRAPHIC SURVEY NOT TAKEN AT WATERWAYS. WATER SURFACE IS SHOWN AT TIME OF SURVEY.
5. APPROXIMATE LOCATIONS OF PLANAMETRICS ARE PROVIDED IN EACH SECTION. ALL FEATURES TO BE VERIFIED IN THE FIELD.

ONE FOOT STRIPPING

SPOIL BANK REMOVAL

20' 10' 0 20'

SCALE: 1'' = 20'-0"

US Army Corps of Engineers
Chicago District

SYMBOL	AMENDMENT DESCRIPTION	DATE APPROVED	SYMBOL	DESCRIPTION	DATE APPROVED

DESIGNED BY: JAG
DATE: AUG 2007
DRAWN BY: DB
SCALE: AS SHOWN
CHECKED BY: WK
SOLICITATION NUMBER: W912P6-07-B-0006
SUBMITTED BY: JOHN GROBOSKI
DATE:

U.S. ARMY ENGINEER DISTRICT
CORPS OF ENGINEERS
CHICAGO, ILLINOIS

LITTLE CALUMET RIVER, INDIANA
LOCAL FLOOD PROTECTION
STAGE V, PHASE 2 - LEVEE

CROSS SECTION
STA. 5S 12+00 to 5S 23+00

SHEET REFERENCE NUMBER:
C-27

PLOT DATE: 8/3/2007
FILENAME: D:\working\dms10534\LCS5C27.DGN

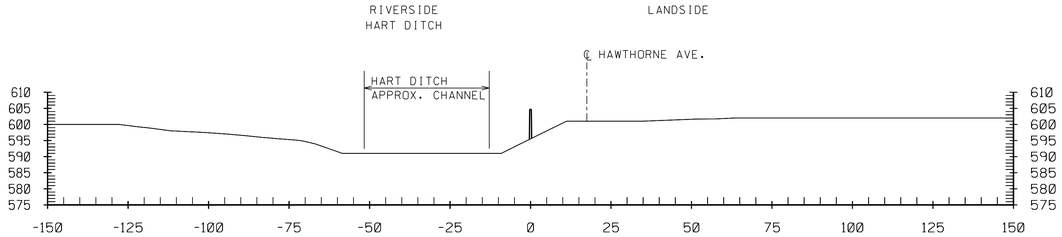

5S 29+00

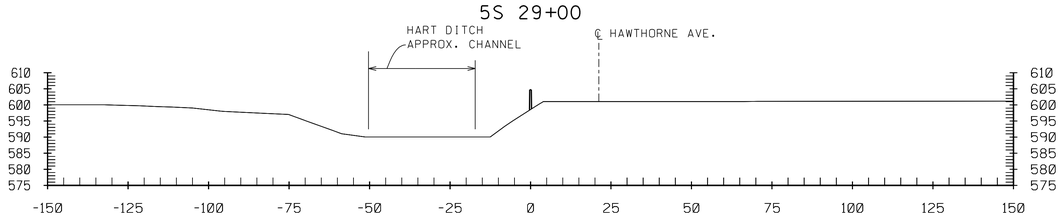

5S 28+00

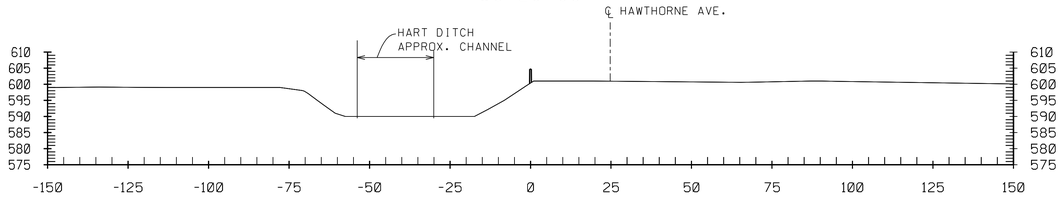

5S 27+00

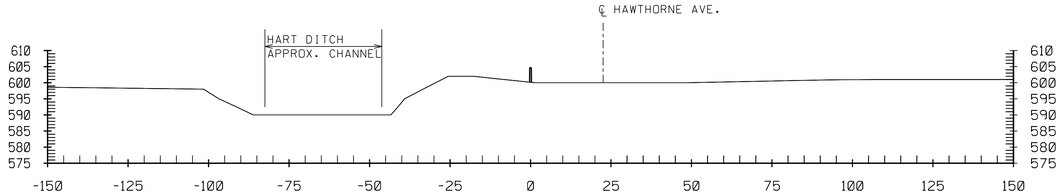

5S 26+00

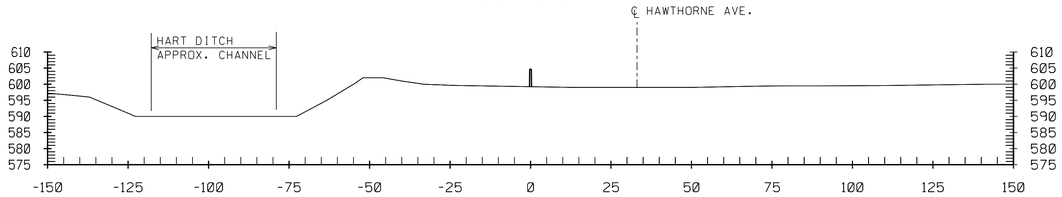

5S 25+00

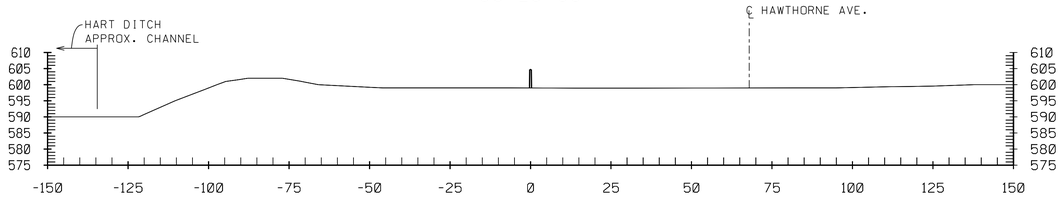

5S 24+00

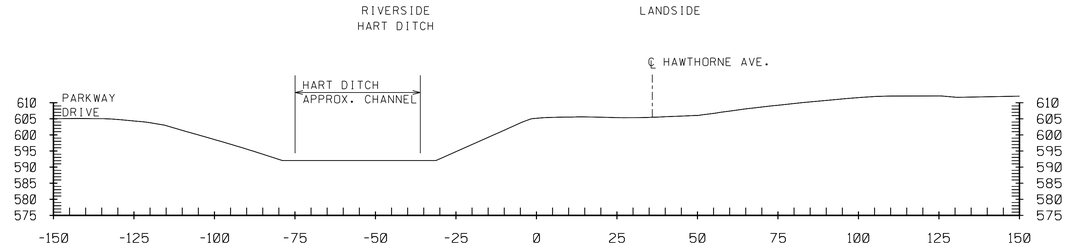

5S 33+66

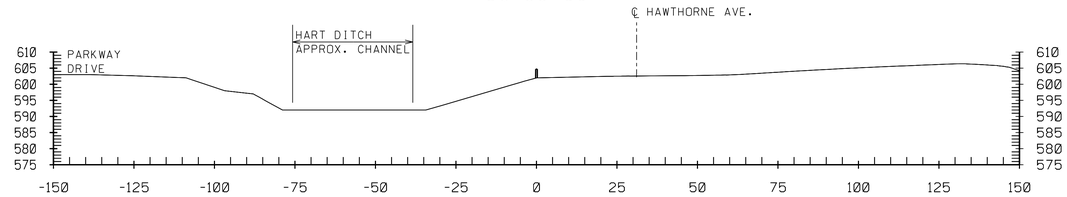

5S 33+00

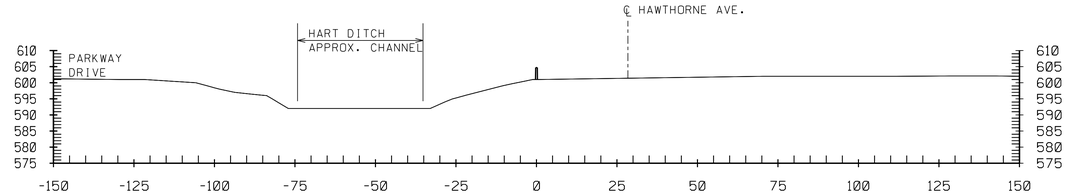

5S 32+00

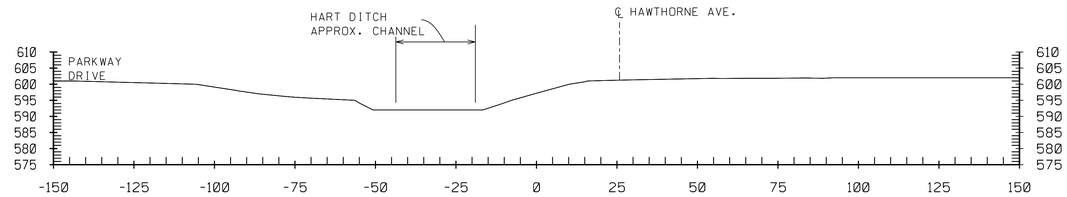

5S 31+00

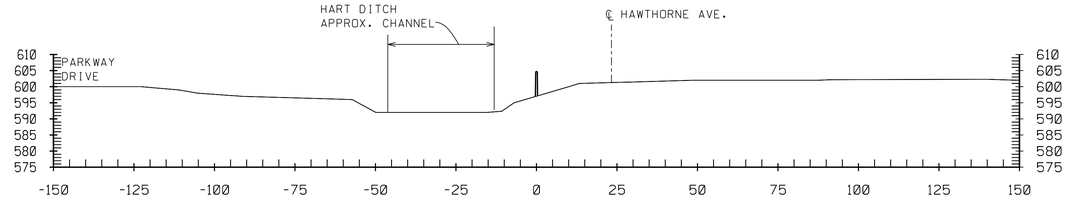

5S 30+00

NOTES:

1. FOR CONTROL POINTS AND WORKLIMITS SEE SHEET C-02.
2. FOR PLAN AND PROFILE SEE SHEET C-13.
3. FOR TYPICAL LEVEE AND DITCH SECTIONS SEE C-42
4. HYDROGRAPHIC SURVEY NOT TAKEN AT WATERWAYS. WATER SURFACE IS SHOWN AT TIME OF SURVEY.
5. APPROXIMATE LOCATIONS OF PLANAMETRICS ARE PROVIDED IN EACH SECTION. ALL FEATURES TO BE VERIFIED IN THE FIELD.

20' 10' 0 20'

SCALE: 1''= 20'-0"

US Army Corps of Engineers
Chicago District

SYMBOL	AMENDMENT DESCRIPTION	DATE APPROVED	SYMBOL	DESCRIPTION	DATE APPROVED

DESIGNED BY: JAG
DATE: AUG 2007
DRAWN BY: DB
SCALE: AS SHOWN
CHECKED BY: WK
SOLICITATION NUMBER: W912P6-07-B-0006
JOHN GROBOSKI
SUBMITTED BY:
DATE:

U.S. ARMY ENGINEER DISTRICT
CORPS OF ENGINEERS
CHICAGO, ILLINOIS

LITTLE CALUMET RIVER, INDIANA
LOCAL FLOOD PROTECTION
STAGE V, PHASE 2 - LEVEE

CROSS SECTION
STA. 5S 24+00 to 5S 33+66

SHEET REFERENCE NUMBER:
C-28

SHEET 32 OF 138

PLOT DATE: 8/3/2007
FILENAME: D:\working\dms10534\LCS5C28.DGN

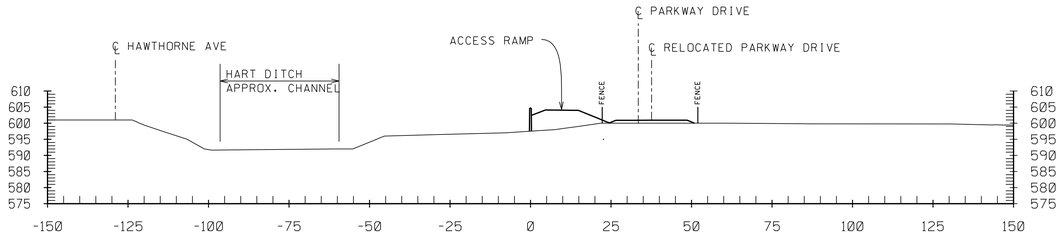

5S 39+00

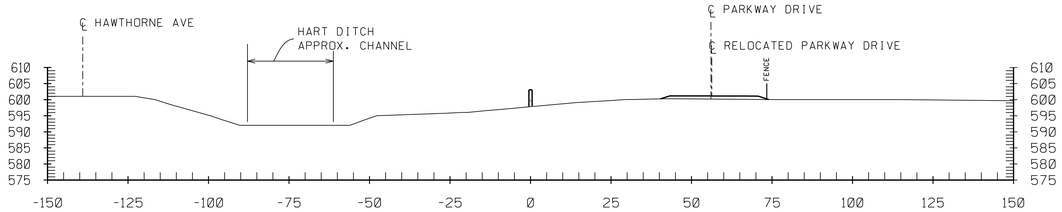

5S 38+00

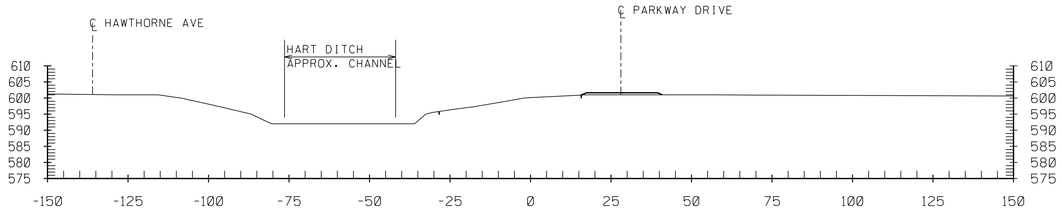

5S 37+00

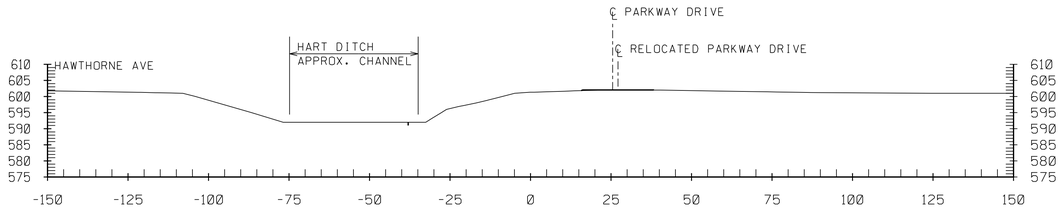

5S 36+00

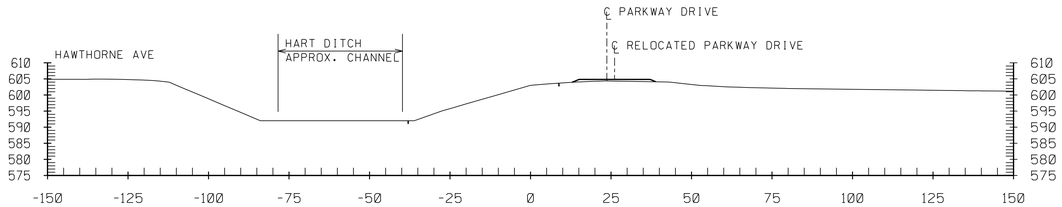

5S 35+00

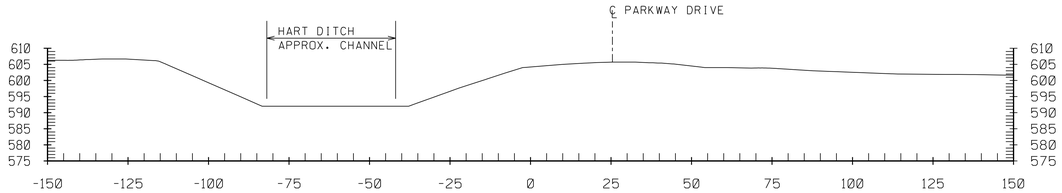

5S 34+69

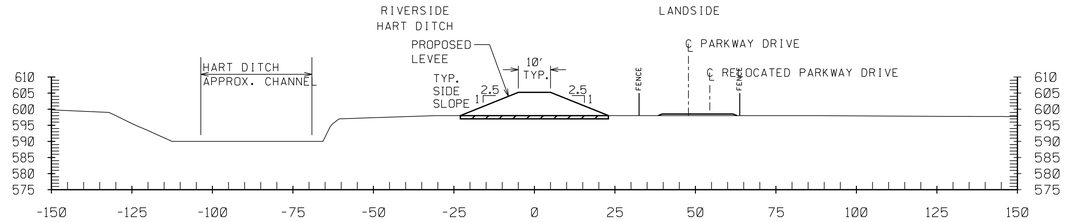

5S 45+00

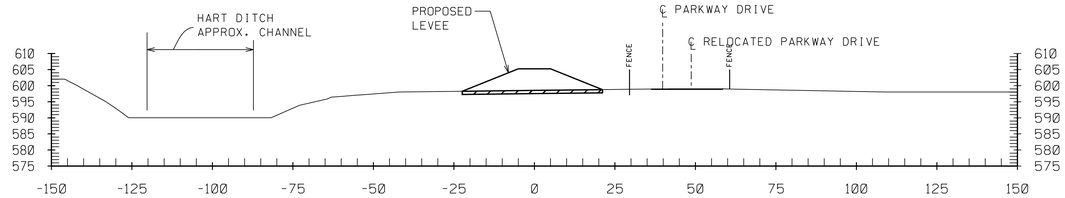

5S 44+00

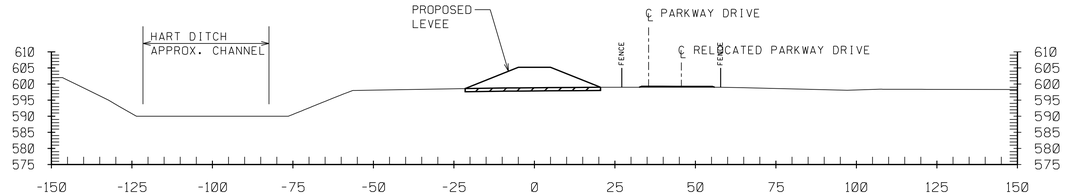

5S 43+00

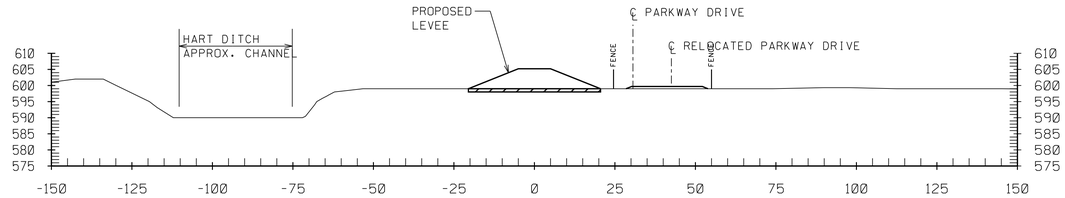

5S 42+00

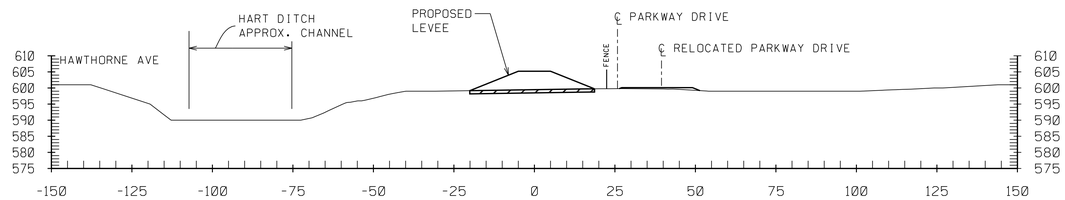

5S 41+00

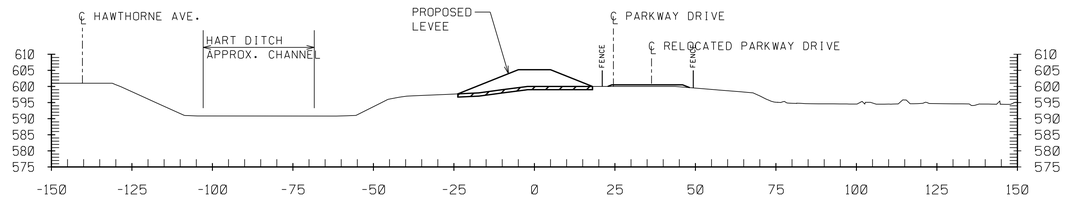

5S 40+00

NOTES:

1. FOR CONTROL POINTS AND WORKLIMITS SEE SHEET C-03.
2. FOR PLAN AND PROFILE SEE SHEET C-14.
3. FOR TYPICAL LEVEE AND DITCH SECTIONS SEE C-42
4. HYDROGRAPHIC SURVEY NOT TAKEN AT WATERWAYS. WATER SURFACE IS SHOWN AT TIME OF SURVEY.
5. APPROXIMATE LOCATIONS OF PLANAMETRICS ARE PROVIDED IN EACH SECTION. ALL FEATURES TO BE VERIFIED IN THE FIELD.

ONE FOOT STRIPPING

20' 10' 0 20'

SCALE: 1''= 20'-0"

US Army Corps of Engineers
Chicago District

SYMBOL	AMENDMENT DESCRIPTION	DATE APPROVED	SYMBOL	DESCRIPTION	DATE APPROVED

DESIGNED BY: JAG
DATE: AUG 2007
DRAWN BY: DB
SCALE: AS SHOWN
CHECKED BY: WK
SOLICITATION NUMBER: W912P6-07-B-0006
SUBMITTED BY: JOHN GROBOSKI
DATE:

U.S. ARMY ENGINEER DISTRICT
CORPS OF ENGINEERS
CHICAGO, ILLINOIS

LITTLE CALUMET RIVER, INDIANA
LOCAL FLOOD PROTECTION
STAGE V, PHASE 2 - LEVEE

CROSS SECTION
STA. 5S 34+69 to 5S 45+00

SHEET REFERENCE NUMBER:
C-29
SHEET 33 OF 138

PLOT DATE: 8/6/2007
FILENAME: D:\working\sms10534\LCS5C29.DGN

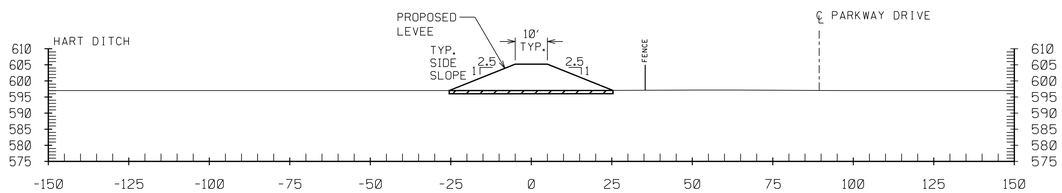

5S 51+00

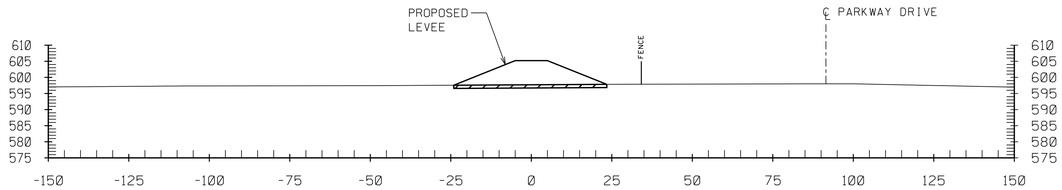

5S 50+00

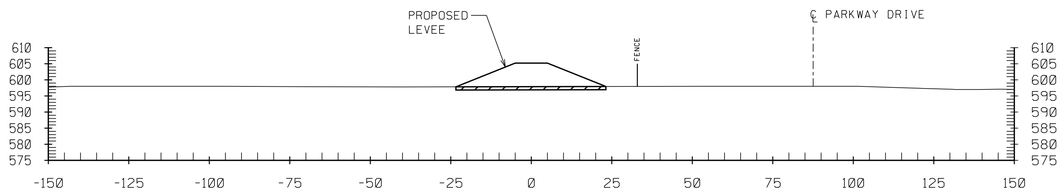

5S 49+00

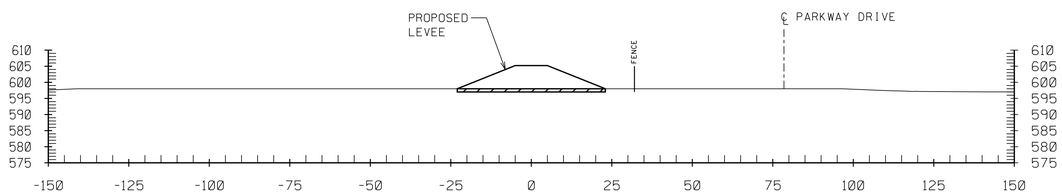

5S 48+00

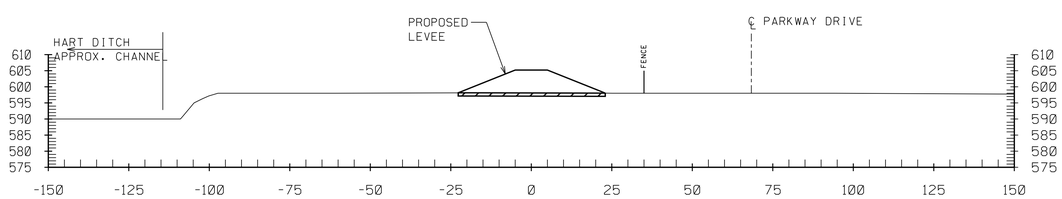

5S 47+00

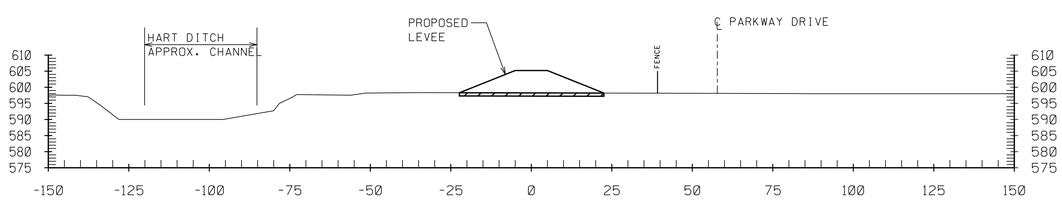

5S 46+00

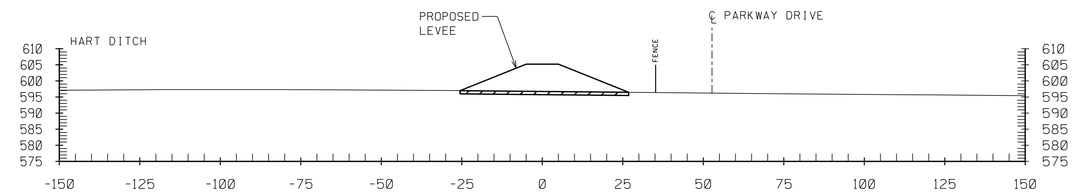

5S 57+00

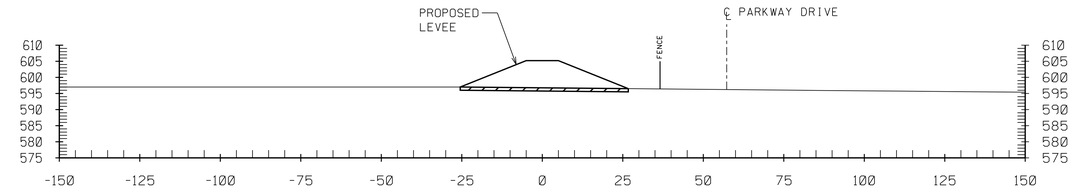

5S 56+00

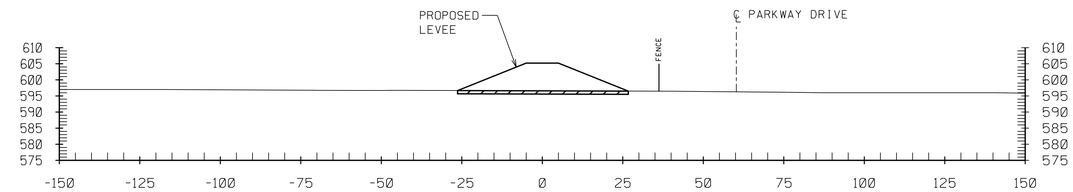

5S 55+00

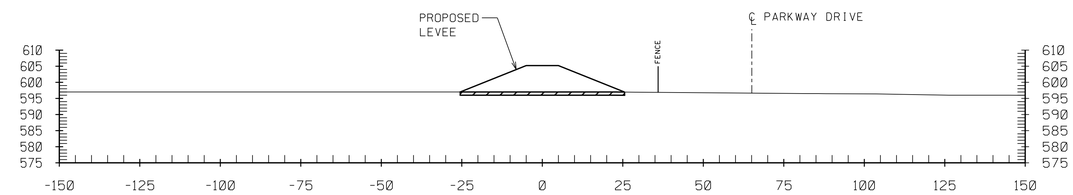

5S 54+00

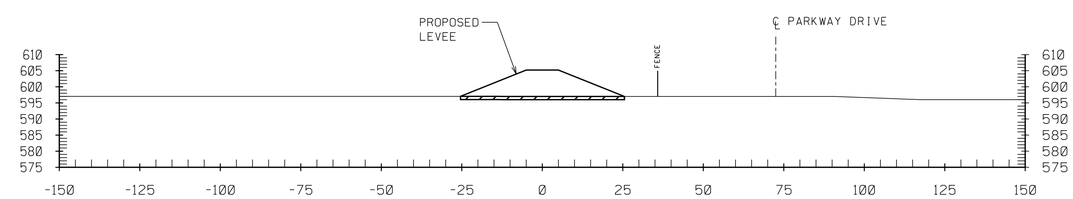

5S 53+00

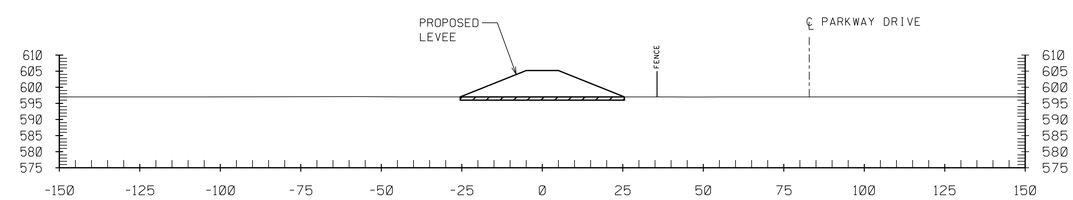

5S 52+00

NOTES:

1. FOR CONTROL POINTS AND WORKLIMITS SEE SHEET C-03.
2. FOR PLAN AND PROFILE SEE SHEET C-15.
3. FOR TYPICAL LEVEE AND DITCH SECTIONS SEE C-42
4. HYDROGRAPHIC SURVEY NOT TAKEN AT WATERWAYS. WATER SURFACE IS SHOWN AT TIME OF SURVEY.
5. APPROXIMATE LOCATIONS OF PLANAMETRICS ARE PROVIDED IN EACH SECTION. ALL FEATURES TO BE VERIFIED IN THE FIELD.

ONE FOOT STRIPPING

20' 10' 0 20'

SCALE: 1'' = 20'-0"

US Army Corps of Engineers
Chicago District

SYMBOL	AMENDMENT DESCRIPTION	DATE APPROVED	SYMBOL	DESCRIPTION	DATE APPROVED

DESIGNED BY: JAG
DATE: AUG 2007
DRAWN BY: DB
SCALE: AS SHOWN
CHECKED BY: WK
SOLICITATION NUMBER: W912P6-07-B-0006
SUBMITTED BY: JOHN GROBOSKI
DATE:

U.S. ARMY ENGINEER DISTRICT
CORPS OF ENGINEERS
CHICAGO, ILLINOIS

LITTLE CALUMET RIVER, INDIANA
LOCAL FLOOD PROTECTION
STAGE V, PHASE 2 - LEVEE

CROSS SECTION
STA. 5S 46+00 to 5S 56+00

SHEET REFERENCE NUMBER:
C-30

PLOT DATE: 8/3/2007
FILENAME: D:\working\dms10534\LCS5C30.DGN

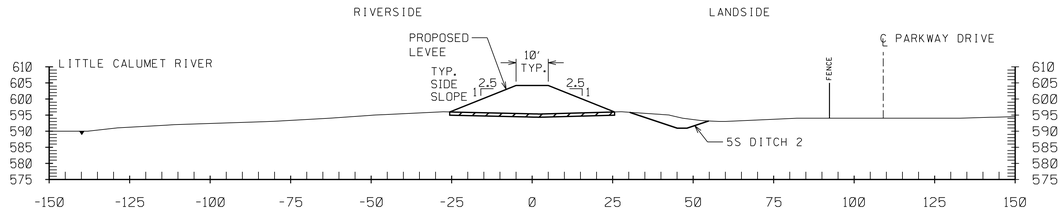

5S 63+00

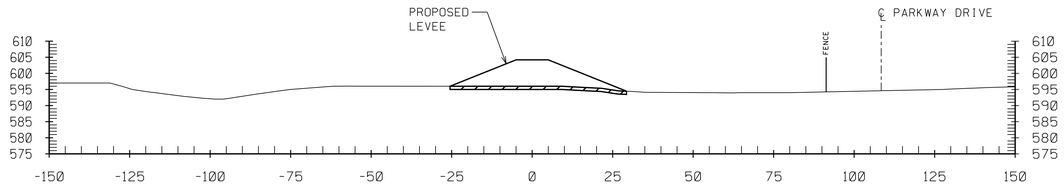

5S 62+00

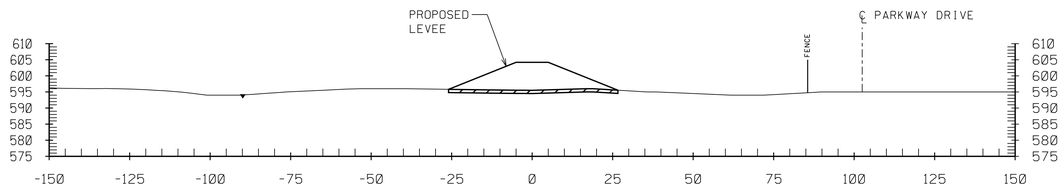

5S 61+00

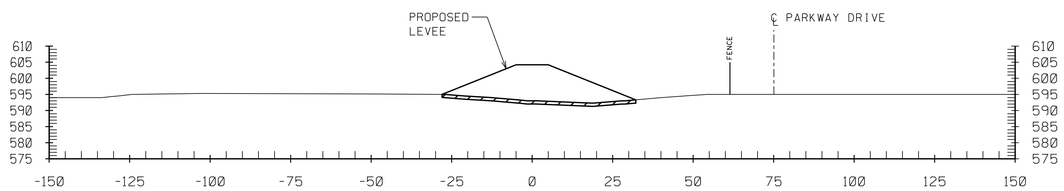

5S 60+00

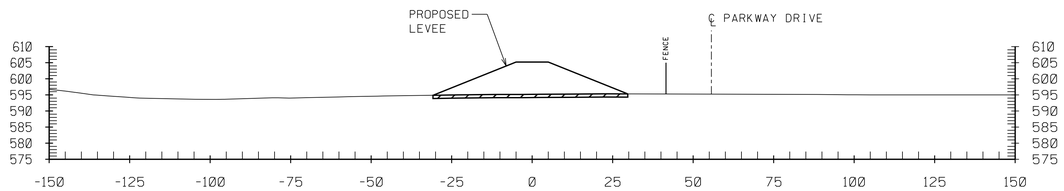

5S 59+00

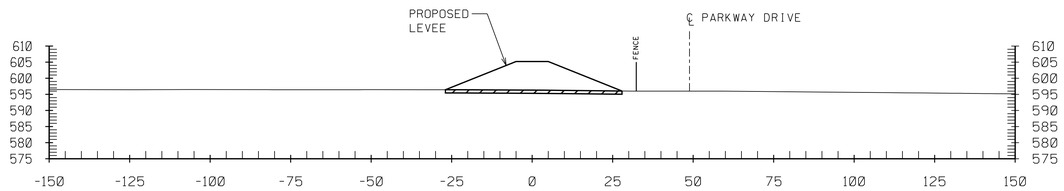

5S 58+00

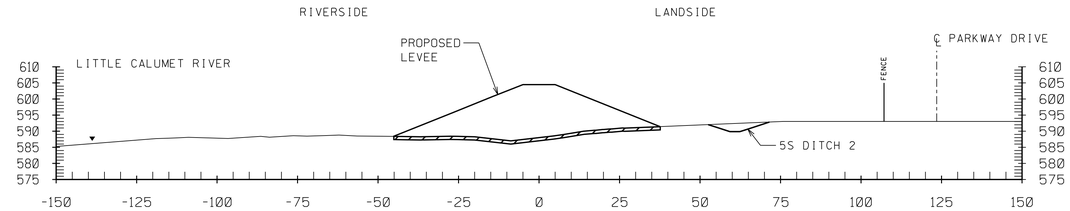

5S 69+00

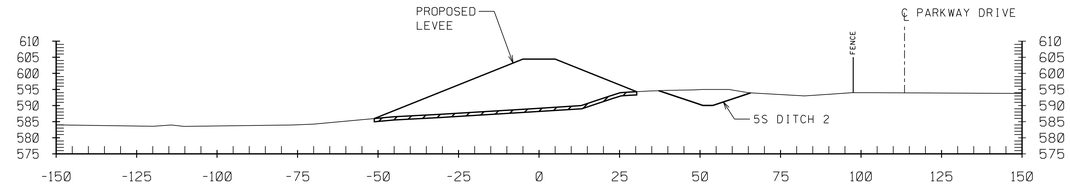

5S 68+00

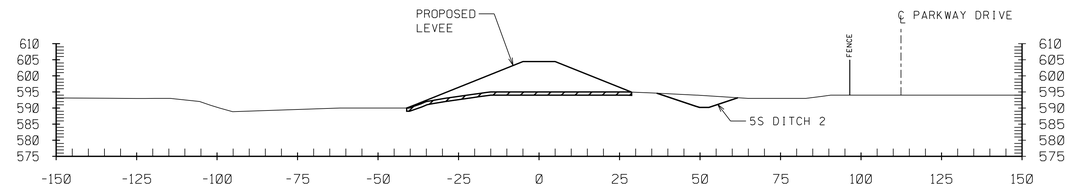

5S 67+00

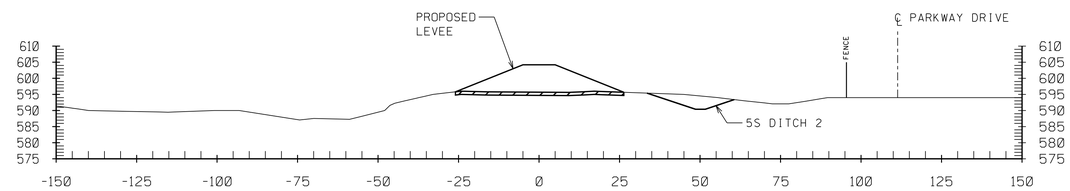

5S 66+00

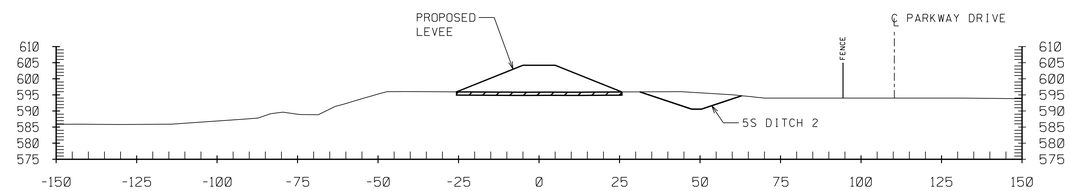

5S 65+00

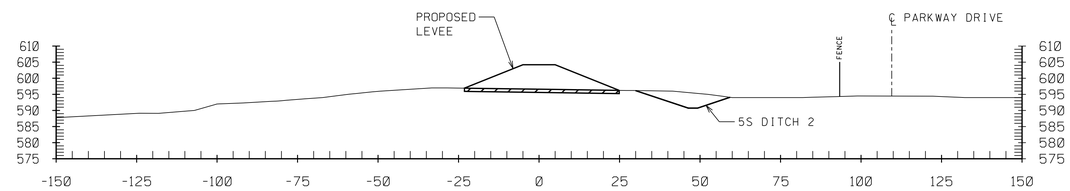

5S 64+00

NOTES:

1. FOR CONTROL POINTS AND WORKLIMITS SEE SHEET C-03 & C-04.
2. FOR PLAN AND PROFILE SEE SHEET C-15 & C-16.
3. FOR TYPICAL LEVEE AND DITCH SECTIONS SEE C-42
4. HYDROGRAPHIC SURVEY NOT TAKEN AT WATERWAYS. WATER SURFACE IS SHOWN AT TIME OF SURVEY.
5. APPROXIMATE LOCATIONS OF PLANAMETRICS ARE PROVIDED IN EACH SECTION. ALL FEATURES TO BE VERIFIED IN THE FIELD.

ONE FOOT STRIPPING

20' 10' 0 20'

SCALE: 1'' = 20'-0"

US Army Corps of Engineers
Chicago District

SYMBOL	AMENDMENT DESCRIPTION	DATE APPROVED	SYMBOL	DESCRIPTION	DATE APPROVED

DESIGNED BY: JAG
DATE: AUG 2007
DRAWN BY: DB
SCALE: AS SHOWN
CHECKED BY: WK
SOLICITATION NUMBER: W912P6-07-B-0006
SUBMITTED BY: JOHN GROBOSKI
DATE:

U.S. ARMY ENGINEER DISTRICT
CORPS OF ENGINEERS
CHICAGO, ILLINOIS

LITTLE CALUMET RIVER, INDIANA
LOCAL FLOOD PROTECTION
STAGE V, PHASE 2 - LEVEE

CROSS SECTION
STA. 5S 58+00 to 5S 69+00

SHEET REFERENCE NUMBER:
C-31
SHEET 35 OF 138

PLOT DATE: 8/3/2007
FILENAME: D:\working\dms10534\CS5C31.DGN

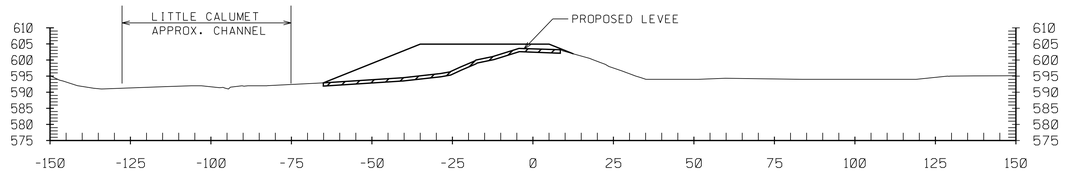

5S 74+37

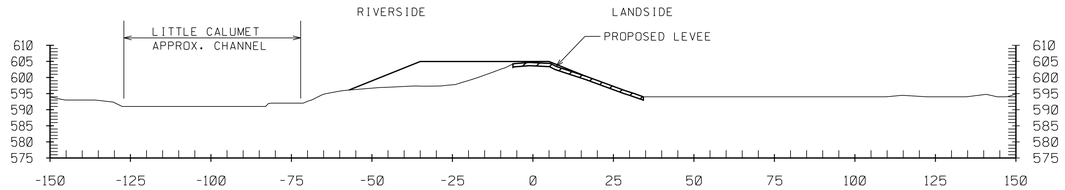

5S 74+00

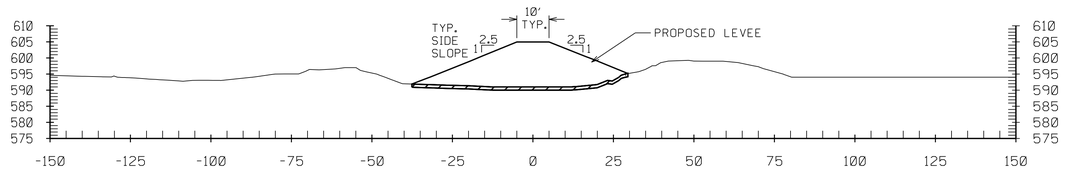

5S 73+00

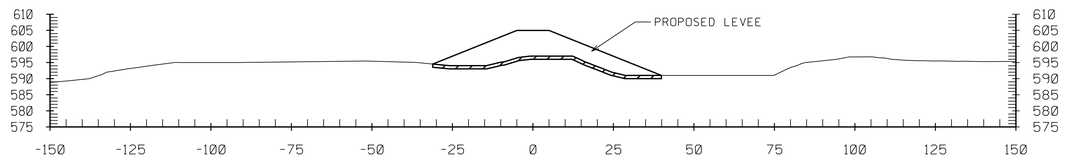

5S 72+00

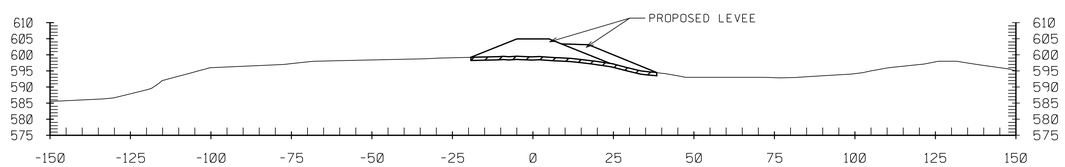

5S 71+00

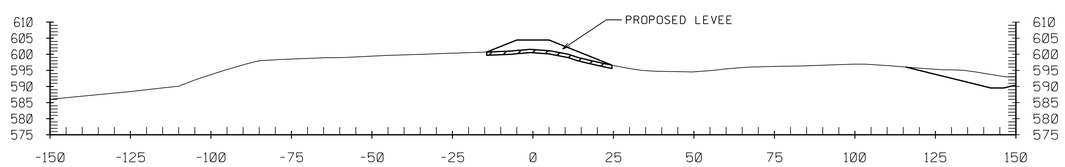

5S 70+00

NOTES:

1. FOR CONTROL POINTS AND WORKLIMITS SEE SHEET C-04.
2. FOR PLAN AND PROFILE SEE SHEET C-16 & C-17.
3. FOR TYPICAL LEVEE AND DITCH SECTIONS SEE C-42
4. HYDROGRAPHIC SURVEY NOT TAKEN AT WATERWAYS. WATER SURFACE IS SHOWN AT TIME OF SURVEY.
5. APPROXIMATE LOCATIONS OF PLANAMETRICS ARE PROVIDED IN EACH SECTION. ALL FEATURES TO BE VERIFIED IN THE FIELD.

ONE FOOT STRIPPING

20' 10' 0 20'

SCALE: 1''= 20'-0"

US Army Corps of Engineers
Chicago District

SYMBOL	AMENDMENT DESCRIPTION	DATE APPROVED	SYMBOL	DESCRIPTION	DATE APPROVED

DESIGNED BY: JAG
DATE: AUG 2007
DRAWN BY: DB
SCALE: AS SHOWN
CHECKED BY: WK
SOLICITATION NUMBER: W912P6-07-B-0006
JOHN GROBOSKI
SUBMITTED BY:
DATE:

U.S. ARMY ENGINEER DISTRICT
CORPS OF ENGINEERS
CHICAGO, ILLINOIS

LITTLE CALUMET RIVER, INDIANA
LOCAL FLOOD PROTECTION
STAGE V, PHASE 2 - LEVEE

CROSS SECTION
STA. 5S 70+00 to 5S 74+37

SHEET REFERENCE NUMBER:
C-32

PLOT DATE: 8/3/2007
FILENAME: D:\working\dms10534\LCS5C32.DGN

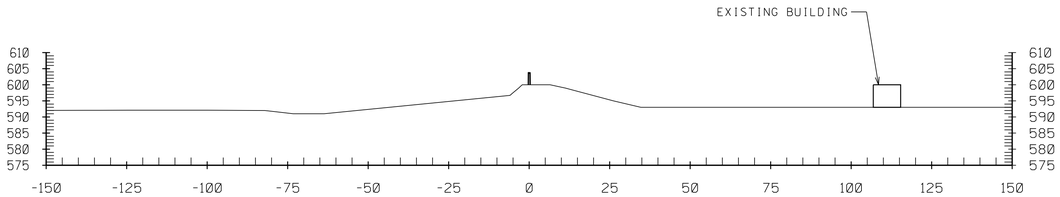

6S 5+00

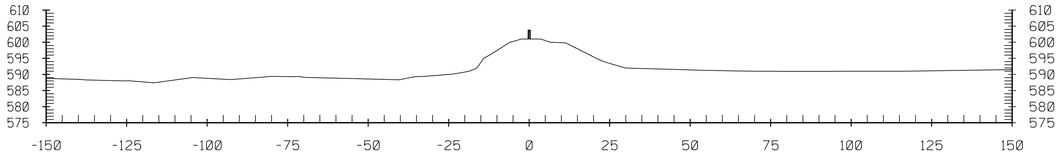

6S 4+00

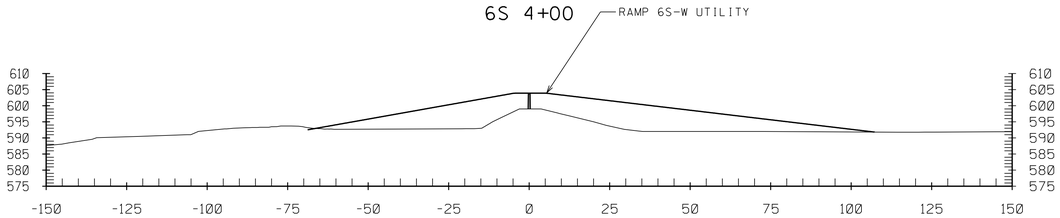

6S 3+00

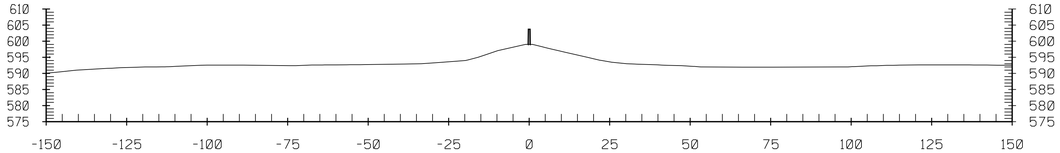

6S 2+00

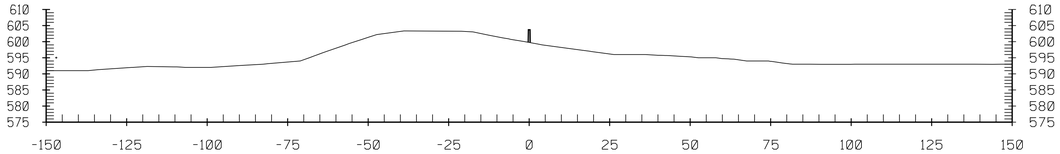

6S 1+00

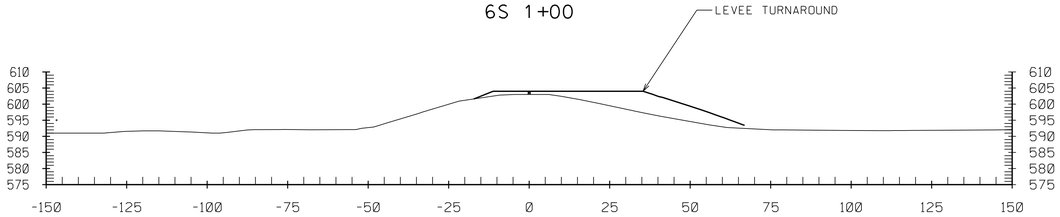

6S 0+00

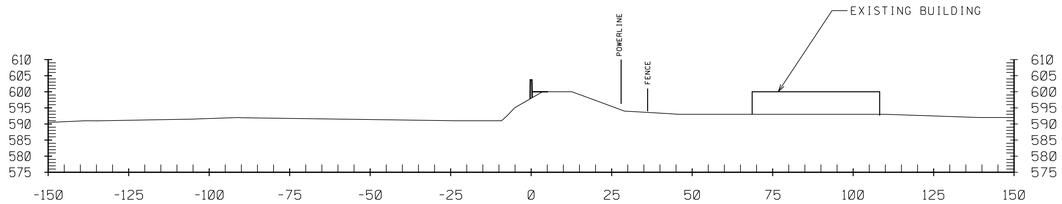

6S 11+00

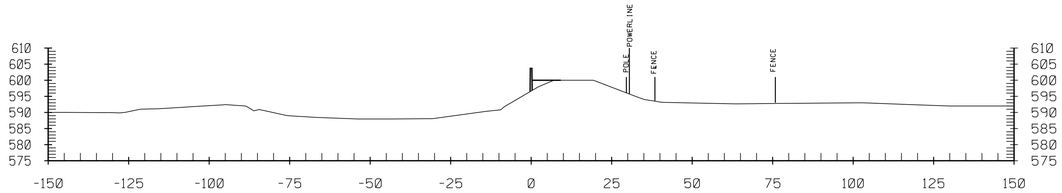

6S 10+00

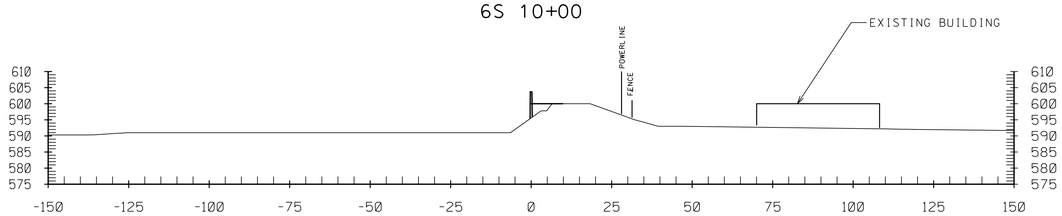

6S 9+00

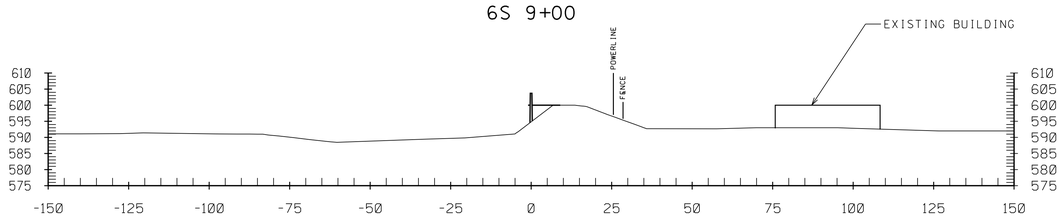

6S 8+00

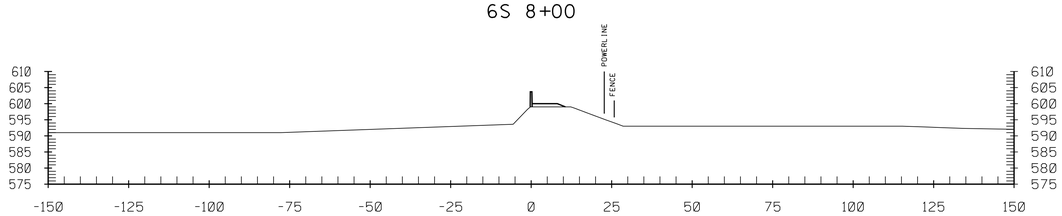

6S 7+00

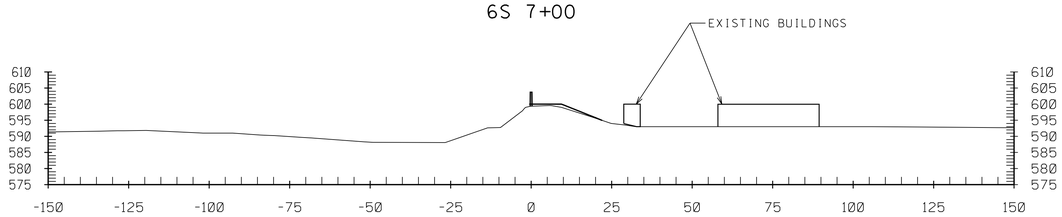

6S 6+00

NOTES:

1. FOR CONTROL POINTS AND WORKLIMITS SEE SHEET C-05.
2. FOR PLAN AND PROFILE SEE SHEET C-18.
3. FOR TYPICAL LEVEE AND DITCH SECTIONS SEE C-42
4. HYDROGRAPHIC SURVEY NOT TAKEN AT WATERWAYS. WATER SURFACE IS SHOWN AT TIME OF SURVEY.
5. APPROXIMATE LOCATIONS OF PLANAMETRICS ARE PROVIDED IN EACH SECTION. ALL FEATURES TO BE VERIFIED IN THE FIELD.

20' 10' 0 20'

SCALE: 1'' = 20'-0"

US Army Corps of Engineers
Chicago District

SYMBOL	AMENDMENT DESCRIPTION	DATE APPROVED	SYMBOL	DESCRIPTION	DATE APPROVED

DESIGNED BY: JAG
DATE: AUG 2007
DRAWN BY: DB
SCALE: AS SHOWN
CHECKED BY: WK
SOLICITATION NUMBER: W912P6-07-B-0006
SUBMITTED BY: JOHN GROBOSKI
DATE:

U.S. ARMY ENGINEER DISTRICT
CORPS OF ENGINEERS
CHICAGO, ILLINOIS

LITTLE CALUMET RIVER, INDIANA
LOCAL FLOOD PROTECTION
STAGE V, PHASE 2 - LEVEE

CROSS SECTION
STA. 6S 0+00 to 6S 11+00

SHEET REFERENCE NUMBER:
C-33

PLOT DATE: 8/3/2007
FILENAME: D:\working\dms10534\LCS5C33.DGN

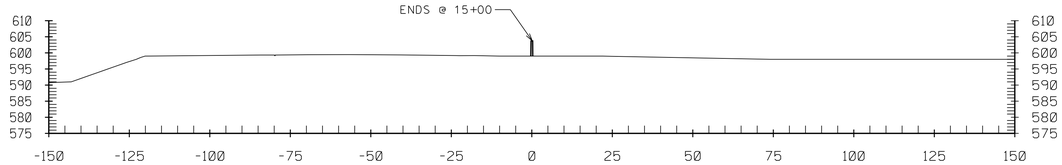

6S 15+45

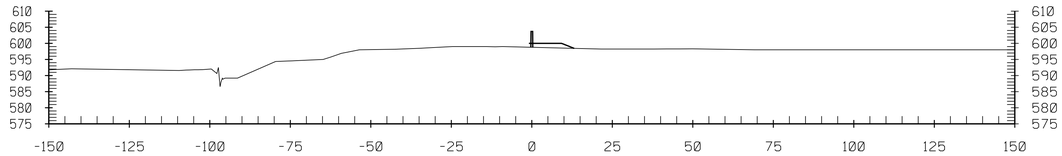

6S 15+00

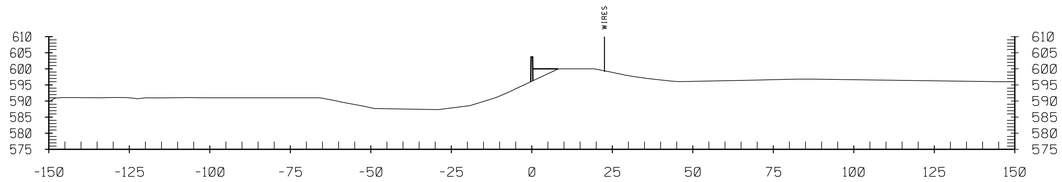

6S 14+00

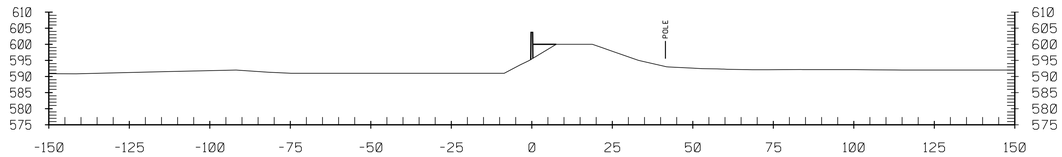

6S 13+00

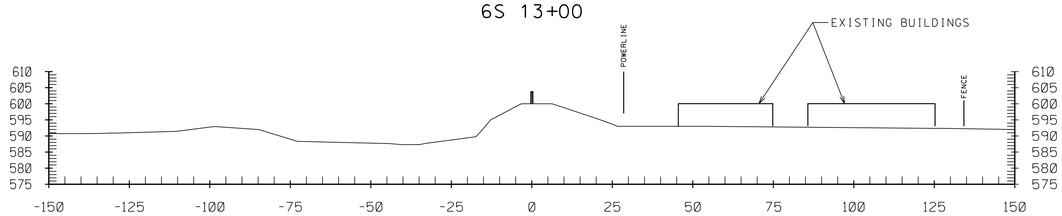

6S 12+00

NOTES:

1. FOR CONTROL POINTS AND WORKLIMITS SEE SHEET C-05.
2. FOR PLAN AND PROFILE SEE SHEET C-18.
3. FOR TYPICAL LEVEE AND DITCH SECTIONS SEE C-42
4. HYDROGRAPHIC SURVEY NOT TAKEN AT WATERWAYS. WATER SURFACE IS SHOWN AT TIME OF SURVEY.
5. APPROXIMATE LOCATIONS OF PLANAMETRICS ARE PROVIDED IN EACH SECTION. ALL FEATURES TO BE VERIFIED IN THE FIELD.

20' 10' 0 20'

SCALE: 1'' = 20'-0"

US Army Corps of Engineers
Chicago District

SYMBOL	AMENDMENT DESCRIPTION	DATE APPROVED	SYMBOL	DESCRIPTION	DATE APPROVED

U.S. ARMY ENGINEER DISTRICT
CORPS OF ENGINEERS
CHICAGO, ILLINOIS

DESIGNED BY: JAG
DATE: AUG 2007
DRAWN BY: DB
SCALE: AS SHOWN
CHECKED BY: WK
SOLICITATION NUMBER: W912P6-07-B-0006
SUBMITTED BY: JOHN GROBOSKI
DATE:

LITTLE CALUMET RIVER, INDIANA
LOCAL FLOOD PROTECTION
STAGE V, PHASE 2 - LEVEE

CROSS SECTION
STA. 6S 12+00 to 6S 15+06

SHEET REFERENCE NUMBER:
C-34

PLOT DATE: 8/3/2007
FILENAME: D:\working\dms10534\LCS5C34.DGN

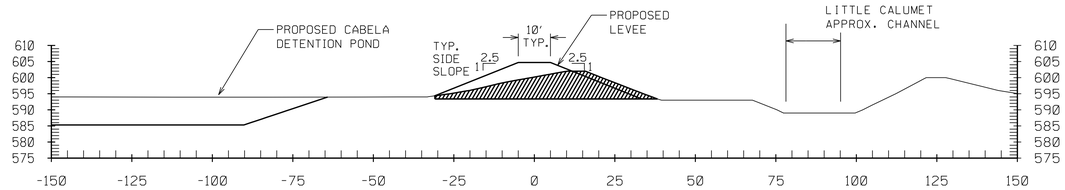

5N 5+00

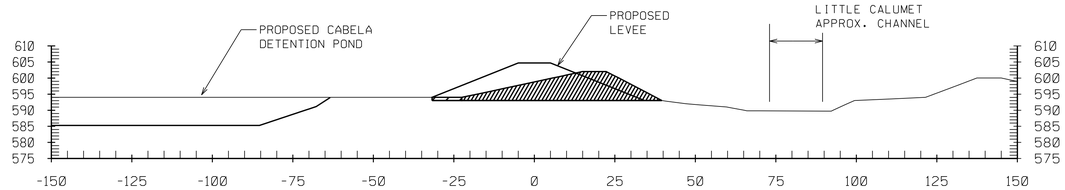

5N 4+00

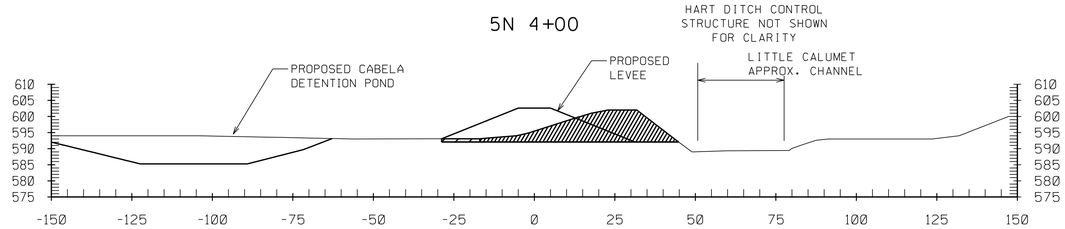

5N 3+00

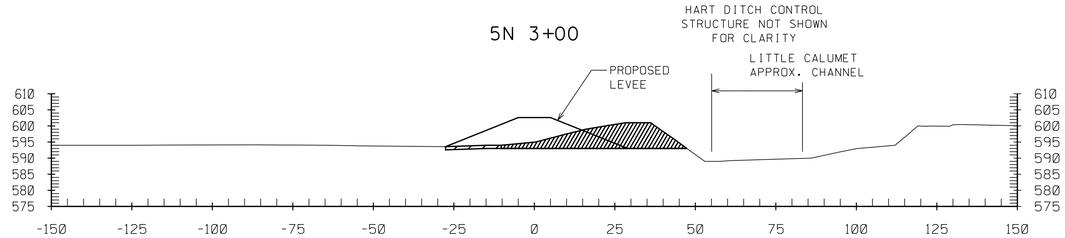

5N 2+00

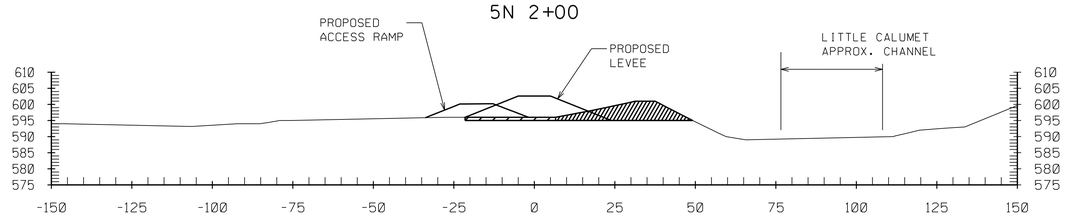

5N 1+00

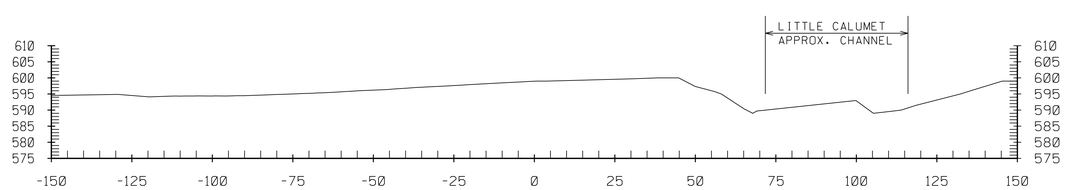

5N 0+00

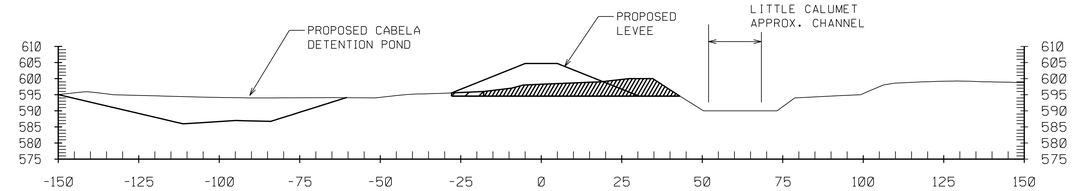

5N 11+00

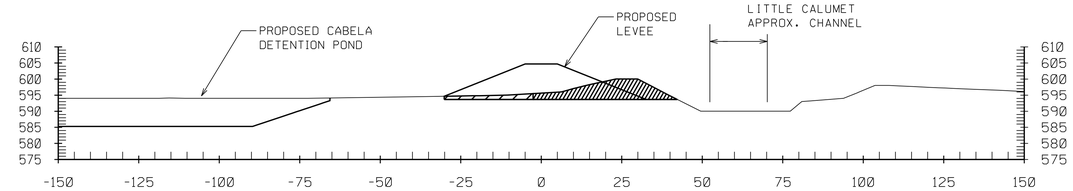

5N 10+00

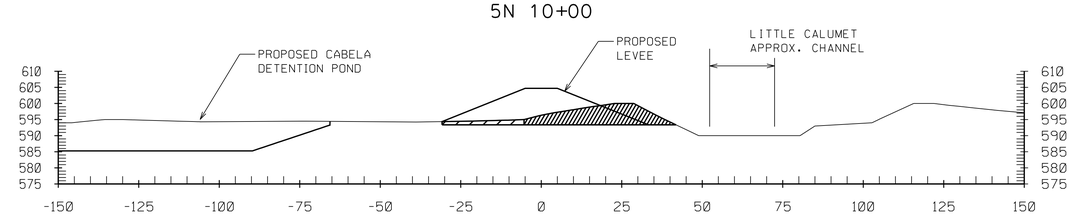

5N 9+00

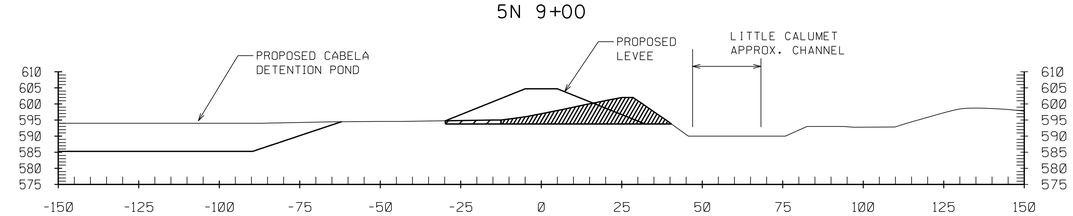

5N 8+00

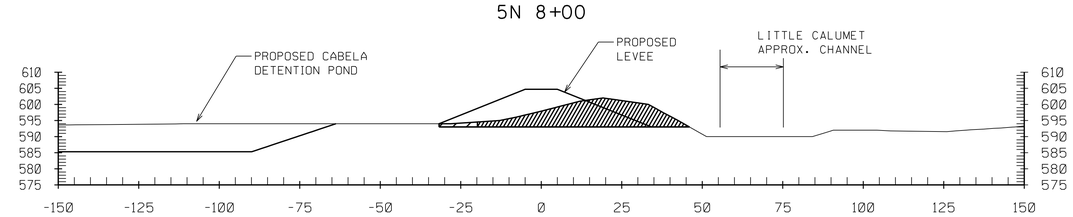

5N 7+00

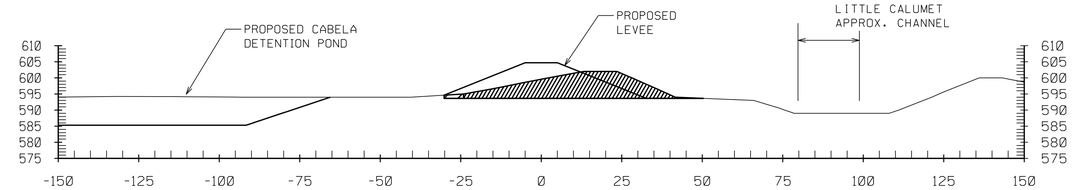

5N 6+00

NOTES:

1. FOR CONTROL POINTS AND WORKLIMITS SEE SHEET C-06.
2. FOR PLAN AND PROFILE SEE SHEET C-19.
3. FOR TYPICAL LEVEE AND DITCH SECTIONS SEE C-42
4. HYDROGRAPHIC SURVEY NOT TAKEN AT WATERWAYS. WATER SURFACE IS SHOWN AT TIME OF SURVEY.
5. APPROXIMATE LOCATIONS OF PLANAMETRICS ARE PROVIDED IN EACH SECTION. ALL FEATURES TO BE VERIFIED IN THE FIELD.

ONE FOOT STRIPPING

SPOIL BANK REMOVAL

20' 10' 0 20'

SCALE: 1'' = 20'-0"

US Army Corps of Engineers
Chicago District

SYMBOL	AMENDMENT DESCRIPTION	DATE APPROVED	SYMBOL	DESCRIPTION	DATE APPROVED

DESIGNED BY: JAG
DATE: AUG 2007
DRAWN BY: DB
SCALE: AS SHOWN
CHECKED BY: WK
SOLICITATION NUMBER: W912P6-07-B-0006
SUBMITTED BY: JOHN GROBOSKI
DATE:

U.S. ARMY ENGINEER DISTRICT
CORPS OF ENGINEERS
CHICAGO, ILLINOIS

LITTLE CALUMET RIVER, INDIANA
LOCAL FLOOD PROTECTION
STAGE V, PHASE 2 - LEVEE

CROSS SECTION
STA. 5N 0+00 to 5N 11+00

SHEET REFERENCE NUMBER:
C-35

SHEET 39 OF 138

PLOT DATE: 8/6/2007
FILENAME: C:\working\sms10534\LCS5C35.DGN

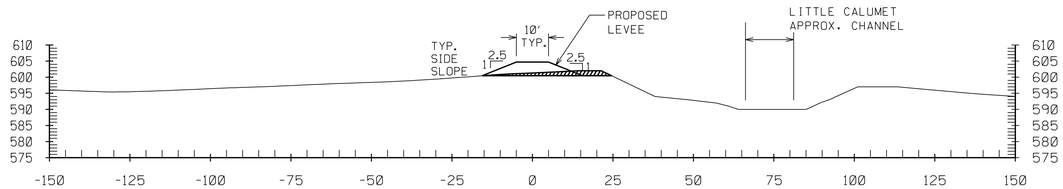

5N 17+00

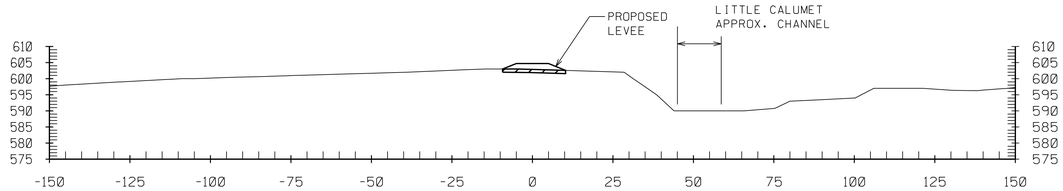

5N 16+00

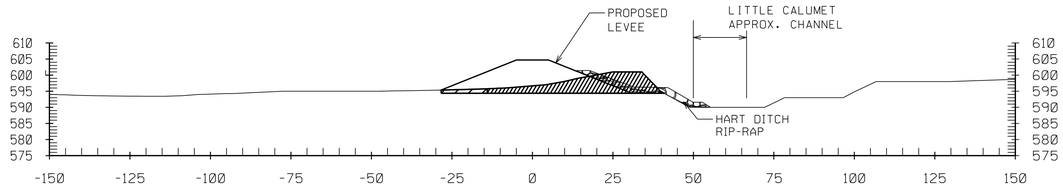

5N 15+00

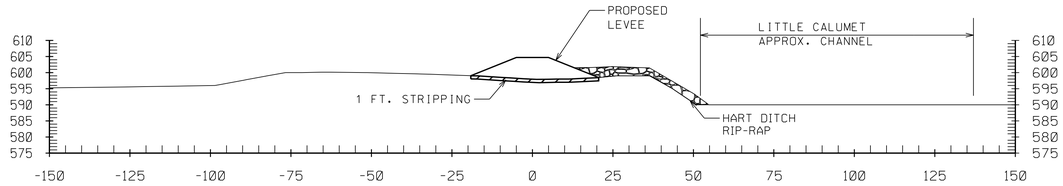

5N 14+00

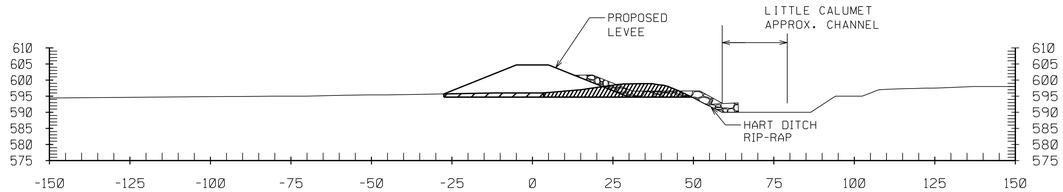

5N 13+00

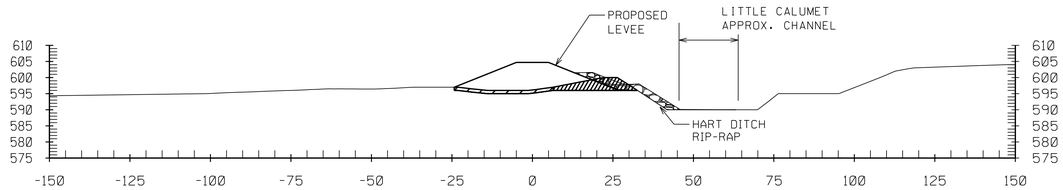

5N 12+00

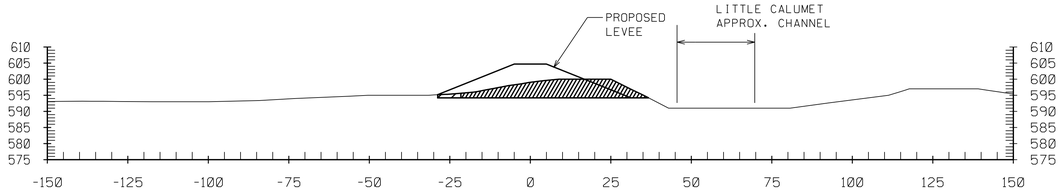

5N 23+00

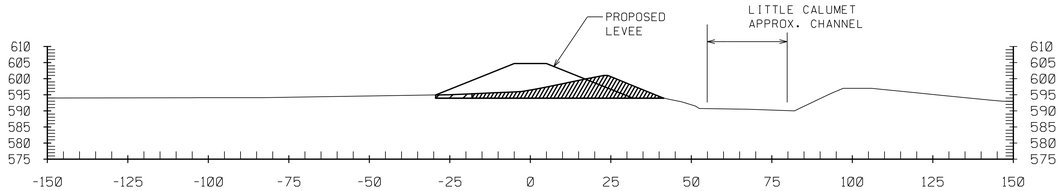

5N 22+00

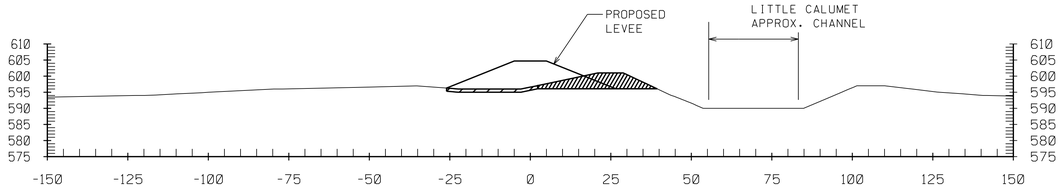

5N 21+00

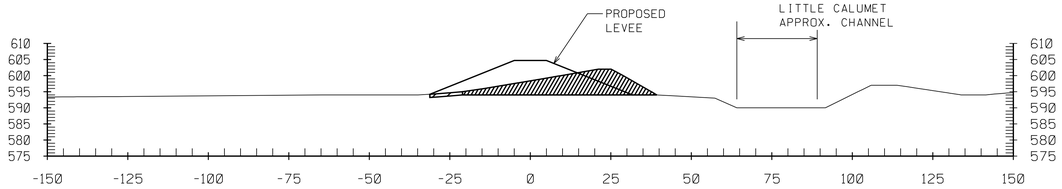

5N 20+00

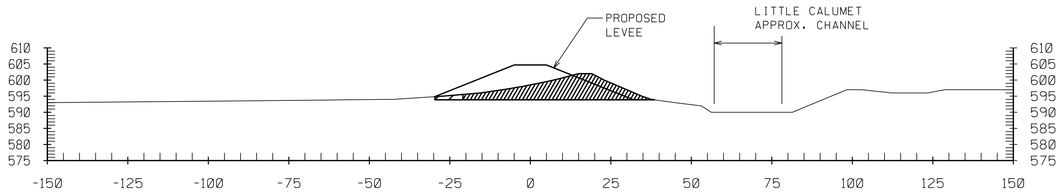

5N 19+00

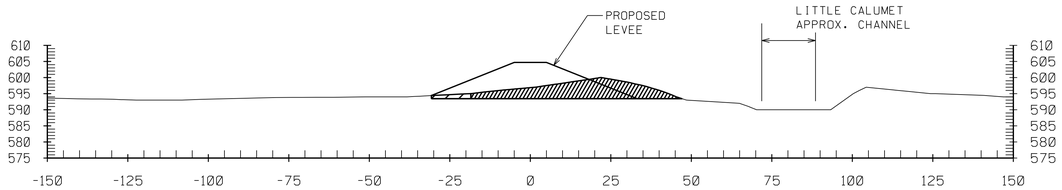

5N 18+00

NOTES:

1. FOR CONTROL POINTS AND WORKLIMITS SEE SHEET C-07 & C-08.
2. FOR PLAN AND PROFILE SEE SHEET C-20 & C-21.
3. FOR TYPICAL LEVEE AND DITCH SECTIONS SEE C-42
4. HYDROGRAPHIC SURVEY NOT TAKEN AT WATERWAYS. WATER SURFACE IS SHOWN AT TIME OF SURVEY.
5. APPROXIMATE LOCATIONS OF PLANAMETRICS ARE PROVIDED IN EACH SECTION. ALL FEATURES TO BE VERIFIED IN THE FIELD.

ONE FOOT STRIPPING

SPOIL BANK REMOVAL

20' 10' 0 20'

SCALE: 1'' = 20'-0"

US Army Corps of Engineers
Chicago District

SYMBOL	AMENDMENT DESCRIPTION	DATE APPROVED	SYMBOL	DESCRIPTION	DATE APPROVED

DESIGNED BY: JAG
DATE: AUG 2007
DRAWN BY: DB
SCALE: AS SHOWN
CHECKED BY: WK
SOLICITATION NUMBER: W912P6-07-B-0006
SUBMITTED BY: JOHN GROBOSKI
DATE:

U.S. ARMY ENGINEER DISTRICT
CORPS OF ENGINEERS
CHICAGO, ILLINOIS

LITTLE CALUMET RIVER, INDIANA
LOCAL FLOOD PROTECTION
STAGE V, PHASE 2 - LEVEE

CROSS SECTION
STA. 5N 12+00 to 5N 23+00

SHEET REFERENCE NUMBER:
C-36

PLOT DATE: 8/3/2007
FILENAME: D:\working\dms\0534\LCS5C36.DGN

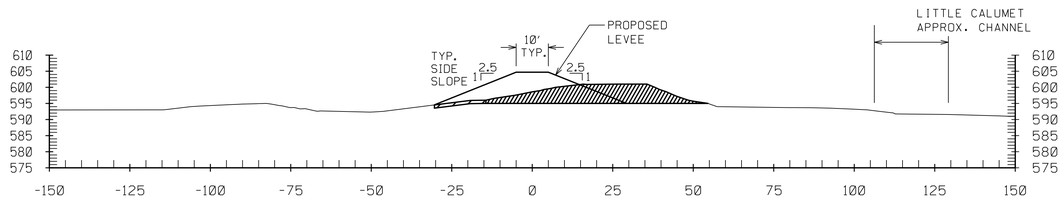

5N 29+00

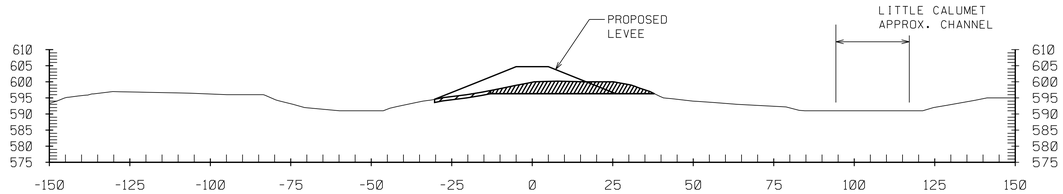

5N 28+00

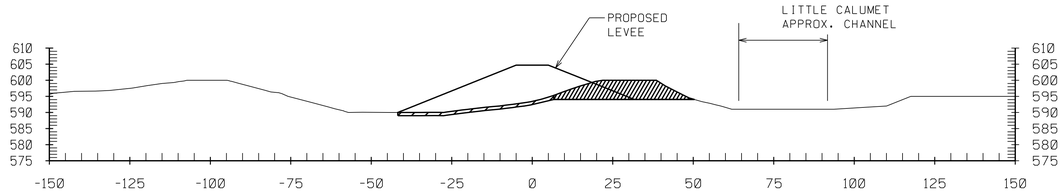

5N 27+00

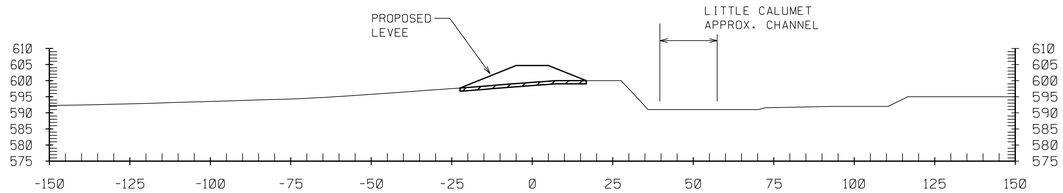

5N 26+00

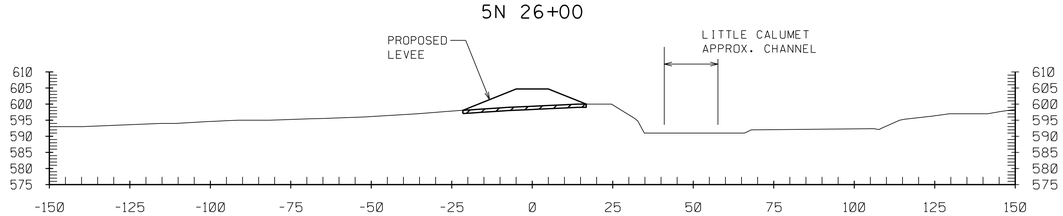

5N 25+00

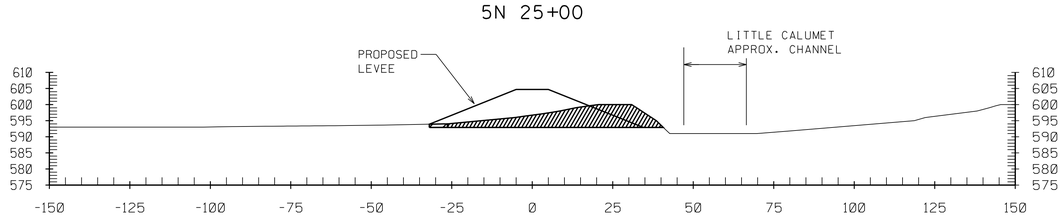

5N 24+00

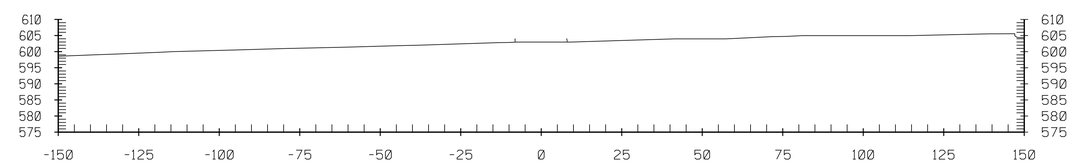

5N 31+79

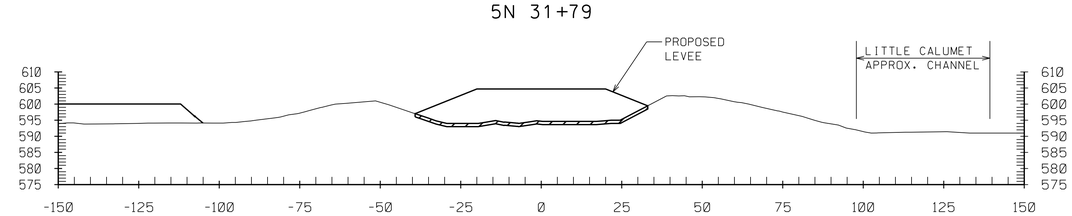

5N 31+00

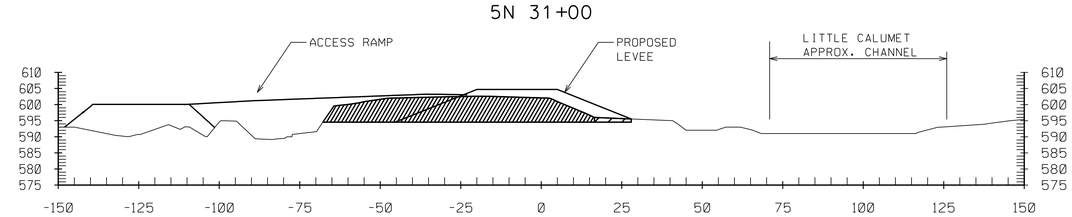

5N 30+00

NOTES:

1. FOR CONTROL POINTS AND WORKLIMITS SEE SHEET C-09.
2. FOR PLAN AND PROFILE SEE SHEET C-31.
3. FOR TYPICAL LEVEE AND DITCH SECTIONS SEE C-42
4. HYDROGRAPHIC SURVEY NOT TAKEN AT WATERWAYS. WATER SURFACE IS SHOWN AT TIME OF SURVEY.
5. APPROXIMATE LOCATIONS OF PLANAMETRICS ARE PROVIDED IN EACH SECTION. ALL FEATURES TO BE VERIFIED IN THE FIELD.

ONE FOOT STRIPPING

SPOIL BANK REMOVAL

20' 10' 0 20'

SCALE: 1'' = 20'-0"

US Army Corps of Engineers
Chicago District

SYMBOL	AMENDMENT DESCRIPTION	DATE APPROVED	SYMBOL	DESCRIPTION	DATE APPROVED

DESIGNED BY: JAG
DATE: AUG 2007
DRAWN BY: DB
SCALE: AS SHOWN
CHECKED BY: WK
SOLICITATION NUMBER: W912P6-07-B-0006
SUBMITTED BY: JOHN GROBOSKI
DATE:

U.S. ARMY ENGINEER DISTRICT
CORPS OF ENGINEERS
CHICAGO, ILLINOIS

LITTLE CALUMET RIVER, INDIANA
LOCAL FLOOD PROTECTION
STAGE V, PHASE 2 - LEVEE

CROSS SECTION
STA. 5N 24+00 to 5N 31+79

SHEET REFERENCE NUMBER:
C-37

SHEET 41 OF 138

PLOT DATE: 8/3/2007
FILENAME: D:\working\sms10534\LCS5C37.DGN

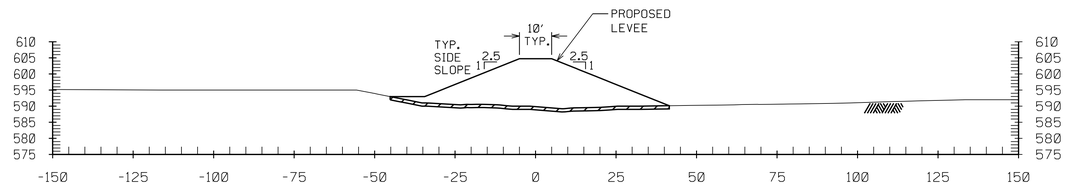

6N 5+00

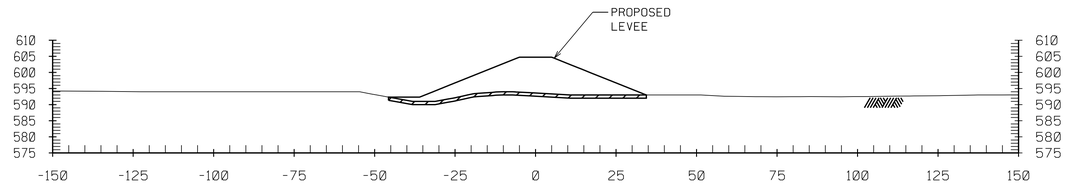

6N 4+00

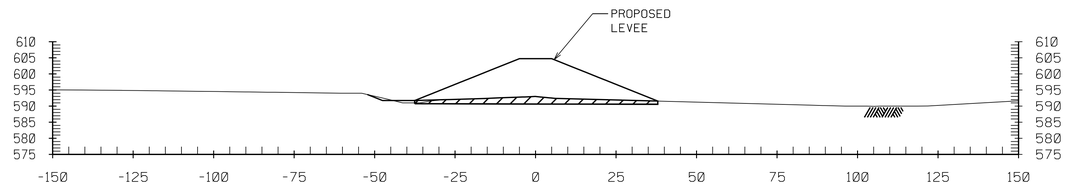

6N 3+00

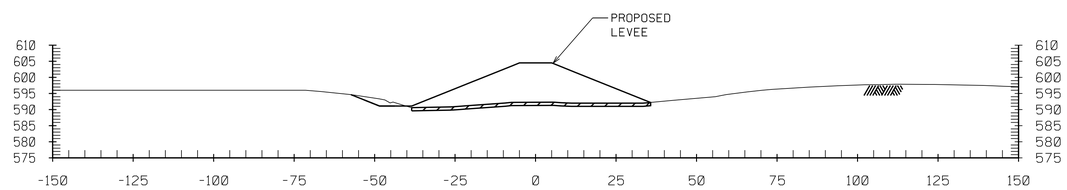

6N 2+00

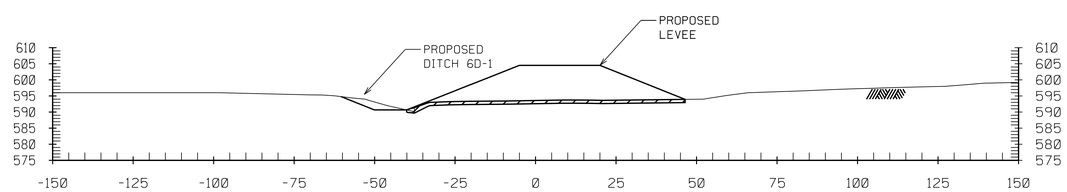

6N 1+00

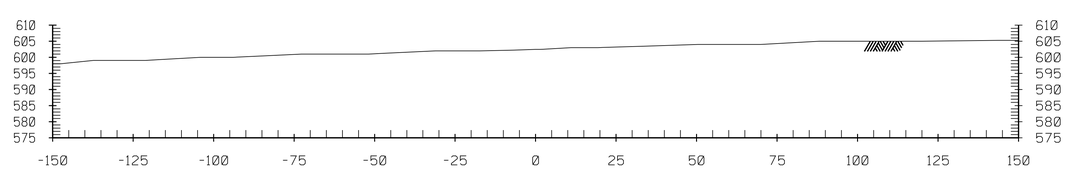

6N 0+00

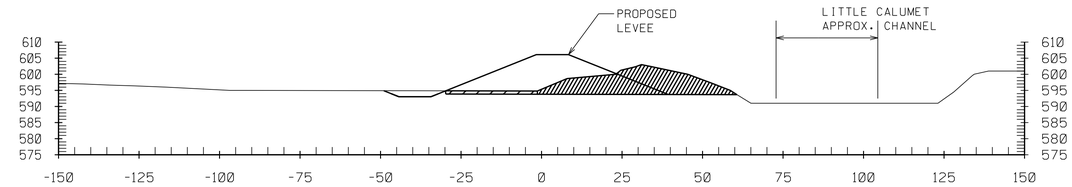

6N 11+00

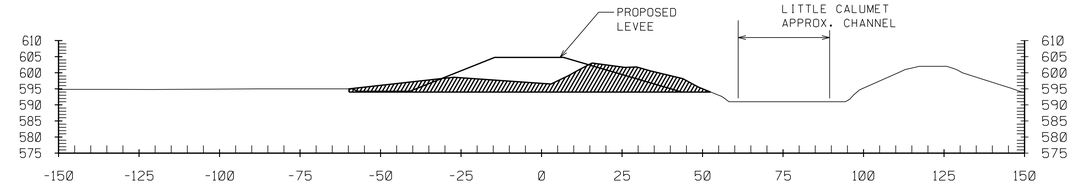

6N 10+00

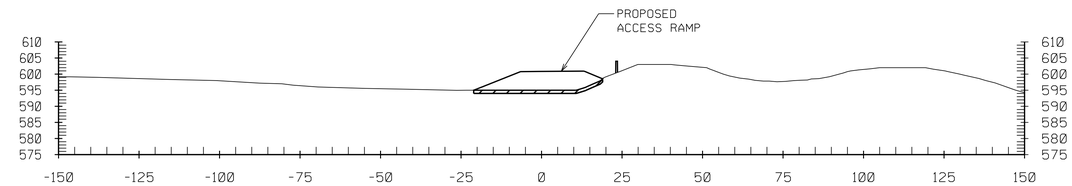

6N 9+00

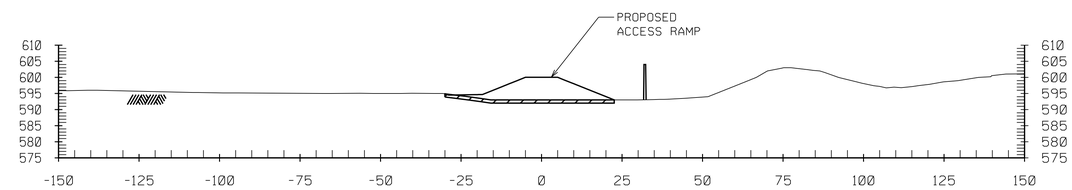

6N 8+00

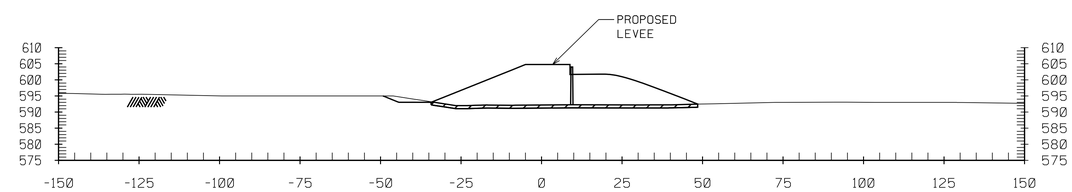

6N 7+00

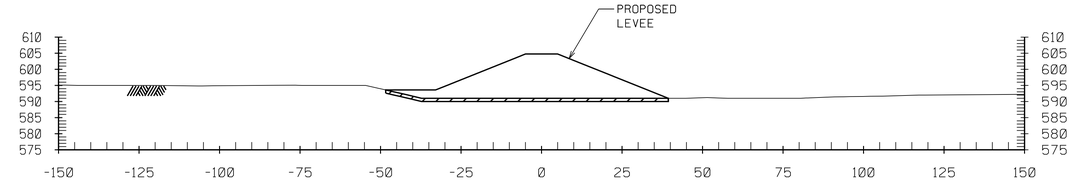

6N 6+00

NOTES:

1. FOR CONTROL POINTS AND WORKLIMITS SEE SHEET C-09.
2. FOR PLAN AND PROFILE SEE SHEET C-22.
3. FOR TYPICAL LEVEE AND DITCH SECTIONS SEE C-42
4. HYDROGRAPHIC SURVEY NOT TAKEN AT WATERWAYS. WATER SURFACE IS SHOWN AT TIME OF SURVEY.
5. APPROXIMATE LOCATIONS OF PLANAMETRICS ARE PROVIDED IN EACH SECTION. ALL FEATURES TO BE VERIFIED IN THE FIELD.

ONE FOOT STRIPPING

SPOIL BANK REMOVAL

20' 10' 0 20'

SCALE: 1'' = 20'-0"

US Army Corps of Engineers
Chicago District

SYMBOL	AMENDMENT DESCRIPTION	DATE APPROVED	SYMBOL	DESCRIPTION	DATE APPROVED

DESIGNED BY: JAG
DATE: AUG 2007
DRAWN BY: DB
SCALE: AS SHOWN
CHECKED BY: WK
SOLICITATION NUMBER: W912P6-07-B-0006
SUBMITTED BY: JOHN GROBOSKI
DATE:

U.S. ARMY ENGINEER DISTRICT
CORPS OF ENGINEERS
CHICAGO, ILLINOIS

LITTLE CALUMET RIVER, INDIANA
LOCAL FLOOD PROTECTION
STAGE V, PHASE 2 - LEVEE

CROSS SECTION
STA. 6N 0+00 to 6N 11+00

SHEET REFERENCE NUMBER:
C-38

SHEET 42 OF 138

PLOT DATE: 8/6/2007
FILENAME: D:\working\sms10534\LCS5C38.DGN

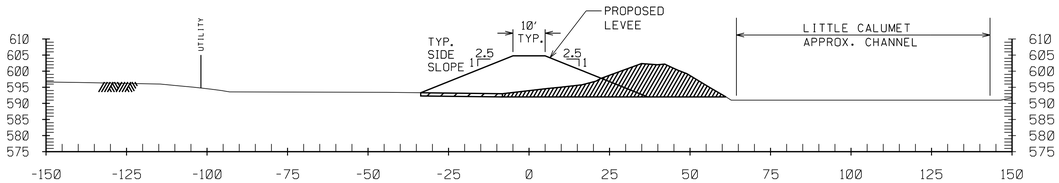

6N 17+00

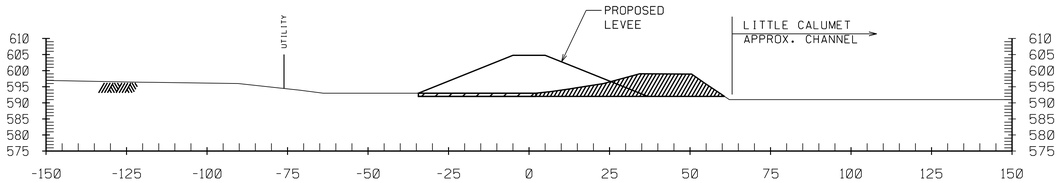

6N 16+00

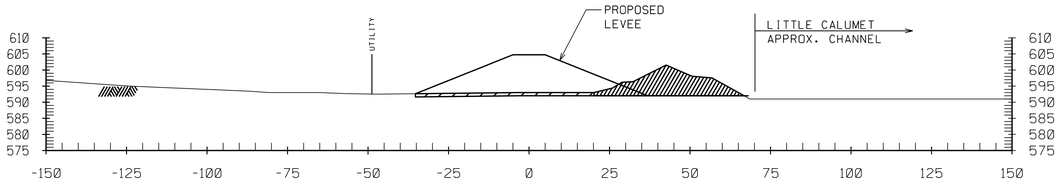

6N 15+00

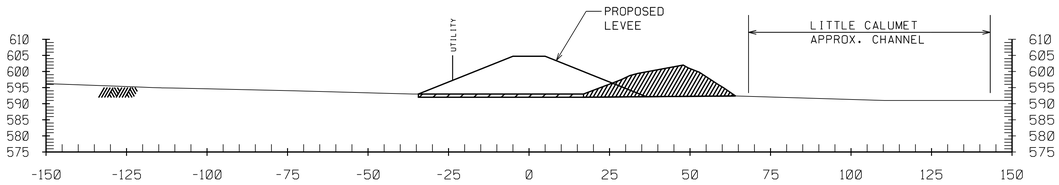

6N 14+00

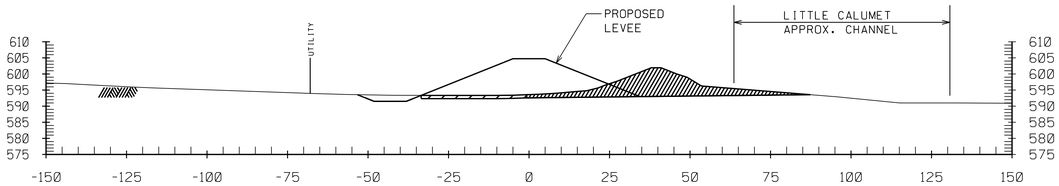

6N 13+00

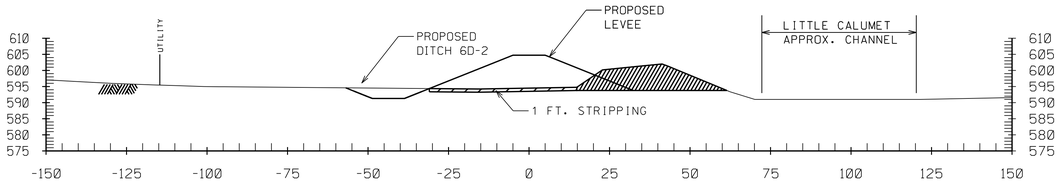

6N 12+00

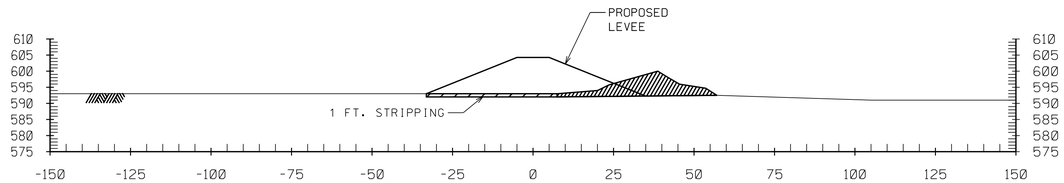

6N 23+00

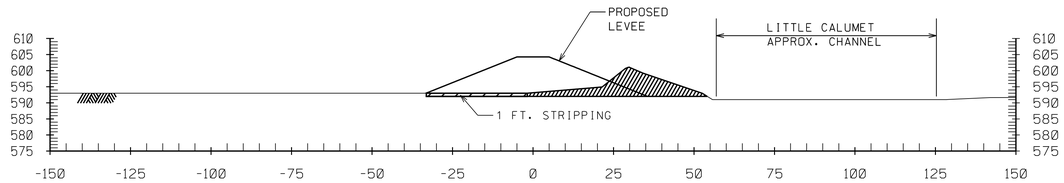

6N 22+00

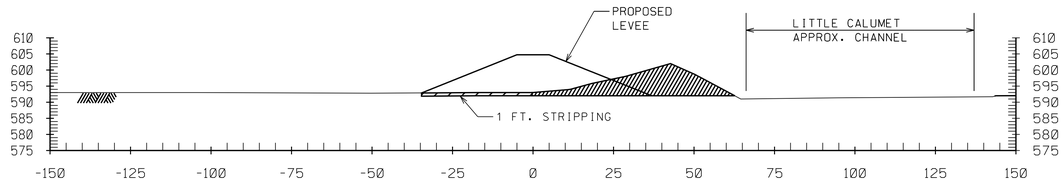

6N 21+00

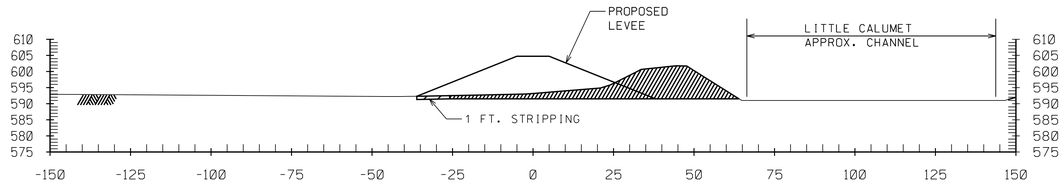

6N 20+00

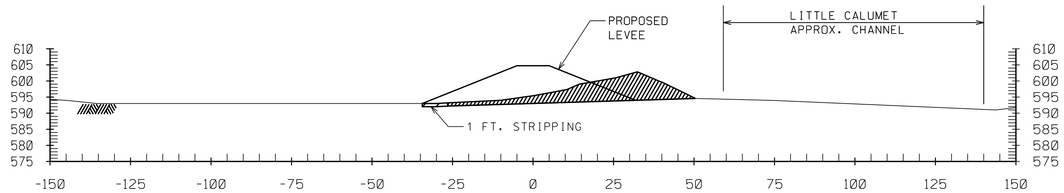

6N 19+00

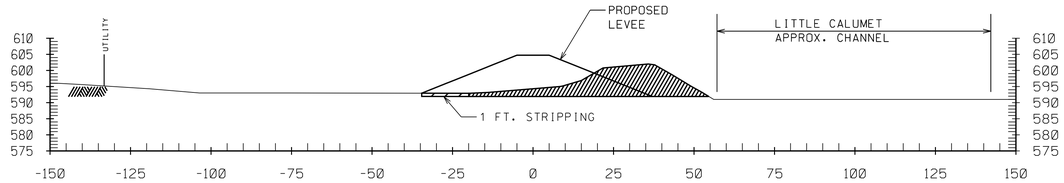

6N 18+00

NOTES:

1. FOR CONTROL POINTS AND WORKLIMITS SEE SHEET C-09 & C-10.
2. FOR PLAN AND PROFILE SEE SHEET C-23.
3. FOR TYPICAL LEVEE AND DITCH SECTIONS SEE C-42
4. HYDROGRAPHIC SURVEY NOT TAKEN AT WATERWAYS. WATER SURFACE IS SHOWN AT TIME OF SURVEY.
5. APPROXIMATE LOCATIONS OF PLANAMETRICS ARE PROVIDED IN EACH SECTION. ALL FEATURES TO BE VERIFIED IN THE FIELD.

ONE FOOT STRIPPING

SPOIL BANK REMOVAL

20' 10' 0 20'

SCALE: 1'' = 20'-0"

US Army Corps of Engineers
Chicago District

SYMBOL	AMENDMENT DESCRIPTION	DATE APPROVED	SYMBOL	DESCRIPTION	DATE APPROVED

DESIGNED BY: JAG
DATE: AUG 2007
DRAWN BY: DB
SCALE: AS SHOWN
CHECKED BY: WK
SOLICITATION NUMBER: W912P6-07-B-0006
SUBMITTED BY: JOHN GROBOSKI
DATE:

U.S. ARMY ENGINEER DISTRICT
CORPS OF ENGINEERS
CHICAGO, ILLINOIS

LITTLE CALUMET RIVER, INDIANA
LOCAL FLOOD PROTECTION
STAGE V, PHASE 2 - LEVEE

CROSS SECTION
STA. 6N 12+00 to 6N 23+00

SHEET REFERENCE NUMBER:
C-39

PLOT DATE: 8/3/2007
FILENAME: D:\working\dms10534\LCS5C39.DGN

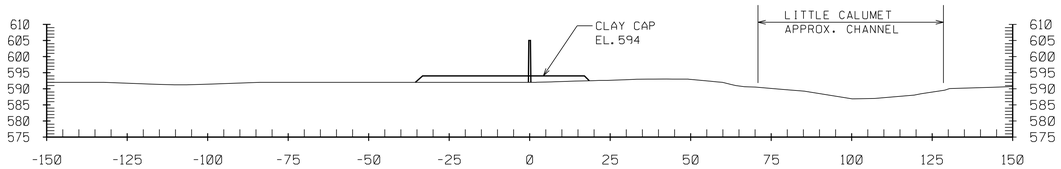

6N 29+00

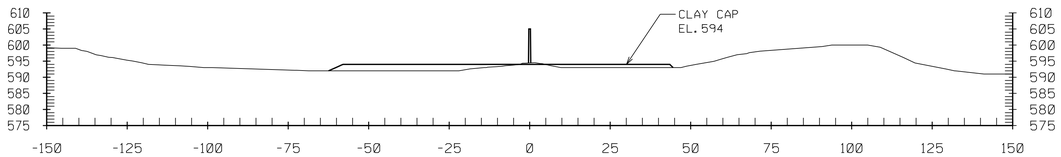

6N 28+00

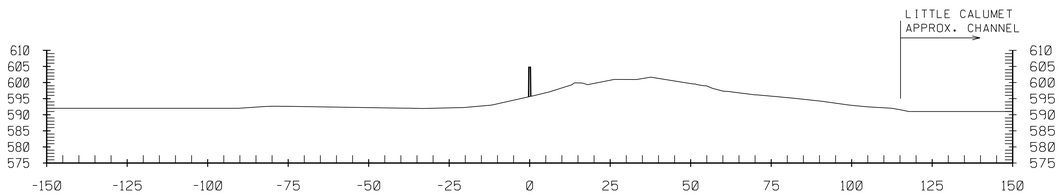

6N 27+00

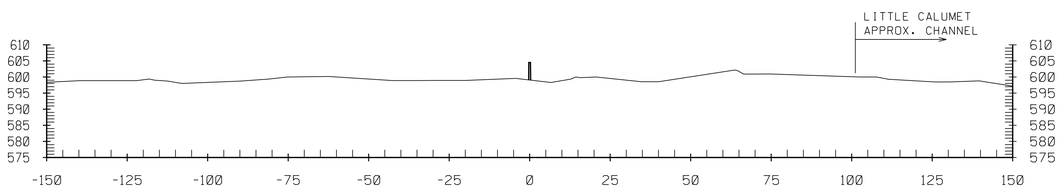

6N 26+00

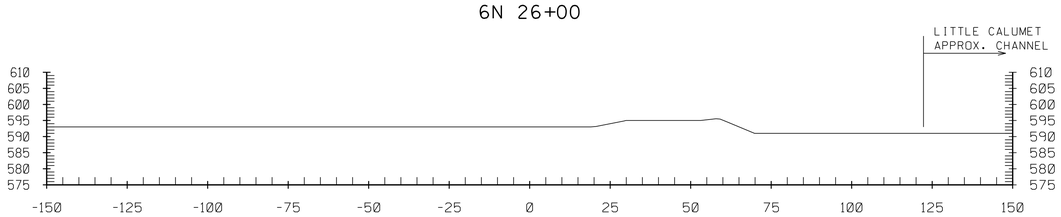

6N 25+00

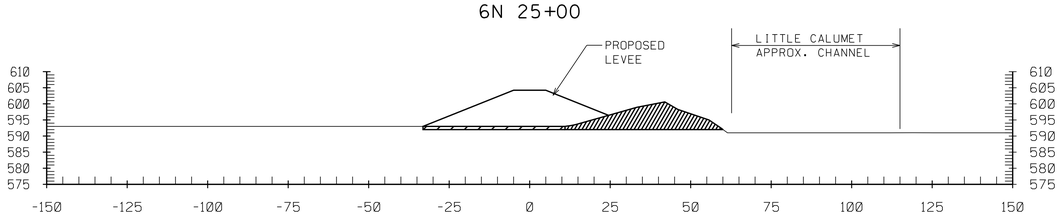

6N 24+00

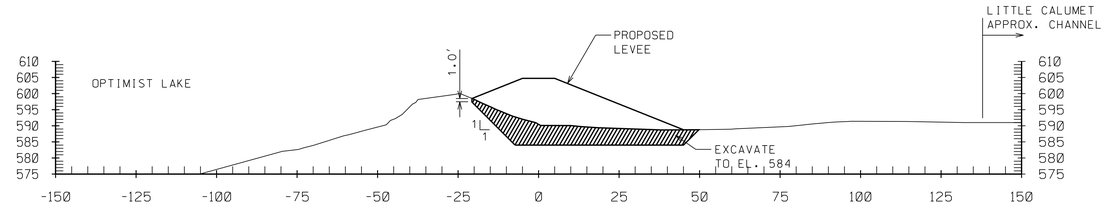

6N 35+00

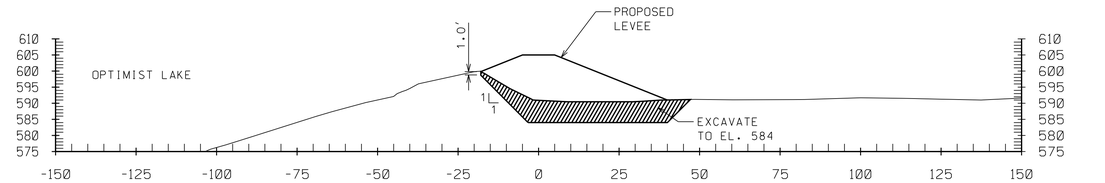

6N 34+00

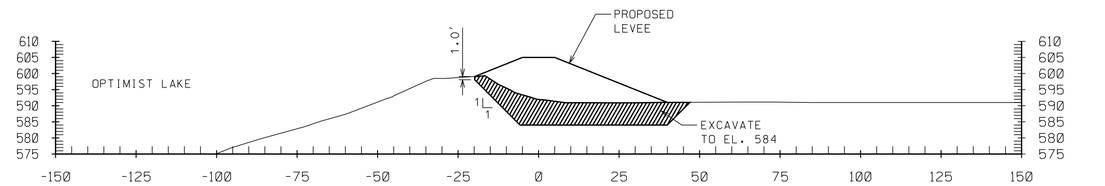

6N 33+00

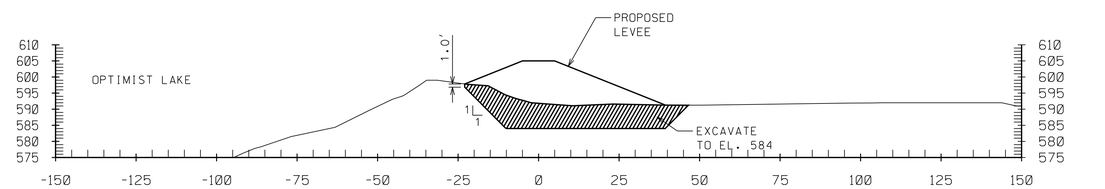

6N 32+00

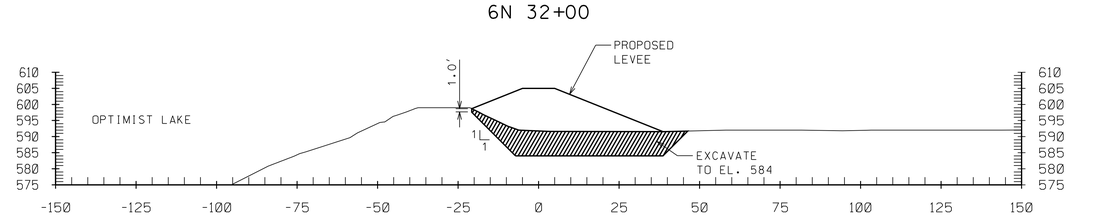

6N 31+00

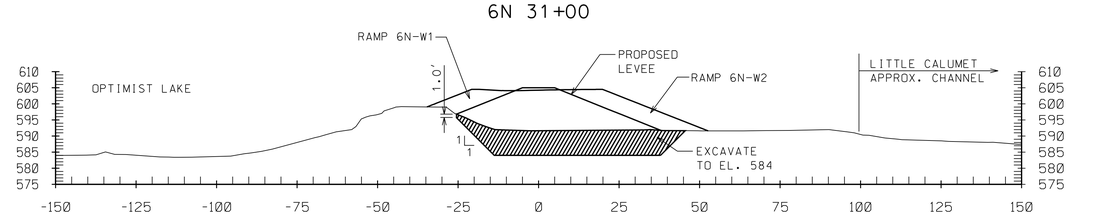

6N 30+00

NOTES:

1. FOR CONTROL POINTS AND WORKLIMITS SEE SHEET C-10.
2. FOR PLAN AND PROFILE SEE SHEET C-24 & C-25.
3. FOR TYPICAL LEVEE AND DITCH SECTIONS SEE C-42
4. HYDROGRAPHIC SURVEY NOT TAKEN AT WATERWAYS. WATER SURFACE IS SHOWN AT TIME OF SURVEY.
5. APPROXIMATE LOCATIONS OF PLANAMETRICS ARE PROVIDED IN EACH SECTION. ALL FEATURES TO BE VERIFIED IN THE FIELD.

ONE FOOT STRIPPING

SPOIL BANK REMOVAL

20' 10' 0 20'

SCALE: 1'' = 20'-0"

US Army Corps of Engineers
Chicago District

SYMBOL	AMENDMENT DESCRIPTION	DATE APPROVED	SYMBOL	DESCRIPTION	DATE APPROVED

DESIGNED BY: JAG
DATE: AUG 2007
DRAWN BY: DB
SCALE: AS SHOWN
CHECKED BY: WK
SOLICITATION NUMBER: W912P6-07-B-0006
SUBMITTED BY: JOHN GROBOSKI
DATE:

U.S. ARMY ENGINEER DISTRICT
CORPS OF ENGINEERS
CHICAGO, ILLINOIS

LITTLE CALUMET RIVER, INDIANA
LOCAL FLOOD PROTECTION
STAGE V, PHASE 2 - LEVEE

CROSS SECTION
STA. 6N 24+00 to 6N 35+00

SHEET REFERENCE NUMBER:
C-40
SHEET 44 OF 138

PLOT DATE: 8/3/2007
FILENAME: D:\working\sms10534\LCS5C40.DGN

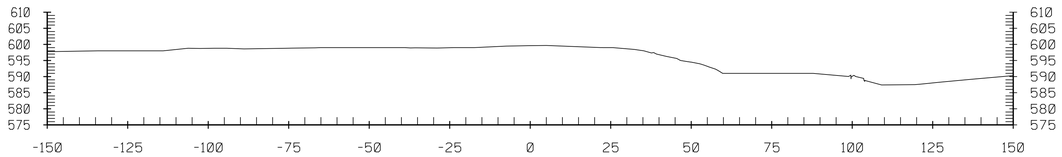

6N 41+00

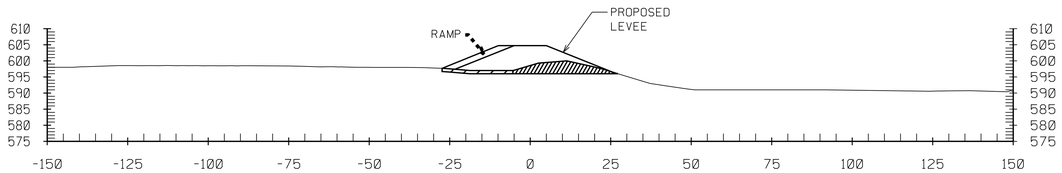

6N 40+00

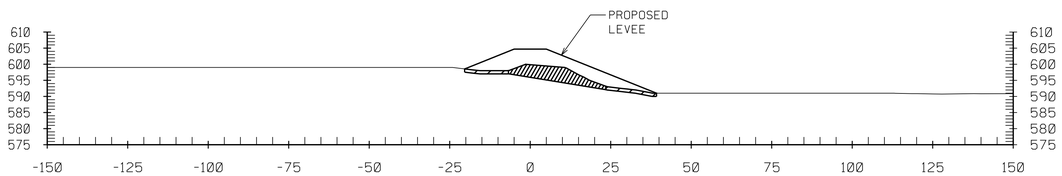

6N 39+00

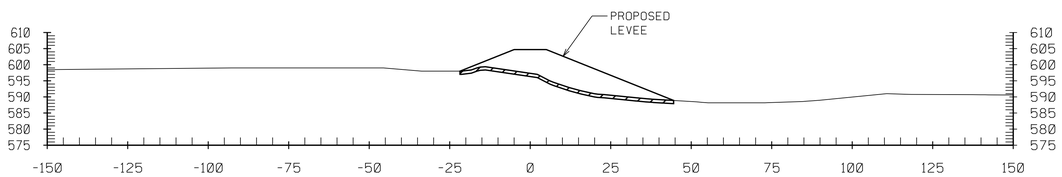

6N 38+00

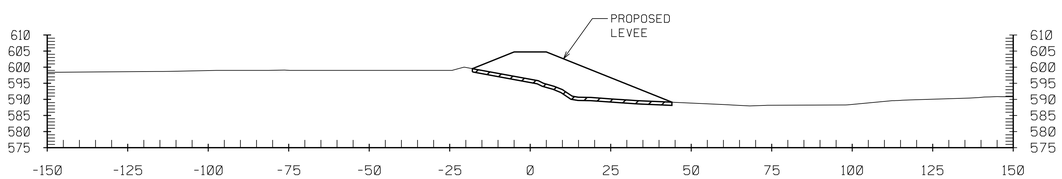

6N 37+00

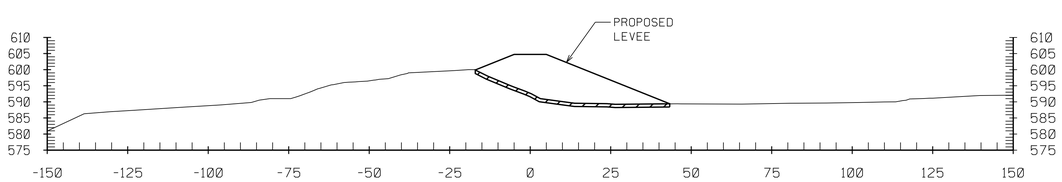

6N 36+00

ONE FOOT STRIPPING

SPOIL BANK REMOVAL

NOTES:

1. FOR CONTROL POINTS AND WORKLIMITS SEE SHEET C-10.
2. FOR PLAN AND PROFILE SEE SHEET C-25.
3. FOR TYPICAL LEVEE AND DITCH SECTIONS SEE C-42
4. HYDROGRAPHIC SURVEY NOT TAKEN AT WATERWAYS. WATER SURFACE IS SHOWN AT TIME OF SURVEY.
5. APPROXIMATE LOCATIONS OF PLANAMETRICS ARE PROVIDED IN EACH SECTION. ALL FEATURES TO BE VERIFIED IN THE FIELD.

20' 10' 0 20'

SCALE: 1'' = 20'-0"

US Army Corps of Engineers
Chicago District

SYMBOL	AMENDMENT DESCRIPTION	DATE APPROVED	SYMBOL	DESCRIPTION	DATE APPROVED

DESIGNED BY: JAG
DATE: AUG 2007
DRAWN BY: DB
SCALE: AS SHOWN
CHECKED BY: WK
SOLICITATION NUMBER: W912P6-07-B-0006
SUBMITTED BY: JOHN GROBOSKI
DATE:

U.S. ARMY ENGINEER DISTRICT
CORPS OF ENGINEERS
CHICAGO, ILLINOIS

LITTLE CALUMET RIVER, INDIANA
LOCAL FLOOD PROTECTION
STAGE V, PHASE 2 - LEVEE

CROSS SECTION
STA. 6N 36+00 to 6N 41+56

SHEET REFERENCE NUMBER:
C-41

SHEET 45 OF 138

PLOT DATE: 8/3/2007
FILENAME: D:\working\sms10534\LCS5C41.DGN

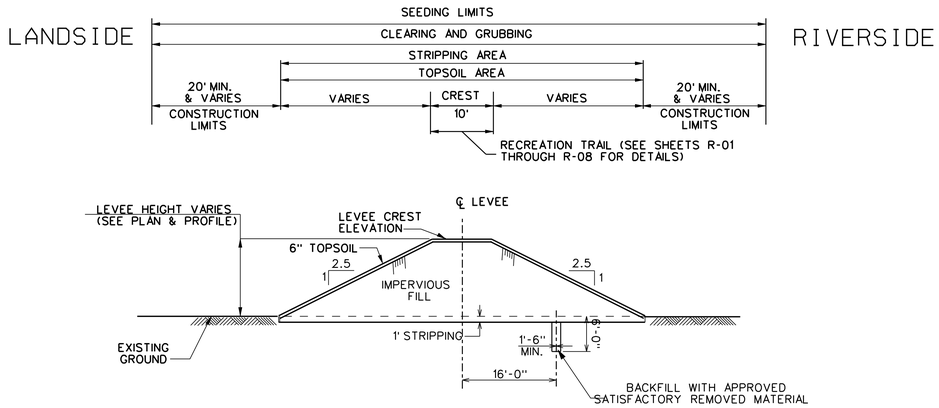

TYPICAL LEVEE SECTION WITH SLIT TRENCH

NOT TO SCALE (SEE NOTE 3)

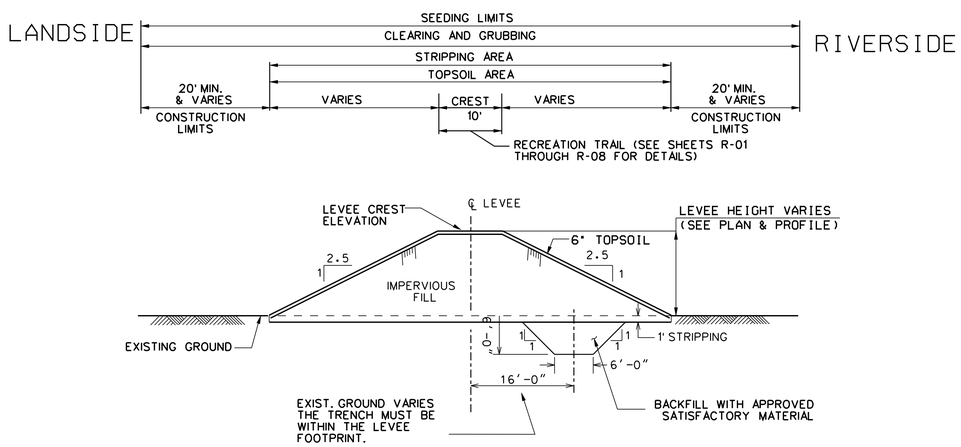

TYPICAL LEVEE SECTION WITH CONVENTIONAL TRENCH

NOT TO SCALE

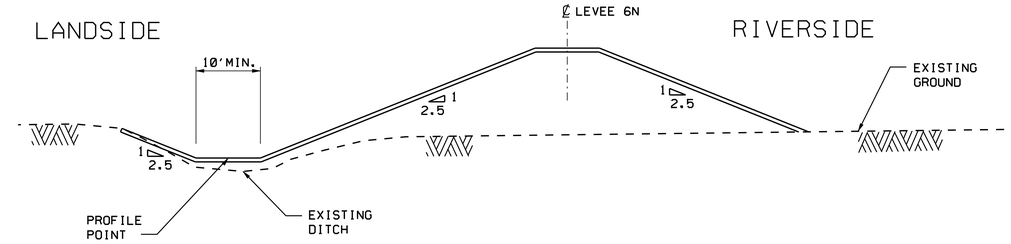

DITCH 6-D1 TYPICAL SECTION
LEVEE 6N STATION 6N 1+40 TO STATION 6N 8+66.5

NOT TO SCALE

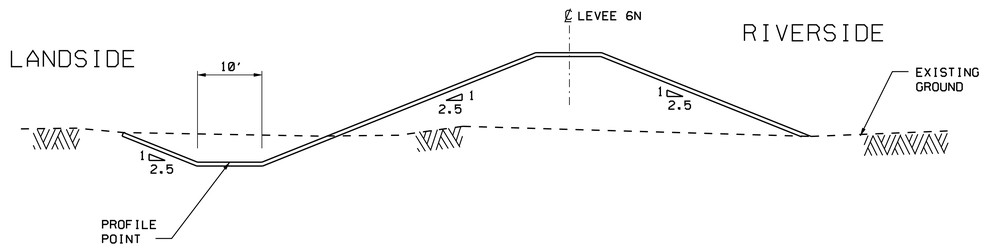

DITCH 6-D2 TYPICAL SECTION
LEVEE 6N STATION 6N 9+25 TO STATION 6N 13+50

NOT TO SCALE

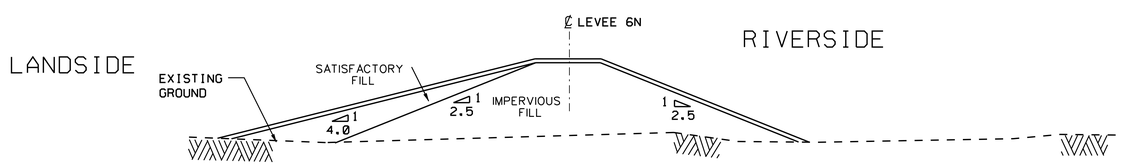

LEVEE 5S STATION 5S 6+40.00 TO 5S 23+00.00

NOT TO SCALE

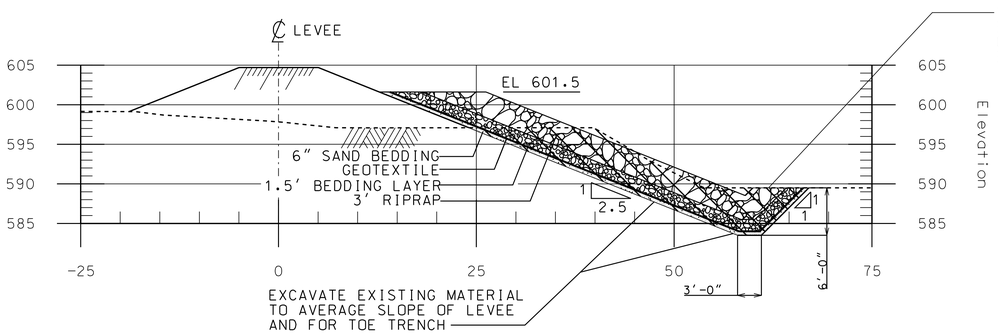

NOTE: APPROXIMATE WATER LEVEL ELEVATION IS 590. A PORTION OF OF THE RIP-RAP WILL BE PLACED BELOW WATER SURFACE.

NOTE: RIPRAP SECTION TYPICAL. SEE SHEET C-20 FOR LIMITS OF RIP-RAP (CLASS 2).

NOTE: GEOTEXTILE TO BE SECURED BEFORE PLACEMENT OF BEDDING LAYER.

HART DITCH RIPRAP DETAIL

NOT TO SCALE

DITCH	WIDTH	LEFT SLOPE	RIGHT SLOPE
5S-D1	3'	2.5	2.5
5S-D2	3'	2.5	2.5
6N-D1	10'	2.5	2.5
6N-D2	10'	2.5	2.5
6N-D3	3'		

NOTES:

1. PAYMENT FOR TOPSOIL SHALL BE LIMITED TO THE STRIPPING AREAS. PAYMENT FOR SEEDING SHALL BE LIMITED TO AREAS OF CLEARING AND GRUBBING. DISTURBED AREAS OUTSIDE OF THESE LIMITS SHALL BE TOPSOILED & SEEDED AT CONTRACTOR'S EXPENSE.

2. CONVENTIONAL INSPECTION TRENCH SIDE SLOPES SHALL BE 1H:1V OR FLATTER AS DICTATED BY FIELD CONDITIONS FOR STABILITY.

3. CONTRACTOR SHALL USE SLIT TRENCH UNLESS FIELD CONDITIONS FOR STABLILITY REQUIRE USE OF A COMBINED OR CONVENTIONAL TRENCH.

4. FOR FLOOD WALLS THE CLEARING AND GRUBBING AREA SHALL BE TAKEN TO THE WORKLIMITS, UNLESS OTHERWISE NOTED.

5. FOR TRAIL\ROAD SECTION SEE SHEET R-SHEETS.

6. ALL LOCATIONS THAT CONTAIN LEVEE, WILL REQUIRE AN INSPECTION TRENCH.

US Army Corps of Engineers
Chicago District

SYMBOL	AMENDMENT DESCRIPTION	DATE APPROVED	SYMBOL	DESCRIPTION	DATE APPROVED

DESIGNED BY: JAG
DATE: AUG 2007
DRAWN BY: DB
SCALE: AS SHOWN
CHECKED BY: WK
SOLICITATION NUMBER: W912P6-07-B-0006
SUBMITTED BY: JOHN GROBOSKI
DATE:

U.S. ARMY ENGINEER DISTRICT
CORPS OF ENGINEERS
CHICAGO, ILLINOIS

LITTLE CALUMET RIVER, INDIANA
LOCAL FLOOD PROTECTION
STAGE V, PHASE 2 - LEVEE

LEVEE, TRENCH, AND DITCH TYPICAL SECTIONS

SHEET REFERENCE NUMBER:
C-42

PLOT DATE: 8/3/2007
FILENAME: D:\working\dms10534\LCS5C42.DGN

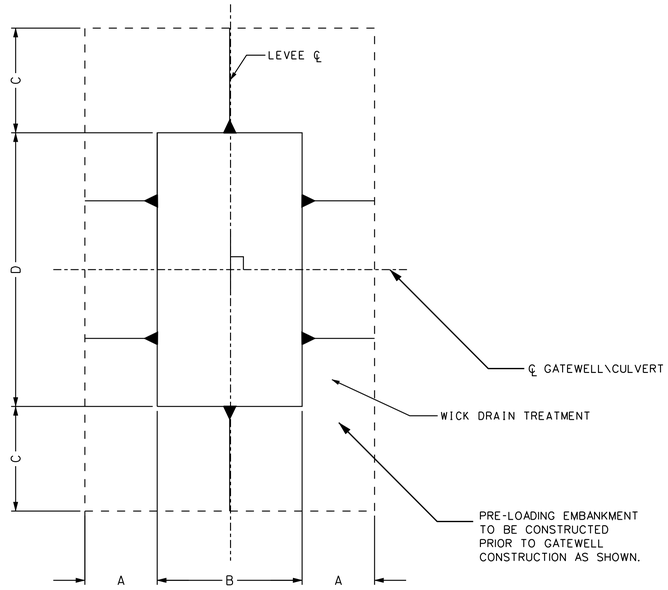

1 / C-43 PRE-LOADING EMBANKMENT

20 10 0 20 40
SCALE IN FEET

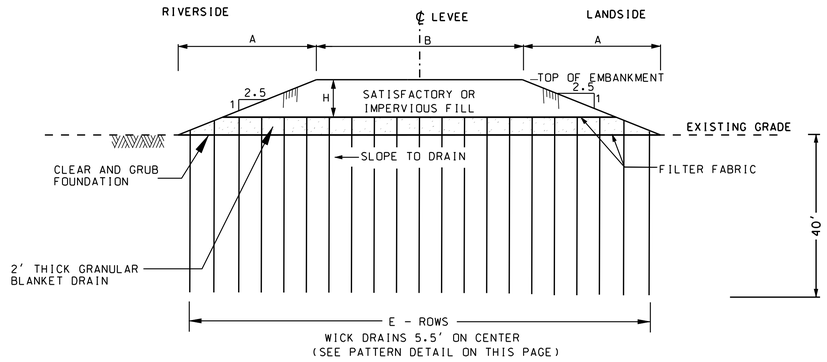

2 / C-43 PRE-LOADING EMBANKMENT
SECTION A-A - PARALLEL TO PIPE ALIGNMENT
N.T.S.

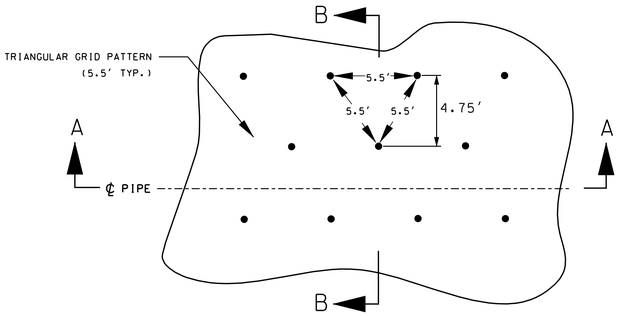

4 / C-43 WICK DRAIN INSTALLATION PATTERN DETAIL
N.T.S. (PARALLEL TO PIPE)

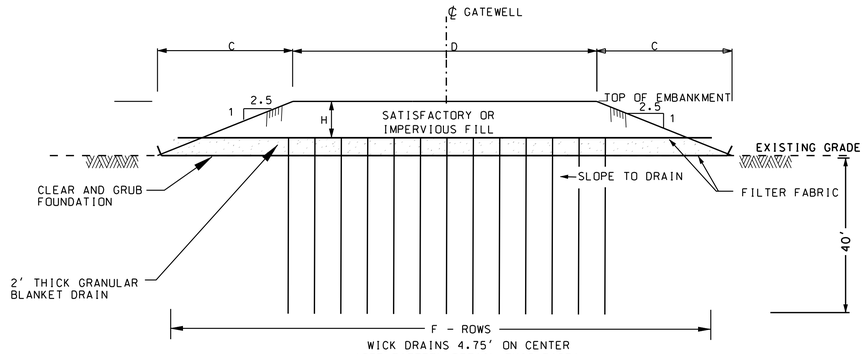

3 / C-43 PRE-LOADING EMBANKMENT
SECTION B-B - NORMAL TO PIPE ALIGNMENT
N.T.S.

NOTES

1. FOR STANDARD SYMBOLS AND ABBREVIATIONS SEE SHEET G-03.
2. THE PRELOAD EMBANKMENT DETAIL SHOWN FOR CULVERT 6-5C IS TYPICAL OF PRELOAD EMBANKMENT AREAS IN THIS PROJECT. SEE PRE-LOAD EMBANKMENT TABLE AND DETAILS 3 AND 4.

PRE-LOADING EMBANKMENT									
STATION	LOCATION	A FT	B FT	C FT	D FT	HEIGHT (H) FT	E #	F #	# OF WICKS
5S 73+00	TRI-STATE	26.3	10.0	26.3	40.0	10.5	12	9	108
6N 12+60	6-3C	26.3	10.0	26.3	40.0	10.5	12	9	108
6N 22+00	6-5C	28.8	10.0	28.8	40.0	11.5	13	9	117
6N 34+40	6-7C	38.8	10.0	38.8	40.0	15.5	16	9	144

CONSTRUCTION NOTES:

1. CLEAR AND GRUB BENEATH PRE-LOADING EMBANKMENT. GRADE FOUNDATION USING IMPERVIOUS MATERIAL IN COMPACTED LAYERS AND SLOPE TO DRAIN.
2. LOWER FILTER FABRIC AND GRANULAR BLANKET TO BE PLACED PRIOR TO INSTALLING WICK DRAINS. UPPER FILTER FABRIC TO BE PLACED BEFORE OR AFTER WICK DRAINS ARE INSTALLED.
3. FOUNDATION SETTLEMENT TO BE MONITORED WITH SETTLEMENT GAGES. PRE-LOADING TIME IS ESTIMATED TO BE 180 DAYS. HOWEVER, PRE-LOADING TIME TO BE A MINIMUM OF 60 DAYS, REGARDLESS OF SETTLEMENT MEASUREMENTS. PRE-LOADING TIME TO START AFTER PRE-LOADING EMBANKMENT IS CONSTRUCTED TO LINES AND GRADES SHOWN. THE CONTRACTING OFFICER WILL ADVISE WHEN SETTLEMENT IS CONSIDERED COMPLETE.
4. ONE SETTLEMENT GAGE SHALL BE PLACED APPROXIMATELY IN THE CENTER OF EACH PRE-LOADING AREA. SETTLEMENT GAGE TO BE USED ONLY TO MONITOR SETTLEMENT OF PRE-LOADING EMBANKMENT FOUNDATION; GAGE TO BE REMOVED DURING GATEWELL OR CULVERT CONSTRUCTION. BASE OF GAGE TO BE ON TOP OF GRANULAR BLANKET.
5. PRIOR TO CONSTRUCTING GATEWELL, MANHOLE, AND ADJACENT LEVEE, GRANULAR BLANKET DRAIN AND GEOTEXTILE SHALL BE REMOVED IN ITS ENTIRETY. EXCAVATION BACKFILL TO CONSIST OF COMPACTED IMPERVIOUS FILL.
6. THE PRELOAD AREA MAY BE SET AT A SKEWED ANGLE, DEPENDING UPON THE LOCATION OF THE GATEWELL. UNLESS OTHERWISE NOTED THE PRELOAD AREA WILL BE PERPENDICULAR TO THE LEVEE ALIGNMENT AS SHOWN IN DETAIL 1 ON THIS SHEET.

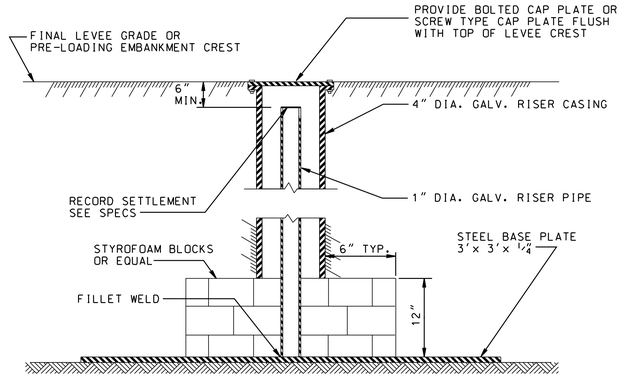

5 / C-43 TYPICAL SETTLEMENT GAGE
N.T.S.

NOTE:
GAGES TO BE LOCATED AT CENTER OF THE LEVEE CREST AS REQUIRED.
PLATE AND PIPES SHALL BE PROTECTED.

US Army Corps of Engineers
Chicago District

SYMBOL	AMENDMENT DESCRIPTION	DATE APPROVED	SYMBOL	DESCRIPTION	DATE APPROVED

DESIGNED BY: JAG
DATE: AUG 2007
DRAWN BY: DB
SCALE: AS SHOWN
CHECKED BY: WK
SOLICITATION NUMBER: W912P6-07-B-0006
SUBMITTED BY: JOHN GROBOSKI
DATE:

U.S. ARMY ENGINEER DISTRICT
CORPS OF ENGINEERS
CHICAGO, ILLINOIS

LITTLE CALUMET RIVER, INDIANA
LOCAL FLOOD PROTECTION
STAGE V, PHASE 2 - LEVEE

PRELOAD EMBANKMENTS AND DRAINAGE WICKS

SHEET REFERENCE NUMBER:
C-43
SHEET 47 OF 138

PLOT DATE: 8/3/2007
FILENAME: D:\working\dms10534\C55C43.DGN

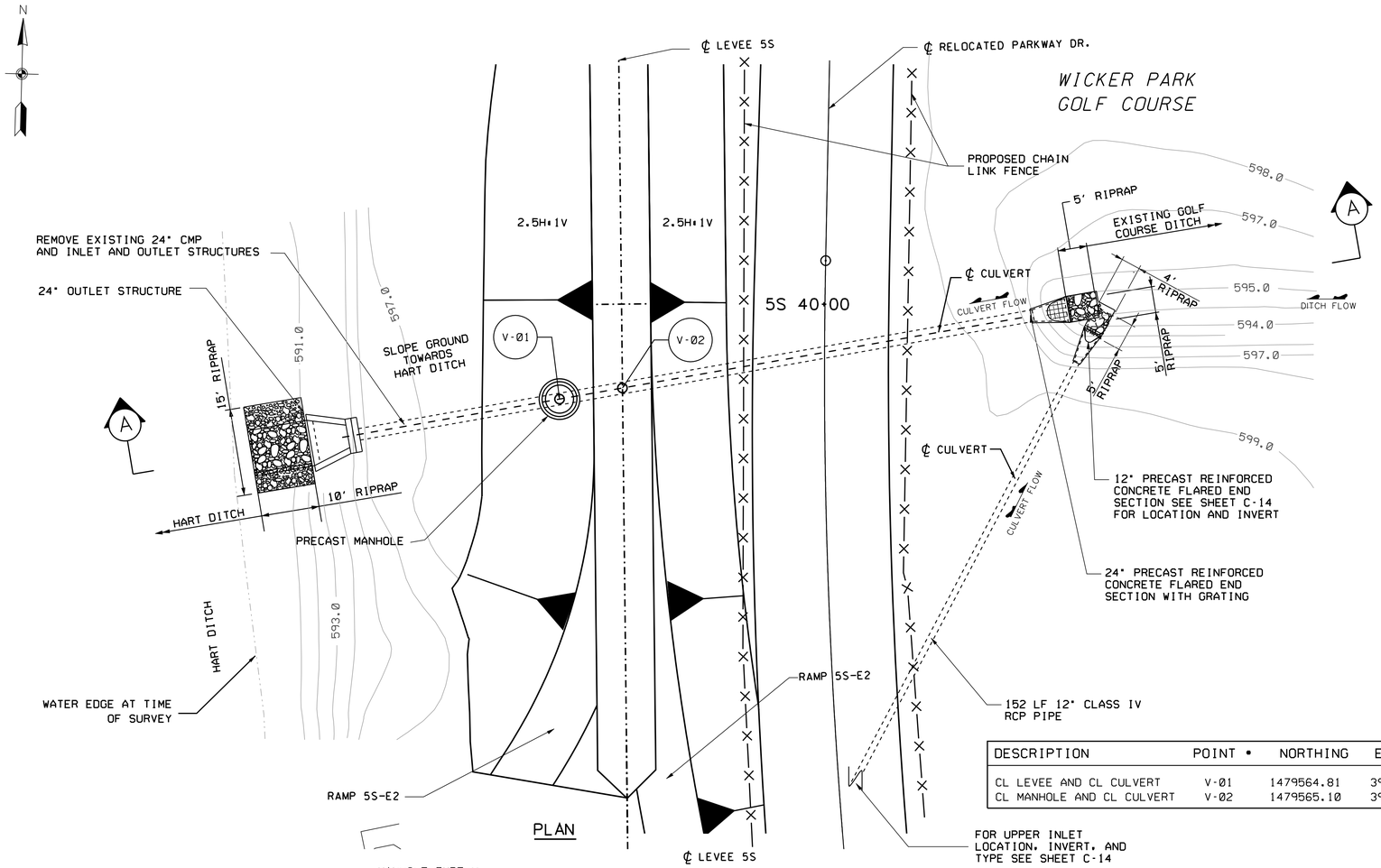

PLAN

DESCRIPTION	POINT #	NORTHING	EASTING
CL LEVEE AND CL CULVERT	V-01	1479564.81	391244.11
CL MANHOLE AND CL CULVERT	V-02	1479565.10	391233.11

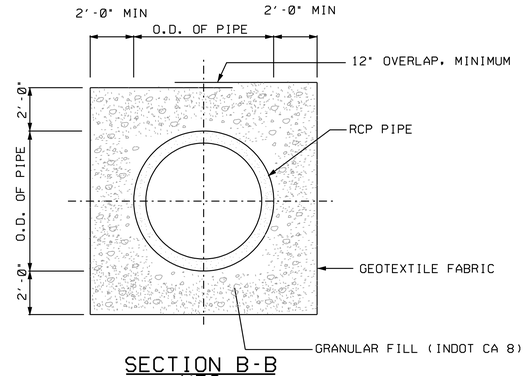

SECTION B-B
NTS

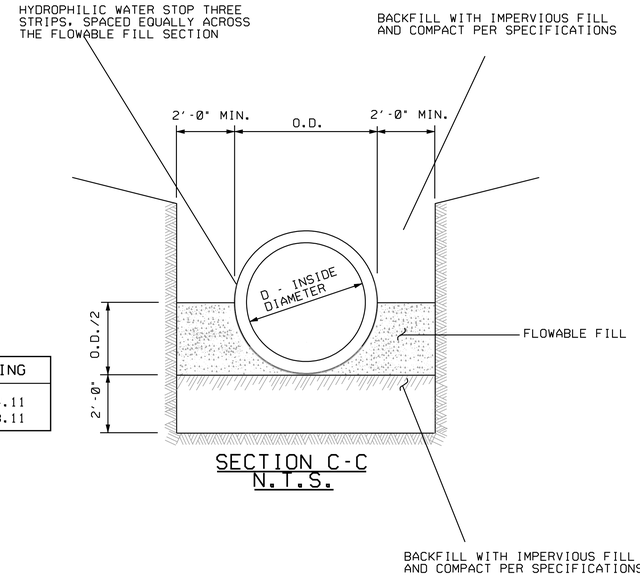

SECTION C-C
N.T.S.

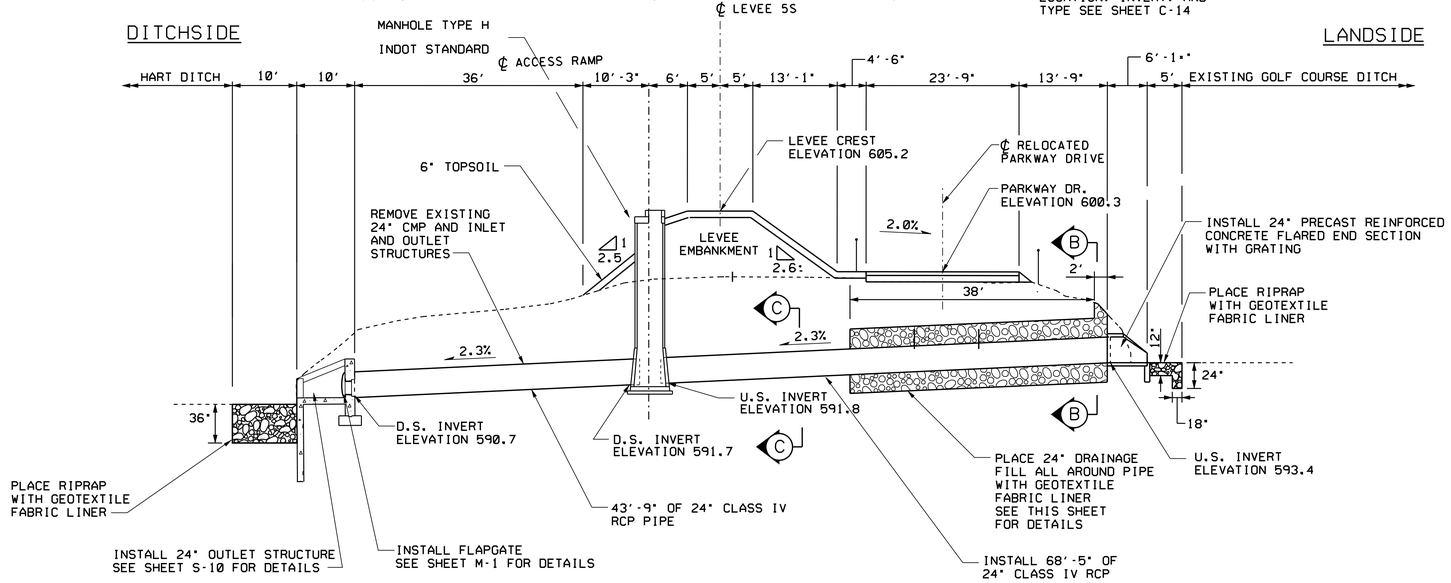

CROSS SECTION A-A - LEVEE 5S
CULVERT 5-8C @ STA. 39+85.56

VERTICAL 5 0 5 10FT
SCALE: 1"= 5'

HORIZONTAL 10 5 0 10 20FT
SCALE: 1"= 10'

NOTES:

1. LEVEE, RECREATION TRAIL, AND RELOCATED PARKWAY DR. CONTROL POINTS ARE LISTED ON WORK LIMITS SHEET C-03.
2. FOR SYMBOLS, ABBREVIATIONS, AND GENERAL NOTES SEE SHEETS G-03 AND G-04.
3. FOR LEVEE TYPICAL SECTIONS SEE SHEET C-42.
4. SEE INDIANA DEPARTMENT OF TRANSPORTATION ROAD STANDARDS FOR GATE AND FENCE DETAILS EXCEPT FOR FENCE HEIGHT.
5. FOR RELOCATED PARKWAY DR. PLAN AND PROFILE SEE SHEET C-14.
6. RIPRAP SHALL BE INDOT "REVETMENT" GRADATION RIP RAP ON LANDSIDE AND CLASS I ON DITCHSIDE.
7. PIPE BEDDING AND BACKFILL SHALL BE IMPERVIOUS MATERIAL.
8. FOR ACCESS RAMP DETAILS AND TYPICAL SECTIONS SEE SHEETS R-04, R-08, R-09, AND R-10.
9. FOR TRENCH SECTION DETAILS, SEE SHEET C-42.

US Army Corps of Engineers
Chicago District

SYMBOL	AMENDMENT DESCRIPTION	DATE APPROVED	SYMBOL	DESCRIPTION	DATE APPROVED

DESIGNED BY: JAG
DATE: AUG 2007
DRAWN BY: DB
SCALE: AS SHOWN
CHECKED BY: WK
SOLICITATION NUMBER: W912P6-07-B-0006
SUBMITTED BY: JOHN GROBOSKI
DATE:

U.S. ARMY ENGINEER DISTRICT
CORPS OF ENGINEERS
CHICAGO, ILLINOIS

LITTLE CALUMET RIVER, INDIANA
LOCAL FLOOD PROTECTION
STAGE V, PHASE 2 - LEVEE

CULVERT 5-8C DETAIL -
24" RCP - 5S

SHEET REFERENCE NUMBER:
C-44
SHEET 48 OF 138

PLOT DATE: 8/3/2007
FILENAME: D:\working\dms10534\C55C44.DGN

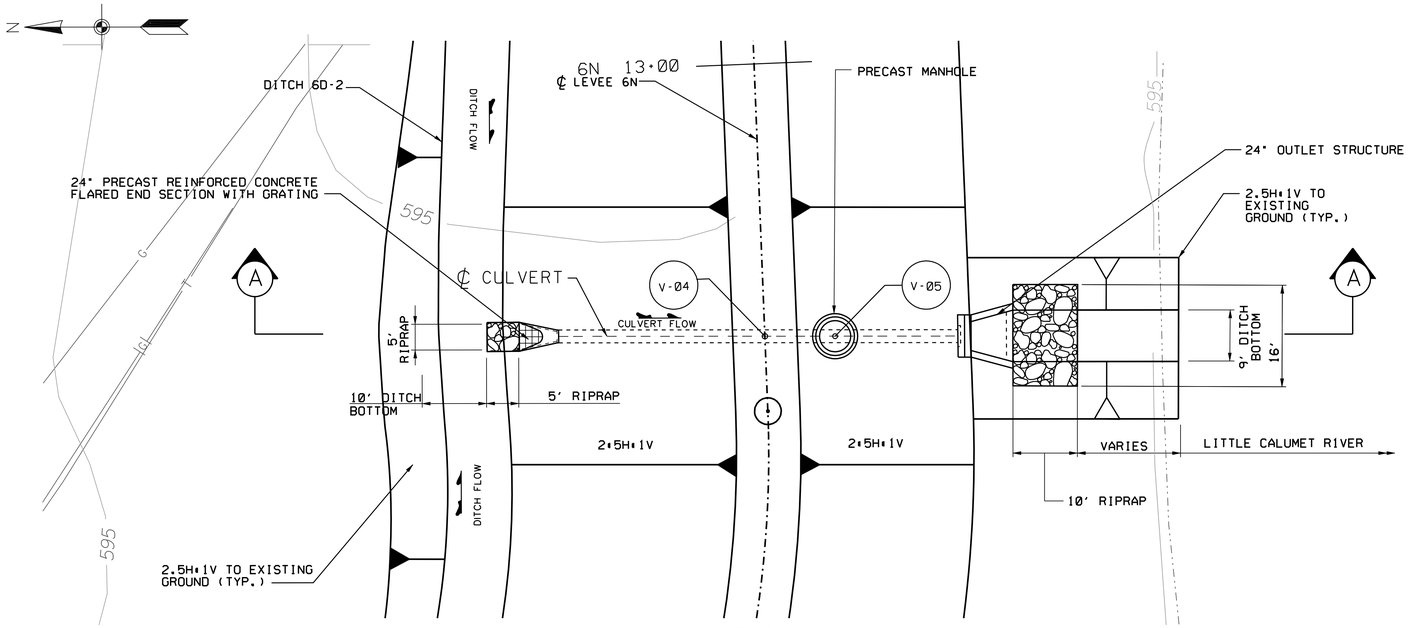

PLAN

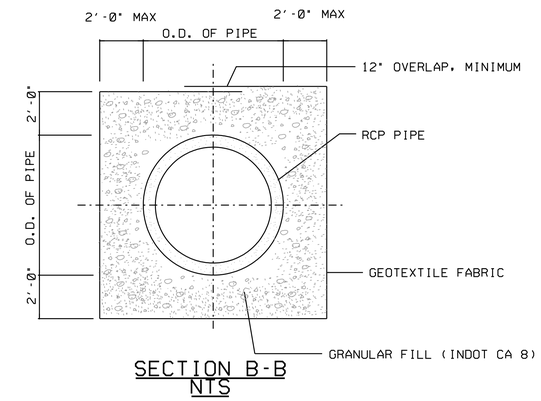

SECTION B-B
NTS

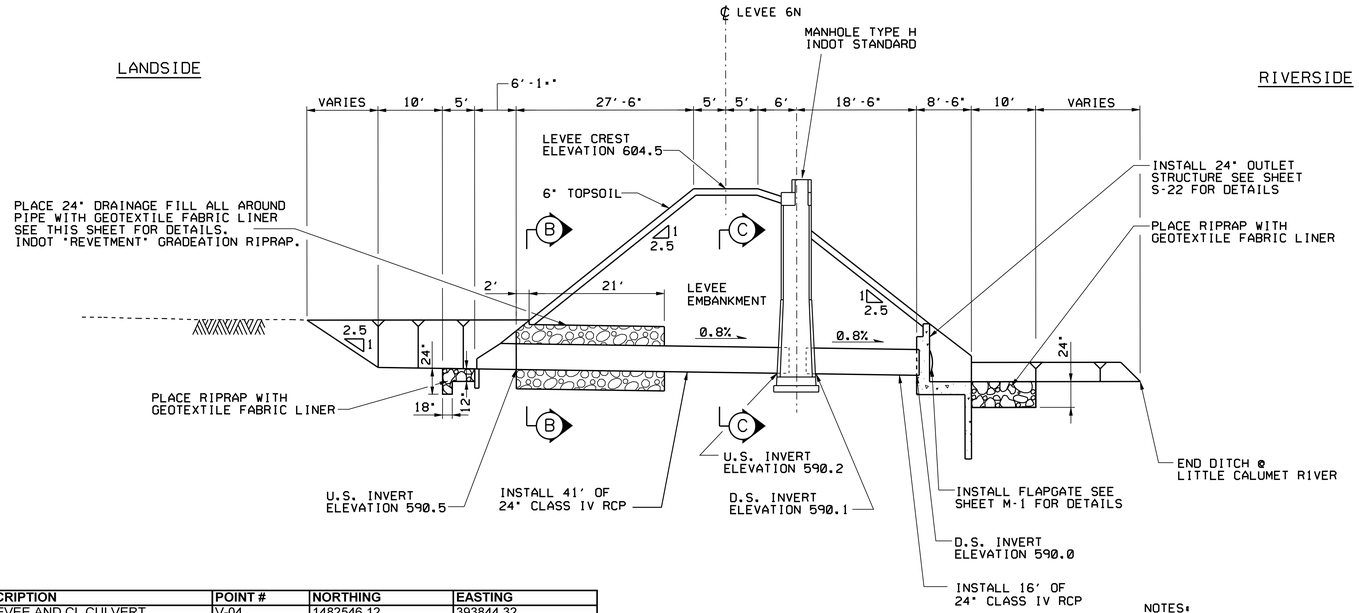

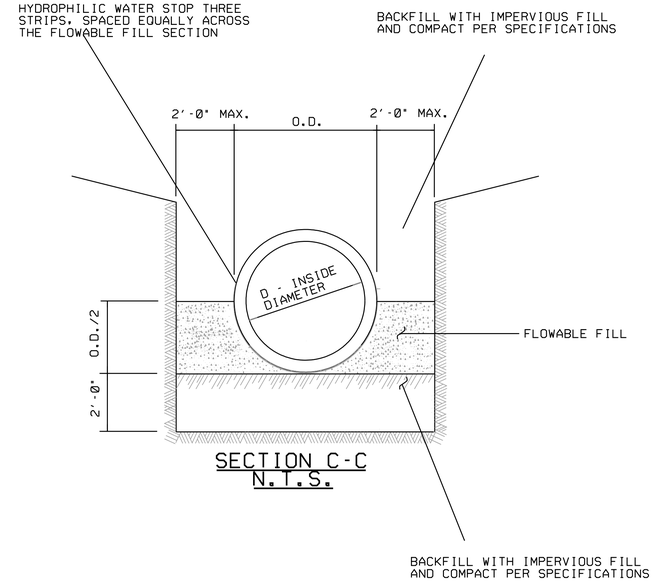

SECTION C-C
N.T.S.

DESCRIPTION	POINT #	NORTHING	EASTING
CL LEVEE AND CL CULVERT	V-04	1482546.12	393844.32
CL MANHOLE AND CL CULVERT	V-05	1482535.85	393847.98

CROSS SECTION A-A - LEVEE 6N
CULVERT 6-3C @ STA. 12+61

VERTICAL — 5 0 5 10FT — SCALE: 1"= 5'

HORIZONTAL — 10 5 0 10 20FT — SCALE: 1"= 10'

NOTES:

1. LEVEE AND DITCH CONTROL POINTS ARE LISTED ON WORK LIMITS SHEET C-09.
2. FOR SYMBOLS, ABBREVIATIONS, & GENERAL NOTES SEE SHEETS G-03 AND G-04.
3. FOR LEVEE AND DITCH TYPICAL SECTIONS SEE SHEET C-42.
4. RIPRAP SHALL BE INDOT "REVETMENT" GRADEATION RIPRAP.
5. PIPE BEDDING AND BACKFILL SHALL BE IMPERVIOUS MATERIAL EXCEPT FOR DRAINAGE FILL AREA.
6. FOR LEVEE 6N PLAN AND PROFILE DETAILS SEE SHEET C-22.
7. FOR TRENCH SECTION DETAILS, SEE SHEET C-42.

US Army Corps of Engineers
Chicago District

SYMBOL	AMENDMENT DESCRIPTION	DATE APPROVED	SYMBOL	DESCRIPTION	DATE APPROVED

DESIGNED BY: JAG
DATE: AUG 2007
DRAWN BY: DB
SCALE: AS SHOWN
CHECKED BY: WK
SOLICITATION NUMBER: W912P6-07-B-0006
SUBMITTED BY: JOHN GROBOSKI
DATE:

U.S. ARMY ENGINEER DISTRICT
CORPS OF ENGINEERS
CHICAGO, ILLINOIS

LITTLE CALUMET RIVER, INDIANA
LOCAL FLOOD PROTECTION
STAGE V, PHASE 2 - LEVEE

CULVERT 6-3C DETAIL -
24" RCP - 6N

SHEET REFERENCE NUMBER:
C-45

PLOT DATE: 8/3/2007
FILENAME: D:\working\sms10534\LCS5C45.DGN

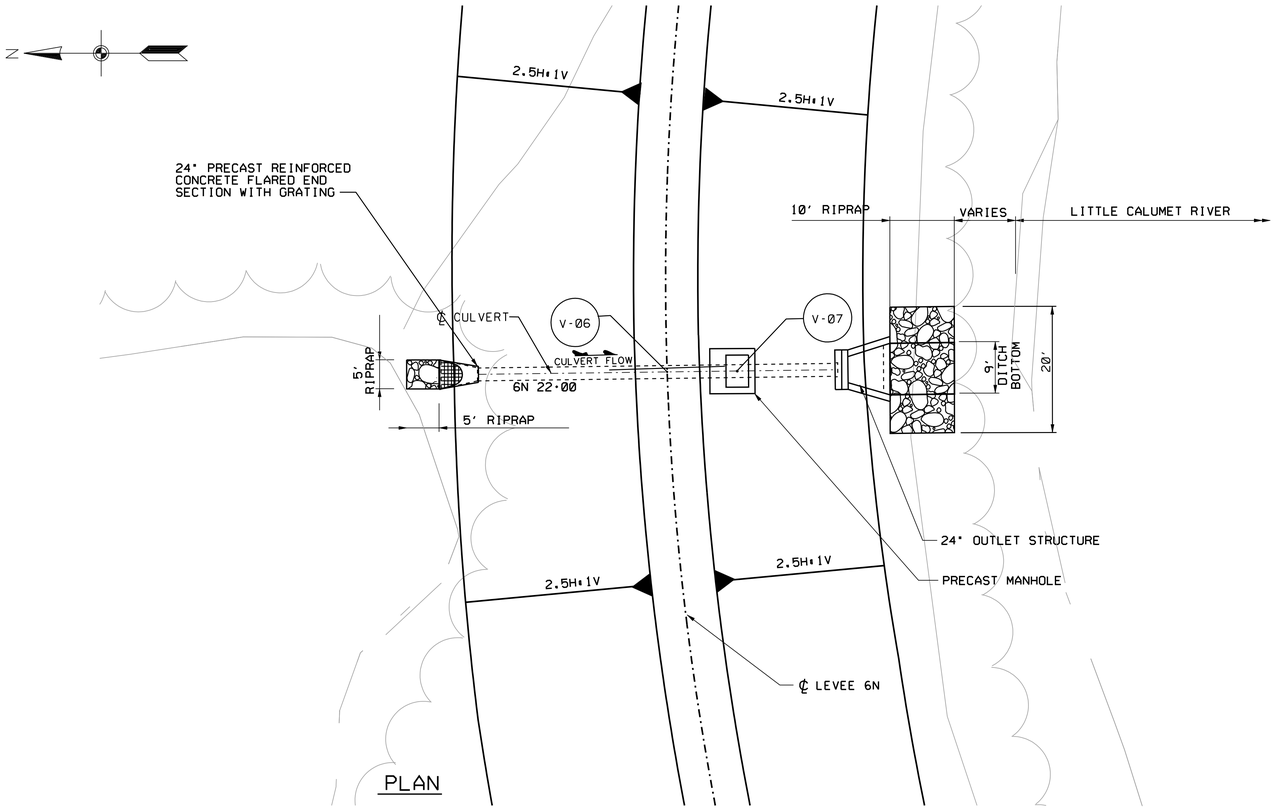

PLAN

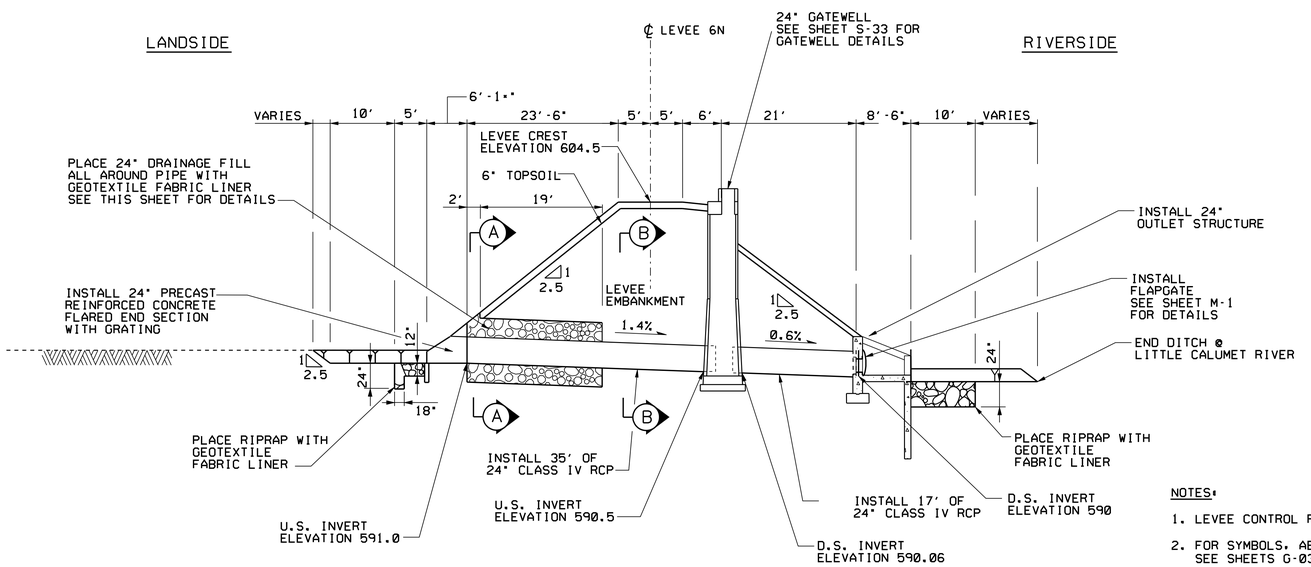

CROSS SECTION - LEVEE 6N
CULVERT 6-5C @ STA. 22+00

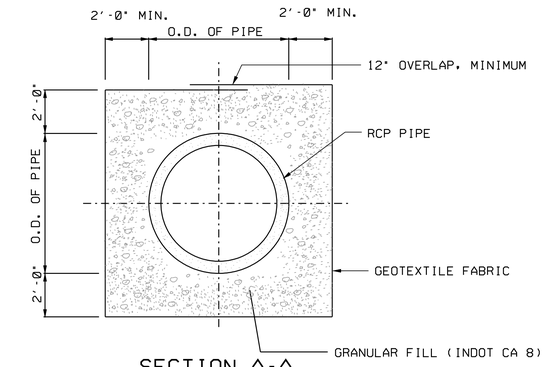

SECTION A-A
N.T.S.

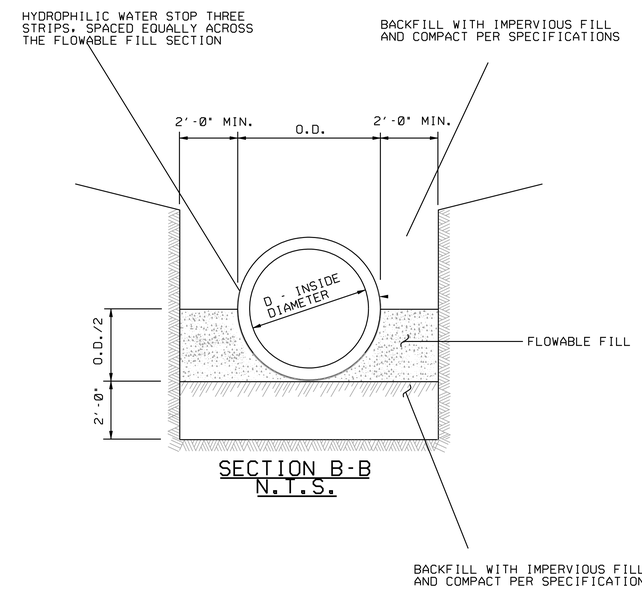

SECTION B-B
N.T.S.

DESCRIPTION	POINT #	NORTHING	EASTING
CL LEVEE AND CL CULVERT	V-06	1482846.33	394729.51
CL MANHOLE AND CL CULVERT	V-07	1482835.54	394728.12

NOTES:

1. LEVEE CONTROL POINTS ARE LISTED ON WORK LIMITS SHEET C-10.
2. FOR SYMBOLS, ABBREVIATIONS, & GENERAL NOTES SEE SHEETS G-03 AND G-04.
3. FOR LEVEE TYPICAL SECTIONS SEE SHEET C-42.
4. RIPRAP SHALL BE INDOT "REVETMENT" GRADEATION RIPRAP.
5. PIPE BEDDING AND BACKFILL SHALL BE IMPERVIOUS MATERIAL EXCEPT FOR DRAINAGE FILL AREA.
6. FOR LEVEE 6N PLAN AND PROFILE DETAILS SEE SHEET C-23.
7. FOR TRENCH SECTION DETAILS, SEE SHEET C-42.
8. SEE S-33 FOR GATEWELL.
9. SEE SHEET C-43 FOR PRE-LOAD REQUIREMENTS.

US Army Corps of Engineers
Chicago District

SYMBOL	AMENDMENT DESCRIPTION	DATE APPROVED	SYMBOL	DESCRIPTION	DATE APPROVED

DESIGNED BY: JAG
DATE: AUG 2007
DRAWN BY: DB
SCALE: AS SHOWN
CHECKED BY: WK
SOLICITATION NUMBER: W912P6-07-B-0006
SUBMITTED BY: JOHN GROBOSKI
DATE:

U.S. ARMY ENGINEER DISTRICT
CORPS OF ENGINEERS
CHICAGO, ILLINOIS

LITTLE CALUMET RIVER, INDIANA
LOCAL FLOOD PROTECTION
STAGE V, PHASE 2 - LEVEE

CULVERT 6-5C DETAIL -
24" RCP - 6N

SHEET REFERENCE NUMBER:
C-46
SHEET 50 OF 138

PLOT DATE: 8/3/2007
FILENAME: D:\working\dms10534\CS5C46.DGN

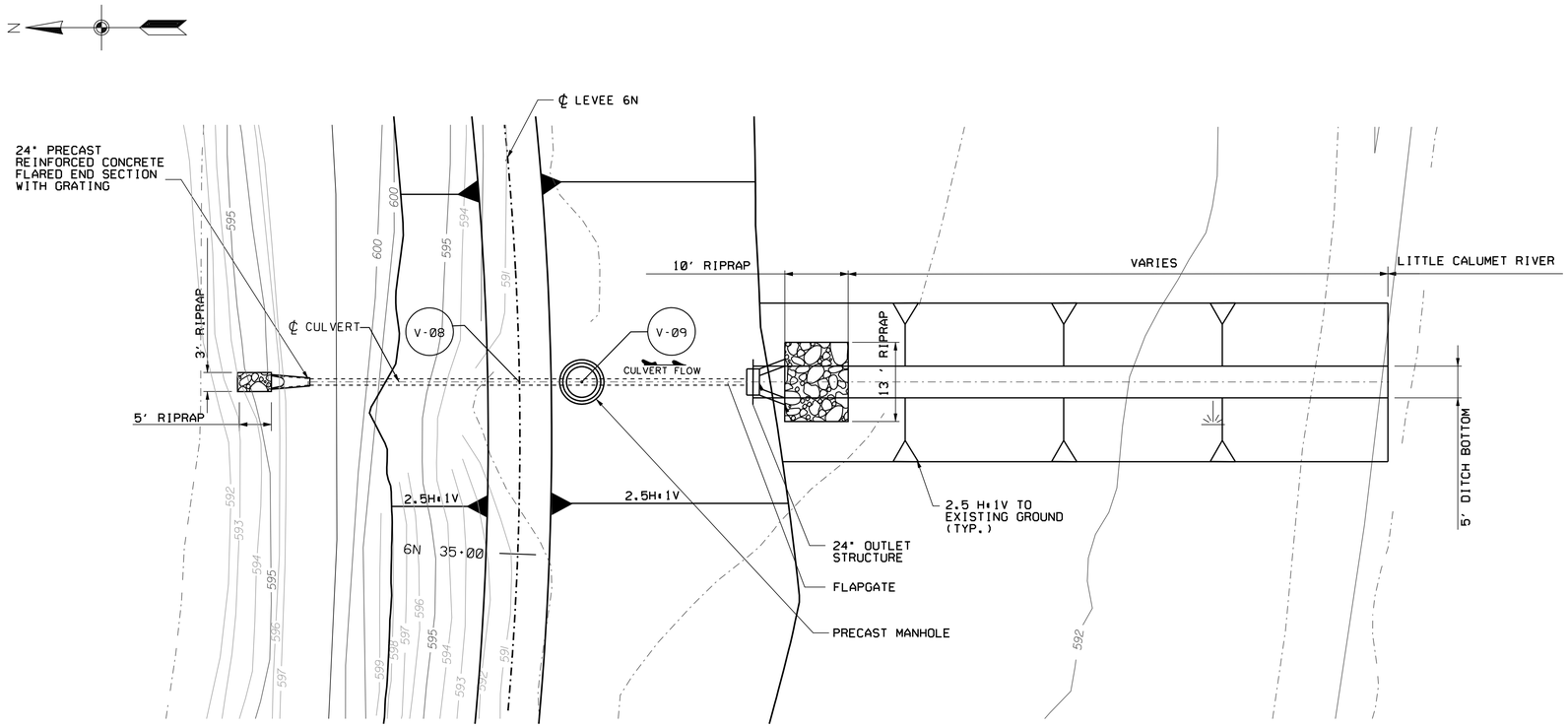

PLAN

DESCRIPTION	POINT #	NORTHING	EASTING
CL LEVEE AND CL CULVERT	V-08	1482522.61	395880.23
CL MANHOLE AND CL CULVERT	V-09	1482512.78	395880.23

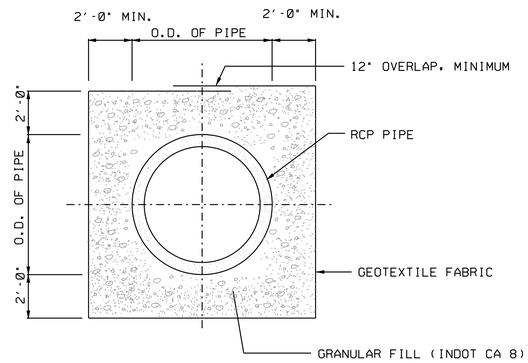

SECTION A-A
N.T.S.

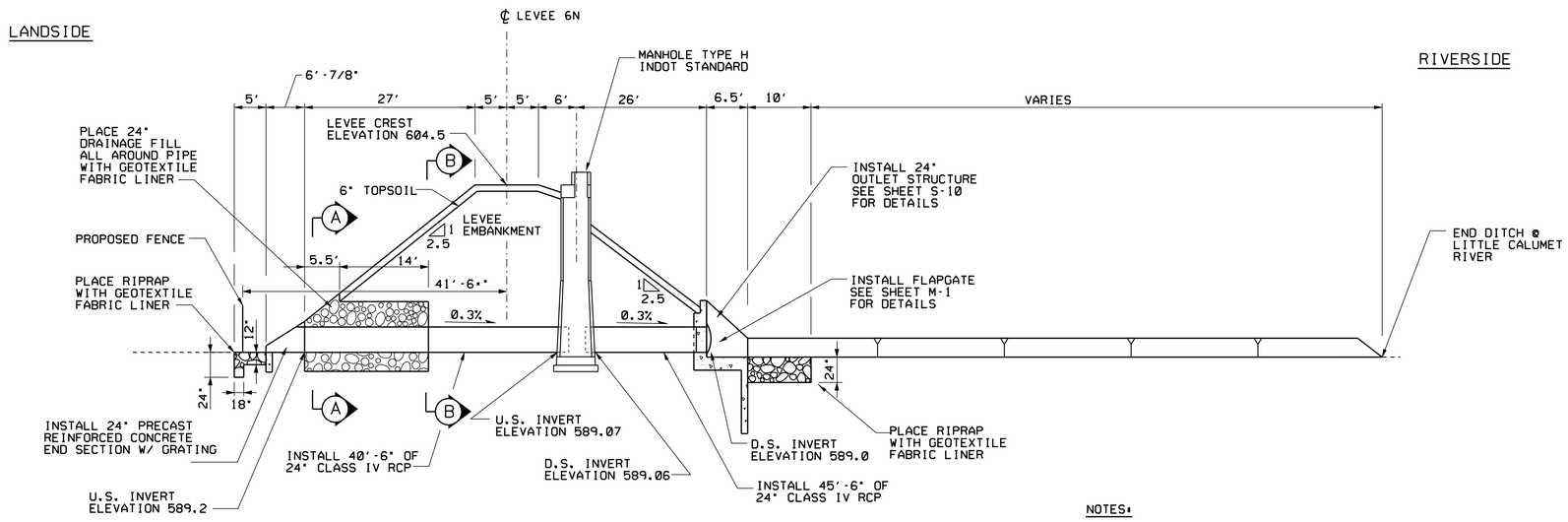

CROSS SECTION - LEVEE 6N
CULVERT 6-7C @ STA. 35+38

VERTICAL 5 0 5 10FT
SCALE: 1"= 5'

HORIZONTAL 10 5 0 10 20FT
SCALE: 1"= 10'

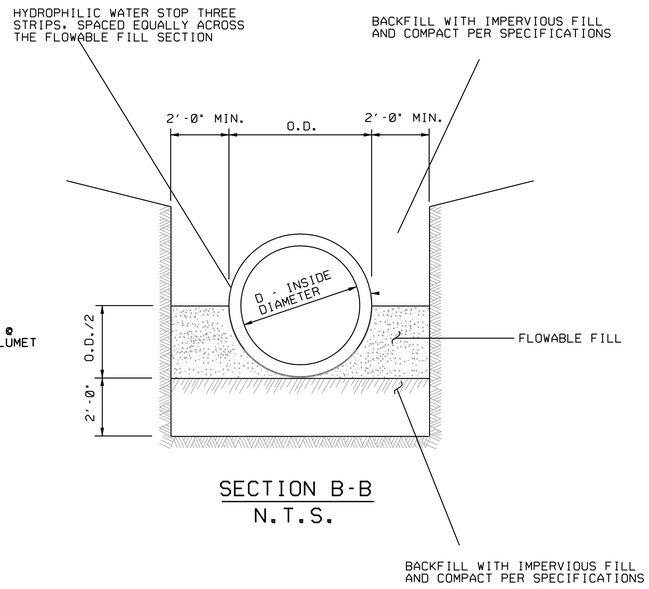

SECTION B-B
N.T.S.

NOTES:

1. LEVEE CONTROL POINTS ON WORK LIMITS SHEET C-10.
2. FOR SYMBOLS, ABBREVIATIONS, & GENERAL NOTES SEE SHEETS G-03 AND G-04.
3. FOR LEVEE TYPICAL SECTIONS SEE SHEET C-42.
4. RIPRAP SHALL BE INDOT "REVETMENT" GRADEATION RIPRAP.
5. PIPE BEDDING AND BACKFILL SHALL BE IMPERVIOUS MATERIAL EXCEPT FOR DRAINAGE FILL AREA.
6. FOR LEVEE 6N PLAN AND PROFILE DETAILS SEE SHEET C-25.
7. FOR TRENCH SECTION DETAILS, SEE SHEET C-42.
8. FOR PRE LOAD SEE C-43.

US Army Corps of Engineers
Chicago District

SYMBOL	AMENDMENT DESCRIPTION	DATE APPROVED	SYMBOL	DESCRIPTION	DATE APPROVED

DESIGNED BY: JAG
DATE: AUG 2007
DRAWN BY: DB
SCALE: AS SHOWN
CHECKED BY: WK
SOLICITATION NUMBER: W912P6-07-B-0006
SUBMITTED BY: JOHN GROBOSKI
DATE:

U.S. ARMY ENGINEER DISTRICT
CORPS OF ENGINEERS
CHICAGO, ILLINOIS

LITTLE CALUMET RIVER, INDIANA
LOCAL FLOOD PROTECTION
STAGE V, PHASE 2 - LEVEE

CULVERT 6-7C DETAIL - 24" RCP - 6N

SHEET REFERENCE NUMBER:
C-47
SHEET 51 OF 138

PLOT DATE: 8/3/2007
FILENAME: D:\working\dms10534\LCS5C47.DGN

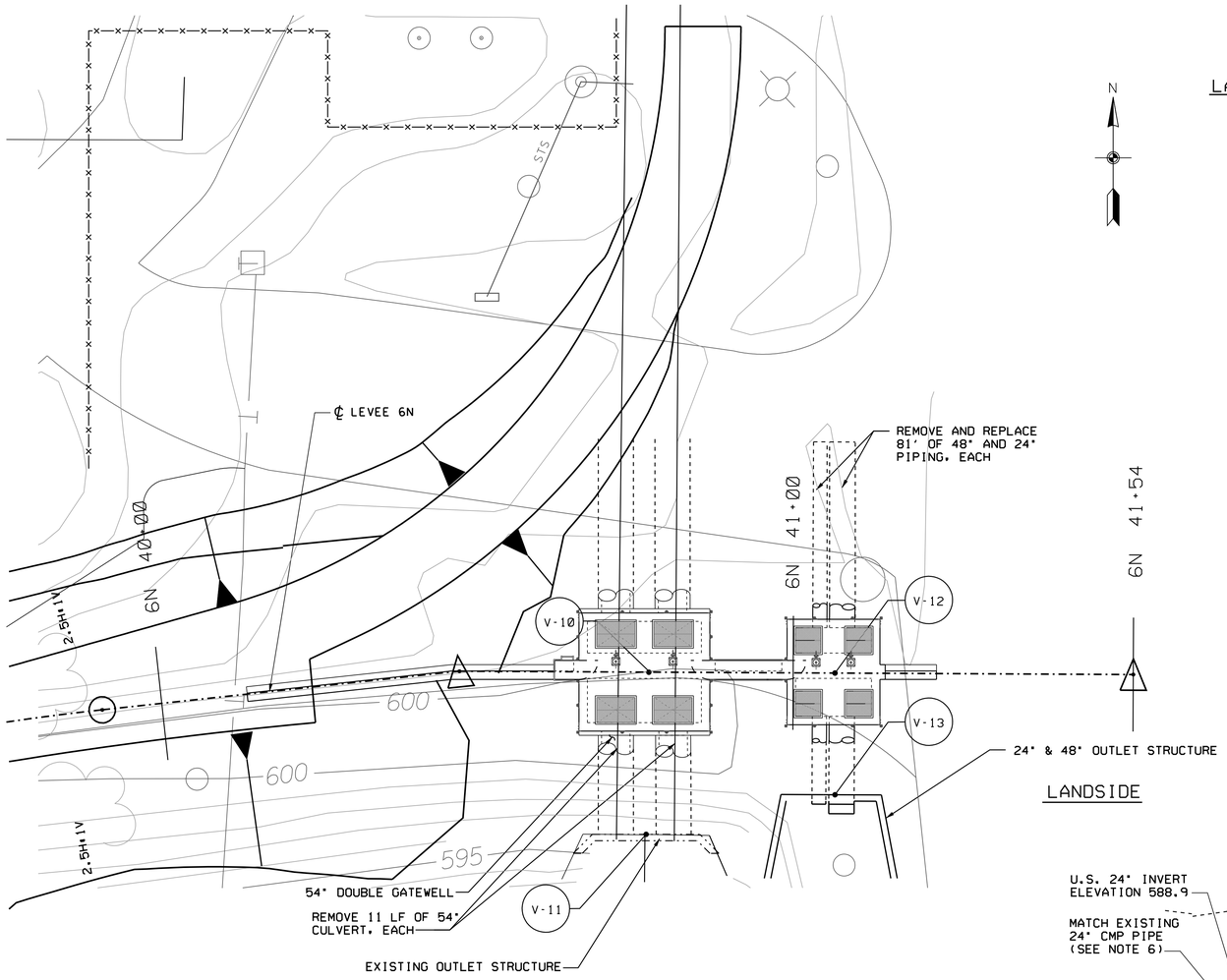

PLAN

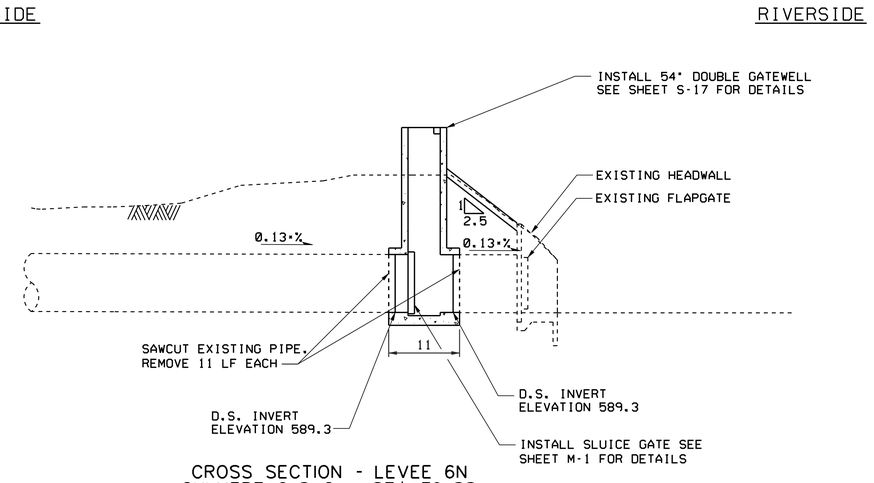

CROSS SECTION - LEVEE 6N
CULVERT 6-8 C @ STA. 39+88

VERTICAL 5 0 5 10FT SCALE: 1"= 5'

HORIZONTAL 10 5 0 10 20FT SCALE: 1"= 10'

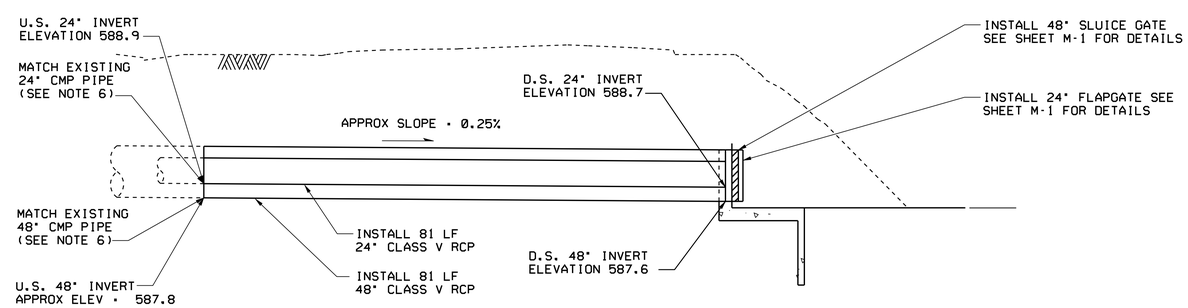

CROSS SECTION - LEVEE 6N
SOUTH KENNEDY AVE.
PUMPING STATION OUTFALL

VERTICAL 5 0 5 10FT SCALE: 1"= 5'

HORIZONTAL 10 5 0 10 20FT SCALE: 1"= 10'

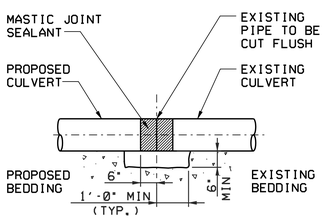

STEP 1

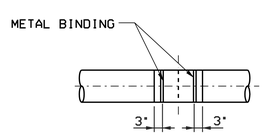

STEP 3

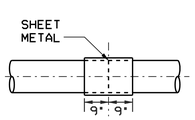

STEP 2

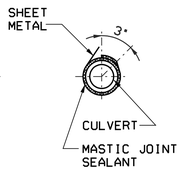

CONCRETE COLLAR

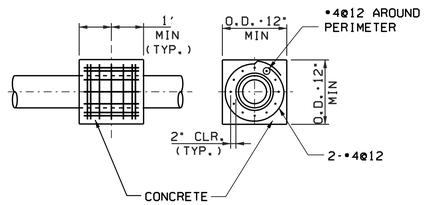

STEP 4

NOTES:

1. LEVEE CONTROL POINTS ON WORK LIMITS SHEET C-10.
2. FOR SYMBOLS, ABBREVIATIONS, & GENERAL NOTES SEE SHEETS G-03 AND G-04.
3. FOR LEVEE TYPICAL SECTIONS SEE SHEET C-42.
4. RIPRAP SHALL BE INDOT "CLASS 2" GRADATION RIPRAP.
5. PIPE BEDDING AND BACKFILL SHALL BE IMPERVIOUS MATERIAL.
6. USE CONCRETE COLLARS TO MEET EXISTING PIPES AND CULVERTS, SEE DETAIL THIS SHEET.
7. FOR LEVEE 6N PLAN AND PROFILE DETAILS SEE SHEET C-25.

DESCRIPTION	POINT #	NORTHING	EASTING
CL LEVEE AND CL CULVERT	V-10	1482632.65	396416.85
CENTER OUTLET STUCTURE	V-11	1482607.04	396416.42
CL LEVEE AND CL PUMPSTATION	V-12	1482632.52	396446.25
CENTER OUTLET STUCTURE	V-13	1482613.29	396446.25

US Army Corps of Engineers
Chicago District

SYMBOL	AMENDMENT DESCRIPTION	DATE APPROVED	SYMBOL	DESCRIPTION	DATE APPROVED

DESIGNED BY: JAG
DATE: AUG 2007
DRAWN BY: DB
SCALE: AS SHOWN
CHECKED BY: WK
SOLICITATION NUMBER: W912P6-07-B-0006
SUBMITTED BY: JOHN GROBOSKI
DATE:

U.S. ARMY ENGINEER DISTRICT
CORPS OF ENGINEERS
CHICAGO, ILLINOIS

LITTLE CALUMET RIVER, INDIANA
LOCAL FLOOD PROTECTION
STAGE V, PHASE 2 - LEVEE
CULVERT 6-8C
AND SOUTH KENNEDY AVE.
PUMPING STATION OUTFALL DETAILS
- 6N

SHEET REFERENCE NUMBER:
C-48
SHEET 52 OF 138

PLOT DATE: 8/6/2007
FILENAME: D:\working\dms10534\C55C48.DGN

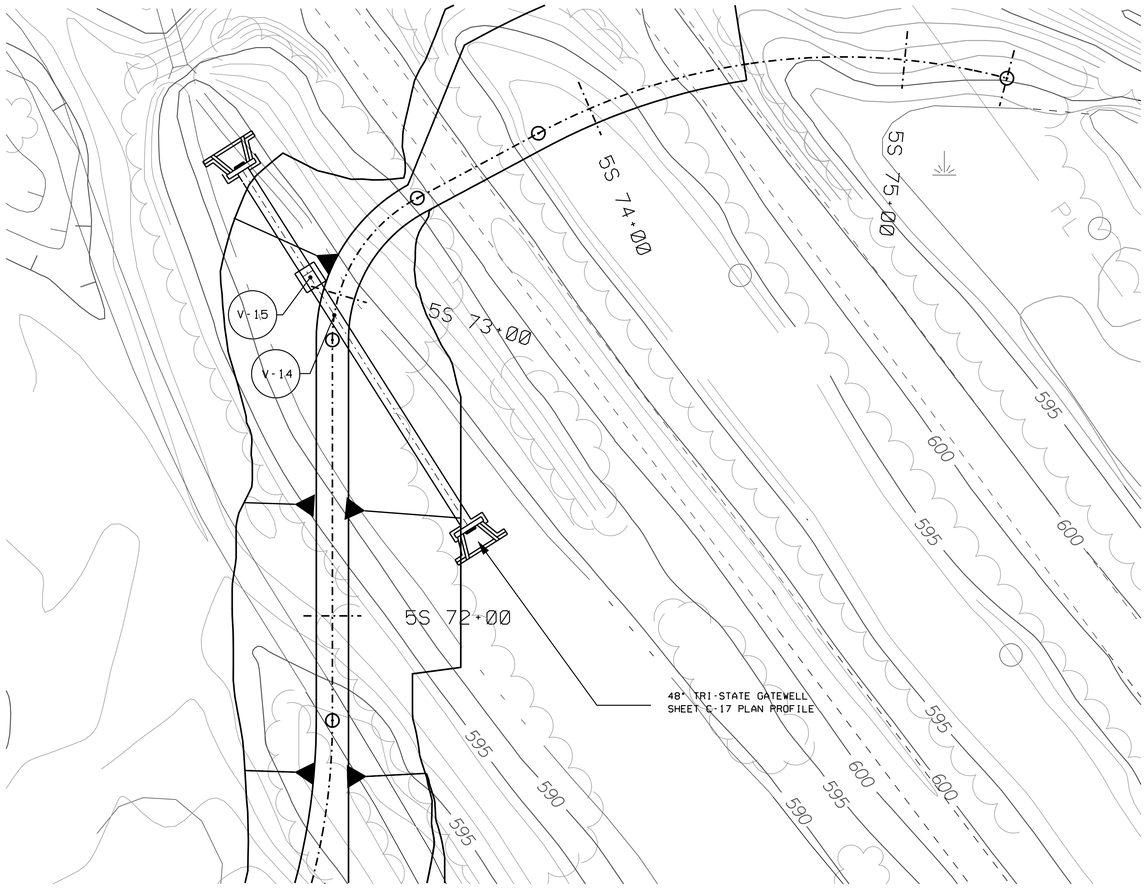

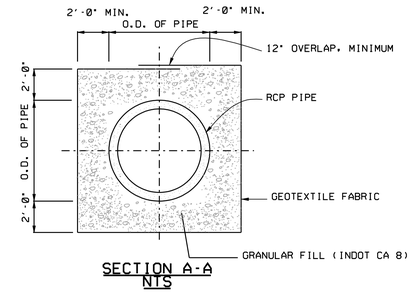

SECTION A-A
NTS

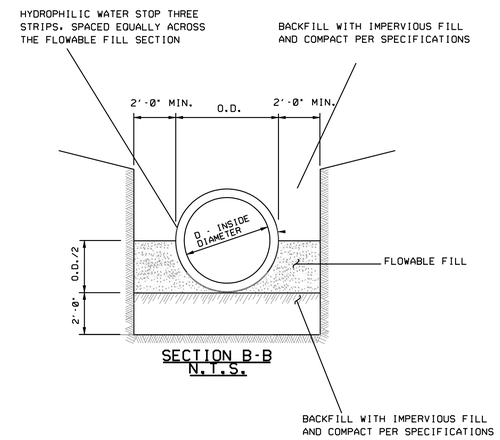

SECTION B-B
N.T.S.

DESCRIPTION	POINT #	NORTHING	EASTING
CL LEVEE AND CL GATEWELL	V-14	1481876.83	392586.11
CL GATEWELL AND CL CULVERT	V-15	1481888.58	392578.68

DETAIL 5S-73+00
GATEWELL PROFILE

20 10 0 20 40FT

SCALE: 1''= 20'

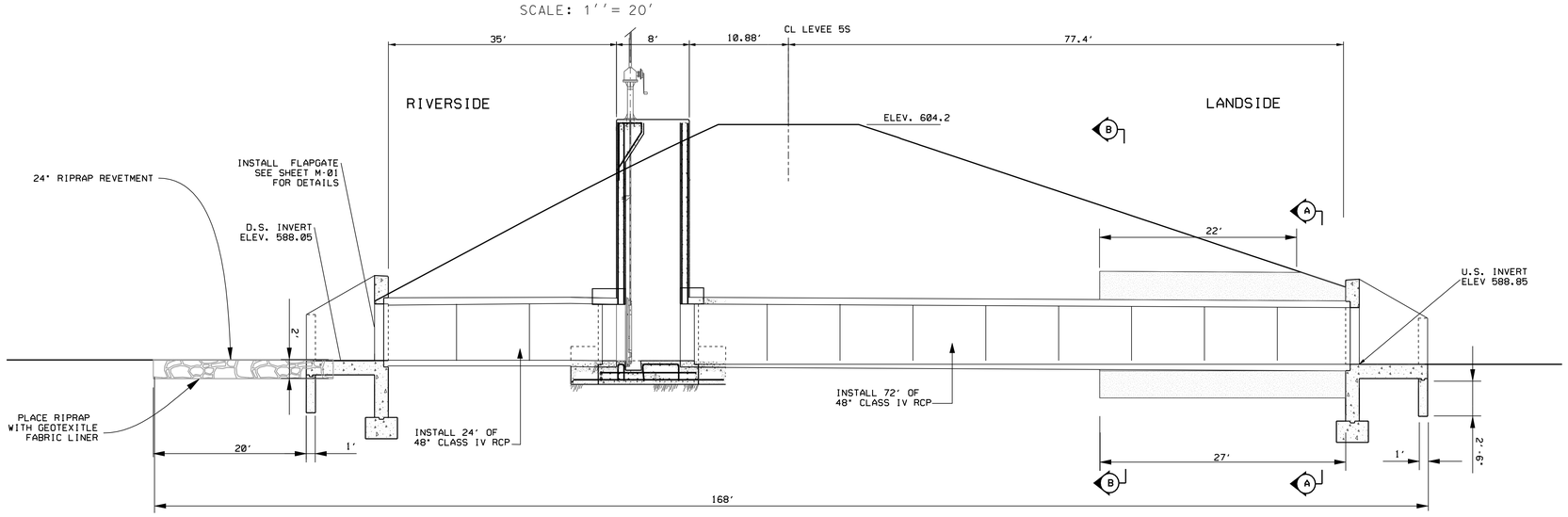

PROFILE 5S - 73+00
TRI STATE 48" GATEWELL
1 HORIZONTAL TO 1 VERTICAL

10 5 0 10 20FT

SCALE IN FEET

NOTES:

1. LEVEE AND DITCH CONTROL POINTS ARE LISTED ON WORK LIMITS SHEET C-17.
2. FOR SYMBOLS, ABBREVIATIONS, & GENERAL NOTES SEE SHEETS G-03 AND G-04.
3. FOR LEVEE AND DITCH TYPICAL SECTIONS SEE SHEET C-42.
4. RIPRAP SHALL BE RIPRAP REVETMENT SEE THIS SHEET.
5. PIPE BEDDING AND BACKFILL SHALL BE IMPERVIOUS MATERIAL EXCEPT FOR DRAINAGE FILL AREA.
6. FOR LEVEE 5N PLAN AND PROFILE DETAILS SEE SHEETS C-17 & C-19.
7. FOR TRENCH SECTION DETAILS, SEE SHEET C-42.
8. FOR PRE-LOAD SEE C-43.
9. REFERENCE S-11 FOR GATEWELL AND S-12 FOR HEADWALL.
10. WIDTH OF RIP-RAP OUTLET IS 11 FT.

US Army Corps of Engineers
Chicago District

SYMBOL	AMENDMENT DESCRIPTION	DATE APPROVED	SYMBOL	DESCRIPTION	DATE APPROVED

DESIGNED BY: JAG
DATE: AUG 2007
DRAWN BY: DB
SCALE: AS SHOWN
CHECKED BY: WK
SOLICITATION NUMBER: W912P6-07-B-0006
SUBMITTED BY: JOHN GROBOSKI
DATE:

U.S. ARMY ENGINEER DISTRICT
CORPS OF ENGINEERS
CHICAGO, ILLINOIS

LITTLE CALUMET RIVER, INDIANA
LOCAL FLOOD PROTECTION
STAGE V, PHASE 2 - LEVEE

5N TRISTATE
GATEWELL PROFILE
5S-73+00

SHEET REFERENCE NUMBER:
C-49

SHEET 53 OF 138

PLOT DATE: 8/3/2007
FILENAME: D:\working\dms10534\LCSSC49.DGN

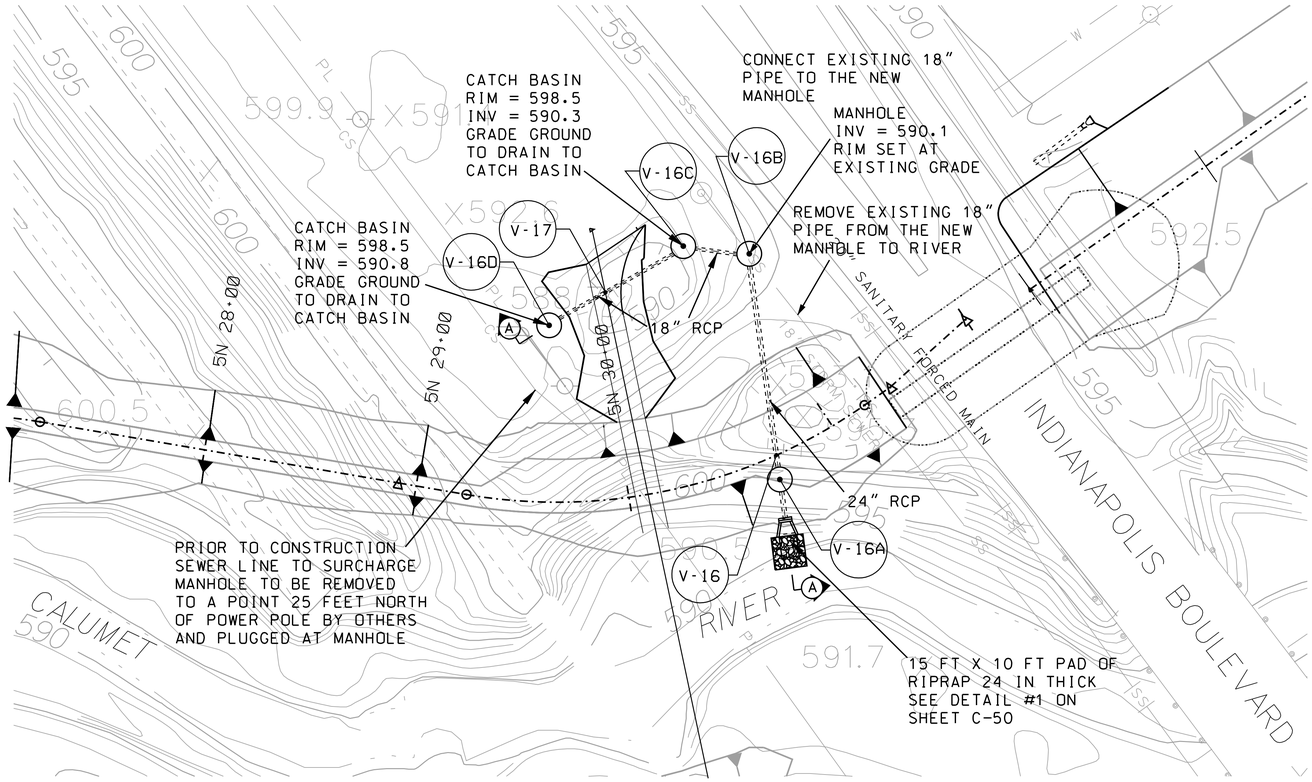

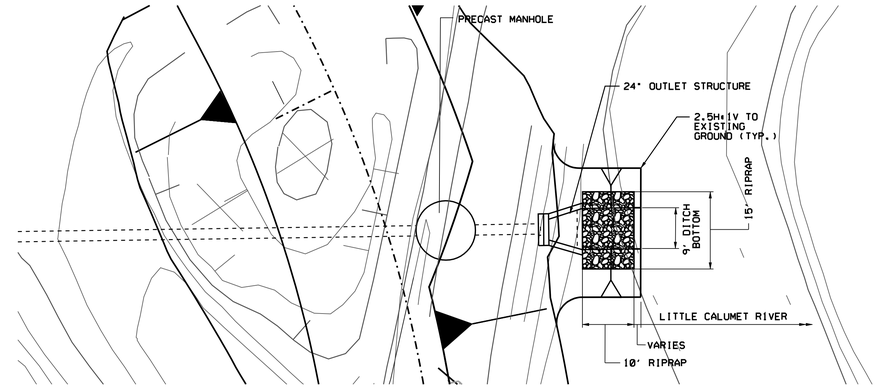

DETAIL #1
N.T.S

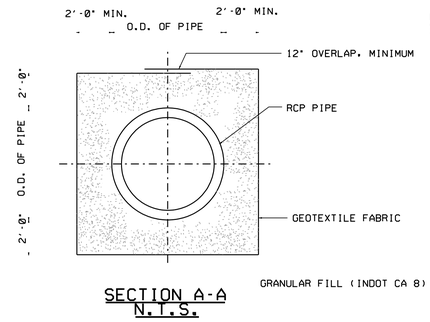

SECTION A-A
N.T.S.

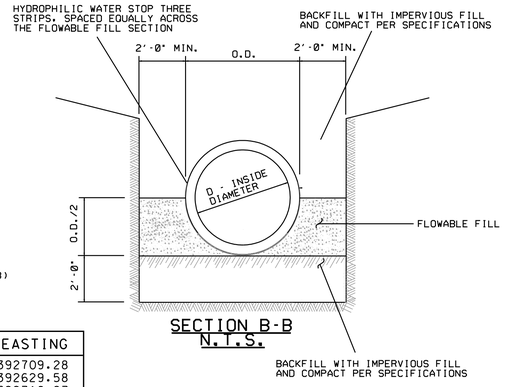

SECTION B-B
N.T.S.

DESCRIPTION	POINT #	NORTHING	EASTING
CL LEVEE AND CL CULVERT	V-16	1482156.11	392709.28
CL CULVERT AND CL 5N-E RAMP	V-17	1482231.91	392629.58
CL CULVERT AND CL MANHOLE	V-16A	1482144.73	392710.87
CL CULVERT AND CL MANHOLE	V-16B	1482249.89	392696.62
CL CULVERT AND CL MANHOLE	V-16C	1482253.47	392665.89
CL CULVERT AND CL MANHOLE	V-16D	1482216.56	392603.39

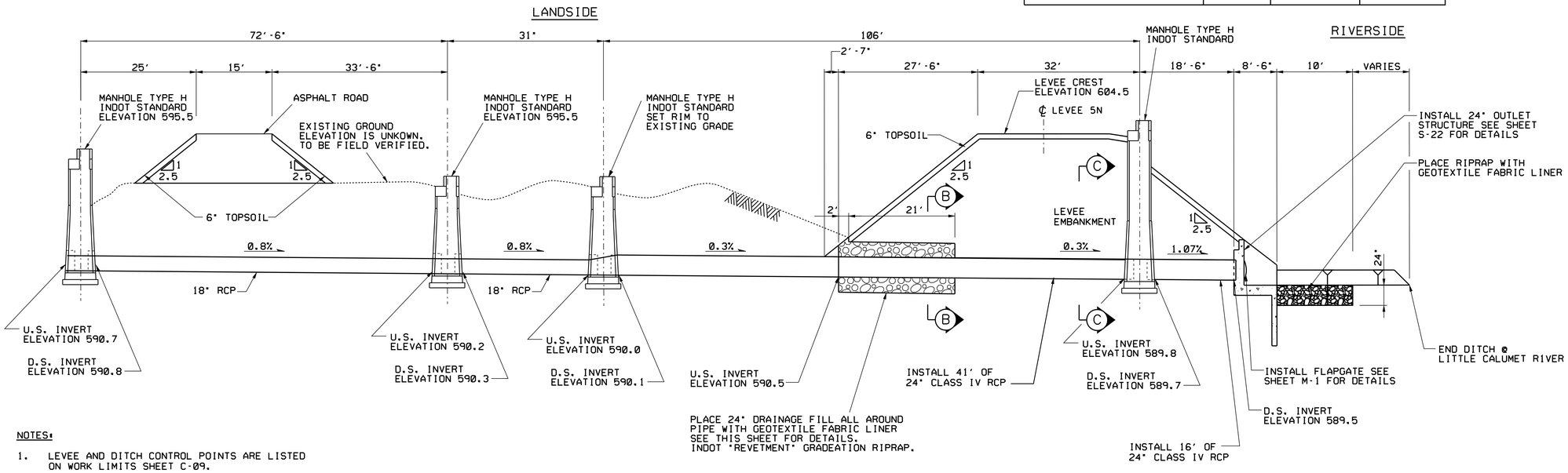

NOTES:

1. LEVEE AND DITCH CONTROL POINTS ARE LISTED ON WORK LIMITS SHEET C-09.
2. FOR SYMBOLS, ABBREVIATIONS, & GENERAL NOTES SEE SHEETS G-03 AND G-04.
3. FOR LEVEE AND DITCH TYPICAL SECTIONS SEE SHEET C-42.
4. RIPRAP SHALL BE INDOT "REVETMENT" GRADEATION RIPRAP.
5. PIPE BEDDING AND BACKFILL SHALL BE IMPERVIOUS MATERIAL EXCEPT FOR DRAINAGE FILL AREA.
6. FOR LEVEE 5N PLAN AND PROFILE DETAILS SEE SHEET C-21.
7. FOR TRENCH SECTION DETAILS, SEE SHEET C-42.

CROSS SECTION A-A - LEVEE 5N
MANHOLES AND DITCH
FROM STA. 5N 29+56 TO STA. 5N 30+87

VERTICAL 5 0 5 10FT
SCALE: 1" = 5'

HORIZONTAL 7'-6" 0 7'-6" 15FT
SCALE: 1" = 7'-6"

N

30 15 0 30 60
1 INCH = 30 FEET

US Army Corps of Engineers
Chicago District

SYMBOL	AMENDMENT DESCRIPTION	DATE APPROVED	SYMBOL	DESCRIPTION	DATE APPROVED

DESIGNED BY: JAG
DATE: AUG 2007
DRAWN BY: DB
SCALE: AS SHOWN
CHECKED BY: WK
SOLICITATION NUMBER: W912P6-07-B-0006
SUBMITTED BY: JOHN GROBOSKI
DATE:

U.S. ARMY ENGINEER DISTRICT
CORPS OF ENGINEERS
CHICAGO, ILLINOIS

LITTLE CALUMET RIVER, INDIANA
LOCAL FLOOD PROTECTION
STAGE V, PHASE 2 - LEVEE

CULVERT 5-7C DETAILS
- 24" AND 18" RCP - 5N

SHEET REFERENCE NUMBER:
C-50

PLOT DATE: 8/3/2007
FILENAME: D:\working\dms10534\LC55C50.DGN

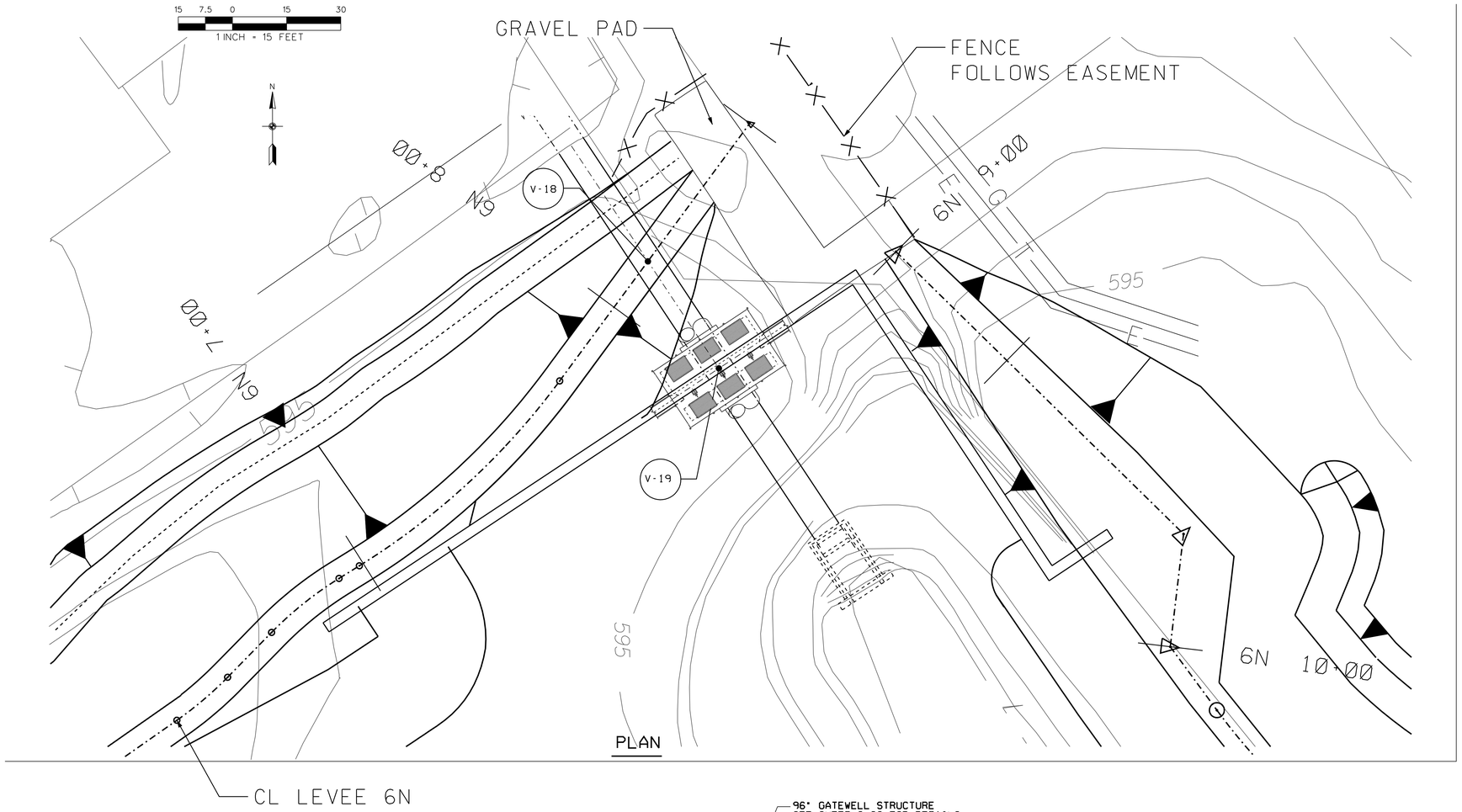

PLAN

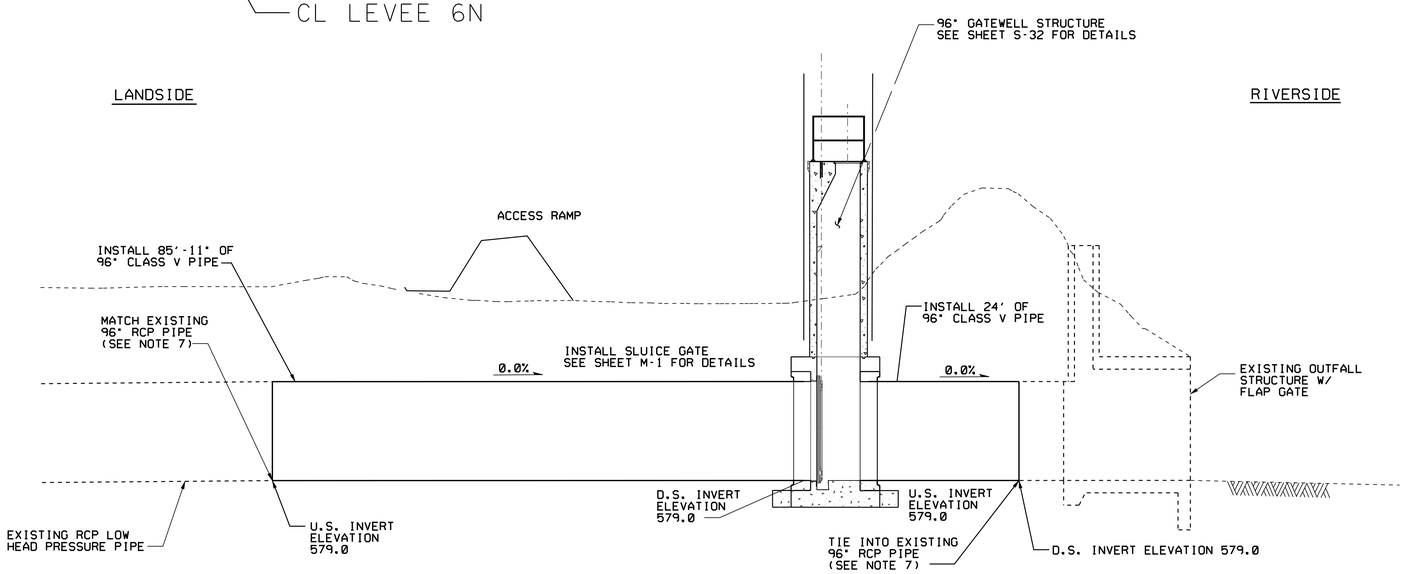

PROFILE - FLOODWALL 6N, INDIANAPOLIS BLVD. PUMPING STATION OUTFALL

NTS

NOTES:

1. LEVEE AND DITCH CONTROL POINTS ON WORK LIMITS SHEET C-09.
2. FOR SYMBOLS, ABBREVIATIONS, & GENERAL NOTES SEE SHEETS G-03 AND G-04.
3. FOR LEVEE TYPICAL SECTIONS SEE SHEET C-42.
4. PIPE BEDDING AND BACKFILL SHALL BE IMPERVIOUS MATERIAL.
5. FOR LEVEE 6N PLAN AND PROFILE DETAILS SEE SHEET C-22.
6. CONTRACTOR SHALL FIELD VERIFY LOCATION OF 96" PIPE AND ADJUST CONSTRUCTION OF THE GATEWELL TO MEET FIELD CONDITIONS.
7. USE CONCRETE COLLAR TO MEET EXISTING PIPE, SEE SHEET C-48 FOR DETAILS.

DESCRIPTION	POINT #	NORTHING	EASTING
CL GATEWELL AND CL RAMP 6N-W	V-18	1482723.12	393475.68
CL GATEWELL AND CL FLOODWALL	V-19	1482693.49	393495.32

US Army Corps of Engineers
Chicago District

SYMBOL	AMENDMENT DESCRIPTION	DATE APPROVED	SYMBOL	DESCRIPTION	DATE APPROVED

DESIGNED BY: JAG
DATE: AUG 2007
DRAWN BY: DB
SCALE: AS SHOWN
CHECKED BY: WK
SOLICITATION NUMBER: W912P6-07-B-0006
SUBMITTED BY: JOHN GROBOSKI
DATE:

U.S. ARMY ENGINEER DISTRICT
CORPS OF ENGINEERS
CHICAGO, ILLINOIS

LITTLE CALUMET RIVER, INDIANA
LOCAL FLOOD PROTECTION
STAGE V, PHASE 2 - LEVEE

INDIANAPOLIS BLVD
DETAIL - 96" RCP - 6N

SHEET REFERENCE NUMBER:
C-51
SHEET 55 OF 138

PLOT DATE: 8/6/2007
FILENAME: D:\working\cms10534\CS5C51.DGN

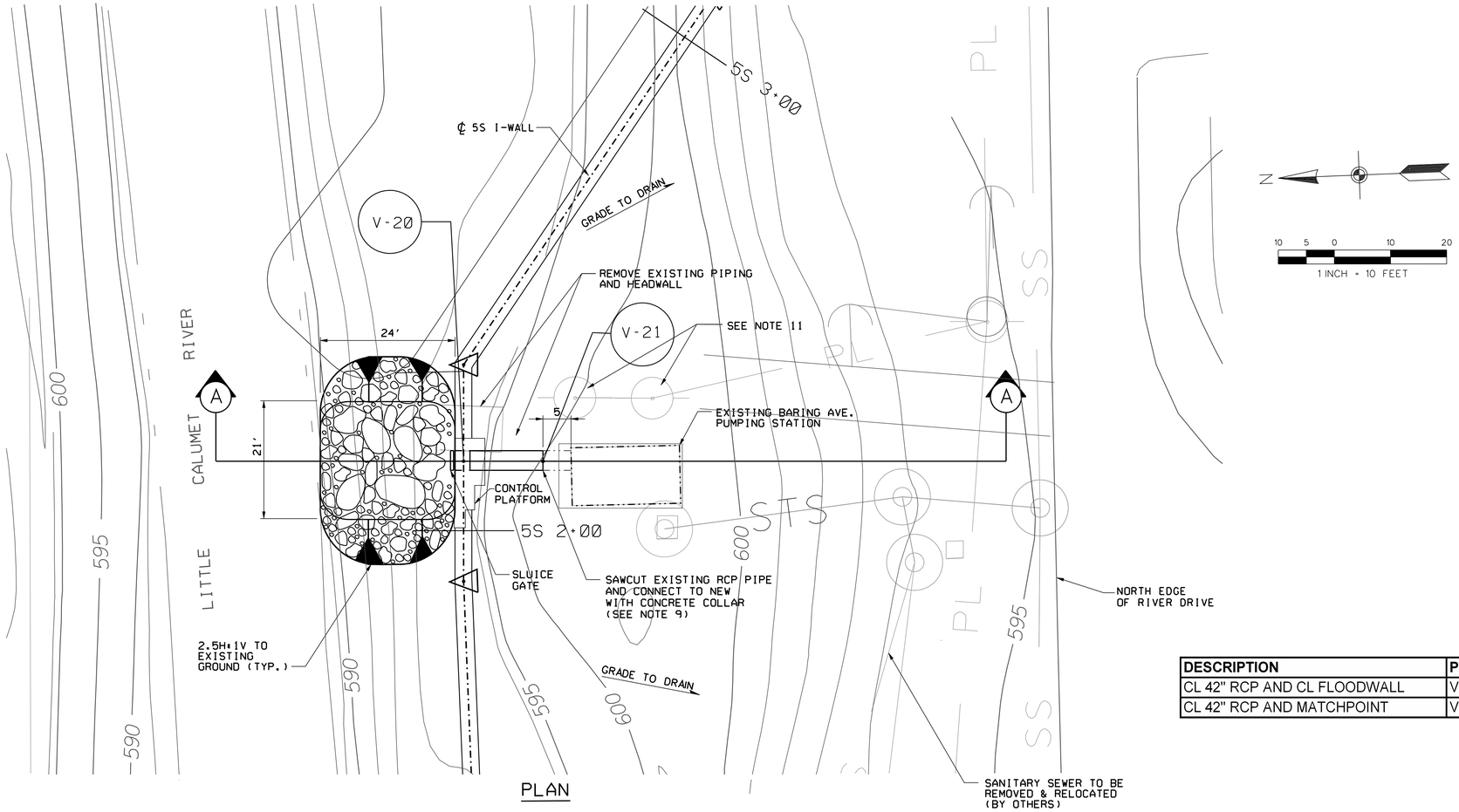

PLAN

DESCRIPTION	POINT #	NORTHING	EASTING
CL 42" RCP AND CL FLOODWALL	V20	1481398.88	390071.74
CL 42" RCP AND MATCHPOINT	V21	1481384.75	390071.18

RIVERSIDE LANDSIDE

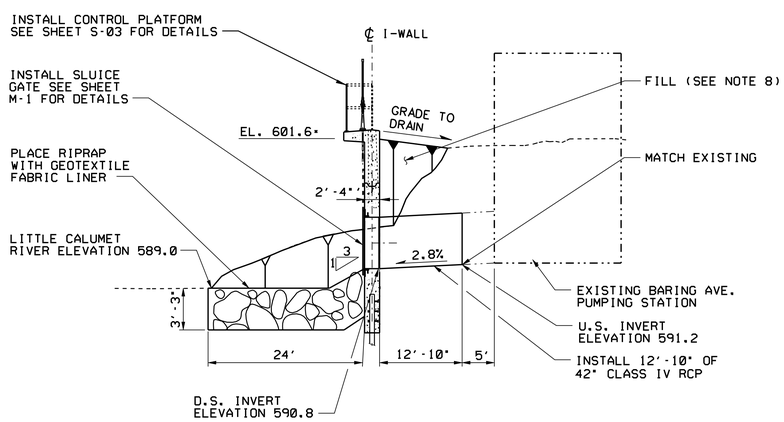

CROSS SECTION A-A - LEVEE 5S
BARING AVE. PUMPING STATION 42" OUTFALL @ STA. 5S 2+29

VERTICAL 5 0 5 10FT SCALE: 1"= 5'

HORIZONTAL 10 5 0 10 20FT SCALE: 1"= 10'

NOTES:

1. LEVEE, I-WALL, AND RECREATION TRAIL CONTROL POINTS ARE LISTED ON WORK LIMITS SHEET C-01.
2. FOR SYMBOLS, ABBREVIATIONS, AND GENERAL NOTES SEE SHEETS G-03 AND G-04.
3. FOR I-WALL DETAILS AND PROFILE SEE SHEETS S-01, S-02, S-03, S-07, AND S-09.
4. FOR RECREATION TRAIL DETAILS AND TYPICAL SECTION SEE SHEETS R-03, R-08, R-09, AND R-10.
5. RIPRAP SHALL BE INDOT "CLASS 2" GRADATION RIPRAP.
6. PIPE BEDDING AND BACKFILL SHALL BE IMPERVIOUS MATERIAL.
7. FOR I-WALL 5S PLAN AND PROFILE DETAILS SEE SHEET C-11.
8. FILL SHALL BE APPROVED JOB EXCAVATED MATERIAL OR LEVEE EMBANKMENT AND SHALL MEET LEVEE COMPACTION REQUIREMENTS.
9. FOR CONCRETE COLLAR DETAILS SEE SHEET C-48.
10. CONTRACTOR SHALL PROVIDE TEMPORARY BYPASS PUMP AS DESCRIBED IN SPECIFICATIONS.
11. CONTRACTOR SHALL PROTECT AND PROVIDE TEMPORARY SUPPORT FOR UTILITY POLES DURING CONSTRUCTION.
12. FOR TRENCH SECTION DETAILS, SEE SHEET C-42.

US Army Corps of Engineers
Chicago District

SYMBOL	AMENDMENT DESCRIPTION	DATE APPROVED	SYMBOL	DESCRIPTION	DATE APPROVED

DESIGNED BY: JAG
DATE: AUG 2007
DRAWN BY: DB
SCALE: AS SHOWN
CHECKED BY: WK
SOLICITATION NUMBER: W912P6-07-B-0006
SUBMITTED BY: JOHN GROBOSKI
DATE:

U.S. ARMY ENGINEER DISTRICT
CORPS OF ENGINEERS
CHICAGO, ILLINOIS

LITTLE CALUMET RIVER, INDIANA
LOCAL FLOOD PROTECTION
STAGE V, PHASE 2 - LEVEE

BARING AVE. PUMPING STATION
OUTFALL DETAIL - 5S

SHEET REFERENCE NUMBER:
C-52
SHEET 56 OF 138

PLOT DATE: 8/3/2007
FILENAME: D:\working\dms10534\LCS5C52.DGN

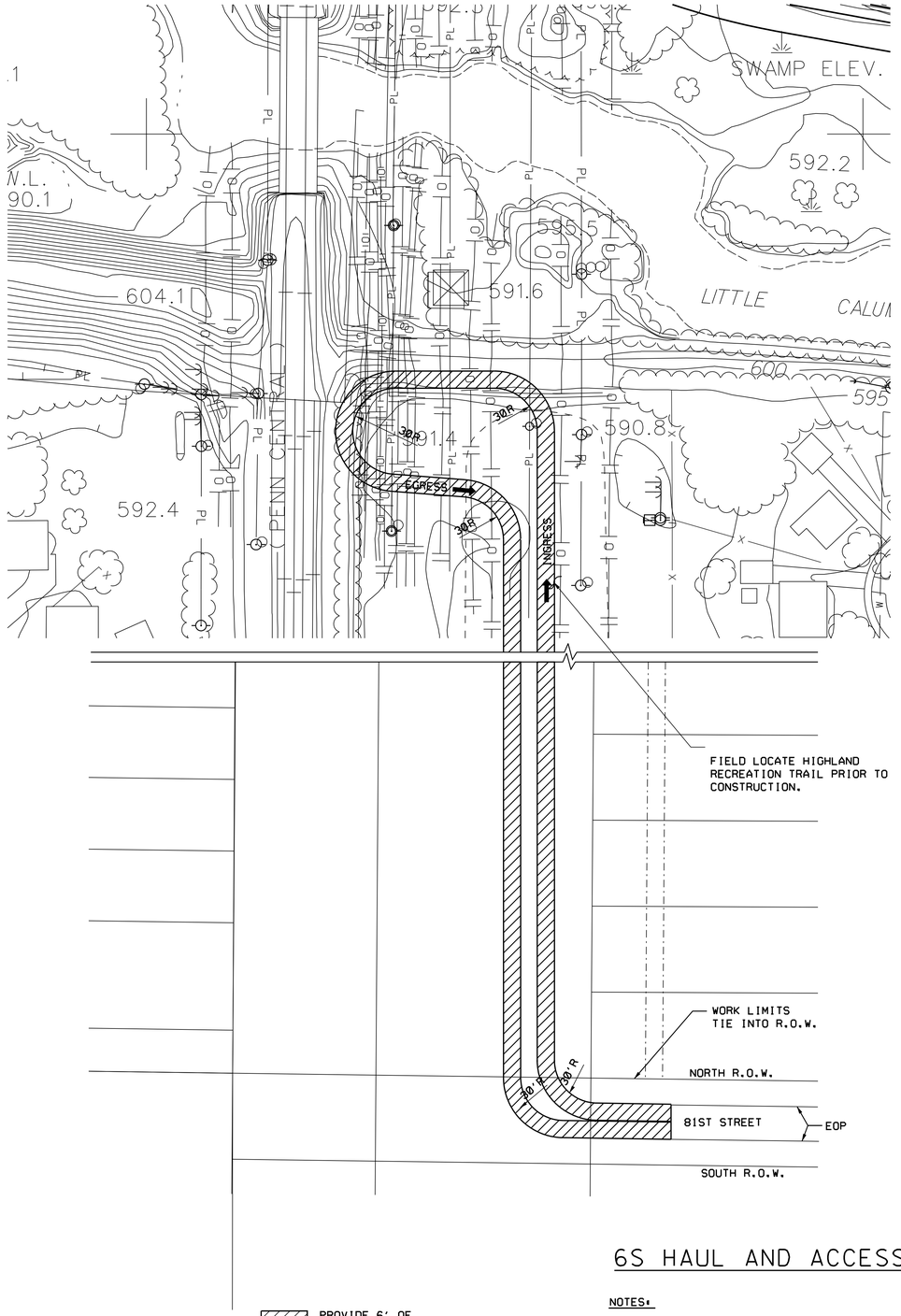

6S HAUL AND ACCESS ROUTE

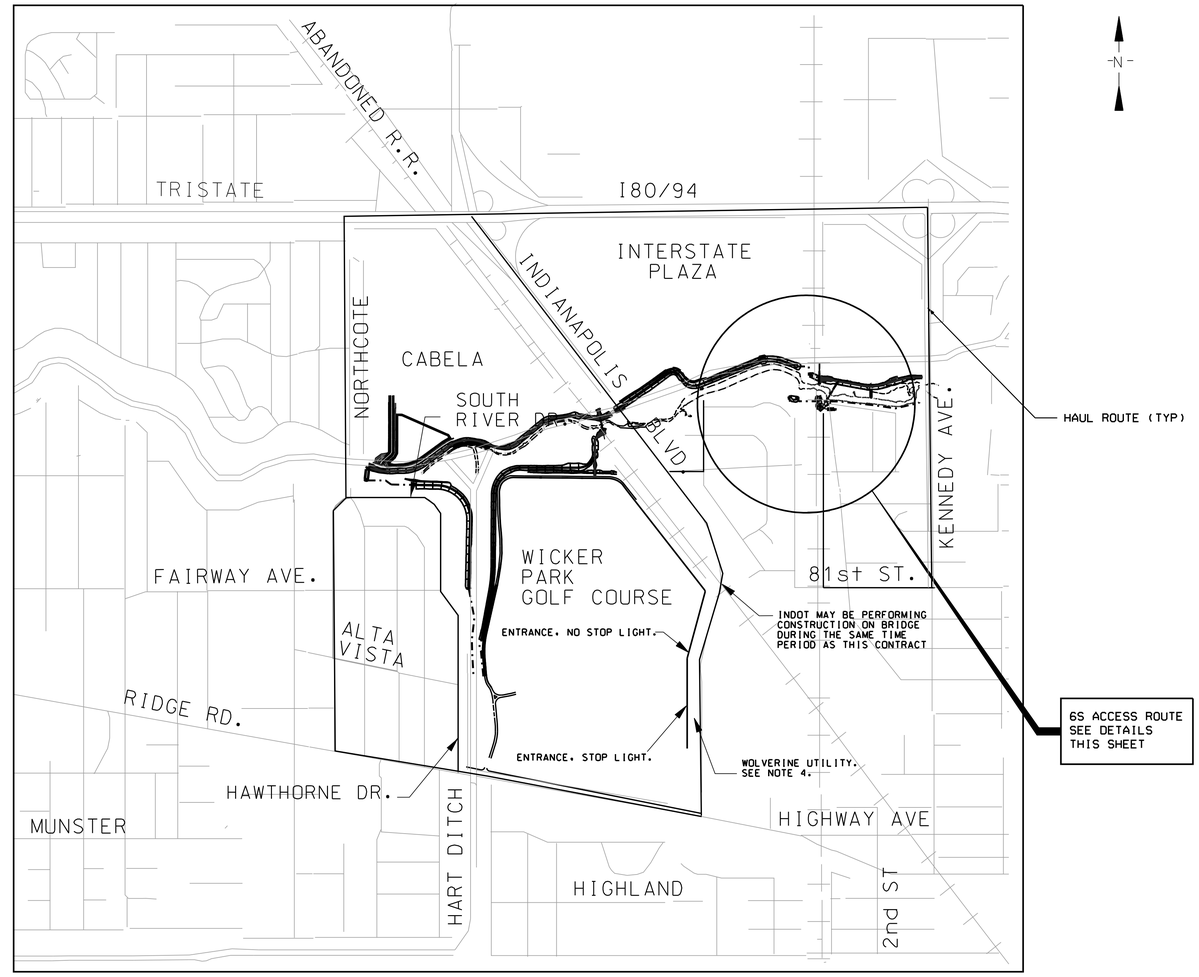

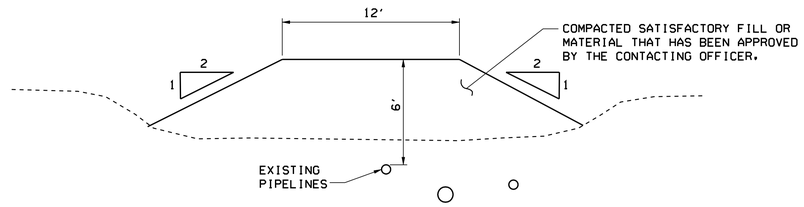

6S TYPICAL ROAD TEMPLATE

NOT TO SCALE

NOTES:

1. CONTRACTOR SHALL OBTAIN PERMITS FROM EACH MUNICIPALITY RECEIVING CONSTRUCTION TRAFFIC AND COORDINATE WITH INDOT FOR USE OF ALL STATE ROUTES. THERE MAY BE CONSTRUCTION ON IND BLVD DURING THIS CONTRACT.

2. CONTRACTOR SHALL PROVIDE A MINIMUM OF 6' OF COVER OVER UTILITIES WHEN CONSTRUCTION TRAFFIC IS PRESENT.

3. CONTRACTOR SHALL REMOVE ALL FILL MATERIAL PLACED OVER UTILITIES AND RESTORE HIGHLAND RECREATION TRAIL AND NIPSCO ROW TO PRECONSTRUCTION CONDITIONS. JOB EXCAVATED WILL BE ALLOWED WITH APPROVAL OF THE CONTRACTING OFFICER.

4. CONTRACTOR SHALL COORDINATE WITH DENNIS SIMALA FROM NORTH TOWNSHIP. SEE SHEET G-04 FOR CONTRACT INFORMATION. FOR ACCESS TO THE LEVEE \ I-WALL CONSTRUCTION OF ALIGNMENT 5S EAST OF HARTS DITCH. CONTRACTOR SHALL INSTALL TEMPORARY CONSTRUCTION FENCING ALONG THE WOLVERINE PIPELINE.

5. NORTHCOTE MAY NOT BE ACCESSIBLE AS A HAUL ROUTE. CONTRACTOR SHALL COORDINATE WITH THE CITY OF HAMMOND.

6. IT THE OPTION FOR THE WORK WITHIN THE UTILITY COORIDOR IS NOT EXERCISED. THE CONTRACTOR SHALL ACCESS 6S. DIRECTLY OFF OF KENNEDY AVE. CONTRACTOR SHALL COORDINATE WITH THE CITY OF HAMMOND.

US Army Corps of Engineers
Chicago District

SYMBOL	AMENDMENT DESCRIPTION	DATE APPROVED	SYMBOL	DESCRIPTION	DATE APPROVED

DESIGNED BY: JAG
DATE: AUG 2007
DRAWN BY: DB
SCALE: AS SHOWN
CHECKED BY: WK
SOLICITATION NUMBER: W912P6-07-B-0006
SUBMITTED BY: JOHN GROBOSKI
DATE:

U.S. ARMY ENGINEER DISTRICT
CORPS OF ENGINEERS
CHICAGO, ILLINOIS

LITTLE CALUMET RIVER, INDIANA
LOCAL FLOOD PROTECTION
STAGE V, PHASE 2 - LEVEE

HAUL ROUTE AND CONSTRUCTION ACCESSSHEET

SHEET REFERENCE NUMBER:
C-53
SHEET 57 OF 138

PLOT DATE: $DATE$
FILENAME: $FILENAME$

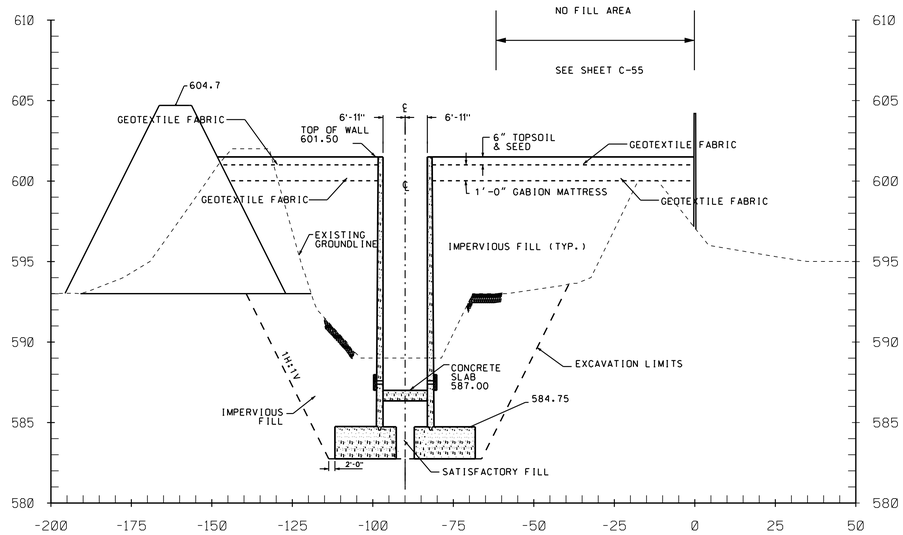

5S 3+70
APPROX STA 5N 3+44.95

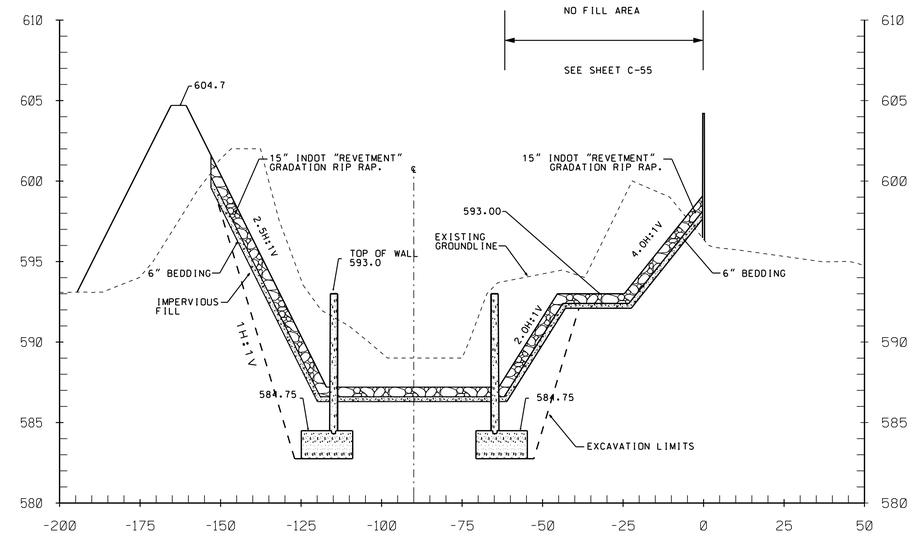

5S 3+96

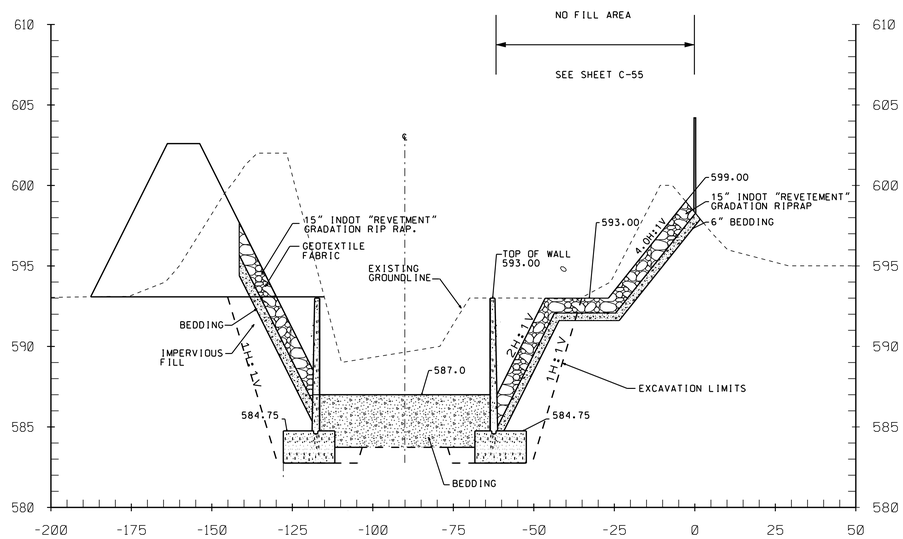

5S 3+45

20 10 0 20 40
1 INCH = 20 FEET (HORIZONTAL)

10 2.5 0 05 10
1 INCH = 05 FEET (VERTICAL)

NOTES:

1) CROSS SECTIONS TAKEN ALONG ALIGNMENT CHAIN 5S.
SEE SHEET C-56.

2) FOR RIP RAP PLACEMENT AND THICKNESS, SEE SECTION "RIP-RAP FOR EROSION CONTROL" AND "WIRE MESH GABION MATTRESSES" IN THE SPECIFICATIONS AND SHEET S-22 AND S-23.

US Army Corps of Engineers
Chicago District

SYMBOL	AMENDMENT DESCRIPTION	DATE APPROVED	SYMBOL	DESCRIPTION	DATE APPROVED

DESIGNED BY: JAG
DATE: AUG 2007
DRAWN BY: DB
SCALE: AS SHOWN
CHECKED BY: WK
SOLICITATION NUMBER: W912P6-07-B-0006
SUBMITTED BY: JOHN GROBOSKI
DATE:

U.S. ARMY ENGINEER DISTRICT
CORPS OF ENGINEERS
CHICAGO, ILLINOIS

LITTLE CALUMET RIVER, INDIANA
LOCAL FLOOD PROTECTION
STAGE V, PHASE 2 - LEVEE

HART DITCH
CONTROL STRUCTURE
CROSS SECTION

SHEET REFERENCE NUMBER:
C-54
SHEET 58 OF 138

PLOT DATE: 8/6/2007
FILENAME: D:\working\dms10534\CS5C54.DGN

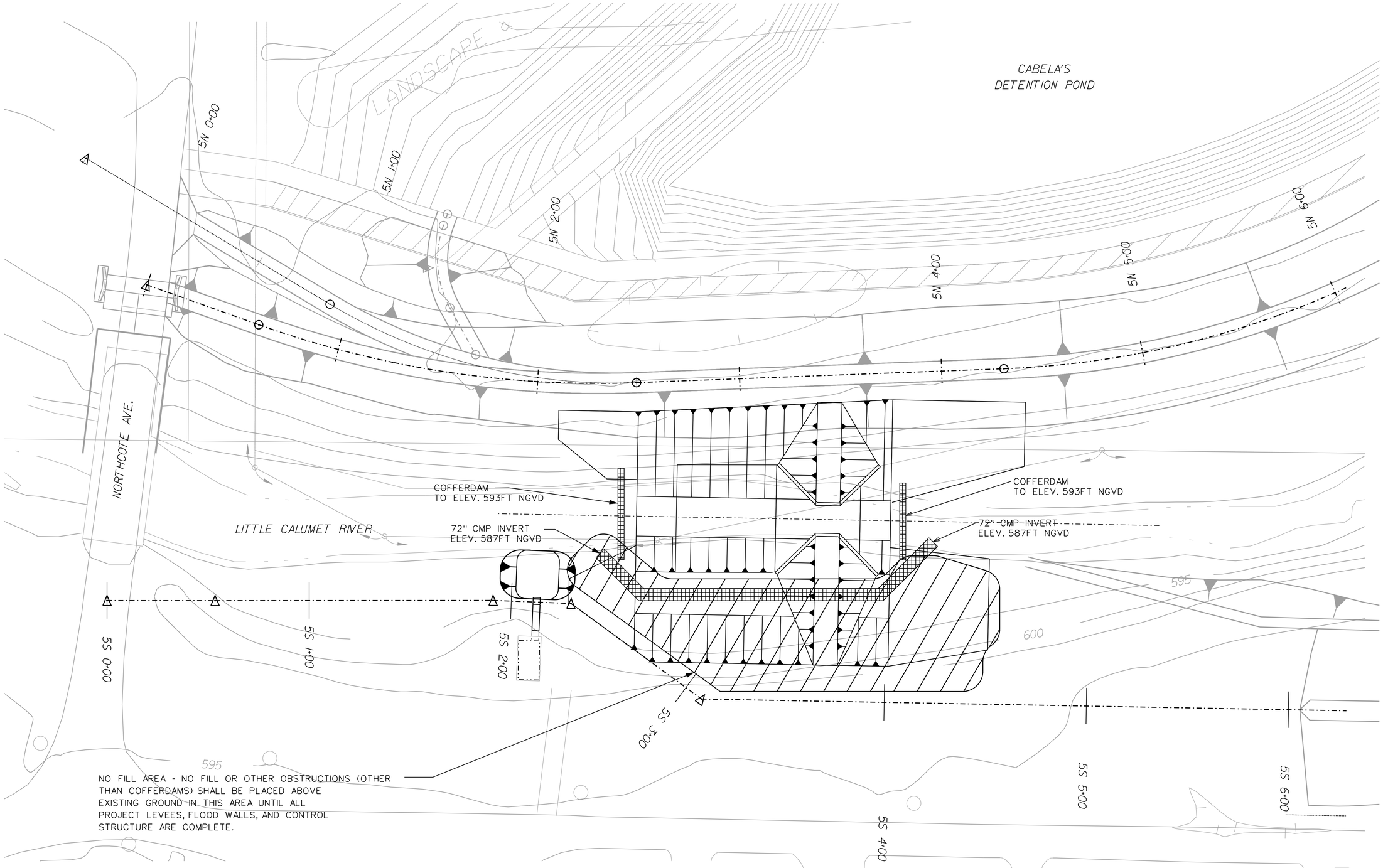

NO FILL AREA - NO FILL OR OTHER OBSTRUCTIONS (OTHER THAN COFFERDAMS) SHALL BE PLACED ABOVE EXISTING GROUND IN THIS AREA UNTIL ALL PROJECT LEVEES, FLOOD WALLS, AND CONTROL STRUCTURE ARE COMPLETE.

NOTE:

THE COFFERDAMS AND BYPASS CULVERT SHOWN ARE CONCEPTUAL ONLY. CONTRACTOR WILL DESIGN COFFERDAMS AND TEMPORARY CULVERT BYPASS. COFFERDAM WILL HAVE A MAXIMUM CREST ELEVATION OF 593 ft NGVD. CULVERT BYPASS WILL BE 72" DIAMETER CORREGATED METAL PIPE WITH INVERT ELEVATIONS AT 587 ft NGVD AT EACH END (CAN BE LOWER IN THE MIDDLE TO INCREASE COVER OVER THE PIPE, i.e. CAN OPERATE AS A SAG PIPE). CONTRACTOR WILL ALSO DESIGN EROSION PROTECTION AS NECESSARY FOR THE OUTLET END (WEST END) OF THE BYPASS CULVERT ASSUMING A MAXIMUM FLOW OF 250 CFS THROUGH THE PIPE WITH A STAGE OF 593 ft NGVD AT THE DOWNSTREAM END.

N

20 10 0 20 40
1 INCH = 20 FEET

US Army Corps of Engineers
Chicago District

SYMBOL	AMENDMENT DESCRIPTION	DATE APPROVED	SYMBOL	DESCRIPTION	DATE APPROVED

DESIGNED BY: JAG
DATE: AUG 2007
DRAWN BY: DB
SCALE: AS SHOWN
CHECKED BY: WK
SOLICITATION NUMBER: W912P6-07-B-0006
SUBMITTED BY: JOHN GROBOSKI
DATE:

U.S. ARMY ENGINEER DISTRICT
CORPS OF ENGINEERS
CHICAGO, ILLINOIS

LITTLE CALUMET RIVER, INDIANA
LOCAL FLOOD PROTECTION
STAGE V, PHASE 2 - LEVEE

HART DITCH CONTROL
STRUCTURE TEMPORARY
WATER CONTROL STRUCTURE

SHEET REFERENCE NUMBER:
C-55
SHEET 59 OF 138

PLOT DATE: 8/6/2007
FILENAME: D:\working\dms10534\LCS5C55.DGN

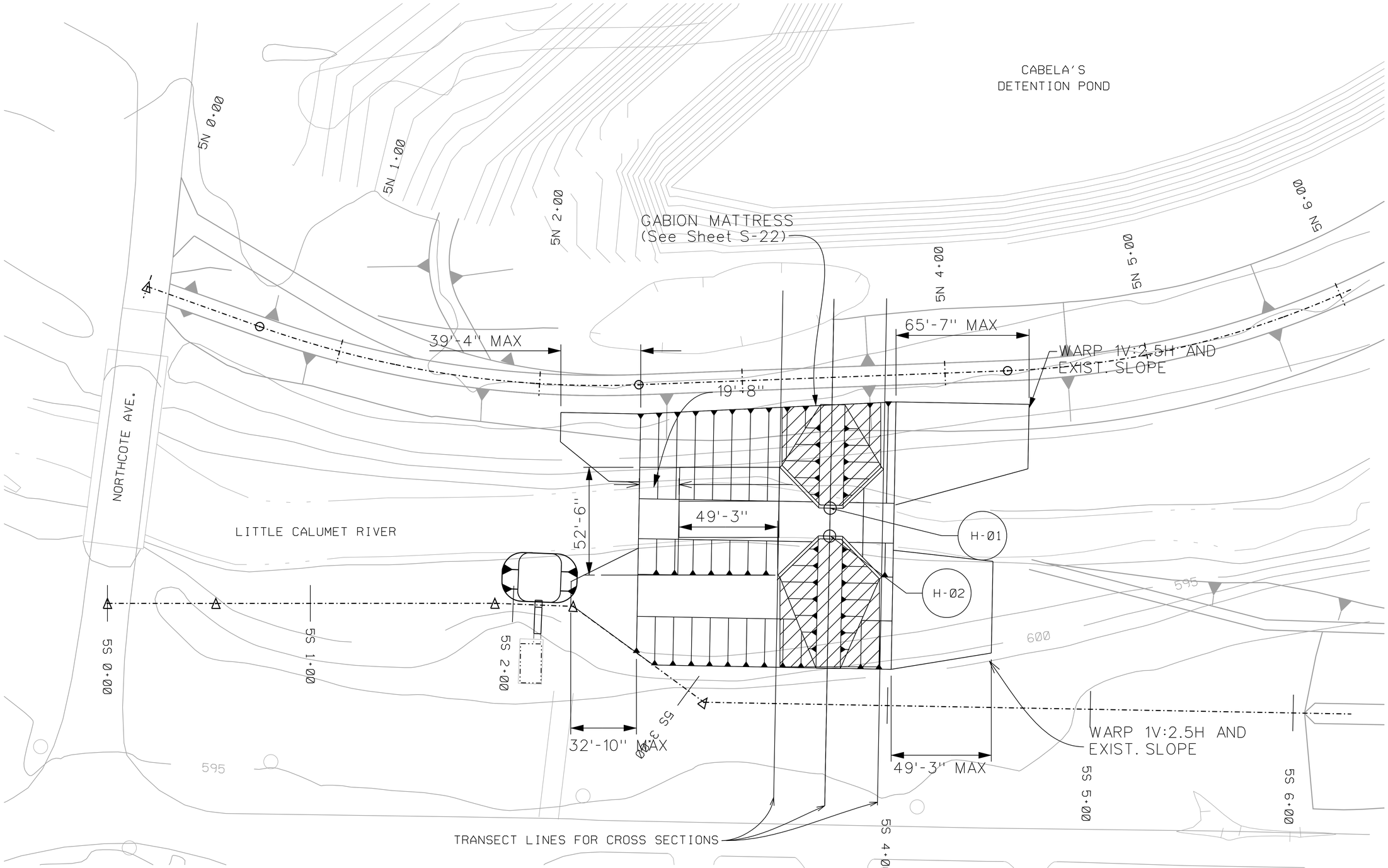

STRUCTURE	STATION	POINT TAKEN AT INTERSECTION		POINT #	NORTHING	EASTING
		FIRST LINE	SECOND LINE			
HARTS DITCH NORTH WING WALL	5S 39+85.56	TRANSECT AT 5S 39+85.56	NORTH - INSIDE FACE OF WINGWALL	H-01	1,481,446.63	390,215.62
HARTS DITCH SOUTH WING WALL	5S 39+85.56	TRANSECT AT 5S 39+85.56	SOUTH - INSIDE FACE OF WINGWALL	H-02	1,481,432.86	390,215.37

NOTES:

1. ALL FEATURES FOR THE HARTS DITCH CONTROL STRUCTURE ARE BASED ON THE H-01 AND H-02. DIMENSIONS ARE PROVIDED ON SHEET C-02 AND S-22 TO S-24

N

20 10 0 20 40
1 INCH = 20 FEET

US Army Corps of Engineers
Chicago District

SYMBOL	AMENDMENT DESCRIPTION	DATE APPROVED	SYMBOL	DESCRIPTION	DATE APPROVED

DESIGNED BY: JAG
DATE: AUG 2007
DRAWN BY: DB
SCALE: AS SHOWN
CHECKED BY: WK
SOLICITATION NUMBER: W912P6-07-B-0006
SUBMITTED BY: JOHN GROBOSKI
DATE:

U.S. ARMY ENGINEER DISTRICT
CORPS OF ENGINEERS
CHICAGO, ILLINOIS

LITTLE CALUMET RIVER, INDIANA
LOCAL FLOOD PROTECTION
STAGE V, PHASE 2 - LEVEE

HART DITCH CONTROL STRUCTURE
SITE PLAN

SHEET REFERENCE NUMBER:
C-56
SHEET 60 OF 138

PLOT DATE: 8/3/2007
FILENAME: D:\working\dms10534\LCS5C56.DGN

COORDINATES

ALIGNMENT	POINT	LABEL	STATION	N	E
5N-W-NORTHCOTE RAMP	PI	A1	0+52.41	1481591.7	389893.9
5N-W-NORTHCOTE RAMP	PC	A2	1+40.70	1481546.3	389969.7
5N-W-NORTHCOTE RAMP	PI	A3	2+22.35	1481504.4	390039.7
5N-W-NORTHCOTE RAMP	PT	A4	2+99.44	1481507.5	390121.3

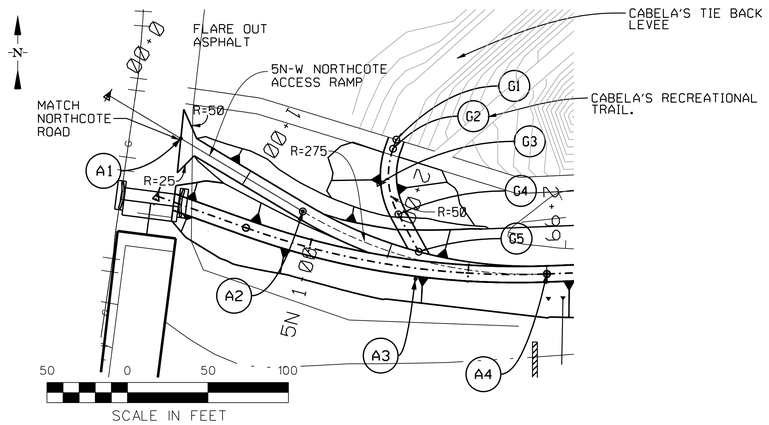

ALIGNMENT	POINT	LABEL	N	E
5N-W-NORTHCOTE CABELA TIE BACK	PI	G1	1481590.98	390027.78
5N-W-NORTHCOTE CABELA TIE BACK	PC	G2	1481585.3	390025.76
5N-W-NORTHCOTE CABELA TIE BACK	PI	G3	1481564.18	390018.23
5N-W-NORTHCOTE CABELA TIE BACK	PI	G4	1481544.5	390029.01
5N-W-NORTHCOTE CABELA TIE BACK	PI	G5	1481521.31	390041.71

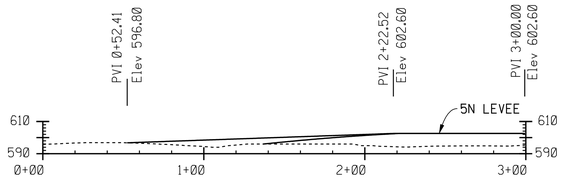

PROFILE ALONG 5N-W-NORTHCOTE RAMP
1 VERTICAL TO 1 HORIZONTAL

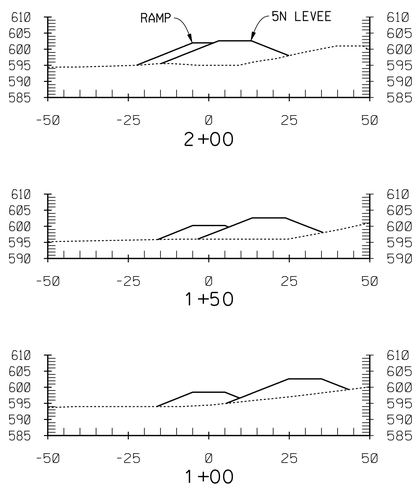

CROSS SECTION ALONG 5N-W-NORTHCOTE RAMP
1 VERTICAL TO 1 HORIZONTAL

ASPHALT LIMITS

ALIGNMENT	BEGIN STA.	END STA.
5N-W-NORTHCOTE	0+52.41	1+85.5
5S-E-PARKWAY RAMP	2+33	4+73.38
5N-E-INDIANAPOLIS	0+15.57	1+07.03

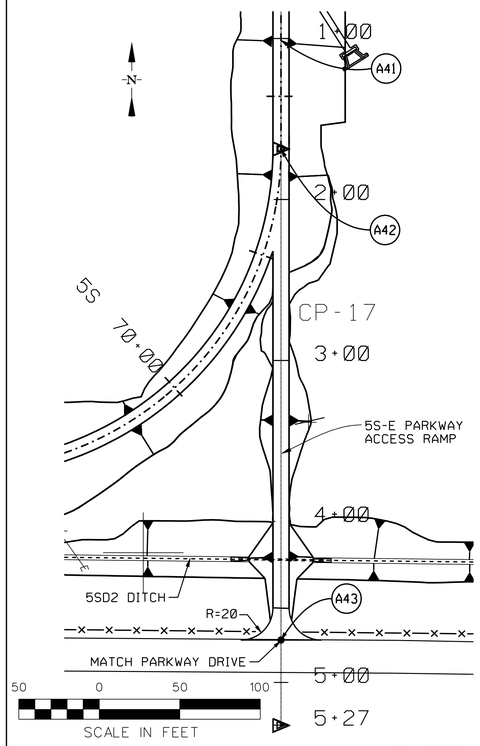

COORDINATES

ALIGNMENT	POINT	LABEL	STATION	N	E
5S-E-PARKWAY RAMP	PI	A41	1+00.98	1481818.4	392585.5
5S-E-PARKWAY RAMP	PI	A42	1+68.47	1481750.9	392585.5
5S-E-PARKWAY RAMP	PI	A43	4+73.38	1481446.0	392585.5

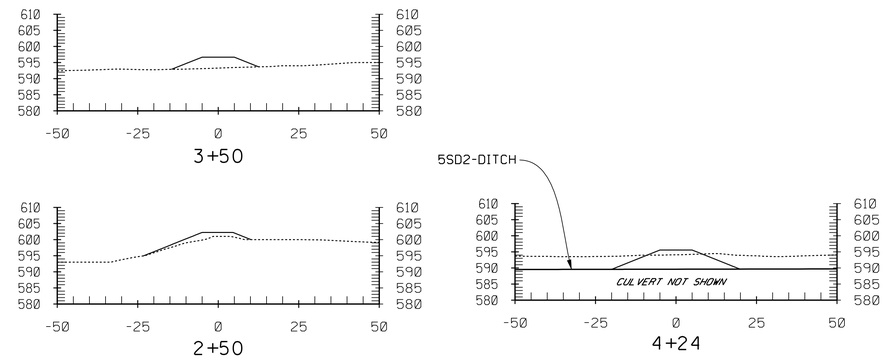

CROSS SECTION ALONG 5S-E PARKWAY RAMP
1 VERTICAL TO 1 HORIZONTAL

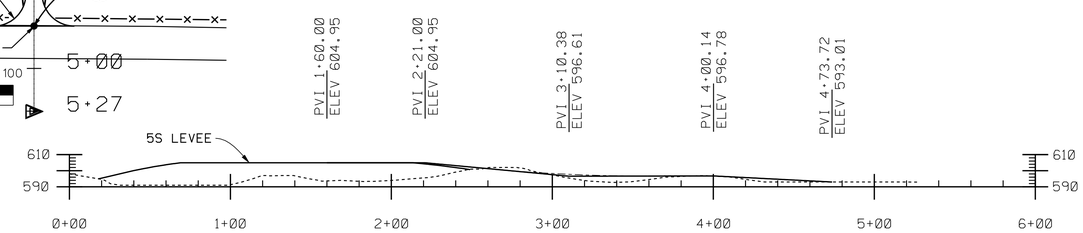

PROFILE ALONG 5S-E PARKWAY RAMP
1 VERTICAL TO 1 HORIZONTAL

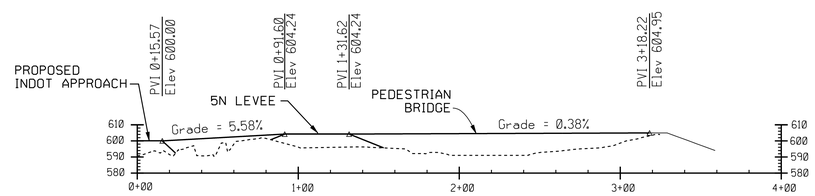

PROFILE ALONG 5N-E INDIANAPOLIS RAMP
1 VERTICAL TO 1 HORIZONTAL

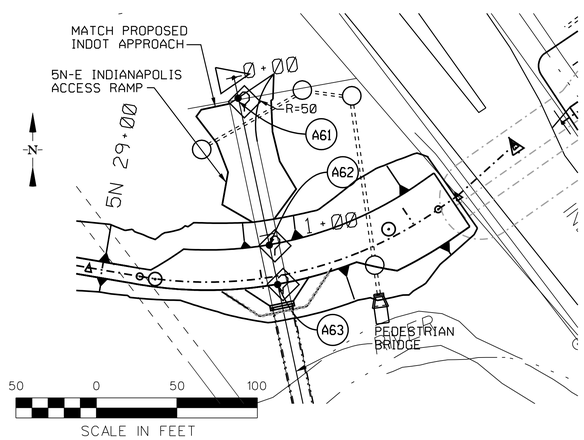

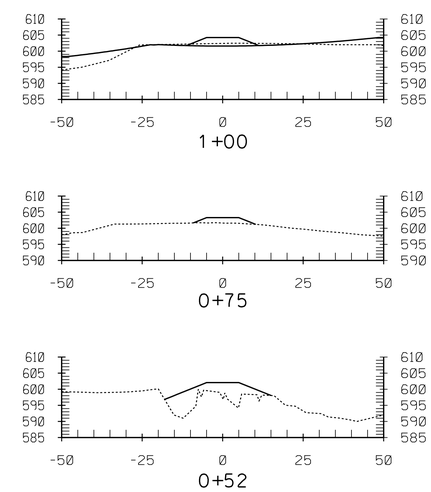

CROSS SECTION ALONG 5N-E PARKWAY RAMP
1 VERTICAL TO 1 HORIZONTAL

COORDINATES

ALIGNMENT	POINT	LABEL	STATION	N	E
5N-E-INDIANAPOLIS RAMP	PI	A61	0+15.57	1482261.4	392623.3
5N-E-INDIANAPOLIS RAMP	PI	A62	1+07.03	1482157.1	392645.4
5N-E-INDIANAPOLIS RAMP	PI	A63	1+31.60	1482132.6	392650.6

US Army Corps of Engineers
Chicago District

SYMBOL	AMENDMENT DESCRIPTION	DATE APPROVED	SYMBOL	DESCRIPTION	DATE APPROVED

DESIGNED BY: JAG
DATE: AUG 2007
DRAWN BY: DB
SCALE: AS SHOWN
CHECKED BY: WK
SOLICITATION NUMBER: W912P6-07-B-0006
JOHN GROBOSKI
SUBMITTED BY:
DATE:

U.S. ARMY ENGINEER DISTRICT
CORPS OF ENGINEERS
CHICAGO, ILLINOIS

LITTLE CALUMET RIVER, INDIANA
LOCAL FLOOD PROTECTION
STAGE V, PHASE 2 - LEVEE

ACCESS RAMP PROFILE 5N & 5S

SHEET REFERENCE NUMBER:
C-57
SHEET 61 OF 138

PLOT DATE: $DATE$
FILENAME: $FILENAME$

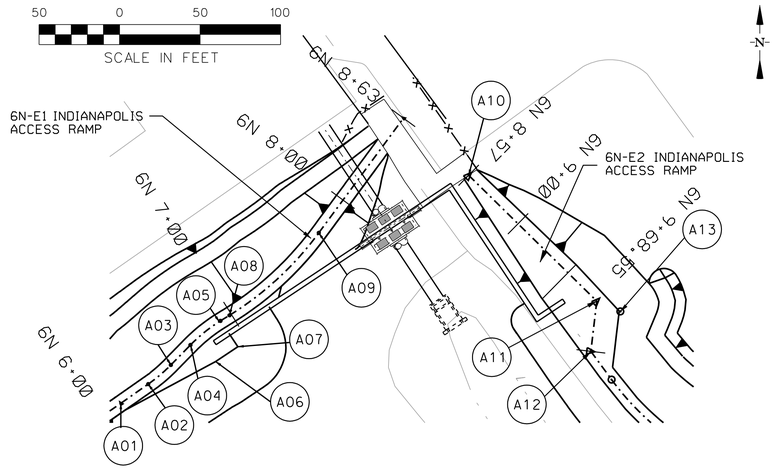

ALIGNMENT	POINT	LABEL	STATION	NORTHING	EASTING
6N-E1 INDIANAPOLIS ACCESS RAMP	PI	A01	6+11.56	1482584.16	393328.30
6N-E1 INDIANAPOLIS ACCESS RAMP	PI	A02	6+32.33	1482596.07	393345.31
6N-E1 INDIANAPOLIS ACCESS RAMP	PI	A03	6+50.77	1482607.98	393359.36
6N-E1 INDIANAPOLIS ACCESS RAMP	PI	A04	6+68.16	1482620.39	393371.51
6N-E1 INDIANAPOLIS ACCESS RAMP	PI	A05	6+92.13	1482635.35	393390.19
6N-E1 INDIANAPOLIS ACCESS RAMP	PI	A06	6+76.38	1482610.12	393387.20
6N-E1 INDIANAPOLIS ACCESS RAMP	PI	A07	6+92.13	1482619.28	393401.01
6N-E1 INDIANAPOLIS ACCESS RAMP	PI	A08	6+98.75	1482638.84	393395.82
6N-E1 INDIANAPOLIS ACCESS RAMP	PI	A09	7+74.68	1482690.02	393451.26
6N-E2 INDIANAPOLIS ACCESS RAMP	PI	A10	8+57.00	1482725.79	393544.36
6N-E2 INDIANAPOLIS ACCESS RAMP	PI	A11	9+68.55	1482647.66	393623.93
6N-E2 INDIANAPOLIS ACCESS RAMP	PI	A12	10+00.0	1482616.43	393620.25
6N-E2 INDIANAPOLIS ACCESS RAMP	PI	A13	9+77.45	1482641.46	393637.88

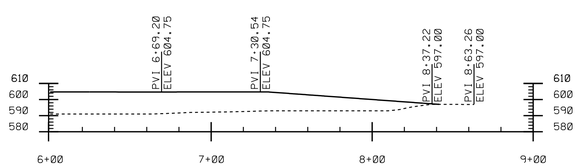

PROFILE 6N-E1-INDIANAPOLIS BLVD RAMP
1 VERTICAL TO 1 HORIZONTAL

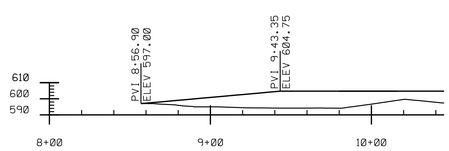

PROFILE 6N-E2-INDIANAPOLIS BLVD RAMP
1 VERTICAL TO 1 HORIZONTAL

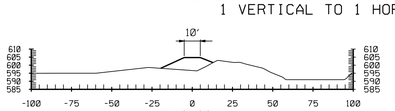

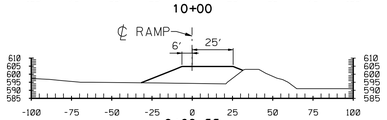

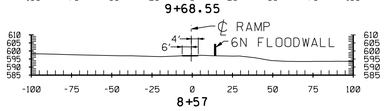

CROSS SECTION ALONG 6N-E2-INDIANAPOLIS BLVD RAMP
1 VERTICAL TO 1 HORIZONTAL

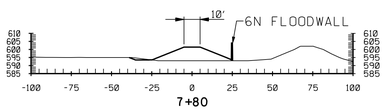

CROSS SECTION ALONG 6N-E1-INDIANAPOLIS BLVD RAMP
1 VERTICAL TO 1 HORIZONTAL

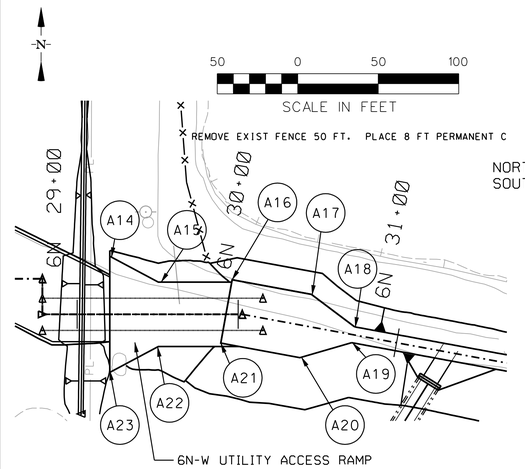

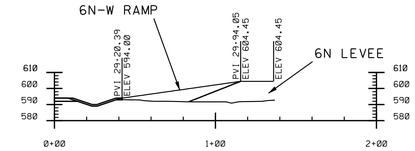

PROFILE ALONG 6N-W UTILITY RAMP
NORTH RAMP IS OFFSET 10 FT TO THE NORTH OF ALIGNMENT 6N
SOUTH RAMP IS OFFSET 10 FT TO THE SOUTH OF ALIGNMENT 6N
1 VERTICAL TO 1 HORIZONTAL

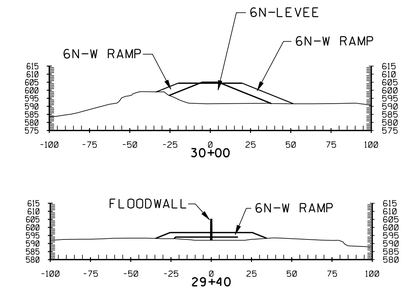

CROSS SECTION ALONG 6N-W UTILITY RAMP
1 VERTICAL TO 1 HORIZONTAL

ALIGNMENT	POINT	LABEL	STATION	NORTHING	EASTING
6N-W UTILITY RAMP (N)	PI	A14	29+20.31	1482643.77	395280.98
6N-W UTILITY RAMP (N)	PI	A15	29+50.52	1482627.77	395311.98
6N-W UTILITY RAMP (N)	PI	A16	29+95.64	1482629.26	395356.86
6N-W UTILITY RAMP (N)	PI	A17	30+42.58	1482620.21	395406.04
6N-W UTILITY RAMP (N)	PI	A18	30+72.58	1482600.01	395432.87
6N-W UTILITY RAMP (S)	PI	A19	30+72.58	1482590.17	395431.09
6N-W UTILITY RAMP (S)	PI	A20	30+42.58	1482580.84	395398.92
6N-W UTILITY RAMP (S)	PI	A21	29+89.46	1482589.90	395349.75
6N-W UTILITY RAMP (S)	PI	A22	29+50.52	1482587.77	395311.98
6N-W UTILITY RAMP (S)	PI	A23	29+20.31	1482571.77	395280.98

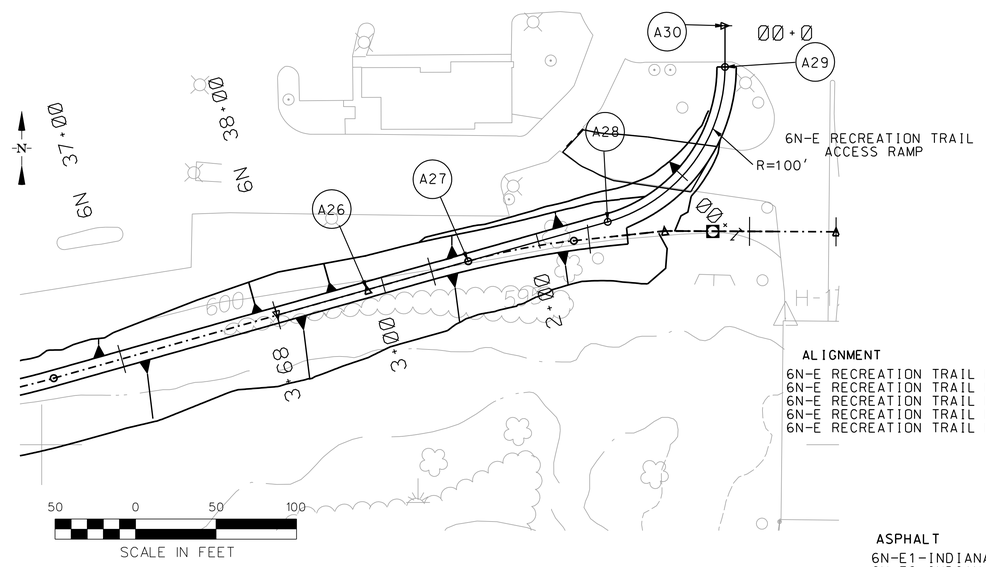

ALIGNMENT	POINT	LABEL	STATION	NORTHING	EASTING
6N-E RECREATION TRAIL RAMP	PI	A26	3+10.36	1482596.30	396202.22
6N-E RECREATION TRAIL RAMP	PI	A27	2+45.20	1482614.00	396264.92
6N-E RECREATION TRAIL RAMP	PI	A28	1+55.17	1482638.45	396351.56
6N-E RECREATION TRAIL RAMP	PI	A29	0+25.60	1482734.69	396424.40
6N-E RECREATION TRAIL RAMP	PI	A30	0+00.00	1482760.29	396424.40

ASPHALT	BEGIN	END
6N-E1-INDIANAPOLIS BLVD	6N 6+74.55	6N 8+43.56
6N-E2-INDIANAPOLIS BLVD	6N 9+00	6N 10+49.46
6N-E RECREATION TRAIL ACCESS RAMP		

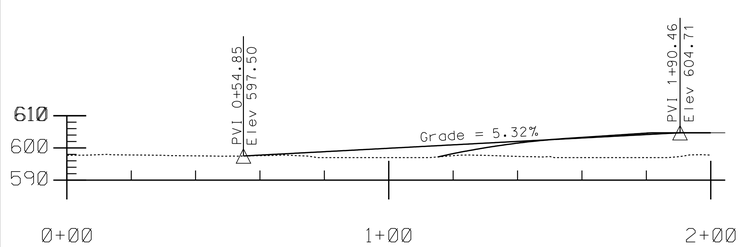

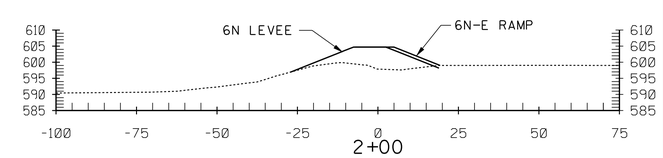

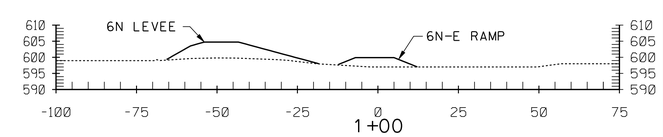

US Army Corps of Engineers
Chicago District

SYMBOL	AMENDMENT DESCRIPTION	DATE APPROVED	SYMBOL	DESCRIPTION	DATE APPROVED

DESIGNED BY: JAG
DATE: AUG 2007
DRAWN BY: DB
SCALE: AS SHOWN
CHECKED BY: WK
SOLICITATION NUMBER: W912P6-07-B-0006
SUBMITTED BY: JOHN GROBOSKI
DATE:

U.S. ARMY ENGINEER DISTRICT
CORPS OF ENGINEERS
CHICAGO, ILLINOIS

LITTLE CALUMET RIVER, INDIANA
LOCAL FLOOD PROTECTION
STAGE V, PHASE 2 - LEVEE

ACCESS RAMP PROFILE 6N

SHEET REFERENCE NUMBER:
C-58
SHEET 62 OF 138

PLOT DATE: 8/3/2007
FILENAME: D:\working\dms10534\LCS5C58.dgn

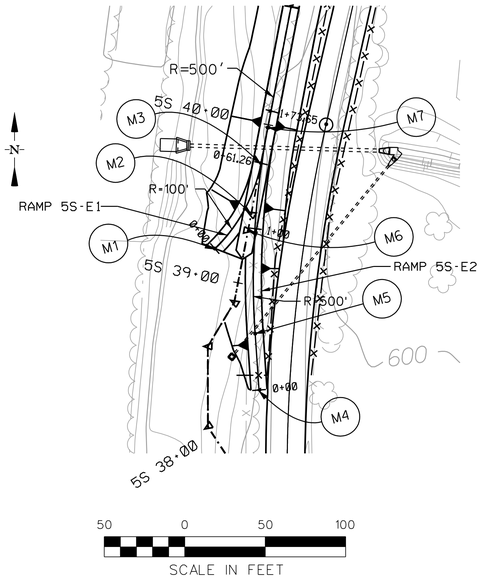

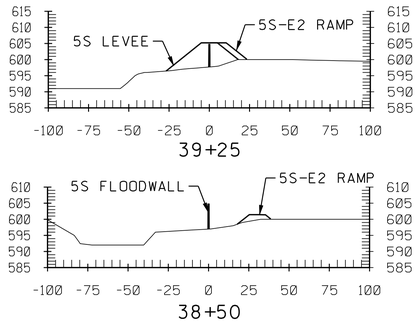

ALIGNMENT	POINT	LABEL	STATION	NORTHING	EASTING
5S-E1 RAMP	CV #1 PC	M1	0+00	1479501.60	391213.44
5S-E1 RAMP	CV #1 PI	M2	0+13.12	1479523.57	391236.20
5S-E1 RAMP	CV #1 PT	M3	0+61.26	1479554.65	391242.16
5S-E2 RAMP	PI	M4	0+00	1479413.73	391240.91
5S-E2 RAMP	CV #2 PC	M5	0+35.09	1479448.74	391238.55
5S-E2 RAMP	CV #2 PI	M6	0+98.20	1479513.26	391234.17
5S-E2 RAMP	CV #2 PT	M7	1+73.65	1479576.74	391246.40

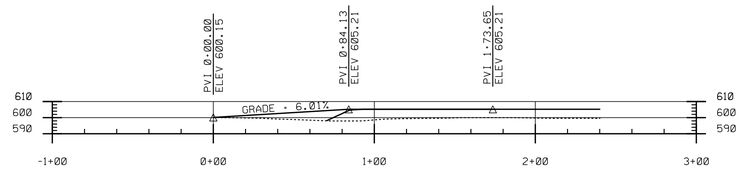

PROFILE ALONG 5S-E2 MAINTANCE RAMP
1 VERTICAL TO 1 HORIZONTAL

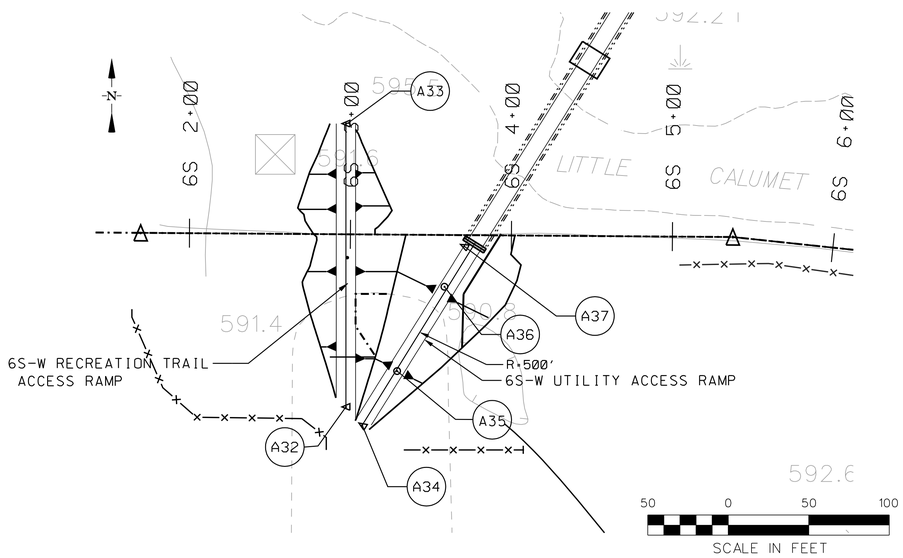

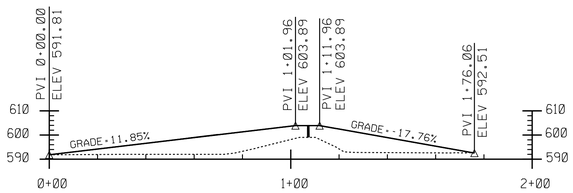

PROFILE ALONG 6S-W RECREATION TRAIL RAMP
1 VERTICAL TO 1 HORIZONTAL

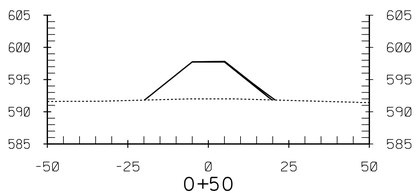

CROSS SECTION 6S-W RECREATION TRAIL RAMP
1 VERTICAL TO 1 HORIZONTAL

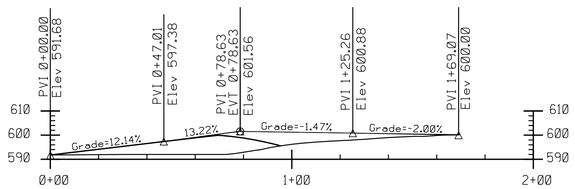

PROFILE ALONG 6S-W UTILITY RAMP
1 VERTICAL TO 1 HORIZONTAL

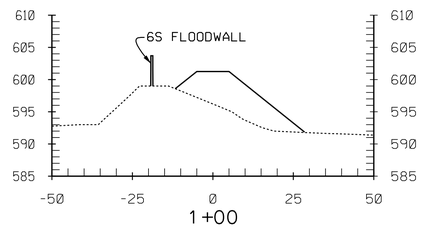

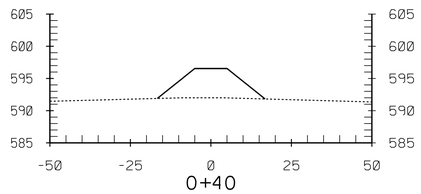

CROSS SECTIONS ALONG 6S-W UTILITY RAMP
1 VERTICAL TO 1 HORIZONTAL

ALIGNMENT	POINT	LABEL	STATION	Northing	Easting
6S-W RECREATION TRAIL RAMP	PI	A32	4+71	1482722.38	396375.82
6S-W RECREATION TRAIL RAMP	PI	A33	2+00	1482451.45	396375.44
6S-W UTILITY RAMP	PI	A34	0+47.01	1482282.93	395257.22
6S-W UTILITY RAMP	PC	A35	0+87.01	1482258.23	395288.15
6S-W UTILITY RAMP	PT	A36	1+21.19	1482332.73	395302.80
6S-W UTILITY RAMP	PI	A37	1+69.79	1482337.02	395351.22

ASPHALT	BEGIN	END
6S-W RECREATION TRAIL ACCESS RAMP	2+00	4+79.42
6S-W UTILITY ACCESS RAMP	0+47.01	1+72.66

US Army Corps of Engineers
Chicago District

SYMBOL	AMENDMENT DESCRIPTION	DATE APPROVED	SYMBOL	DESCRIPTION	DATE APPROVED

DESIGNED BY: JAG
DATE: AUG 2007
DRAWN BY: DB
SCALE: AS SHOWN
CHECKED BY: WK
SOLICITATION NUMBER: W912P6-07-B-0006
SUBMITTED BY: JOHN GROBOSKI
DATE:

U.S. ARMY ENGINEER DISTRICT
CORPS OF ENGINEERS
CHICAGO, ILLINOIS

LITTLE CALUMET RIVER, INDIANA
LOCAL FLOOD PROTECTION
STAGE V, PHASE 2 - LEVEE

ACCESS RAMP PROFILE 6S AND 5S

SHEET REFERENCE NUMBER:
C-59
SHEET 63 OF 138

PLOT DATE: 8/6/2007
FILENAME: D:\working\dms10534\LCS5C59.dgn

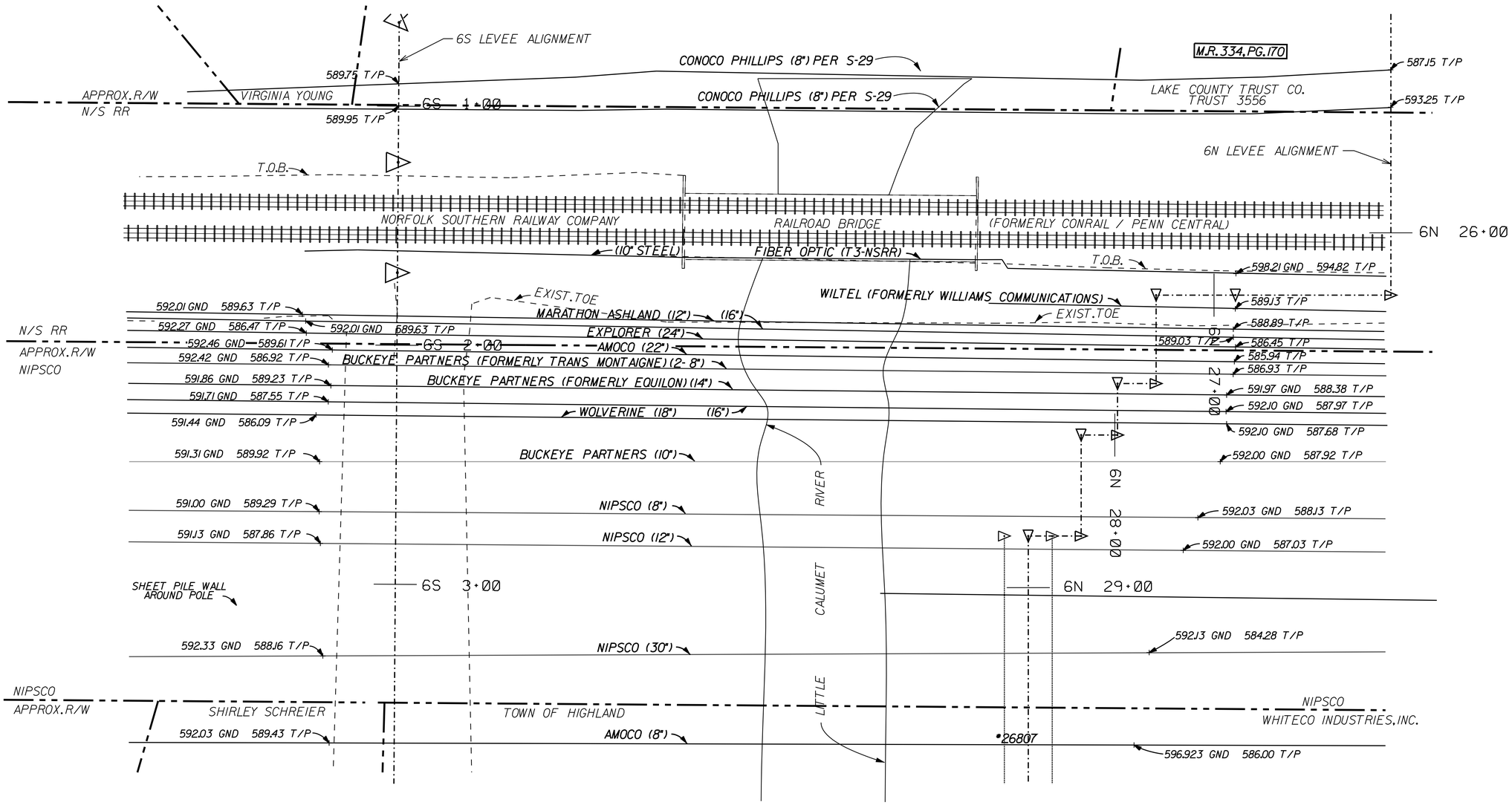

NOTES:

1. PIPLINE OWNERS AND ELEVATIONS PROVIED BY:
   GARCIA CONSULTING
   7501 INDIANAPOLIS BOULEVARD
   HAMMOND, IN 46324

   PHONE: 219-989-1954

2. WILLIAMS COMMUNICATION LINE NOT FOUND ON SOUTH SIDE.

OVERALL PIPELINE CORRIDOR

LEGEND

×589.43 T/P — TOP OF PIPE ELEVATION

×589.43 GND — GROUND ELEVATION

0 10 20 30 40
SCALE IN FEET

US Army Corps of Engineers
Chicago District

SYMBOL	AMENDMENT DESCRIPTION	DATE APPROVED	SYMBOL	DESCRIPTION	DATE APPROVED

DESIGNED BY: JAG
DATE: AUG 2007
DRAWN BY: DB
SCALE: AS SHOWN
CHECKED BY: WK
SOLICITATION NUMBER: W912P6-07-B-0006
SUBMITTED BY: JOHN GROBOSKI
DATE:

U.S. ARMY ENGINEER DISTRICT
CORPS OF ENGINEERS
CHICAGO, ILLINOIS

LITTLE CALUMET RIVER, INDIANA
LOCAL FLOOD PROTECTION
STAGE V, PHASE 2 - LEVEE

PLAN UTILITY CORRIDOR

SHEET REFERENCE NUMBER:
C-60
SHEET 64 OF 138

PLOT DATE: 8/13/2007
FILENAME: D:\working\dms10534\LCS5560.DGN

NOTES:

1. THIS PROJECT WILL ONLY INCLUDE THE CONSTRUCTION OF RECREATIONAL TRAIL ALONG LEVEE 5N, SMALL PORTION OF 5S, AND 6N.

2. SHEETS R-00 TO R-09 DEPICT THE LAYOUT FOR THE RECREATIONAL TRAIL FOR THIS PROJECT. THE SHEETS WILL BE USED TO SHOW THE LOCATION OF ALL VEHICLE BARIERS, SIGNS, AND ANY MISC. LANDSCAPING DETAILS.

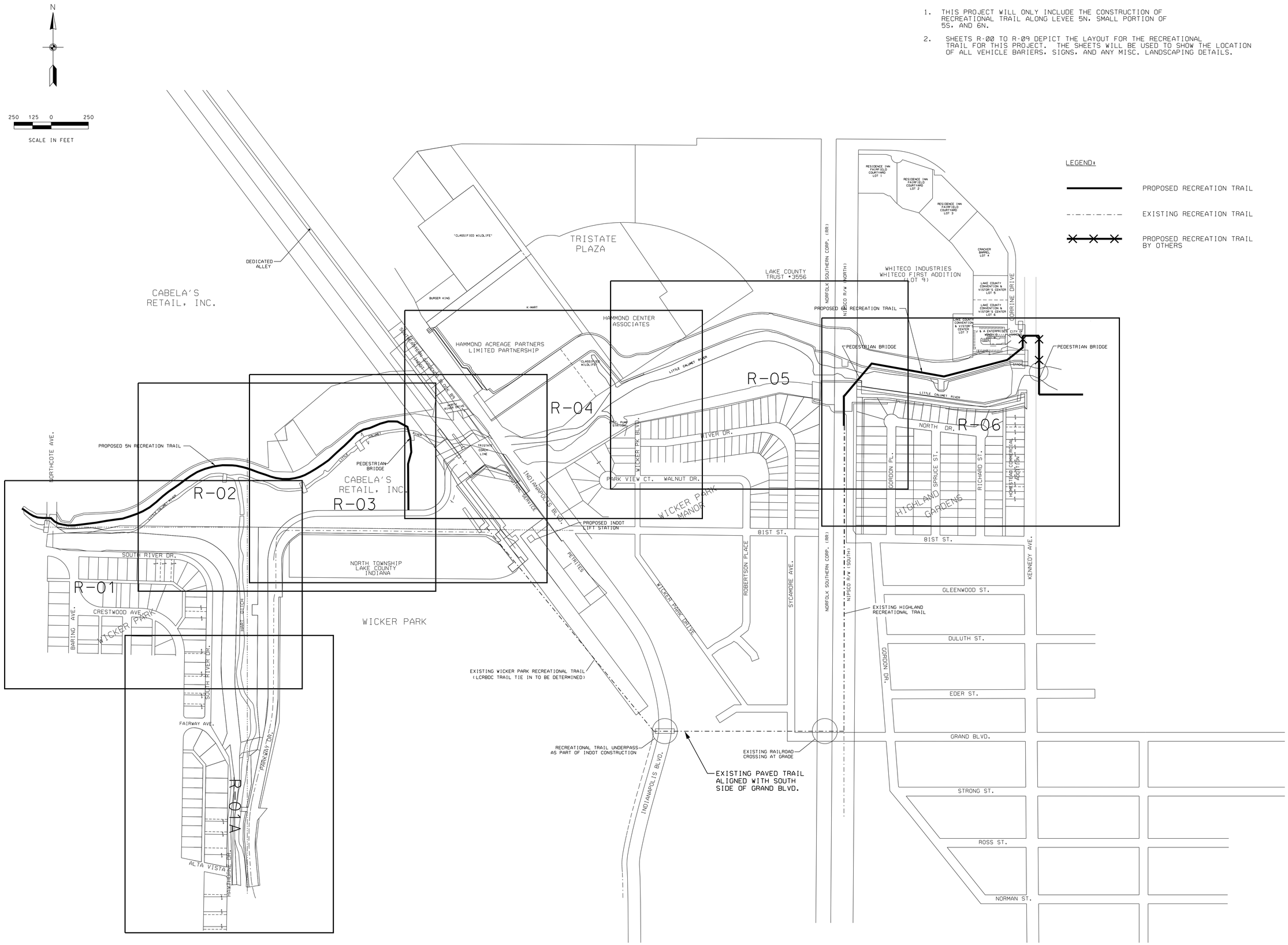

US Army Corps of Engineers
Chicago District

SYMBOL	AMENDMENT DESCRIPTION	DATE APPROVED	SYMBOL	DESCRIPTION	DATE APPROVED

DESIGNED BY: JAG
DATE: AUG 2007
DRAWN BY: DB
SCALE: AS SHOWN
CHECKED BY: WK
SOLICITATION NUMBER: W912P6-07-B-0006
SUBMITTED BY: JOHN GROBOSKI
DATE:

U.S. ARMY ENGINEER DISTRICT
CORPS OF ENGINEERS
CHICAGO, ILLINOIS

LITTLE CALUMET RIVER, INDIANA
LOCAL FLOOD PROTECTION
STAGE V, PHASE 2 - LEVEE
RECREATIONAL TRAIL ALIGNMENT
KENNEDY TO NORTHCOTE
SHEET INDEX

SHEET REFERENCE NUMBER:
R-00

PLOT DATE: $DATE$
FILENAME: $FILENAME$

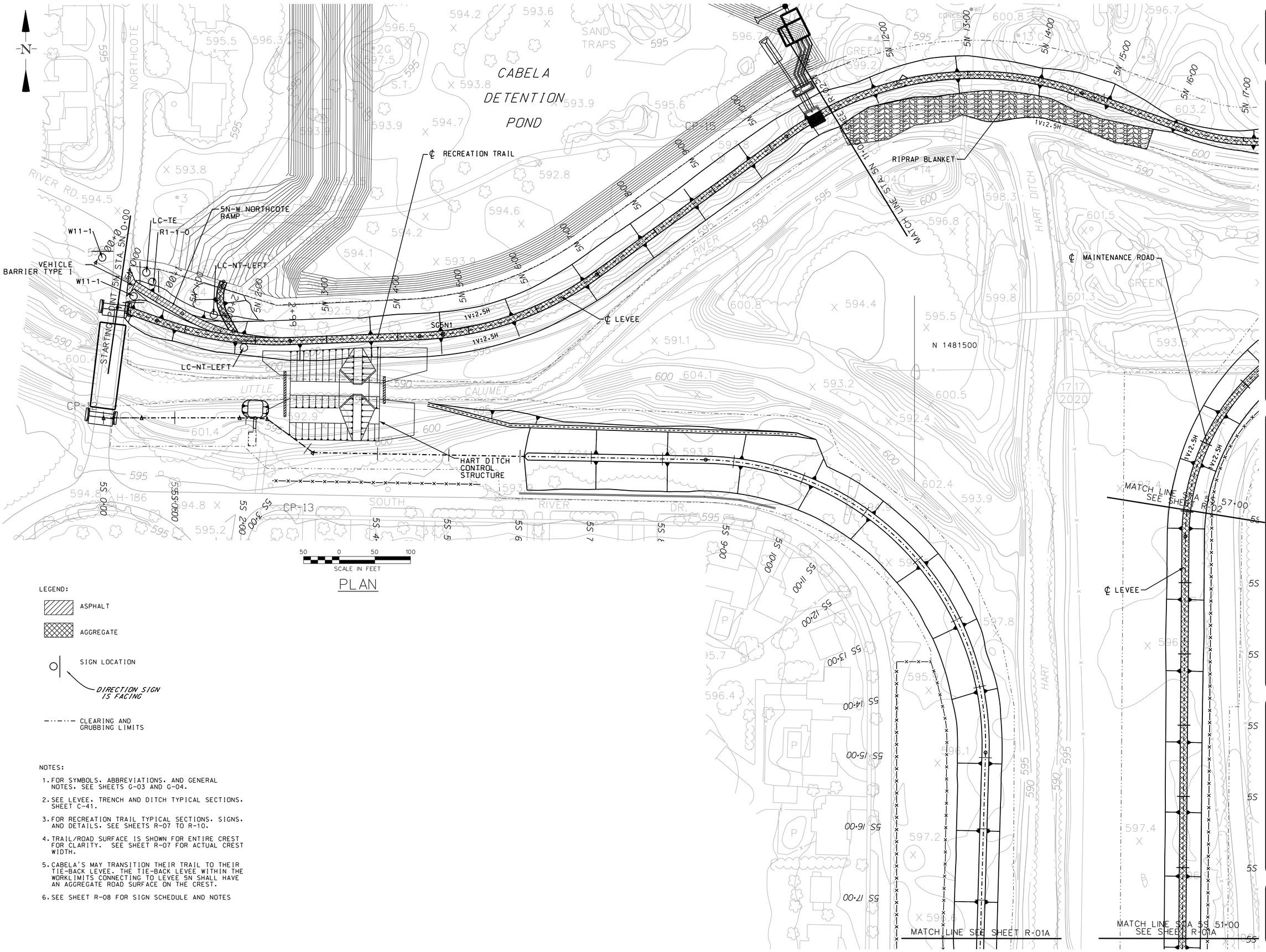

PLAN

LEGEND:

- ASPHALT
- AGGREGATE
- SIGN LOCATION — DIRECTION SIGN IS FACING
- CLEARING AND GRUBBING LIMITS

NOTES:

1. FOR SYMBOLS, ABBREVIATIONS, AND GENERAL NOTES, SEE SHEETS G-03 AND G-04.
2. SEE LEVEE, TRENCH AND DITCH TYPICAL SECTIONS, SHEET C-41.
3. FOR RECREATION TRAIL TYPICAL SECTIONS, SIGNS, AND DETAILS, SEE SHEETS R-07 TO R-10.
4. TRAIL/ROAD SURFACE IS SHOWN FOR ENTIRE CREST FOR CLARITY. SEE SHEET R-07 FOR ACTUAL CREST WIDTH.
5. CABELA'S MAY TRANSITION THEIR TRAIL TO THEIR TIE-BACK LEVEE. THE TIE-BACK LEVEE WITHIN THE WORKLIMITS CONNECTING TO LEVEE 5N SHALL HAVE AN AGGREGATE ROAD SURFACE ON THE CREST.
6. SEE SHEET R-08 FOR SIGN SCHEDULE AND NOTES

US Army Corps of Engineers
Chicago District

SYMBOL	AMENDMENT DESCRIPTION	DATE APPROVED	SYMBOL	DESCRIPTION	DATE APPROVED

DESIGNED BY: JAG
DRAWN BY: DB
CHECKED BY: WK
SUBMITTED BY: JOHN GROBOSKI
DATE: AUG 2007
SCALE: AS SHOWN
SOLICITATION NUMBER: W912P6-07-B-0006
DATE:

U.S. ARMY ENGINEER DISTRICT
CORPS OF ENGINEERS
CHICAGO, ILLINOIS

LITTLE CALUMET RIVER, INDIANA
LOCAL FLOOD PROTECTION
STAGE V, PHASE 2 - LEVEE

RECREATION AND MAINTENANCE ACCESS PLAN
STA. 5N 0+00 TO 5N 11+00

SHEET REFERENCE NUMBER:
R-01
SHEET 66 OF 138

PLOT DATE: 8/7/2007
FILENAME: C:\working\sms10534\CS5R01.DGN

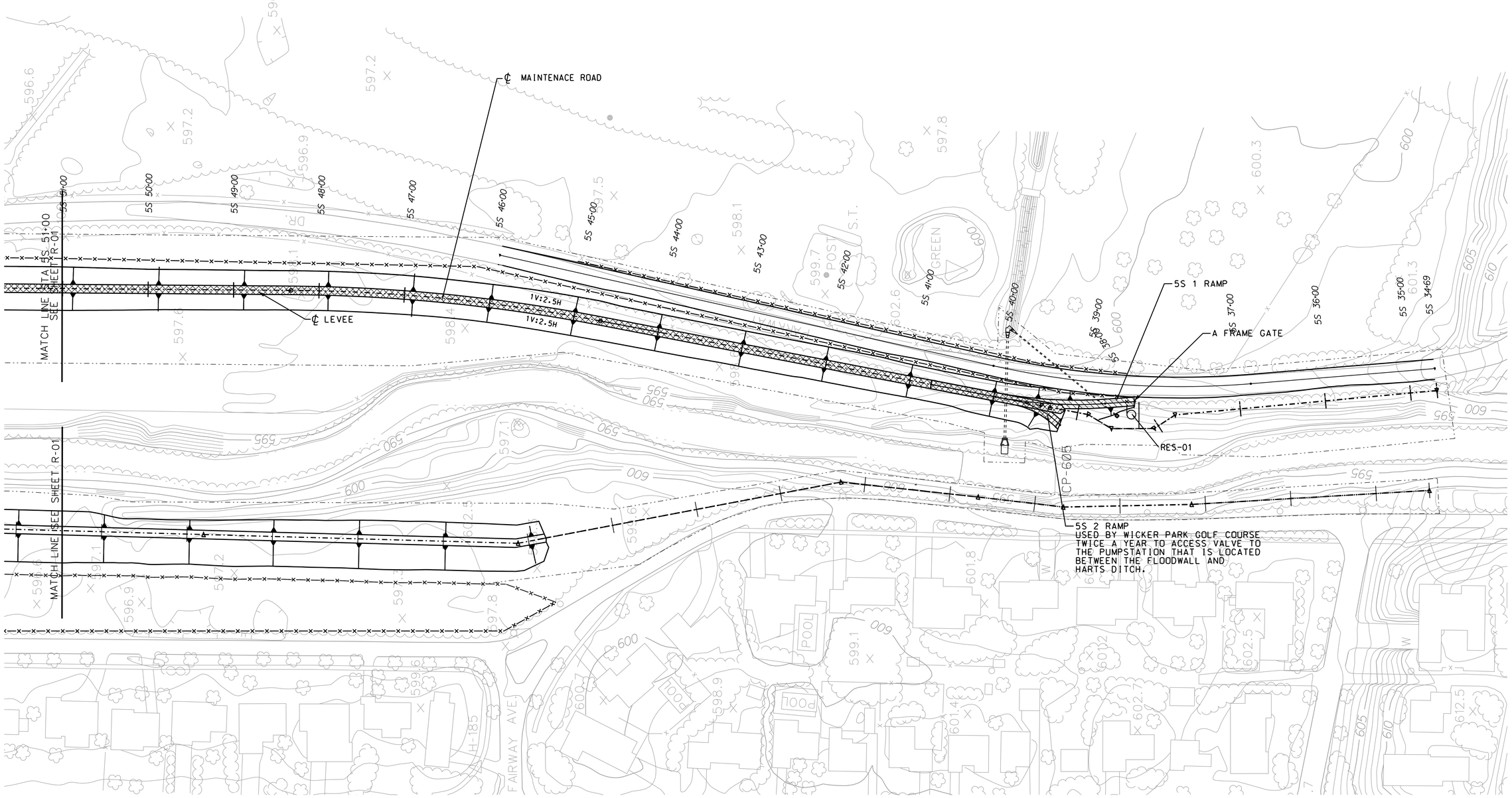

50 0 50 100
SCALE IN FEET

PLAN

LEGEND:

ASPHALT

AGGREGATE

CLEARING AND GRUBBING LIMITS

NOTES:

1. FOR SYMBOLS, ABBREVIATIONS, AND GENERAL NOTES, SEE SHEETS G-03 AND G-04.
2. SEE LEVEE, TRENCH AND DITCH TYPICAL SECTIONS, SHEET C-41.
3. FOR RECREATION TRAIL TYPICAL SECTIONS, SIGNS, AND DETAILS, SEE SHEETS R-07 TO R-10.
4. TRAIL/ROAD SURFACE IS SHOWN FOR ENTIRE CREST FOR CLARITY. SEE SHEET R-07 FOR ACTUAL CREST WIDTH.
5. SEE SHEET R-08 FOR SIGN SCHEDULE AND NOTES

US Army Corps of Engineers
Chicago District

SYMBOL	AMENDMENT DESCRIPTION	DATE APPROVED	SYMBOL	DESCRIPTION	DATE APPROVED

DESIGNED BY: JAG
DATE: AUG 2007
DRAWN BY: DB
SCALE: AS SHOWN
CHECKED BY: WK
SOLICITATION NUMBER: W912P6-07-B-0006
SUBMITTED BY: JOHN GROBOSKI
DATE:

U.S. ARMY ENGINEER DISTRICT
CORPS OF ENGINEERS
CHICAGO, ILLINOIS

LITTLE CALUMET RIVER, INDIANA
LOCAL FLOOD PROTECTION
STAGE V, PHASE 2 - LEVEE

RECREATION AND MAINTENANCE ACCESS PLAN
STA. 5S 51+00 TO 5S 34+69

SHEET REFERENCE NUMBER:
R-01A

SHEET 67 OF 138

PLOT DATE: 8/6/2007
FILENAME: C:\working\sms10534\CS5R01a.DGN

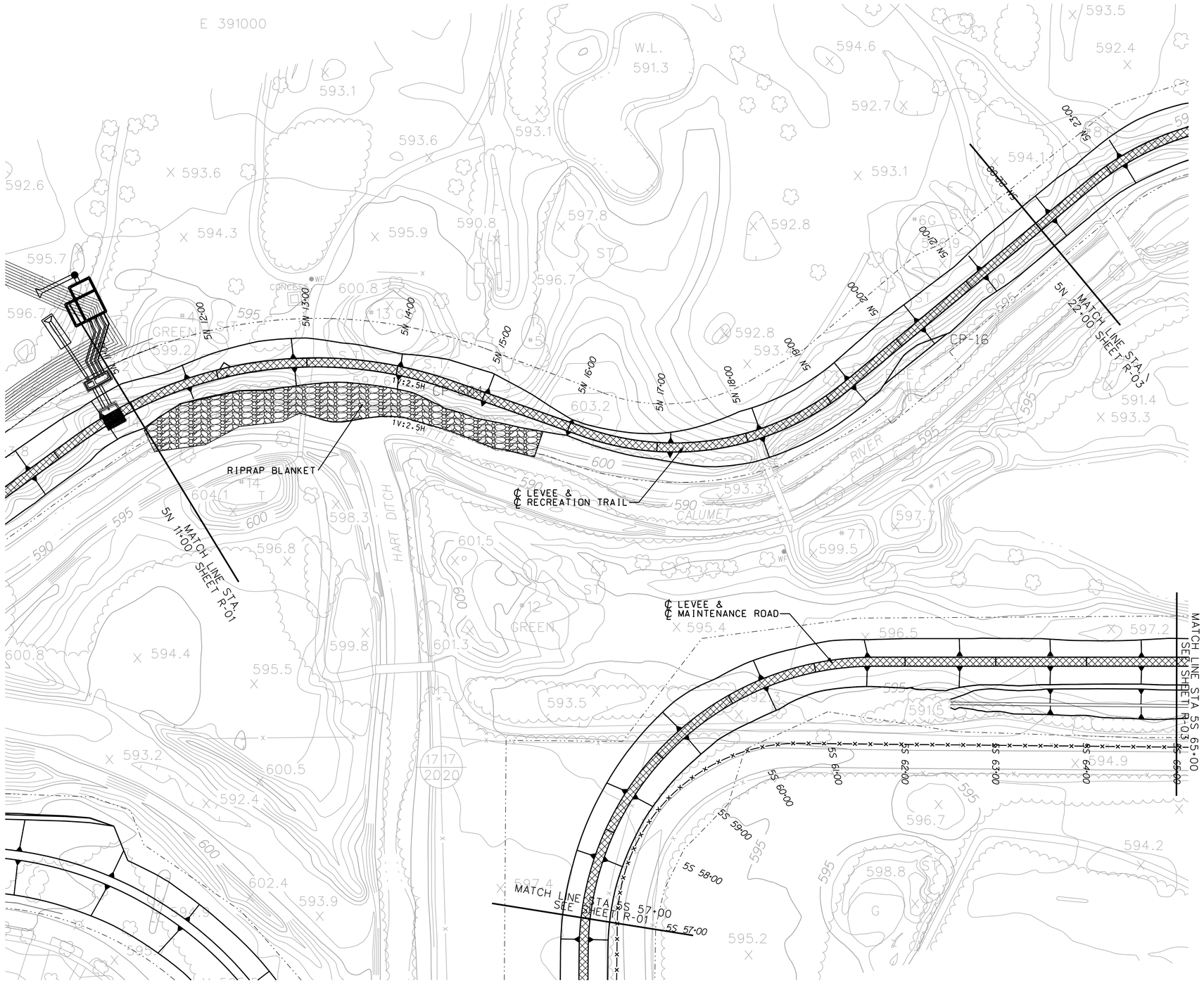

PLAN

50 0 50 100
SCALE IN FEET

LEGEND:

- ASPHALT
- AGGREGATE
- CLEARING AND GRUBBING LIMITS

NOTES:

1. FOR SYMBOLS, ABBREVIATIONS, AND GENERAL NOTES, SEE SHEETS G-03 AND G-04.
2. SEE LEVEE, TRENCH AND DITCH TYPICAL SECTIONS, SHEET C-41.
3. FOR RECREATION TRAIL TYPICAL SECTIONS, SIGNS, AND DETAILS, SEE SHEETS R-07 TO R-10.
4. TRAIL/ROAD SURFACE IS SHOWN FOR ENTIRE CREST FOR CLARITY. SEE SHEET R-07 FOR ACTUAL CREST WIDTH.

US Army Corps of Engineers
Chicago District

SYMBOL	AMENDMENT DESCRIPTION	DATE APPROVED	SYMBOL	DESCRIPTION	DATE APPROVED

DESIGNED BY: JAG
DATE: AUG 2007
DRAWN BY: DB
SCALE: AS SHOWN
CHECKED BY: WK
SOLICITATION NUMBER: W912P6-07-B-0006
SUBMITTED BY: JOHN GROBOSKI
DATE:

U.S. ARMY ENGINEER DISTRICT
CORPS OF ENGINEERS
CHICAGO, ILLINOIS

LITTLE CALUMET RIVER, INDIANA
LOCAL FLOOD PROTECTION
STAGE V, PHASE 2 - LEVEE

RECREATION AND MAINTENANCE ACCESS PLAN
STA. 5N 11+00 TO 5N 22+00

SHEET REFERENCE NUMBER:
R-02
SHEET 68 OF 138

PLOT DATE: 8/6/2007
FILENAME: C:\working\oms10534\LCS5R02.DGN

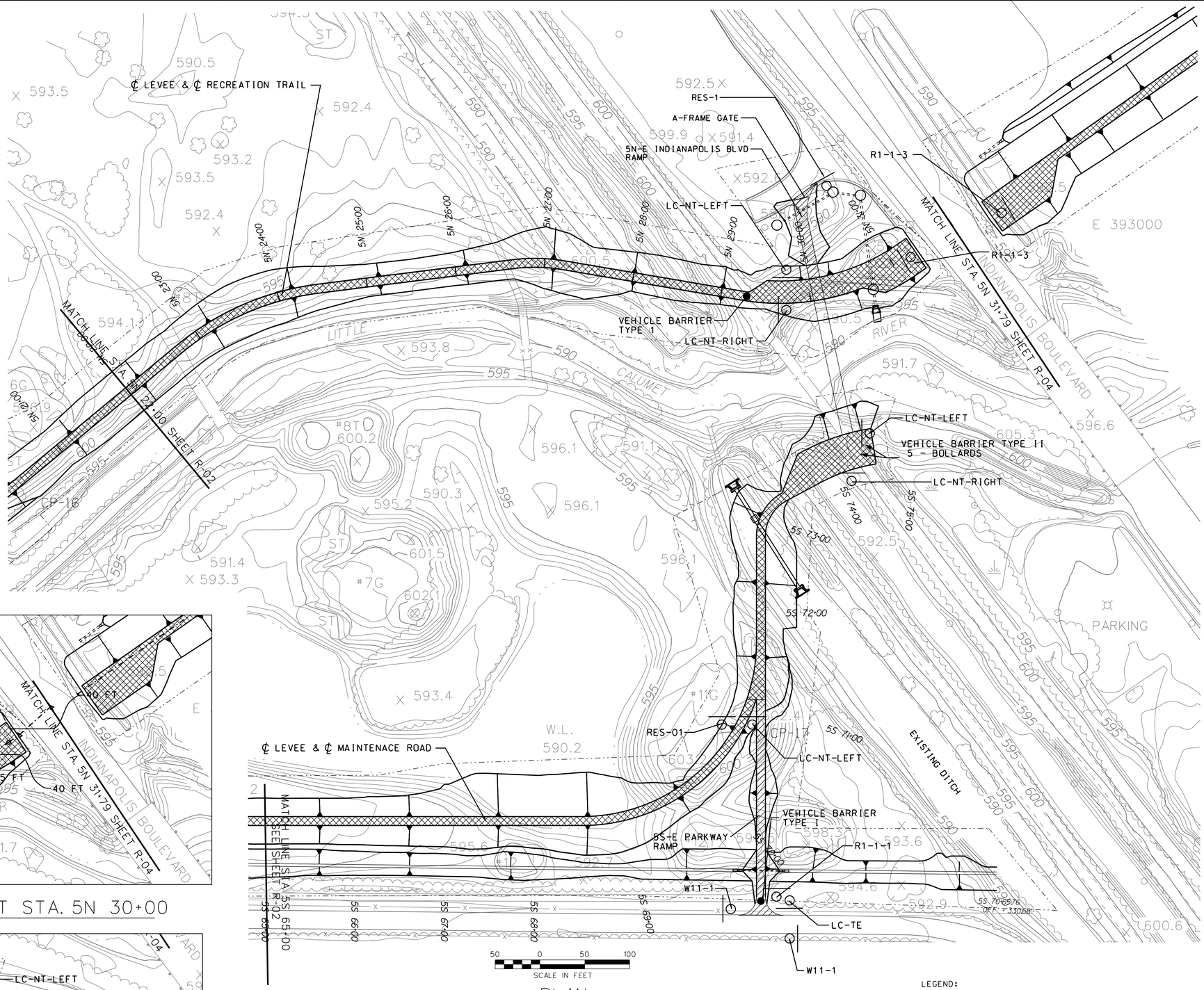

PLAN

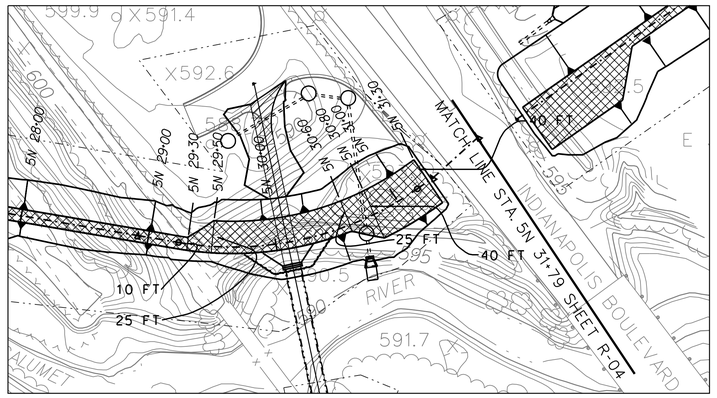

TURNAROUND DETAIL AT STA. 5N 30+00

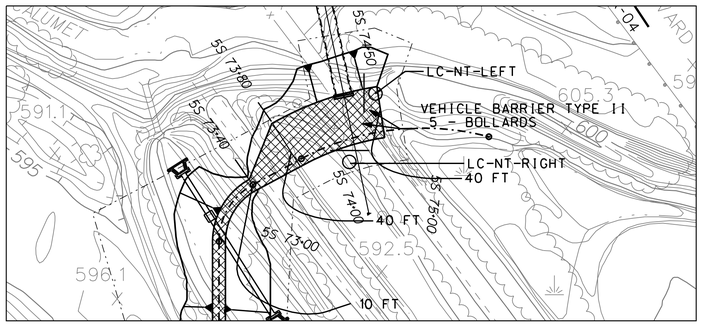

TURNAROUND DETAIL AT STA. 5S 74+00

LEGEND:

- ASPHALT
- AGGREGATE
- CLEARING AND GRUBBING LIMITS

NOTES:

1. FOR SYMBOLS, ABBREVIATIONS, AND GENERAL NOTES, SEE SHEETS G-03 AND G-04.
2. SEE LEVEE, TRENCH AND DITCH TYPICAL SECTIONS, SHEET C-41.
3. FOR RECREATION TRAIL TYPICAL SECTIONS, SIGNS, AND DETAILS, SEE SHEETS R-07 TO R-10.
4. TRAIL/ROAD SURFACE IS SHOWN FOR ENTIRE CREST FOR CLARITY. SEE SHEET R-07 FOR ACTUAL CREST WIDTH.
5. VEHICLE BARRER TYPE II, BOLLARDS TO BE SPACED IN THE FIELD BY COR.
6. SEE SHEET R-08 FOR SIGN SCHEDULE AND NOTES

US Army Corps of Engineers
Chicago District

SYMBOL	AMENDMENT DESCRIPTION	DATE APPROVED	SYMBOL	DESCRIPTION	DATE APPROVED

DESIGNED BY: JAG
DATE: AUG 2007
DRAWN BY: DB
SCALE: AS SHOWN
CHECKED BY: WK
SOLICITATION NUMBER: W912P6-07-B-0006
SUBMITTED BY: JOHN GROBOSKI
DATE:

U.S. ARMY ENGINEER DISTRICT
CORPS OF ENGINEERS
CHICAGO, ILLINOIS

LITTLE CALUMET RIVER, INDIANA
LOCAL FLOOD PROTECTION
STAGE V, PHASE 2 - LEVEE

RECREATION AND MAINTENANCE ACCESS PLAN
STA. 5N 22+00 TO 31+79

SHEET REFERENCE NUMBER:
R-03
SHEET 69 OF 138

PLOT DATE: 8/6/2007
FILENAME: D:\working\dms10534\LCSSR03.DGN

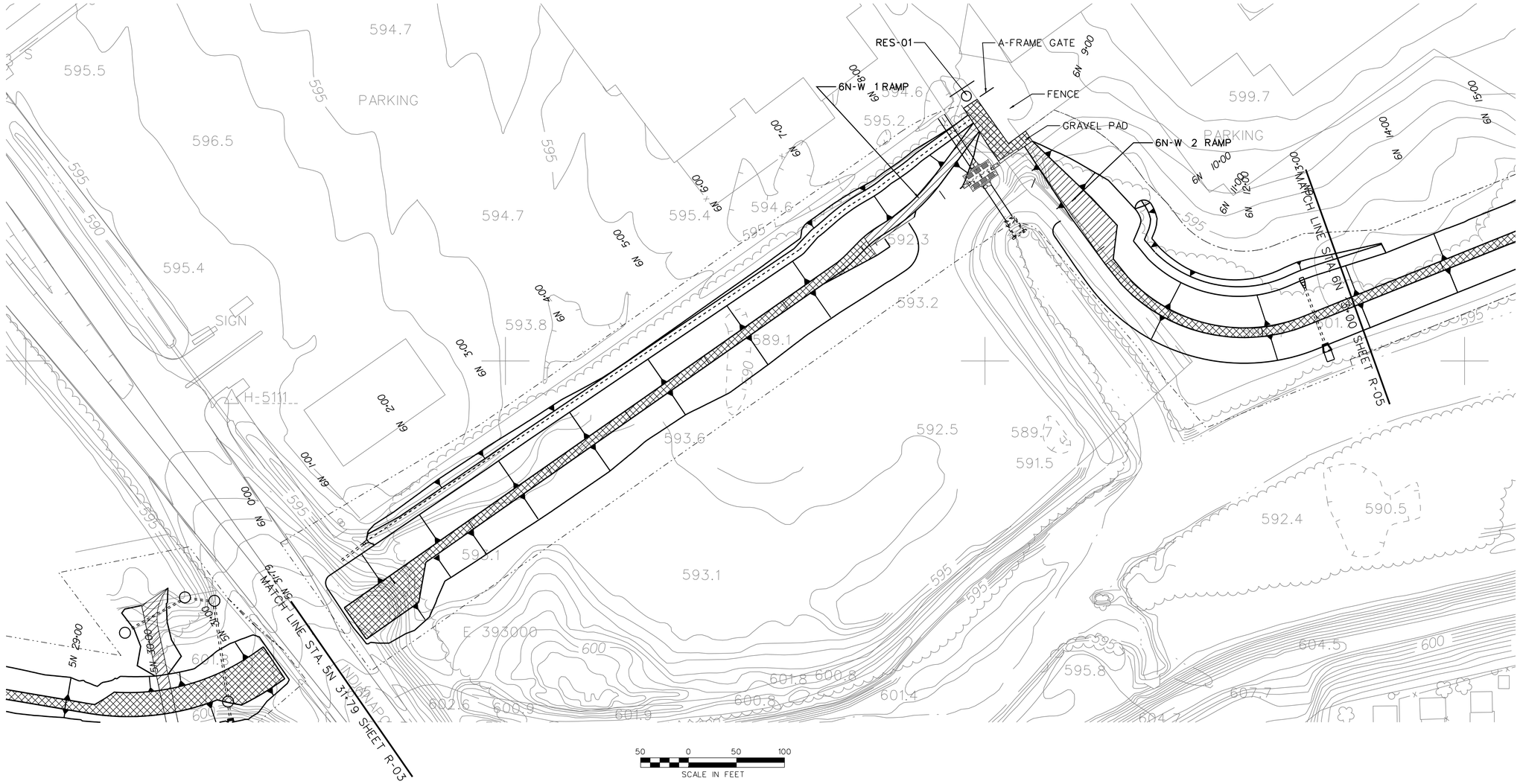

PLAN

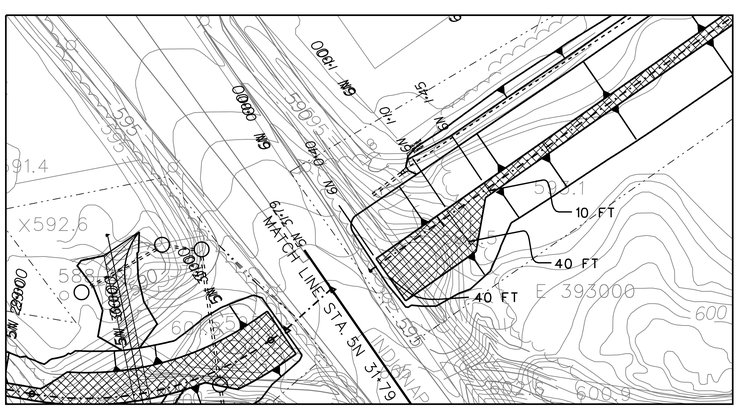

TURNAROUND DETAIL STA. 6N 1+00

LEGEND:

- ASPHALT
- AGGREGATE
- CLEARING AND GRUBBING LIMITS

NOTES:

1. FOR SYMBOLS, ABBREVIATIONS, AND GENERAL NOTES, SEE SHEETS G-03 AND G-04.
2. SEE LEVEE, TRENCH AND DITCH TYPICAL SECTIONS, SHEET C-41.
3. FOR RECREATION TRAIL TYPICAL SECTIONS, SIGNS, AND DETAILS, SEE SHEETS R-07 TO R-10.
4. TRAIL/ROAD SURFACE IS SHOWN FOR ENTIRE CREST FOR CLARITY. SEE SHEET R-07 FOR ACTUAL CREST WIDTH.
5. SEE SHEET R-08 FOR SIGN SCHEDULE AND NOTES

US Army Corps of Engineers
Chicago District

SYMBOL	AMENDMENT DESCRIPTION	DATE APPROVED	SYMBOL	DESCRIPTION	DATE APPROVED

DESIGNED BY: JAG
DATE: AUG 2007
DRAWN BY: DB
SCALE: AS SHOWN
CHECKED BY: WK
SOLICITATION NUMBER: W912P6-07-B-0006
SUBMITTED BY: JOHN GROBOSKI
DATE:

U.S. ARMY ENGINEER DISTRICT
CORPS OF ENGINEERS
CHICAGO, ILLINOIS

LITTLE CALUMET RIVER, INDIANA
LOCAL FLOOD PROTECTION
STAGE V, PHASE 2 - LEVEE

RECREATION AND MAINTENANCE ACCESS PLAN
STA. 5N 31+79 TO 6N 13+00

SHEET REFERENCE NUMBER:
R-04

PLOT DATE: 8/6/2007
FILENAME: D:\working\dms90534\LCS5R04.DGN

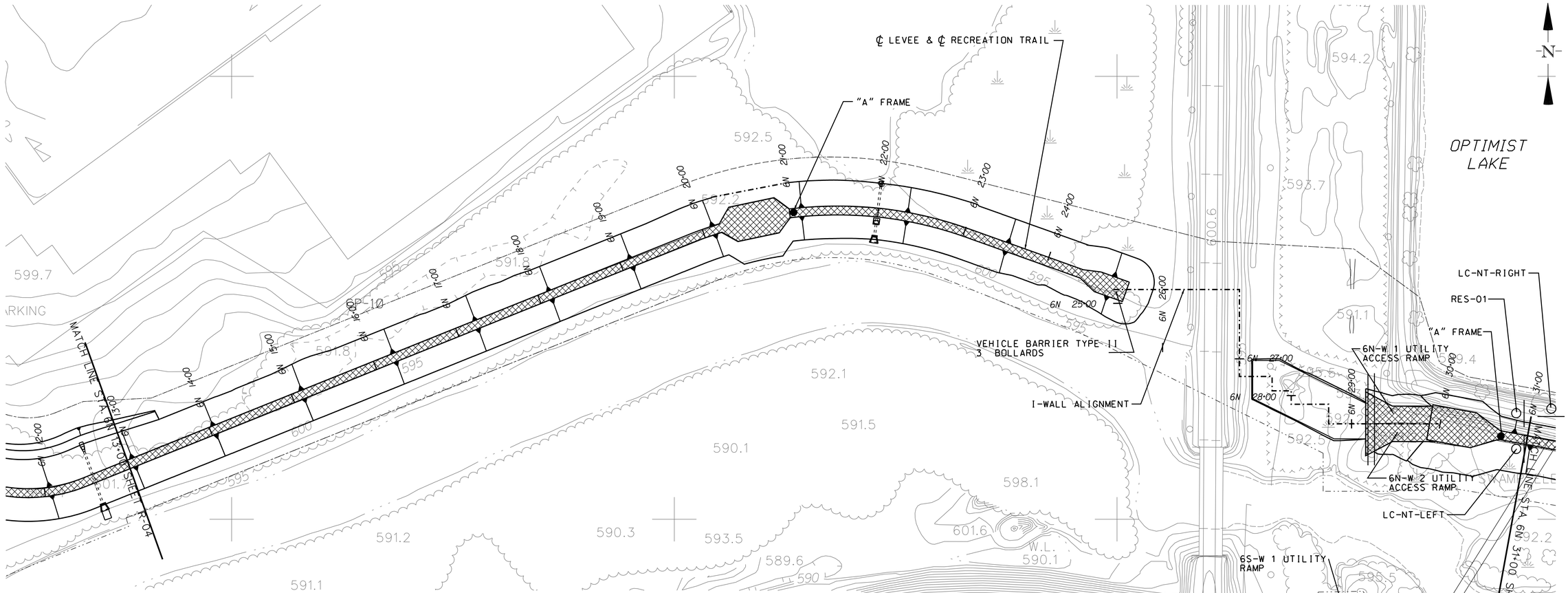

PLAN

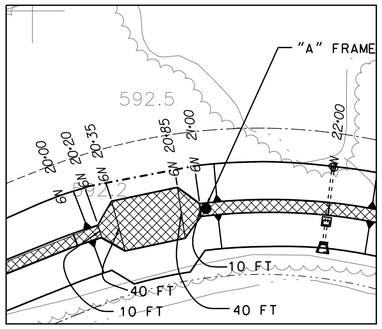

TURNAROUND DETAIL AT STA. 6N 20+20

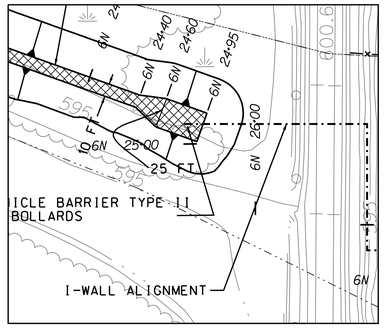

END DETAIL AT STA. 6N 25+00

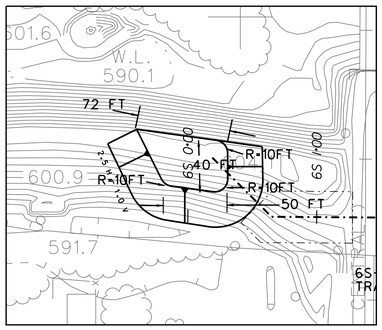

END DETAIL STA. 6S 0+00

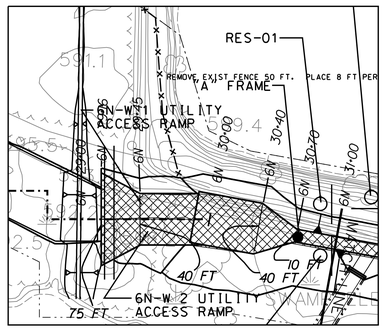

TURNAROUND DETAIL AT STA. 6N 30+00

LEGEND:

- ASPHALT
- AGGREGATE
- CLEARING AND GRUBBING LIMITS

NOTES:

1. FOR SYMBOLS, ABBREVIATIONS, AND GENERAL NOTES, SEE SHEETS G-03 AND G-04.
2. SEE LEVEE, TRENCH AND DITCH TYPICAL SECTIONS, SHEET C-41.
3. FOR RECREATION TRAIL TYPICAL SECTIONS, SIGNS, AND DETAILS, SEE SHEETS R-07 TO R-10.
4. TRAIL/ROAD SURFACE IS SHOWN FOR ENTIRE CREST FOR CLARITY. SEE SHEET R-07 FOR ACTUAL CREST WIDTH.

US Army Corps of Engineers
Chicago District

SYMBOL	AMENDMENT DESCRIPTION	DATE APPROVED	SYMBOL	DESCRIPTION	DATE APPROVED

DESIGNED BY: JAG
DRAWN BY: DB
CHECKED BY: WK
SUBMITTED BY: JOHN GROBOSKI
DATE: AUG 2007
SCALE: AS SHOWN
SOLICITATION NUMBER: W912P6-07-B-0006
DATE:

U.S. ARMY ENGINEER DISTRICT
CORPS OF ENGINEERS
CHICAGO, ILLINOIS

LITTLE CALUMET RIVER, INDIANA
LOCAL FLOOD PROTECTION
STAGE V, PHASE 2 - LEVEE
RECREATION AND MAINTENANCE ACCESS PLAN
STA. 6N 13+00 TO 31+00

SHEET REFERENCE NUMBER:
R-05

PLOT DATE: 8/6/2007
FILENAME: D:\working\dms10534\LCS5R05.DGN

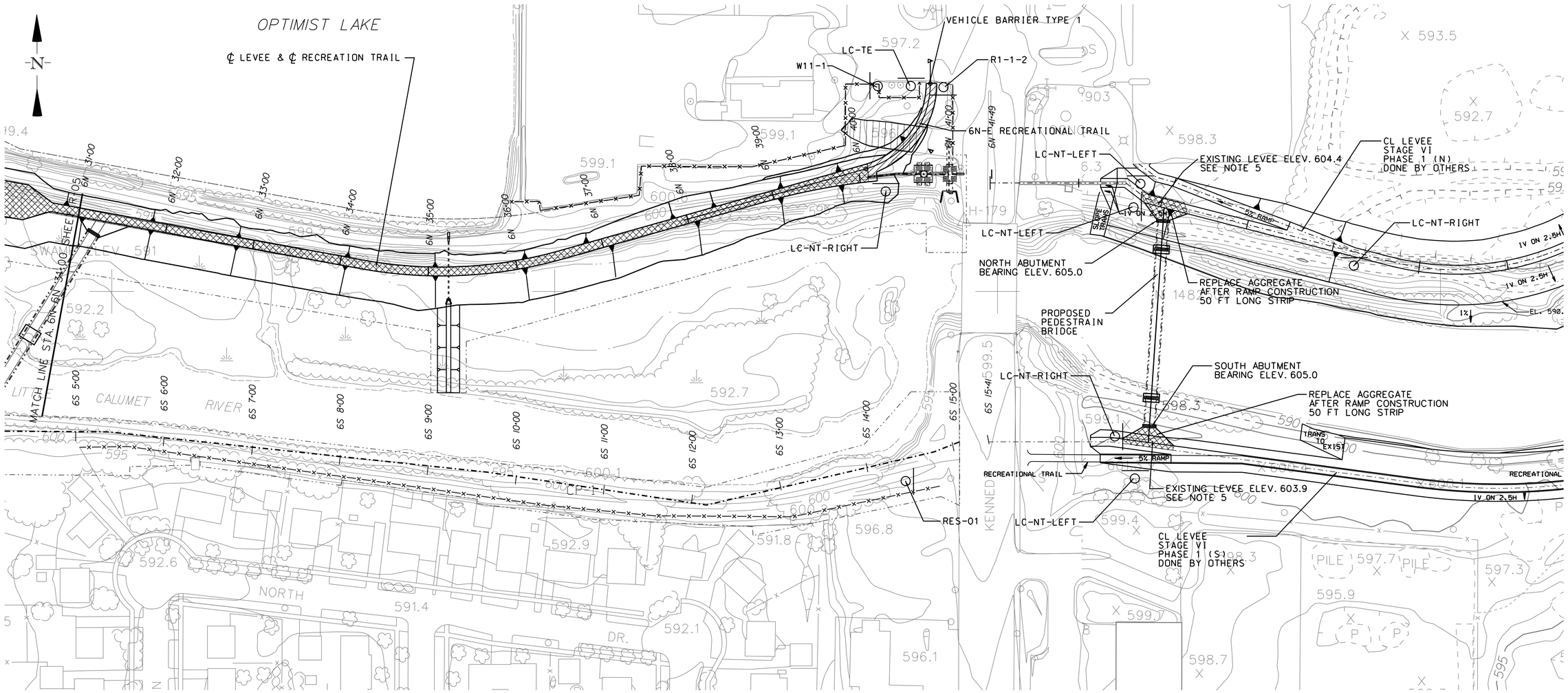

SCALE IN FEET

PLAN

LEGEND:

ASPHALT

AGGREGATE

CLEARING AND GRUBBING LIMITS

NOTES:

1. FOR SYMBOLS, ABBREVIATIONS, AND GENERAL NOTES, SEE SHEETS G-03 AND G-04.
2. SEE LEVEE, TRENCH AND DITCH TYPICAL SECTIONS, SHEET C-42.
3. FOR RECREATION TRAIL TYPICAL SECTIONS, SIGNS, AND DETAILS, SEE SHEETS R-07 TO R-10.
4. TRAIL/ROAD SURFACE IS SHOWN FOR ENTIRE CREST FOR CLARITY. SEE SHEET R-07 FOR ACTUAL CREST WIDTH.
5. CONSTRUCT RAMP FROM TOP OF BRIDGE DECK TO EXISTING LEVEE
6. FINAL BRIDGE DECK ELEVATION TO BE DETERMINED. ESTIMATED ELEV. = 607.0
7. SEE SHEET R-08 FOR SIGN SCHEDULE AND NOTES

US Army Corps of Engineers
Chicago District

SYMBOL	AMENDMENT DESCRIPTION	DATE APPROVED	SYMBOL	DESCRIPTION	DATE APPROVED

DESIGNED BY: JAG
DATE: AUG 2007
DRAWN BY: DB
SCALE: AS SHOWN
CHECKED BY: WK
SOLICITATION NUMBER: W912P6-07-B-0006
SUBMITTED BY: JOHN GROBOSKI
DATE:

U.S. ARMY ENGINEER DISTRICT
CORPS OF ENGINEERS
CHICAGO, ILLINOIS

LITTLE CALUMET RIVER, INDIANA
LOCAL FLOOD PROTECTION
STAGE V, PHASE 2 - LEVEE

RECREATION AND MAINTENANCE ACCESS PLAN
STA. 6N 31+00 TO KENNEDY

SHEET REFERENCE NUMBER:
R-06

SHEET 72 OF 138

PLOT DATE: 8/6/2007
FILENAME: D:\working\dms10534\CS5R06.DGN

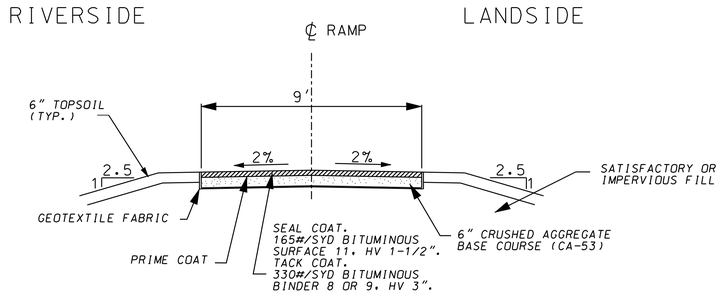

1 R-07 TYPICAL SECTION FOR ACCESS RAMPS WITH ASPHALT SURFACE

N.T.S.

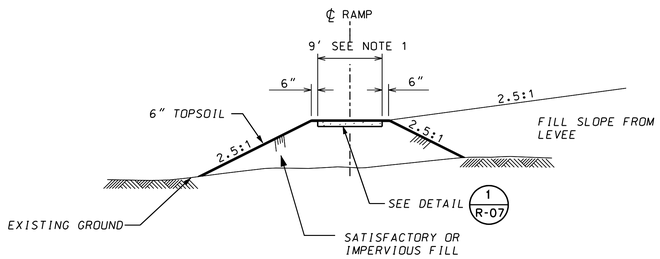

2 R-07 TYPICAL SECTION FOR ASPHALT RAMPS

N.T.S.

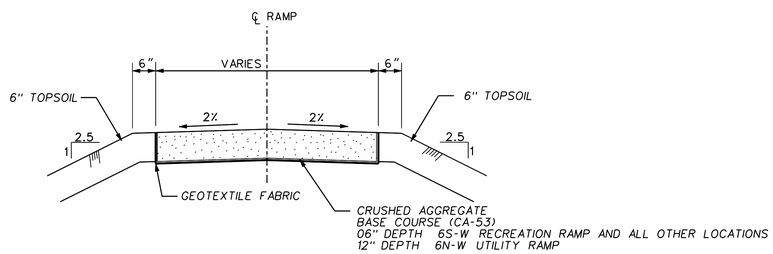

3 R-07 TYPICAL SECTION FOR AGGREGATE RAMPS

N.T.S.

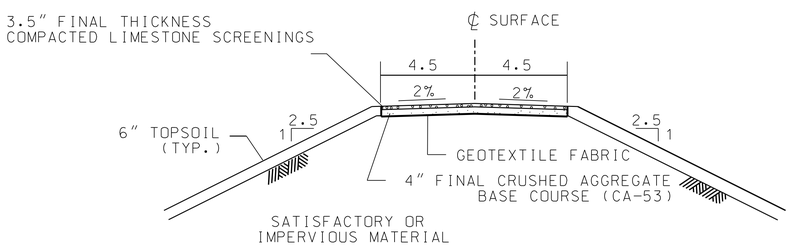

4 R-07 TYPICAL SECTION RECREATION TRAIL

N.T.S.

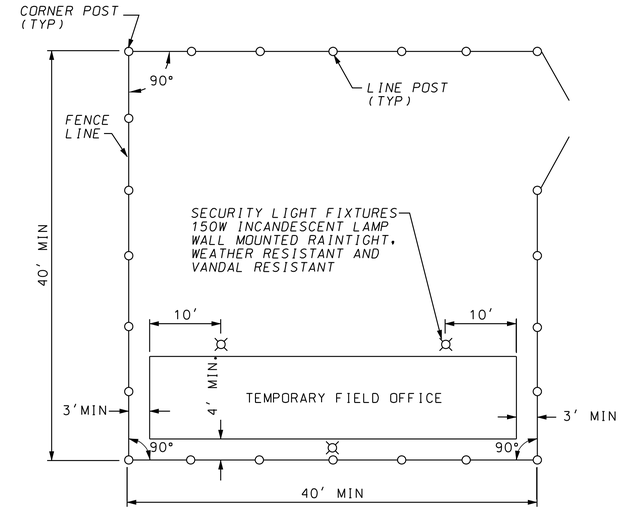

4 R-07 TEMPORARY FIELD OFFICE SECURITY FENCE LAYOUT

N.T.S.

NOTES:

1. ALL RAMPS ARE 10 FT WIDE WITH THE FOLLOWING EXCEPTIONS:

RAMP	WIDTH FT
6N-E2	SEE SHEET C-58
6N-W UTILITY	SEE SHEET C-58
5N-E INDIANAPOLIS	12
6S-W UTILITY	12

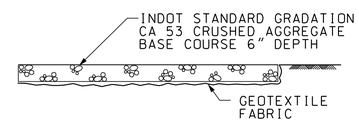

ALL OTHER SURFACES DESIGNATED FOR AGGREGATE SURFACE NOT COVERED ON THIS SHEET

6 R-07

N.T.S.

US Army Corps of Engineers Chicago District

SYMBOL	AMENDMENT DESCRIPTION	DATE APPROVED	SYMBOL	DESCRIPTION	DATE APPROVED

DESIGNED BY: JAG
DATE: AUG 2007
DRAWN BY: DB
SCALE: AS SHOWN
CHECKED BY: WK
SOLICITATION NUMBER: W912P6-07-B-0006
SUBMITTED BY: JOHN GROBOSKI
DATE:

U.S. ARMY ENGINEER DISTRICT CORPS OF ENGINEERS CHICAGO, ILLINOIS

LITTLE CALUMET RIVER, INDIANA LOCAL FLOOD PROTECTION STAGE V, PHASE 2 - LEVEE

RECREATION TRAIL & ACCESS RAMP TYPICAL SECTIONS

SHEET REFERENCE NUMBER: R-07

SHEET 73 OF 138

PLOT DATE: $DATE$
FILENAME: $FILENAME$

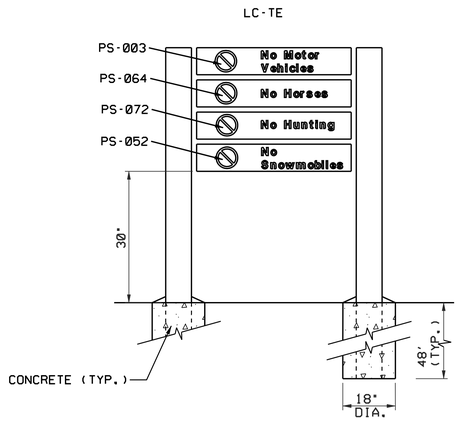

TRAIL ENTRANCE

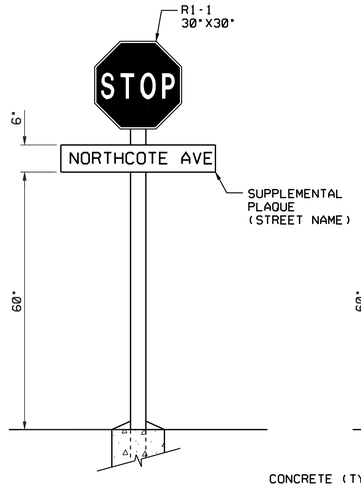

TRAIL STOP SIGN WITH STREET NAME

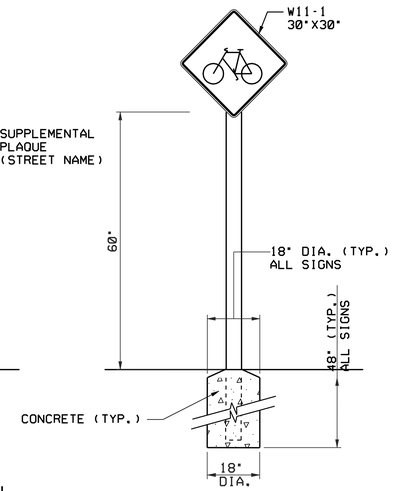

MOTORIST WARNING SIGN

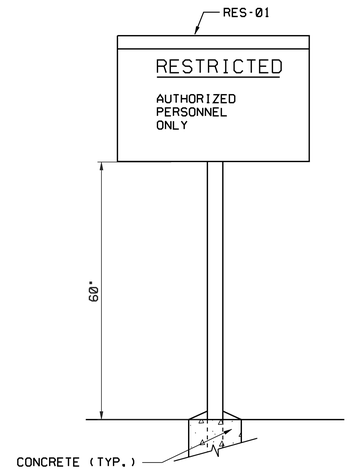

RESTRICTION SIGN

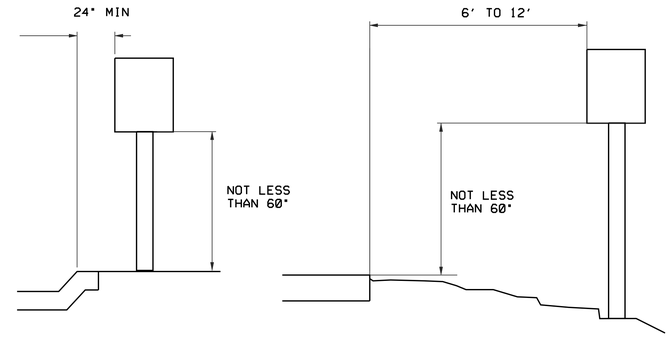

MOTORIST WARNING SIGN PLACEMENT

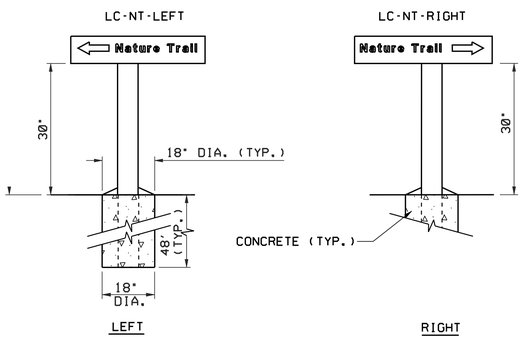

TRAIL DIRECTION SIGNS

SIGN SYMBOL SHEETS R-01 TO R-06

RES-01

SIGN TYPE	LEGEND SIZE (A)	PANEL SIZE	POST SIZE	SPECIFICATION CODE	MOUNTING HEIGHT	COLOR BKG/LGD
RES-01	.75"	11.875" X 11.875"	4" X 4"	HDO-5/HDO-6/ ALU-5/ALU-6	36"-60"	RED/WHITE

SIGN ID	DESCRIPTION	STREET NAME	QUANTITY
R1-1-0	STOP - STREET NAME	NORTHCOTE AVE.	1
R1-1-1	STOP - STREET NAME	PARKWAY DR.	1
R1-1-2	STOP - STREET NAME	KENNEDY AVE.	1
R1-1-3	STOP - STREET NAME	INDIANAPOLIS BLVD.	2
W11-1	BIKE CROSSING	--	5
RES-01	RESTRICTED	--	8
LC-TE	LC - TRAIL ENTRANCE	--	4
LC-NT-LEFT	LC - NATURE TRAIL LEFT	--	10
LC-NT-RIGHT	LC - NATURE TRAIL RIGHT	--	7

SCHEDULE OF SIGNS

NOTES:

1. SIGNS SHALL CONFORM TO THE MANUAL ON UNIFORM TRAFFIC CONTROL DEVICES. LATEST EDITION OR THE CORPS SIGN STANDARDS. EP 310-1-6A.

2. EP 310-1-6A IS CURRENTLY AVAILABLE ON THE WEB:

HTTP://CORPSLAKES.USACE.ARMY.MIL/EMPLOYEES/SIGN/MANUAL.HTML

THE FOLLOWING SECTIONS CONTAIN REFERENCES TO THE SIGNS LISTED ON THIS SHEET:

VOLUME 1: SECTION 9 - TRAFFIC SIGNS
VOLUME 1: SECTION 6 - DIRECTIONAL SIGNS
VOLUME 1: SECTION 7 - RECREATION SYMBOL SIGNS

3. APPROXIMATE LOCATION OF SIGNS IS IDENTIFIED ON SHEETS R-01 TO R-06. IF THE SIGN IS ON THE LEVEE OR ACCESS RAMP, IT SHALL BE PLACED AT THE EDGE OF THE CREST, SO AS NOT TO INTEFER WITH THE TRAVEL WAY.

4. THE CONTRACTOR SHALL PAINT, FLAG, OR STAKE LOCATIONS OF SIGNS, FOR FINAL APPROVAL OF THE COR. ONCE THE LOCATIONS HAVE BEEN APPROVED THE SIGNS MAY BE PLACED.

US Army Corps of Engineers
Chicago District

SYMBOL	AMENDMENT DESCRIPTION	DATE APPROVED	SYMBOL	DESCRIPTION	DATE APPROVED

DESIGNED BY: JAG
DATE: AUG 2007
DRAWN BY: DB
SCALE: AS SHOWN
CHECKED BY: WK
SOLICITATION NUMBER: W912P6-07-B-0006
SUBMITTED BY: JOHN GROBOSKI
DATE:

U.S. ARMY ENGINEER DISTRICT
CORPS OF ENGINEERS
CHICAGO, ILLINOIS

LITTLE CALUMET RIVER, INDIANA
LOCAL FLOOD PROTECTION
STAGE V, PHASE 2 - LEVEE

RECREATION TRAIL SIGNS

SHEET REFERENCE NUMBER:
R-08

PLOT DATE: 8/6/2007
FILENAME: D:\working\gms\05341\CSSR08.DGN

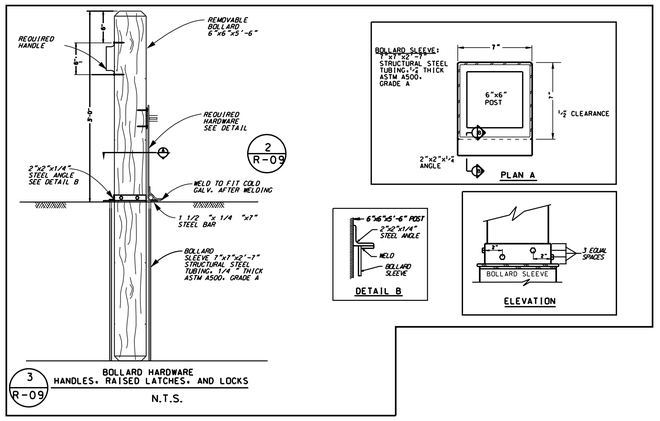

3 R-09 BOLLARD HARDWARE HANDLES, RAISED LATCHES, AND LOCKS
N.T.S.

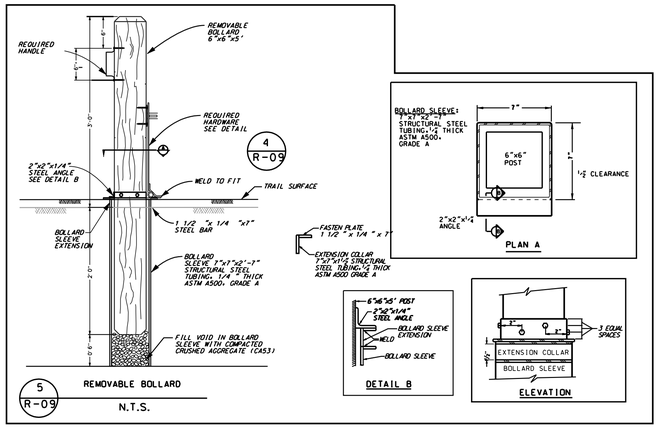

5 R-09 REMOVABLE BOLLARD
N.T.S.

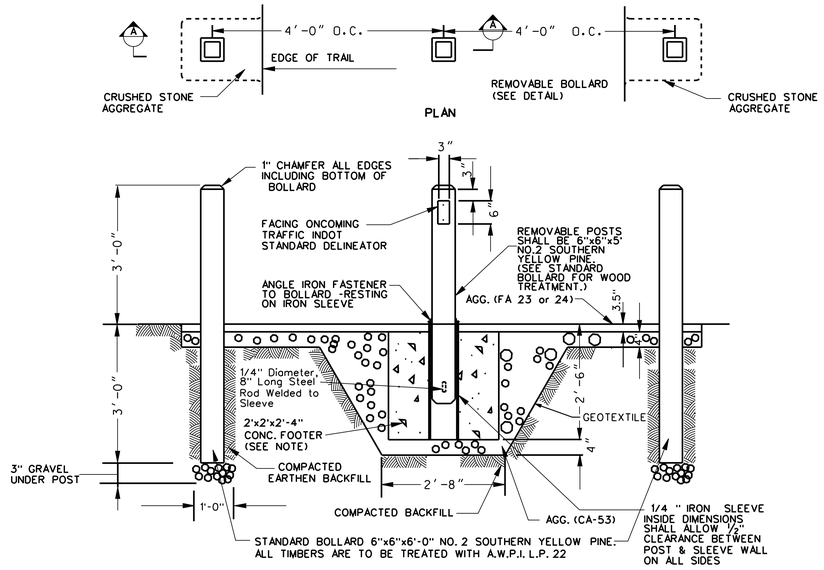

SECTION A-A

1 R-09 VEHICLE BARRIER TYPE 1 DETAILS
N.T.S.

UNLESS OTHERWISE NOTED ON SHEETS R-01 TO R-06. THERE SHALL BE THREE BOLLARDS AT THE SPACING SHOWN IN DETAIL ONE.

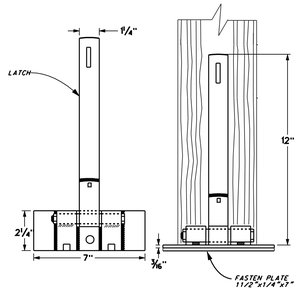

6 R-09 BOLLARDS WITH HANDLES, RAISED LATCHES, AND LOCKS
N.T.S.

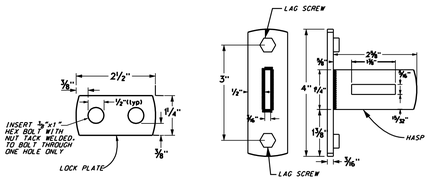

7 R-09 LATCHES AND LOCKS
N.T.S.

VEHICLE BARRIER NOTES:

1. THE CONTRACTOR SHALL PLACE AND COMPACT THE AGGREGATE BACKFILL IN 6" LIFTS AND TAKE CARE TO PLUMB EACH POST.
2. THE STEEL SLEEVES, ANGLES, PLATES, AND RODS SHALL BE PAINTED WITH TWO COATS OF RUST-OLEUM NO. 769 DAMP-PROOF RED PRIMER OR EQUAL PRIOR TO INSTALLATION .
3. FOR SIGN AND VEHICLE BARRIER LOCATIONS, SEE SHEET R-01.
4. ALL SIGN FOUNDATIONS SHALL BE CAST-IN-PLACE PORTLAND CEMENT CONCRETE.
5. ALL SIGNS SHALL CONFORM TO THE REQUIREMENTS OF THE U.S. ARMY CORPS OF ENGINEERS SIGN STANDARDS MANUAL: EP 310-1-6 (a & b).
6. ALL SIGN POSTS SHALL BE SHALL BE TREATED SOUTHERN YELLOW PINE NO.1. ALL SIGNS POSTS SHALL BE IMBEDDED A MINIMUM OF 4' IN THE CONCRETE FOUNDATION.
7. ALL HDO- SIGN PANELS SHALL BE 0.75" THICK UNLESS OTHERWISE INDICATED.
8. ALL HDO- AND ALU- SIGN PANELS SHALL HAVE 1" RADIUS ROUNDED CORNERS.
9. ALL SIGN ABBREVIATIONS AS DEFINTED IN THE MANUAL ON UNIFORM TRAFFIC CONTROL DEVICES (MUTCD) AND THE U.S. ARMY CORPS OF ENGINEERS SIGN STANDARD MANUAL.
10. FIELD LOCATE SIGN LOCATIONS IN ACCORDANCE TO INDOT STANDARDS. COORDINATES GIVEN ARE FOR REFERENCE ONLY.
11. VEHICLE BARRIERS MINIMUM OF 20' TO 25' FROM EDGE OF STREET PAVEMENT.
12. LIME STONE SCREENING IS TO BE PLACED AT LOOSE THICKNESS OF 1" BEFORE COMPACTION.

HARDWARE NOTES:

1. ALL ITEMS SHALL BE INSTALLED AT THE LOCATIONS SHOWN. ALL ITEMS SHALL BE HOT-DIPPED GALVANIZED PER ASTM A 123 UNLESS OTHERWISE NOTED.

2. FIT. WELDING TO OR ON STRUCTURAL STEEL SHALL BE IN ACCORDANCE WITH AWS D1.1. ITEMS SPECIFIED TO BE GALVANIZED, WHEN PRACTICABLE AND NOT INDICATED OTHERWISE, SHALL BE HOT-DIP GALVANIZED AFTER FABRICATION. GALVANIZING SHALL BE IN ACCORDANCE WITH ASTM A 123. EXPOSED FASTENINGS SHALL BE COMPATIBLE MATERIALS, SHALL GENERALLY MATCH IN COLOR AND FINISH, AND SHALL HARMONIZE WITH THE MATERIAL TO WHICH FASTENINGS ARE APPLIED. MATERIALS AND PARTS NECESSARY TO COMPLETE EACH ITEM, EVEN THOUGH SUCH WORK IS NOT DEFINITELY SHOWN OR SPECIFIED, SHALL BE INCLUDED. POOR MATCHING OF HOLES FOR FASTENERS SHALL BE CAUSE FOR REJECTION. FASTENINGS SHALL BE CONCEALED WHERE PRACTICABLE.

3. WORKMANSHIP. DRILLING AND PUNCHING SHALL PRODUCE CLEAN TRUE LINES AND SURFACES. WELDING SHALL BE CONTINUOUS ALONG THE ENTIRE AREA OF CONTACT EXCEPT WHERE TACK WELDING IS PERMITTED. EXPOSED CONNECTIONS OF WORK IN PLACE SHALL NOT BE TACK WELDED. EXPOSED WELDS SHALL BE GROUND SMOOTH. EXPOSED SURFACES OF WORK IN PLACE SHALL HAVE A SMOOTH FINISH, AND UNLESS OTHERWISE APPROVED, EXPOSED RIVETING SHALL BE FLUSH. WHERE TIGHT FITS ARE REQUIRED, JOINTS SHALL BE MILLED. CORNER JOINTS SHALL BE MITERED, WELL FORMED, AND IN TRUE ALIGNMENT. INSTALLATION SHALL BE IN ACCORDANCE WITH MANUFACTURER'S INSTALLATION INSTRUCTIONS AND APPROVED DRAWINGS, CUTS, AND DETAILS.

VEHICLE BARRIER SCHEDULE:

VEHICLE BARRIERS	QUANTITY
VEHICLE BARRIER TYPE 1	5
VEHICLE BARRIER TYPE 2	8
A-FRAME GATE	5

SEE SHEET R-10 FOR A-FRAME GATE DETAILS

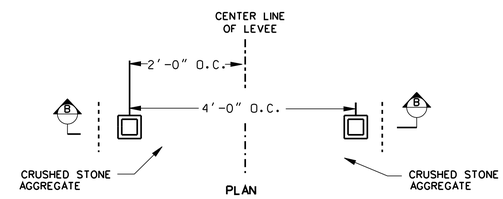

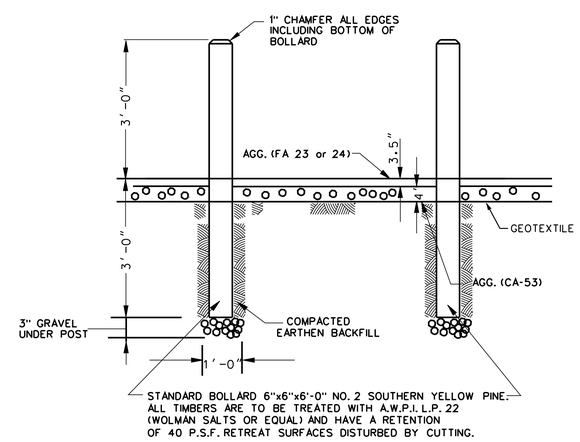

SECTION B-B

8 R-09 VEHICLE BARRIER TYPE 2 DETAILS
N.T.S.

UNLESS OTHERWISE NOTED ON SHEETS R-01 TO R-06. THERE SHALL BE TWO BOLLARDS AT THE SPACING SHOWN IN DETAIL EIGHT. WHEN MORE THAN TWO BOLLARDS ARE SPECIFIED ON THE DRAWINGS, THE LOCATION AND SPACING SHALL BE DETERMINED BY THE COR.

US Army Corps of Engineers Chicago District

SYMBOL	AMENDMENT DESCRIPTION	DATE APPROVED SYMBOL	DESCRIPTION	DATE APPROVED

DESIGNED BY: SARG DATE: AUG 2007
DRAWN BY: BB, CJ SCALE: AS SHOWN
CHECKED BY: BWR SOLICITATION NUMBER: W912P6-07-B-0006
SUBMITTED BY: JOHN GROBOSKI DATE:

U.S. ARMY ENGINEER DISTRICT
CORPS OF ENGINEERS
CHICAGO, ILLINOIS

LITTLE CALUMET RIVER, INDIANA
LOCAL FLOOD PROTECTION
STAGE V, PHASE 2 - LEVEE

VEHICLE BARRIER DETAILS

SHEET REFERENCE NUMBER:
R-09
SHEET 75 OF 138

PLOT DATE: $DATE$
FILENAME: $FILENAME$

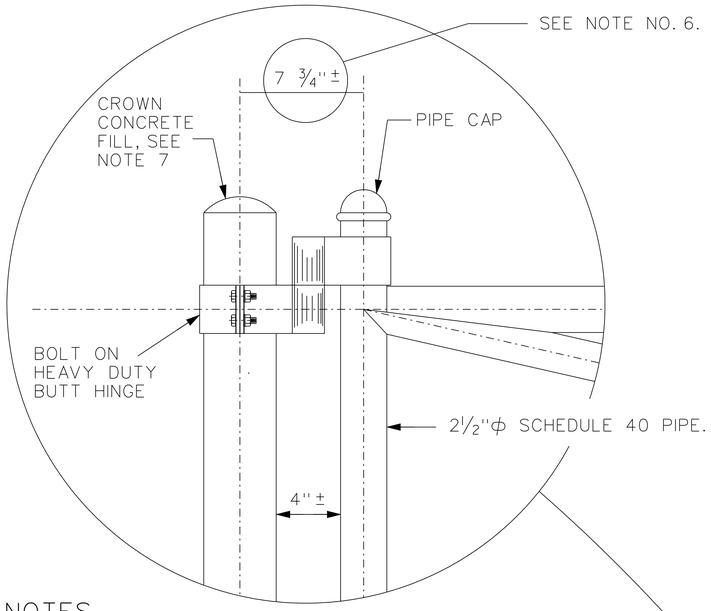

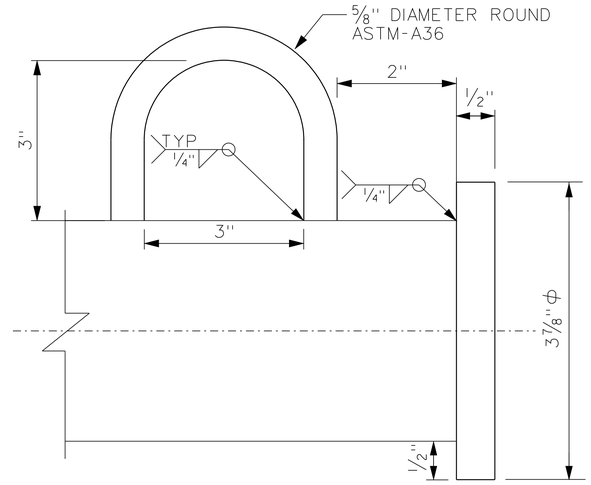

1 / R-10

HASP DETAIL

N.T.S.

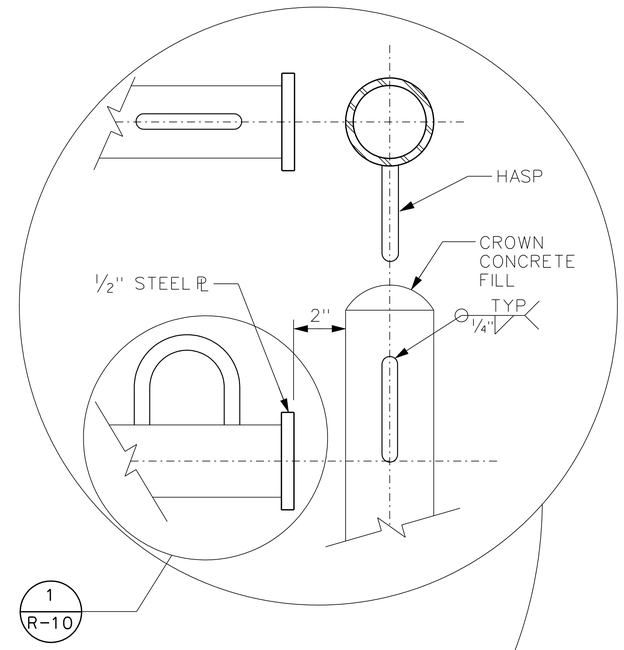

NOTES

1. DRILL WEEP HOLES IN THE BOTTOM OF THE PIPES BEFORE THE GATE IS HOT DIPPED GALVANIZED.
2. SEE SPECIFICATIONS FOR FABRICATION REQUIREMENTS.
3. ALL PIPE SHALL CONFORM TO ASTM A53.
4. ALL STEEL PLATE SHALL CONFORM TO ASTM A36.
5. DIMENSION WILL VARY DEPENDING ON THE DIMENSION OF THE BUTT HINGE.
6. FIELD WELDING IS NOT PERMITTED.
7. THE EXPOSED SURFACE OF THE CONCRETE SHALL BE CROWNED TO SHED WATER.
8. ALL BOLTS SHALL BE PEENED.
9. SUPPLY EACH GATE WITH 2 - CHAINS 33" LONG 1/2" GRADE 30 PROOF COIL ZINC PLATED.

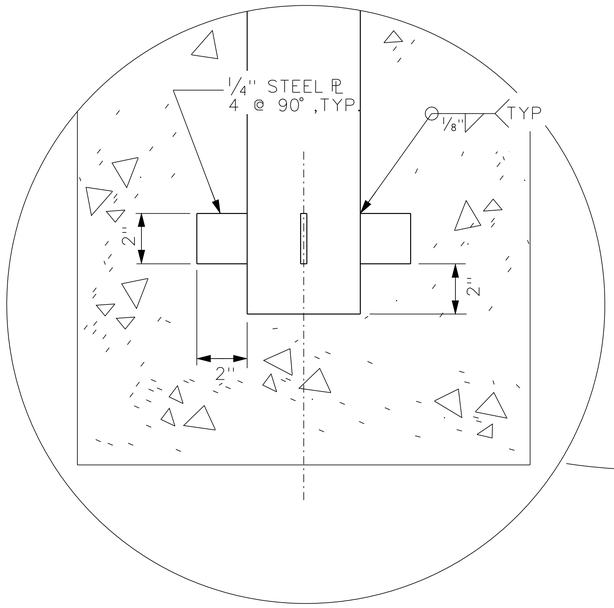

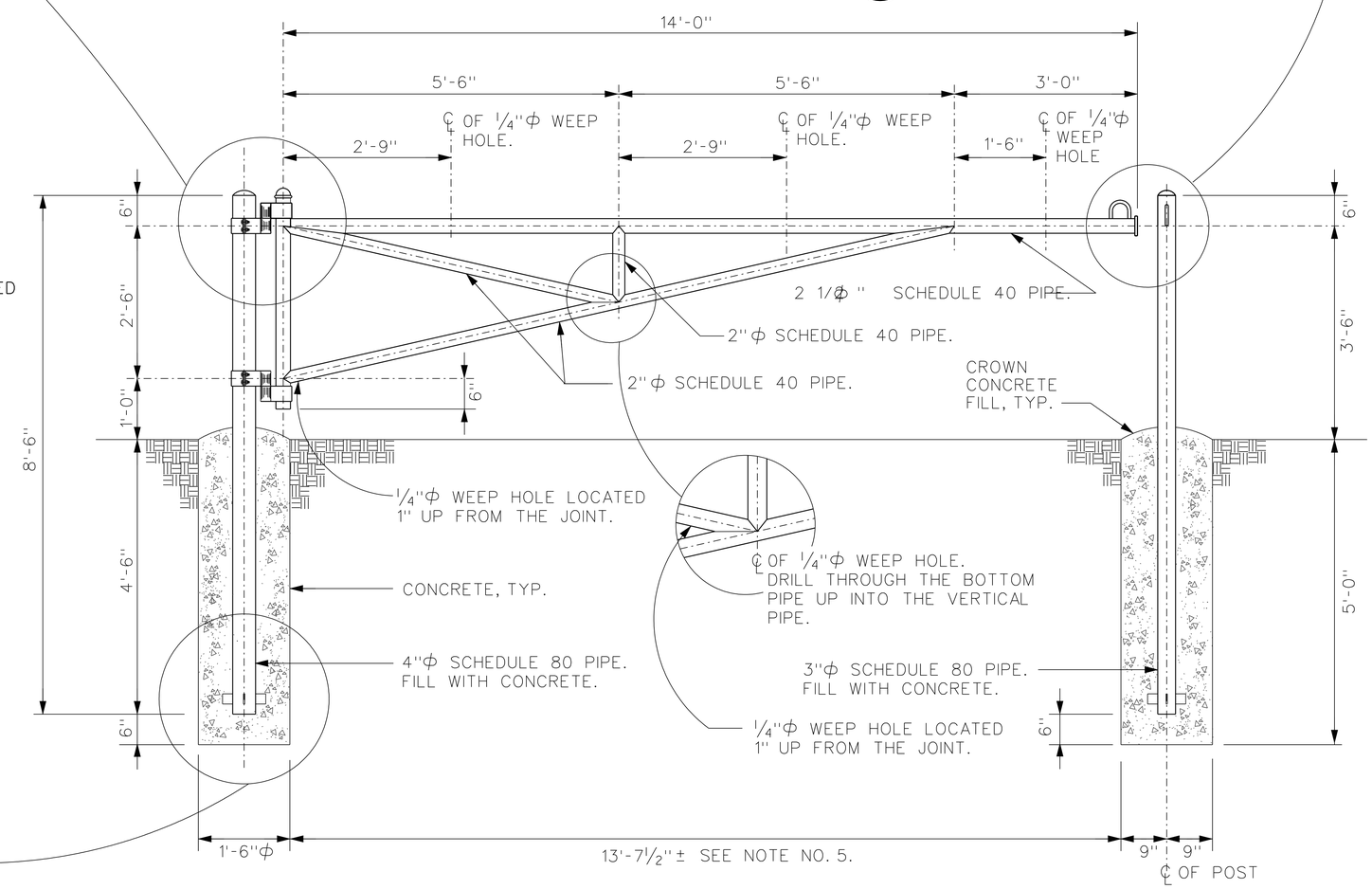

2 / R-10

A-FRAME GATE ELEVATION

SCALE: 1"=1'-0"

12" 0" 1' 2' 3' 4'
SCALE: 1" = 1'-0"

US Army Corps of Engineers
Chicago District

SYMBOL	AMENDMENT DESCRIPTION	DATE APPROVED	SYMBOL	DESCRIPTION	DATE APPROVED

DESIGNED BY: JAG
DATE: AUG 2007
DRAWN BY: DB
SCALE: AS SHOWN
CHECKED BY: WK
SOLICITATION NUMBER: W912P6-07-B-0006
SUBMITTED BY: JOHN GROBOSKI
DATE:

U.S. ARMY ENGINEER DISTRICT
CORPS OF ENGINEERS
CHICAGO, ILLINOIS

LITTLE CALUMET RIVER, INDIANA
LOCAL FLOOD PROTECTION
STAGE V, PHASE 2 - LEVEE

A-FRAME GATE
ELEVATION AND DETAILS

SHEET REFERENCE NUMBER:
R-10

PLOT DATE: 8/6/2007
FILENAME: D:\working\dms10534\LCSSR10.DGN

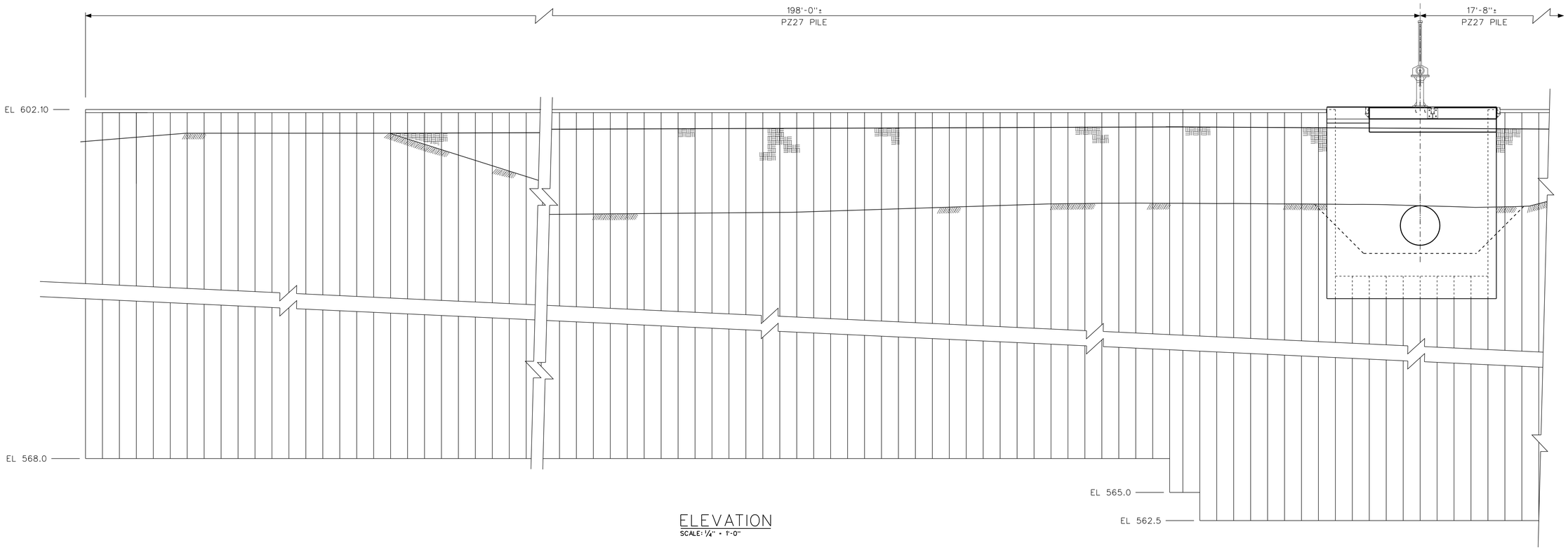

ELEVATION
SCALE: 1/4" = 1'-0"

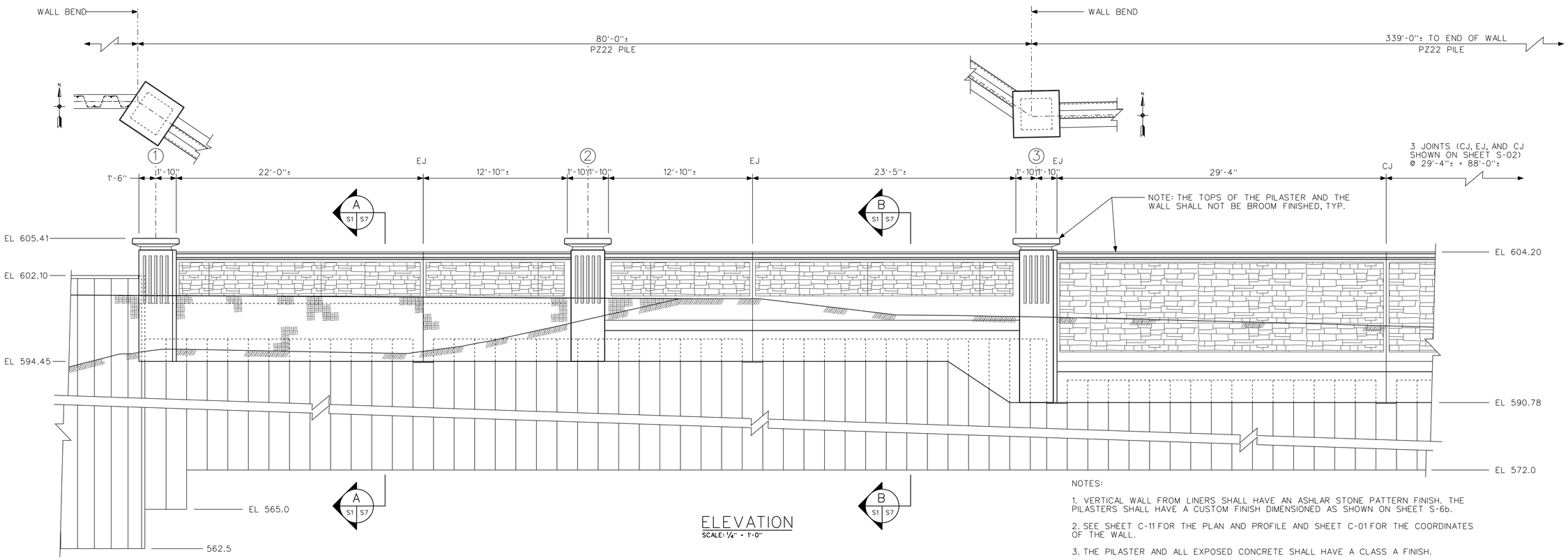

ELEVATION
SCALE: 1/4" = 1'-0"

NOTES:

1. VERTICAL WALL FROM LINERS SHALL HAVE AN ASHLAR STONE PATTERN FINISH. THE PILASTERS SHALL HAVE A CUSTOM FINISH DIMENSIONED AS SHOWN ON SHEET S-6b.

2. SEE SHEET C-11 FOR THE PLAN AND PROFILE AND SHEET C-01 FOR THE COORDINATES OF THE WALL.

3. THE PILASTER AND ALL EXPOSED CONCRETE SHALL HAVE A CLASS A FINISH.

US Army Corps of Engineers
Chicago District

SYMBOL	AMENDMENT DESCRIPTION	DATE APPROVED	SYMBOL	DESCRIPTION	DATE APPROVED

DESIGNED BY: EGS
DATE: AUGUST 2007
DRAWN BY: EGS
SCALE: AS SHOWN
CHECKED BY: JJS
SOLICITATION NUMBER: W912P6-07-B-0006
SUBMITTED BY: STEVE TREHARNE
DATE:

U.S. ARMY ENGINEER DISTRICT
CORPS OF ENGINEERS
CHICAGO, ILLINOIS

LITTLE CALUMET RIVER, INDIANA
LOCAL FLOOD PROTECTION
STAGE V, PHASE 2

BARING PUMP STATION I-WALL
ELEVATIONS

SHEET REFERENCE NUMBER:
S-01
SHEET 77 OF 138

PLOT DATE: 8/6/2007
FILENAME: D:\working\sm224959\LRC52-S01.dgn

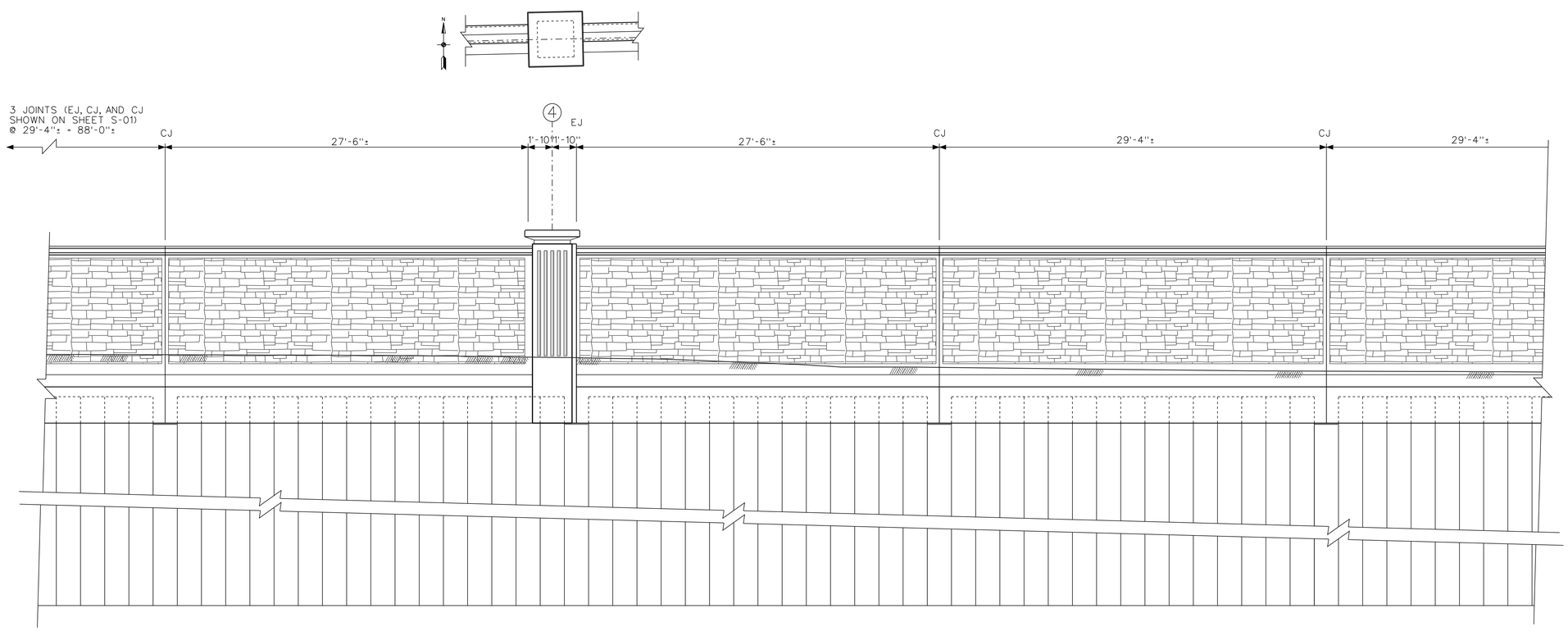

ELEVATION
SCALE: 1/4" = 1'-0"

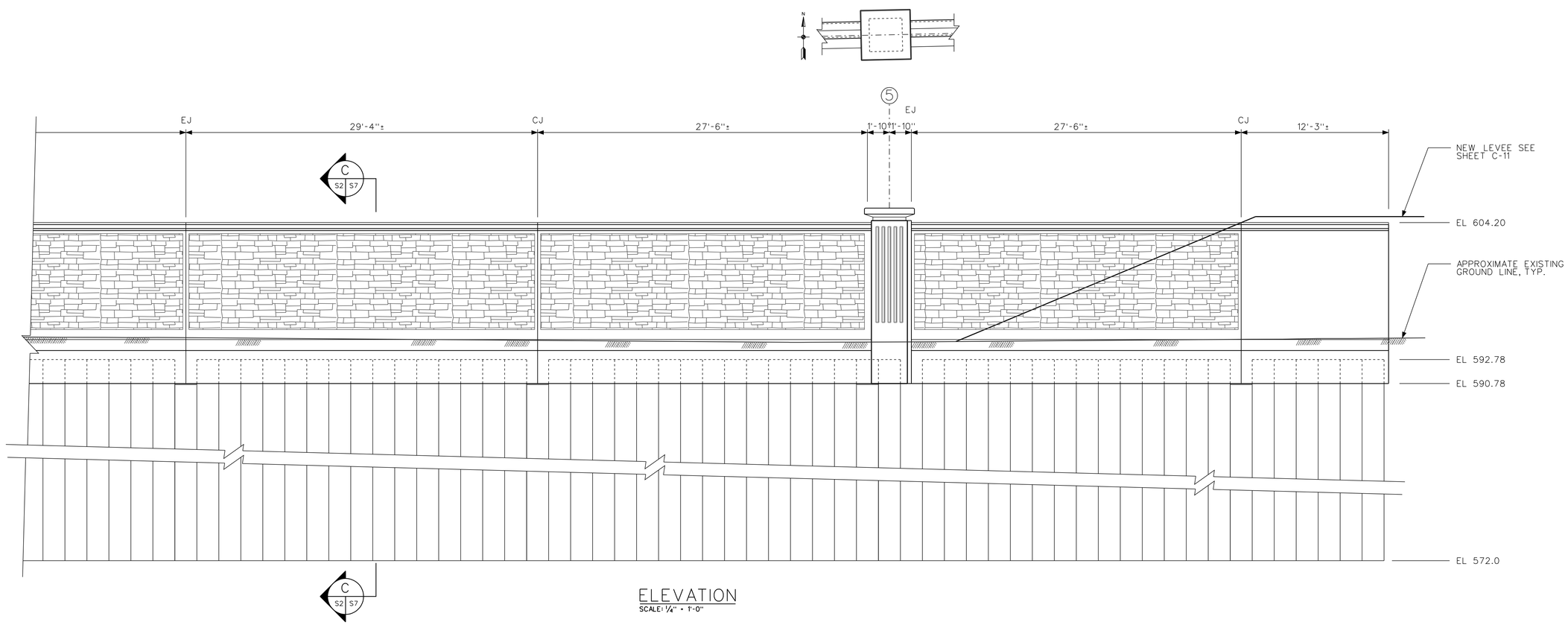

ELEVATION
SCALE: 1/4" = 1'-0"

US Army Corps of Engineers
Chicago District

SYMBOL	AMENDMENT DESCRIPTION	DATE APPROVED	SYMBOL	DESCRIPTION	DATE APPROVED

DESIGNED BY: EGS
DATE: AUGUST 2007
DRAWN BY: EGS
SCALE: AS SHOWN
CHECKED BY: JJS
SOLICITATION NUMBER: W912P6-07-B-0006
SUBMITTED BY: STEVE TREHARNE
DATE:

U.S. ARMY ENGINEER DISTRICT
CORPS OF ENGINEERS
CHICAGO, ILLINOIS

LITTLE CALUMET RIVER, INDIANA
LOCAL FLOOD PROTECTION
STAGE V, PHASE 2

BARING PUMP STATION I-WALL
ELEVATIONS SHEET 2

SHEET REFERENCE NUMBER:
S-02

PLOT DATE: 8/6/2007
FILENAME: D:\working\sm24959\LRG52-S02.dgn

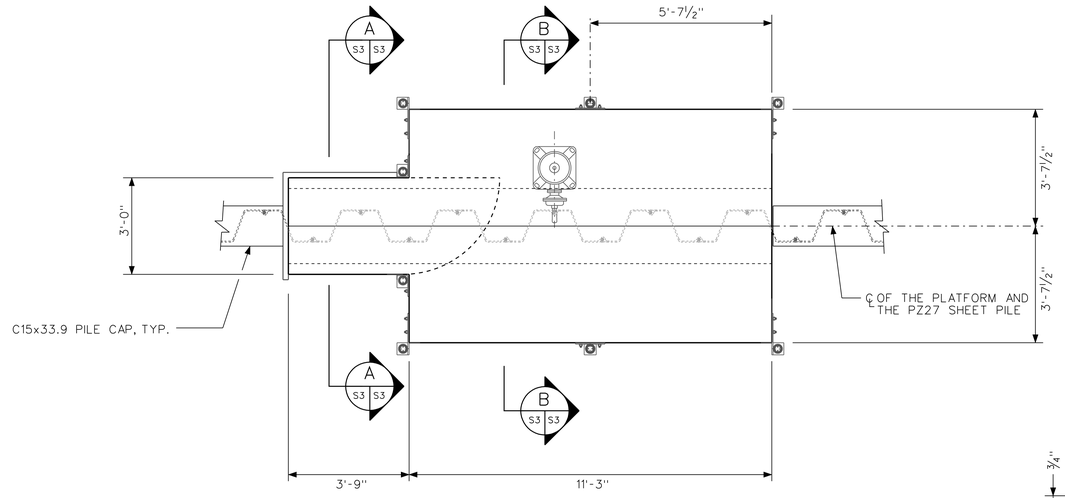

PLAN
SCALE: ½" = 1'-0"

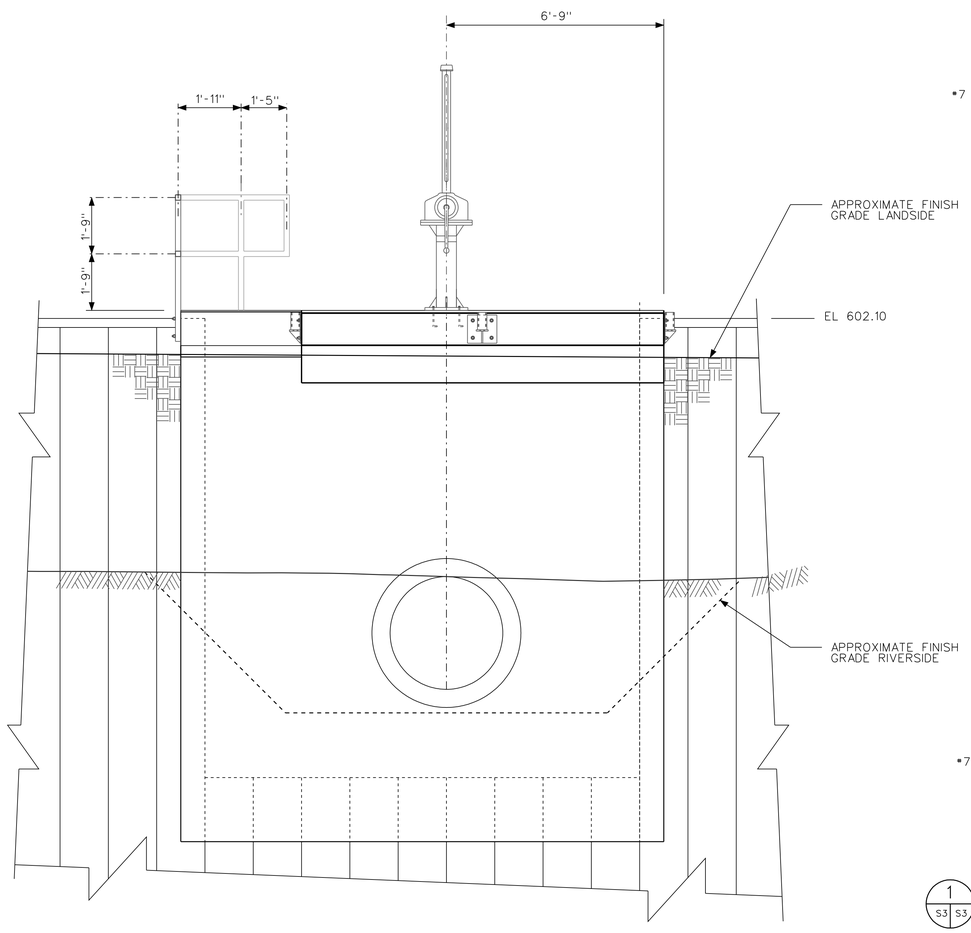

ELEVATION
SCALE: ½" = 1'-0"

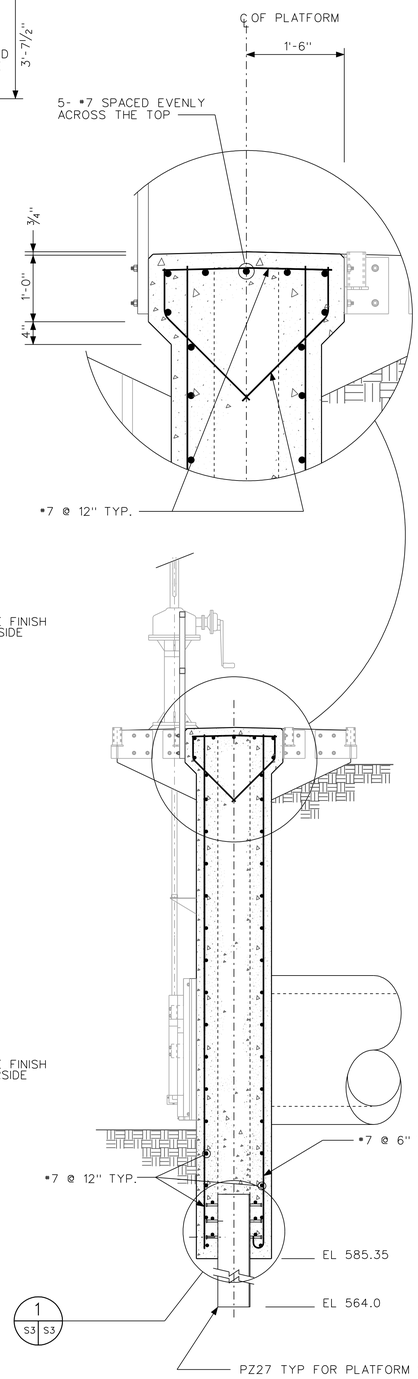

SECTION A
SCALE: ½" = 1'-0"

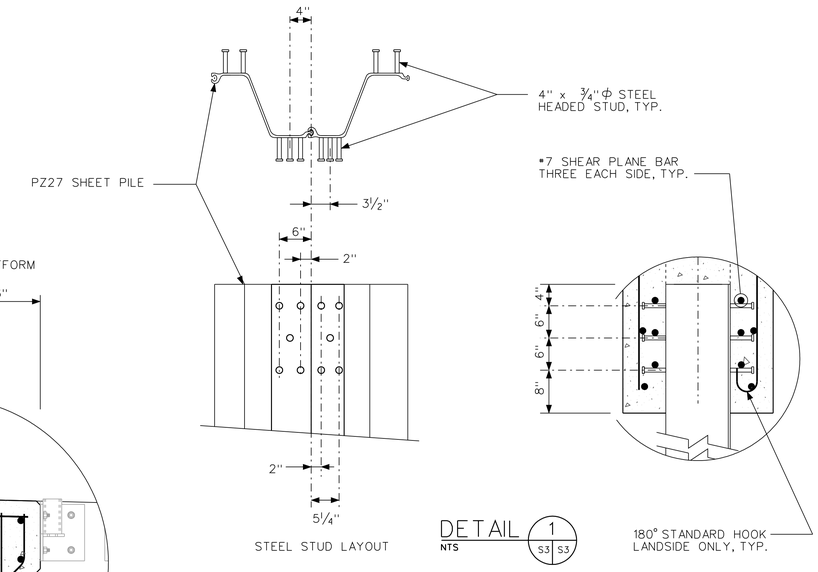

DETAIL 1
S3 S3
NTS

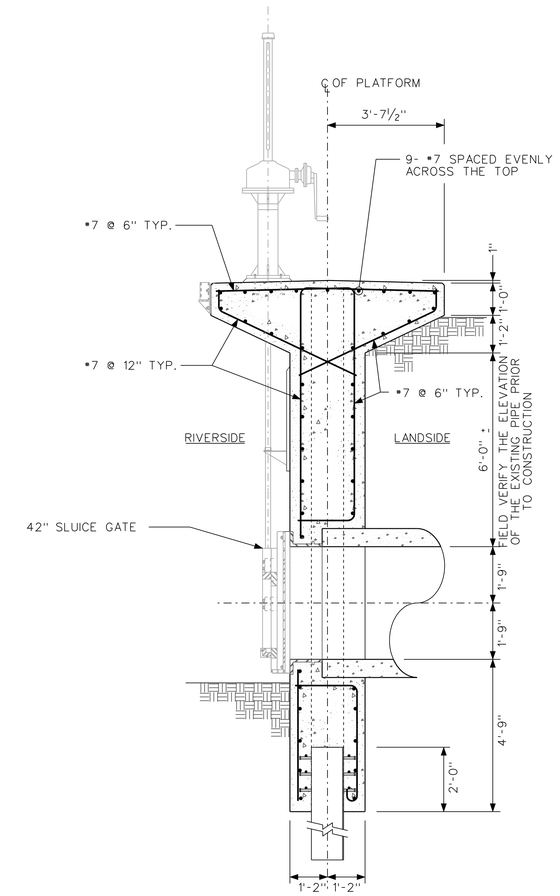

SECTION B
SCALE: ½" = 1'-0"

12 0 1 2 3 4 5
SCALE: ½" = 1'-0"

US Army Corps of Engineers
Chicago District

SYMBOL	AMENDMENT DESCRIPTION	DATE APPROVED	SYMBOL	DESCRIPTION	DATE APPROVED

DESIGNED BY: EGS
DRAWN BY: EGS
CHECKED BY: JJS
SUBMITTED BY: STEVE TREHARNE
DATE: AUGUST 2007
SCALE: AS SHOWN
SOLICITATION NUMBER: W912P6-07-B-0006
DATE:

U.S. ARMY ENGINEER DISTRICT
CORPS OF ENGINEERS
CHICAGO, ILLINOIS

LITTLE CALUMET RIVER, INDIANA
LOCAL FLOOD PROTECTION
STAGE V, PHASE 2

BARING PUMP STATION
ELEVATION AND SECTIONS

SHEET REFERENCE NUMBER:
S-03
SHEET 79 OF 138

PLOT DATE: 8/6/2007
FILENAME: D:\working\dms24959\LRC52-S03.dgn

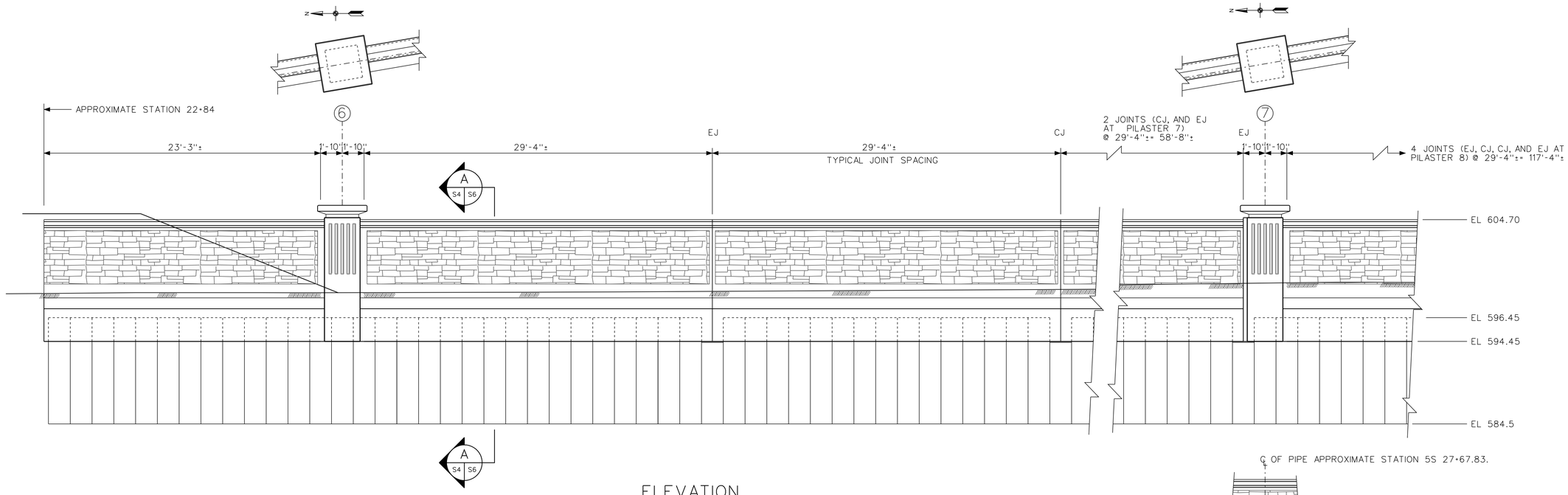

ELEVATION
SCALE: 1/4" = 1'-0"

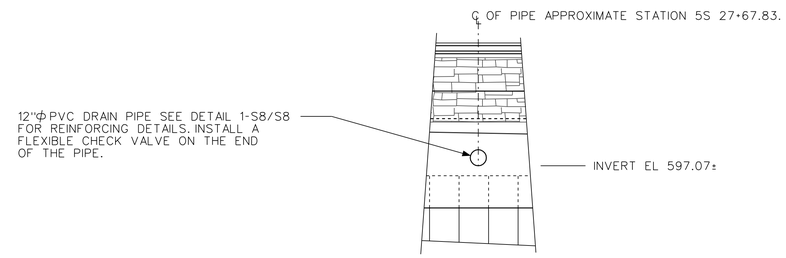

DETAIL 1
SCALE: 1/4" = 1'-0" S4 S4

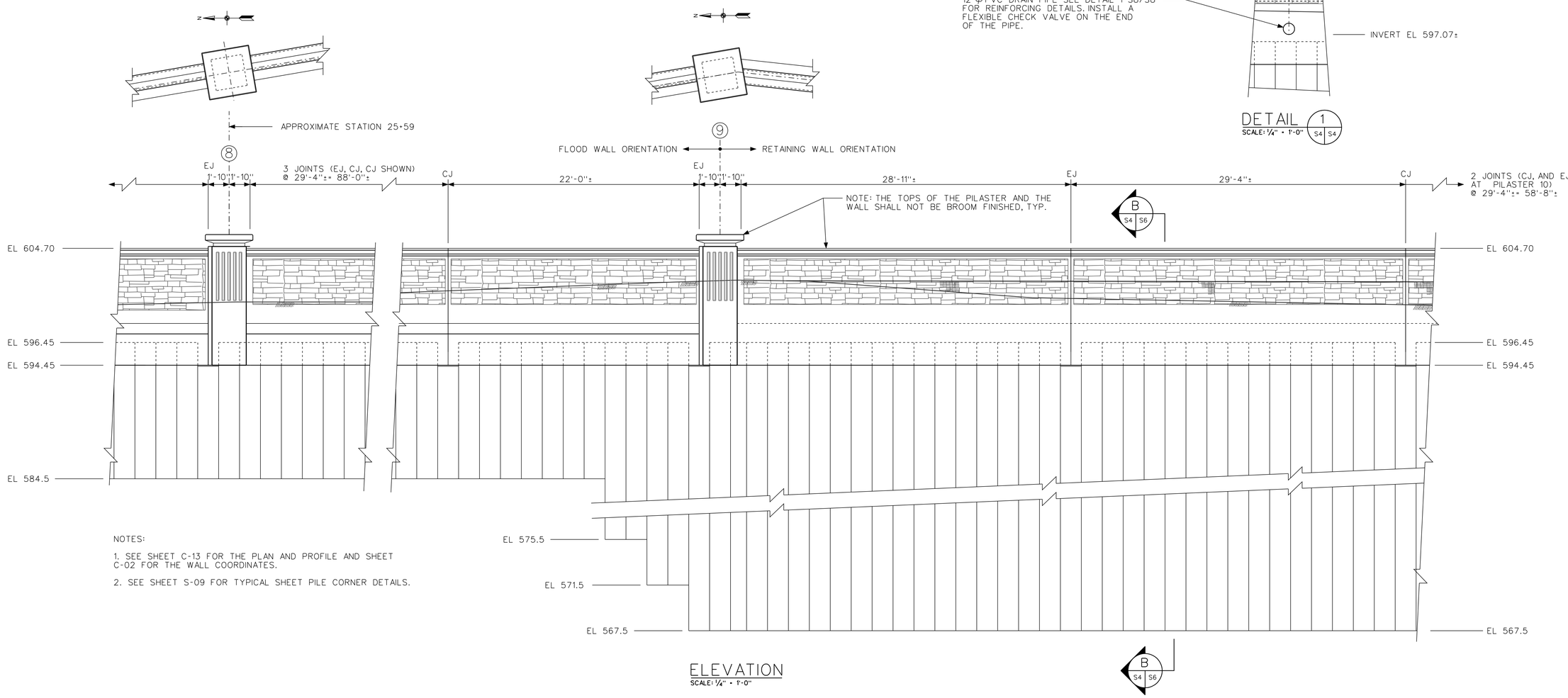

NOTES:

1. SEE SHEET C-13 FOR THE PLAN AND PROFILE AND SHEET C-02 FOR THE WALL COORDINATES.

2. SEE SHEET S-09 FOR TYPICAL SHEET PILE CORNER DETAILS.

ELEVATION
SCALE: 1/4" = 1'-0"

US Army Corps of Engineers
Chicago District

SYMBOL	AMENDMENT DESCRIPTION	DATE APPROVED	SYMBOL	DESCRIPTION	DATE APPROVED

DESIGNED BY: EGS
DATE: AUGUST 2007
DRAWN BY: EGS
SCALE: AS SHOWN
CHECKED BY: JJS
SOLICITATION NUMBER: W912P6-07-B-0006
SUBMITTED BY: STEVE TREHARNE
DATE:

U.S. ARMY ENGINEER DISTRICT
CORPS OF ENGINEERS
CHICAGO, ILLINOIS

LITTLE CALUMET RIVER, INDIANA
LOCAL FLOOD PROTECTION
STAGE V, PHASE 2

HART DITCH I-WALL
ELEVATIONS

SHEET REFERENCE NUMBER:
S-04
SHEET 80 OF 138

PLOT DATE: 8/6/2007
FILENAME: D:\working\oms24959\LRC52-S04.dgn

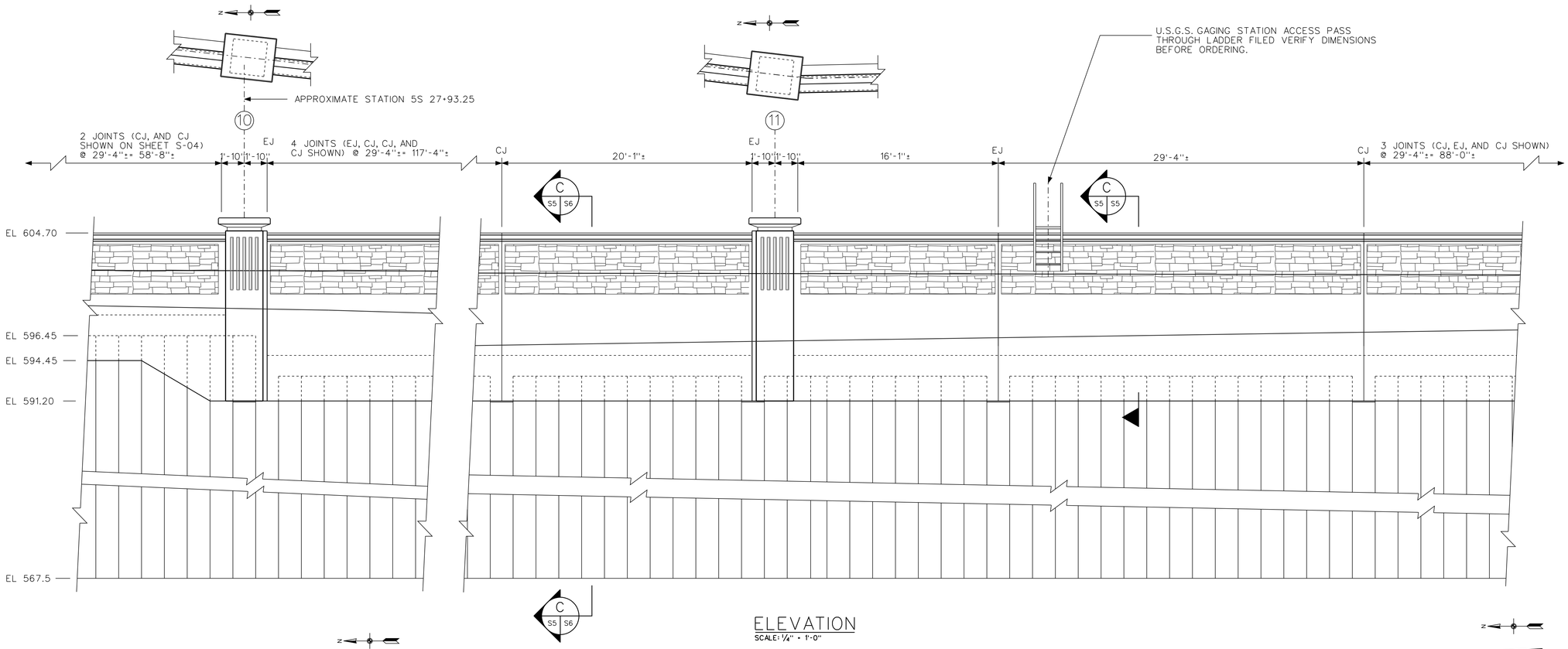

ELEVATION
SCALE: 1/4" = 1'-0"

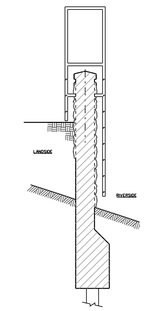

SECTION A
SCALE: 1/2" = 1'-0"

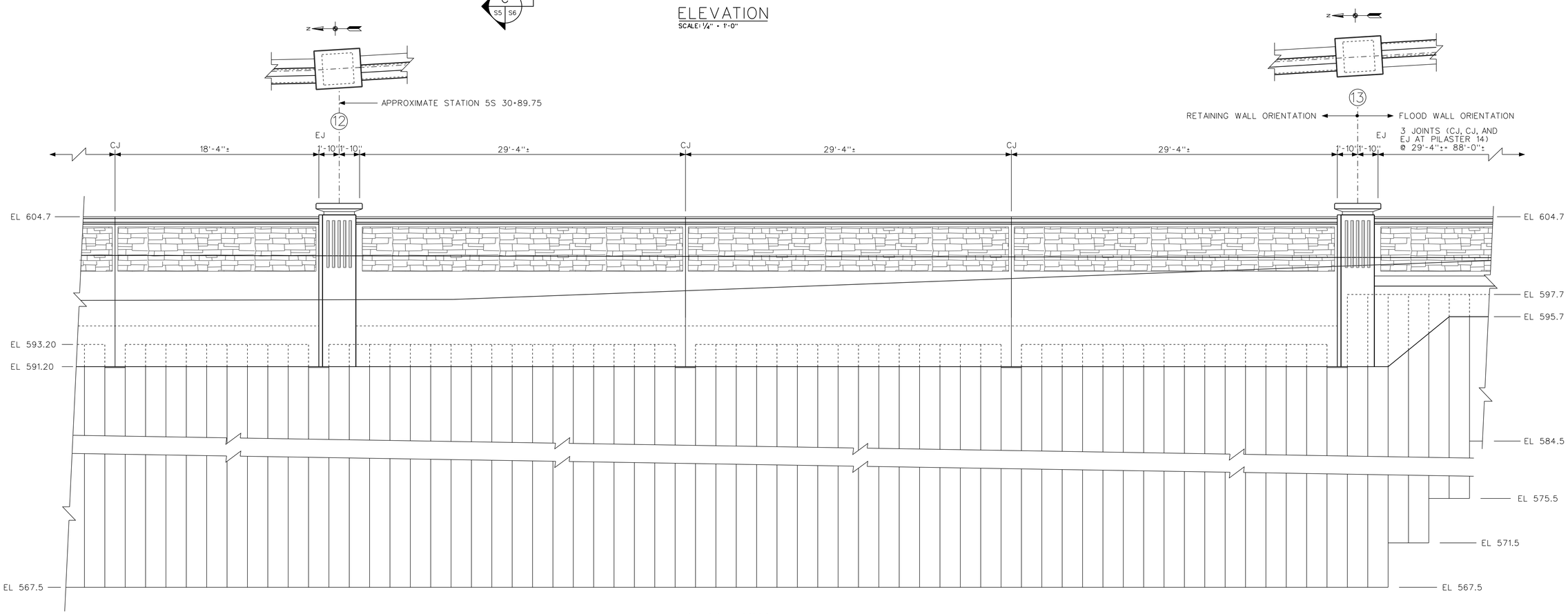

ELEVATION
SCALE: 1/4" = 1'-0"

US Army Corps of Engineers
Chicago District

SYMBOL	AMENDMENT DESCRIPTION	DATE APPROVED	SYMBOL	DESCRIPTION	DATE APPROVED

DESIGNED BY: EGS
DATE: AUGUST 2007
DRAWN BY: EGS
SCALE: AS SHOWN
CHECKED BY: JJS
SOLICITATION NUMBER: W912P6-07-B0006
SUBMITTED BY: STEVE TREHARNE
DATE:

U.S. ARMY ENGINEER DISTRICT
CORPS OF ENGINEERS
CHICAGO, ILLINOIS

LITTLE CALUMET RIVER, INDIANA
LOCAL FLOOD PROTECTION
STAGE V, PHASE 2

HART DITCH I-WALL
ELEVATIONS SHEET 2

SHEET REFERENCE NUMBER:
S-05
SHEET 81 OF 138

PLOT DATE: 8/6/2007
FILENAME: D:\working\dms24959\LRC52-S05.dgn

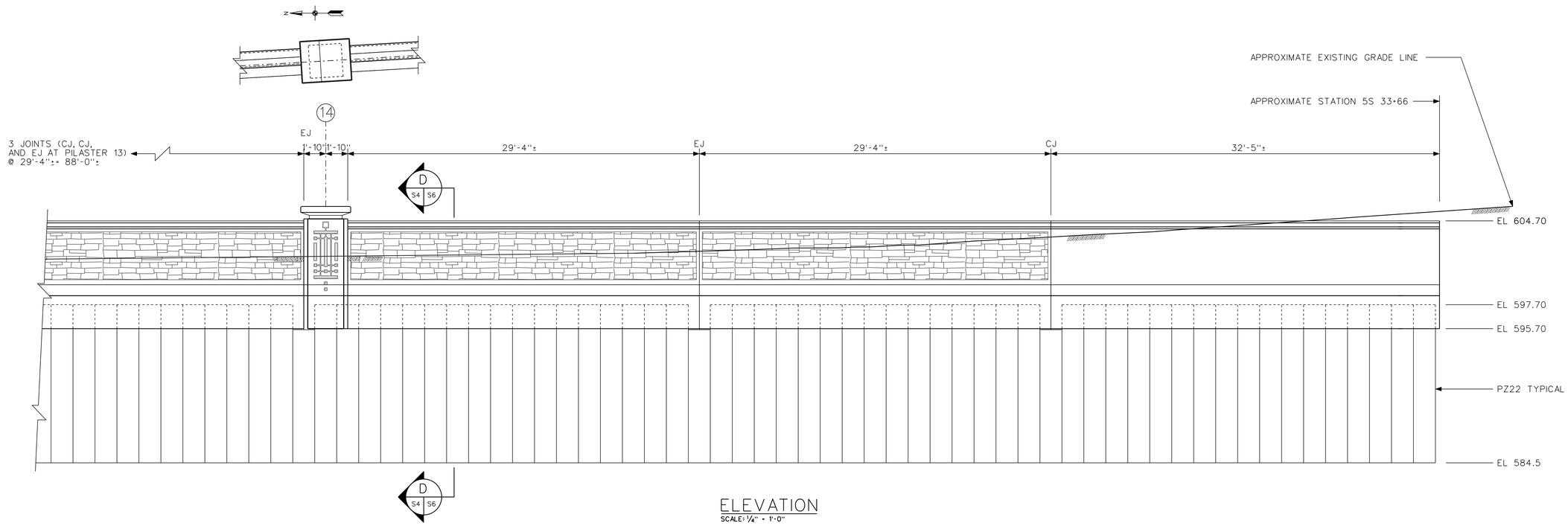

ELEVATION
SCALE: 1/4" = 1'-0"

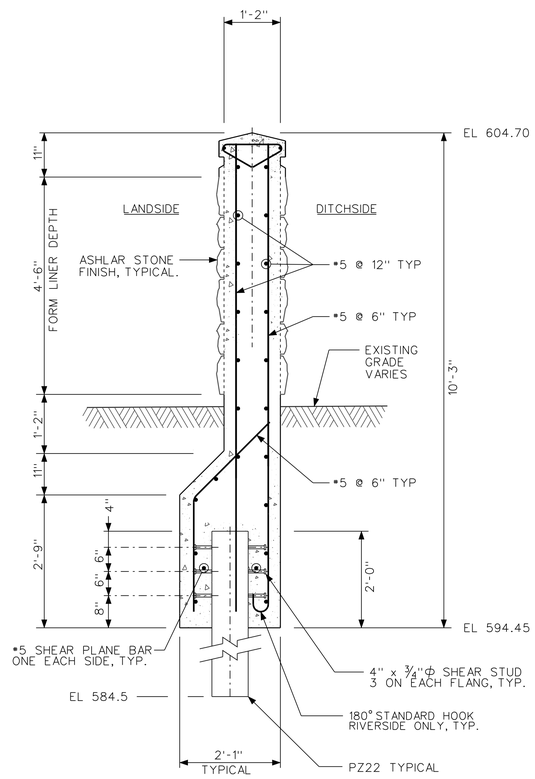

TYPICAL SECTION BETWEN THE START OF THE WALL AND PILASTER NO 9

SECTION A (S4 S6)
SCALE: 1/2" = 1'-0"

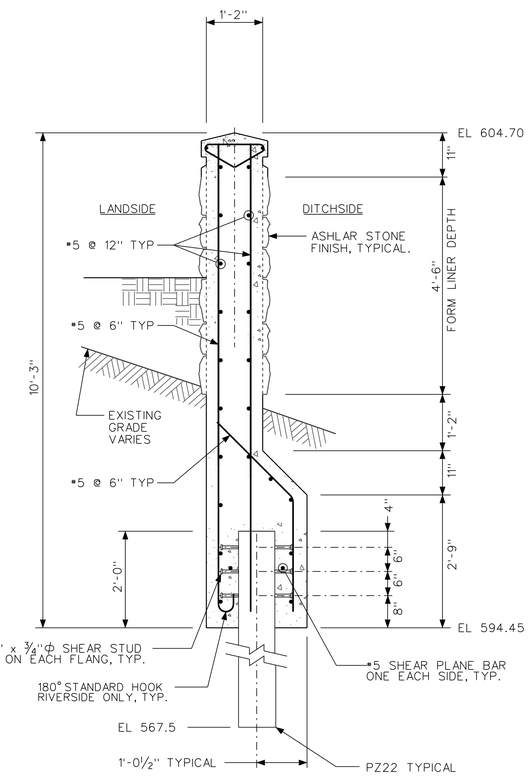

TYPICAL SECTION BETWEEN PILASTERS NO 9 AND NO 10

SECTION B (S4 S6)
SCALE: 1/2" = 1'-0"

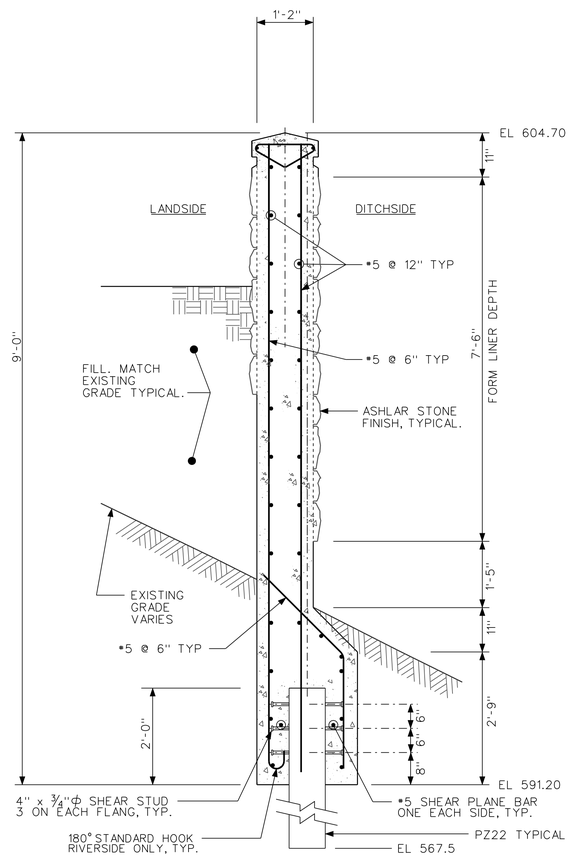

TYPICAL SECTION BETWEEN PILASTER NO 10 AND NO 13

SECTION C (S5 S6)
SCALE: 1/2" = 1'-0"

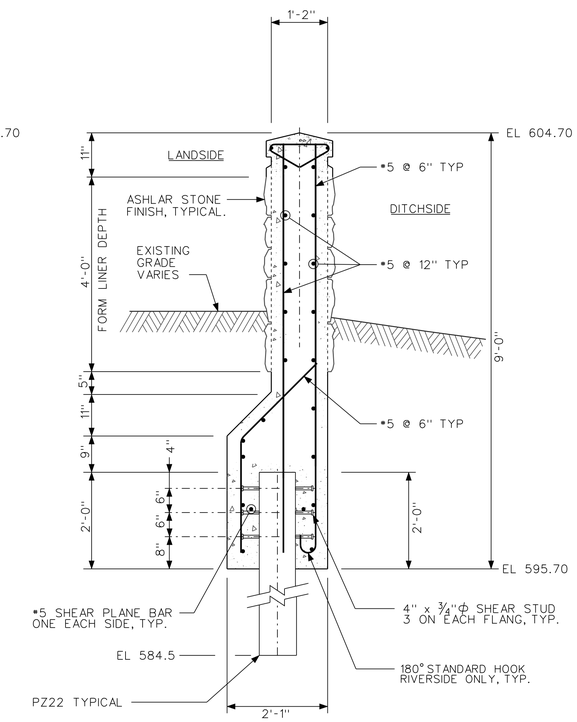

TYPICAL SECTION BETWEEN PILASTER NO 13 AND THE END OF THE WALL.

SECTION D (S6 S6)
SCALE: 1/2" = 1'-0"

NOTE: ALL COVER 3" UNLESS OTHERWISE NOTED.

US Army Corps of Engineers
Chicago District

SYMBOL	AMENDMENT DESCRIPTION	DATE APPROVED	SYMBOL	DESCRIPTION	DATE APPROVED

DESIGNED BY: EGS
DATE: AUGUST 2007
DRAWN BY: EGS
SCALE: AS SHOWN
CHECKED BY: JJS
SOLICITATION NUMBER: W912P8-07-B-0006
SUBMITTED BY: STEVE TREHARNE
DATE:

U.S. ARMY ENGINEER DISTRICT
CORPS OF ENGINEERS
CHICAGO, ILLINOIS

LITTLE CALUMET RIVER, INDIANA
LOCAL FLOOD PROTECTION
STAGE V, PHASE 2
HART DITCH I-WALL
ELEVATIONS AND SECTIONS

SHEET REFERENCE NUMBER:
S-06
SHEET 82 OF 138

PLOT DATE: 8/6/2007
FILENAME: D:\working\sm24959\RC52-S06.dgn

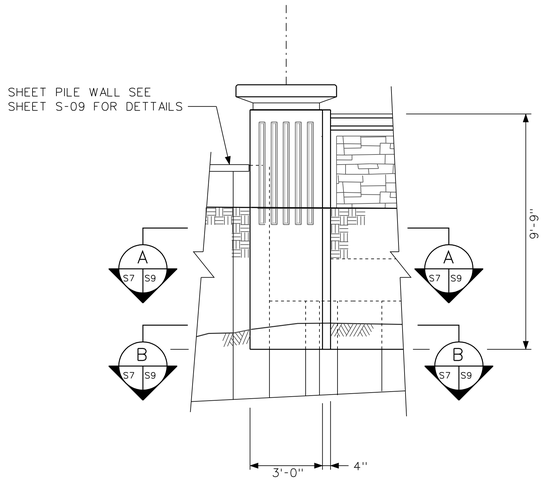

PILASTER 1 ELEVATION
SCALE: 3/8" = 1'-0"

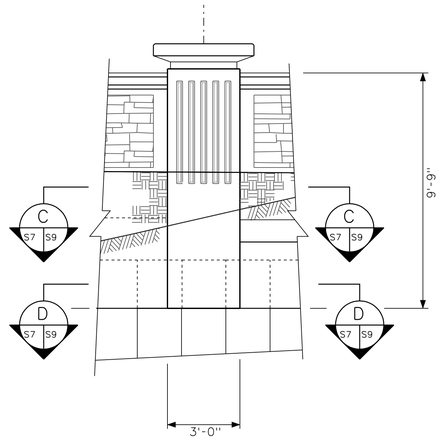

PILASTER 2 ELEVATION
SCALE: 3/8" = 1'-0"

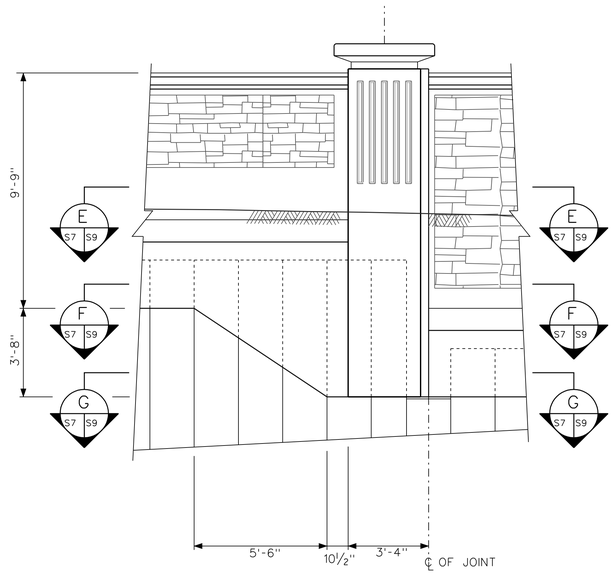

PILASTER 3 ELEVATION
SCALE: 3/8" = 1'-0"

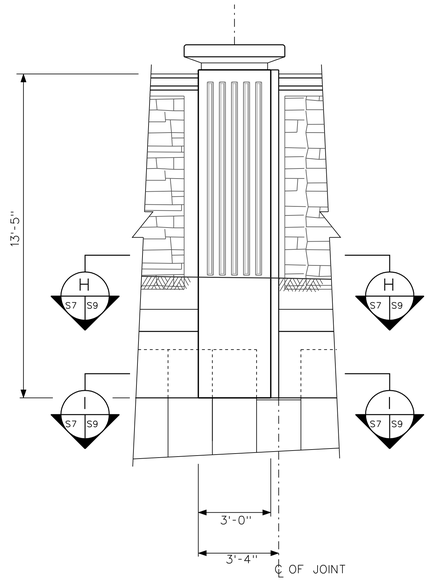

PILASTER 4 ELEVATION
SCALE: 3/8" = 1'-0"

BARING PUMP STATION I-WALL ELEVATIONS ◄► HART DITCH I-WALL ELEVATIONS

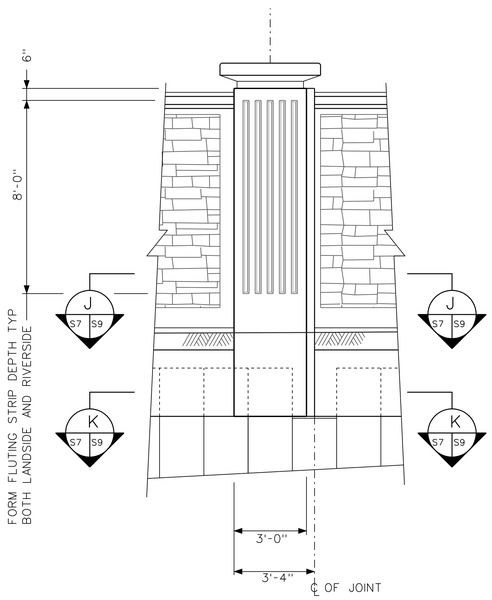

PILASTER 5 ELEVATION
SCALE: 3/8" = 1'-0"

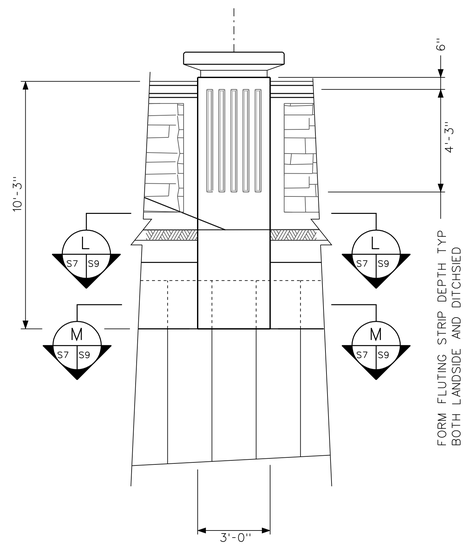

PILASTER 6 ELEVATION
SCALE: 3/8" = 1'-0"

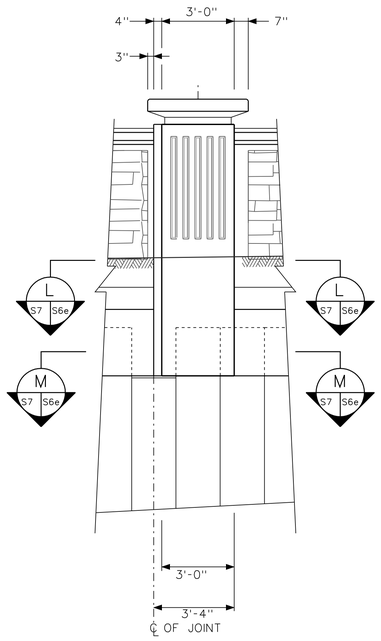

PILASTER 7 ELEVATION
SCALE: 3/8" = 1'-0"

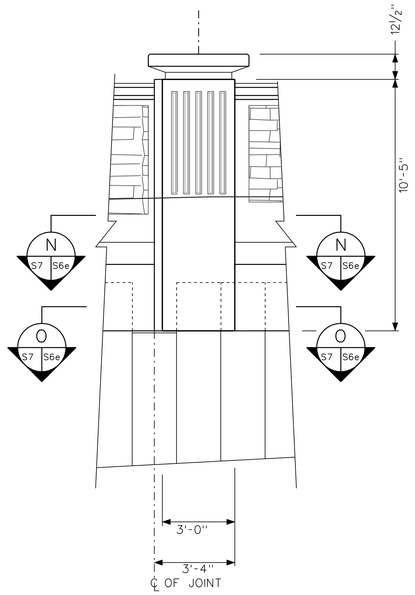

PILASTER 8 ELEVATION
SCALE: 3/8" = 1'-0"

US Army Corps of Engineers
Chicago District

SYMBOL	AMENDMENT DESCRIPTION	DATE APPROVED	SYMBOL	DESCRIPTION	DATE APPROVED

DESIGNED BY: EGS
DATE: AUGUST 2007
DRAWN BY: EGS
SCALE: AS SHOWN
CHECKED BY: JJS
SOLICITATION NUMBER: W912P8-07-B-0006
SUBMITTED BY: STEVE TREHARNE
DATE:

U.S. ARMY ENGINEER DISTRICT
CORPS OF ENGINEERS
CHICAGO, ILLINOIS

LITTLE CALUMET RIVER, INDIANA
LOCAL FLOOD PROTECTION
STAGE V, PHASE 2
BARING PUMP STATION
AND HART DITCH I-WALL
PILASTER ELEVATIONS

SHEET REFERENCE NUMBER:
S-07
SHEET 83 OF 138

PLOT DATE: 8/6/2007
FILENAME: D:\working\ams24959\LRC52-S07.dgn

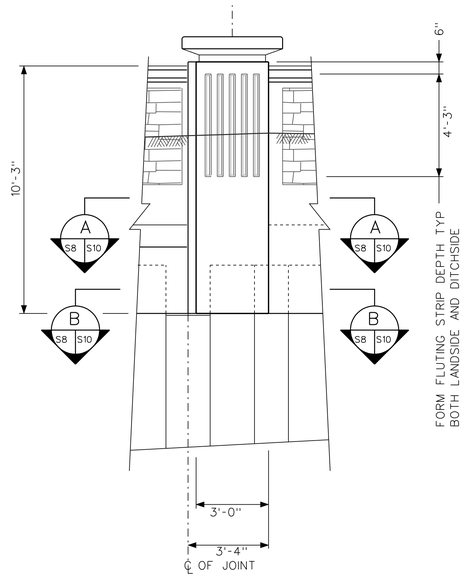

PILASTER 9 ELEVATION
SCALE: 3/8" = 1'-0"

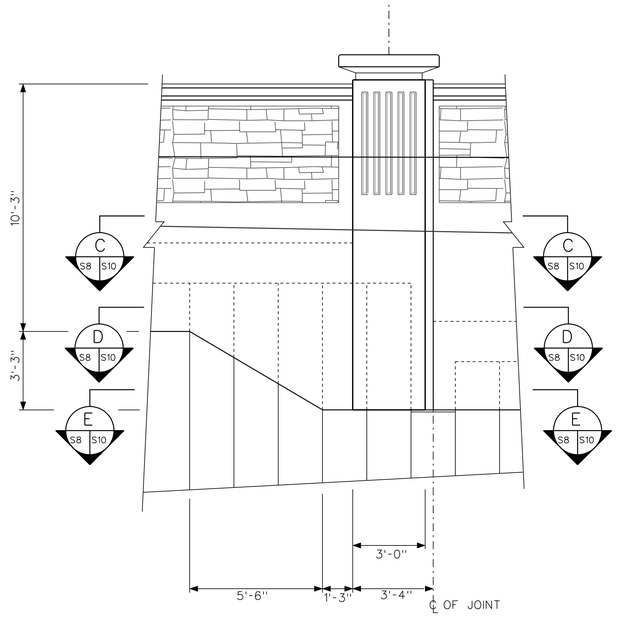

PILASTER 10 ELEVATION
SCALE: 3/8" = 1'-0"

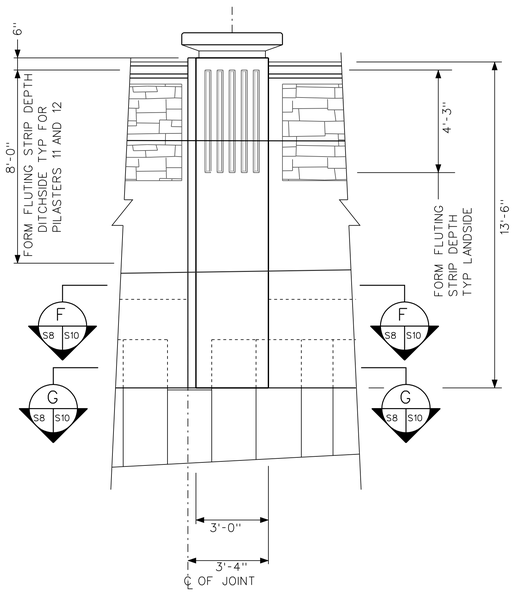

PILASTER 11 ELEVATION
SCALE: 3/8" = 1'-0"

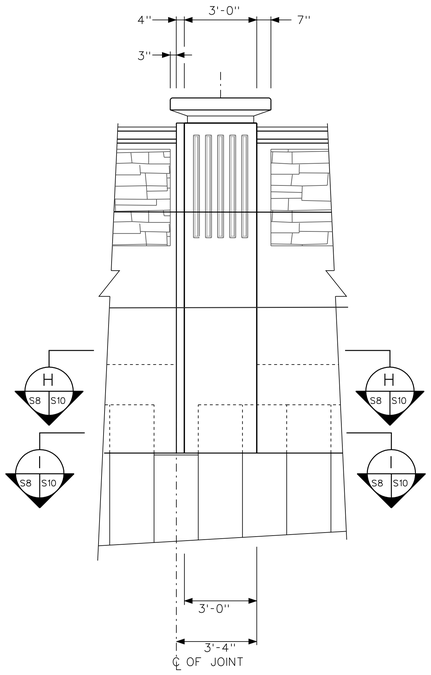

PILASTER 12 ELEVATION
SCALE: 3/8" = 1'-0"

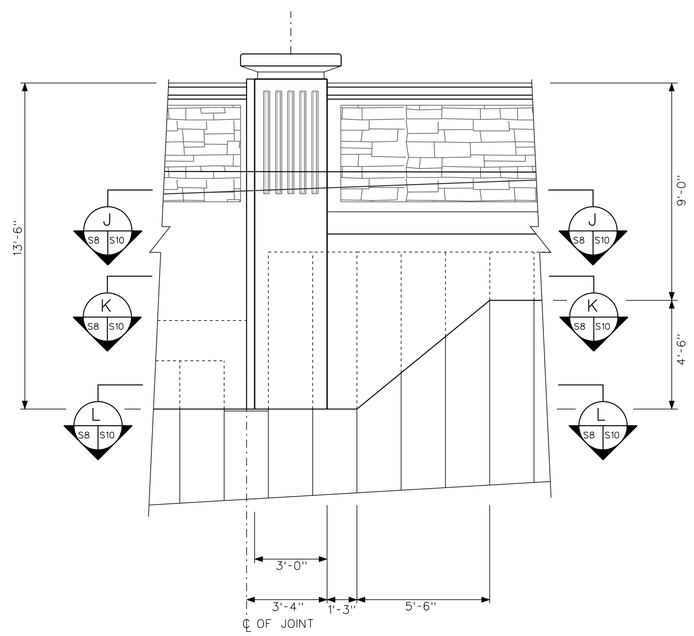

PILASTER 13 ELEVATION
SCALE: 3/8" = 1'-0"

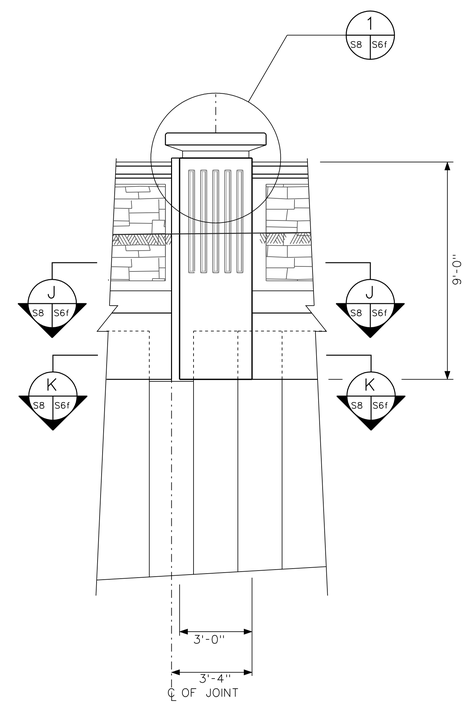

PILASTER 14 ELEVATION
SCALE: 3/8" = 1'-0"

US Army Corps of Engineers
Chicago District

SYMBOL	AMENDMENT DESCRIPTION	DATE APPROVED	SYMBOL	DESCRIPTION	DATE APPROVED

DESIGNED BY: EGS
DATE: AUGUST 2007
DRAWN BY: EGS
SCALE: AS SHOWN
CHECKED BY: JJS
SOLICITATION NUMBER: W912P8-07-B-0006
SUBMITTED BY: STEVE TREHARNE
DATE:

U.S. ARMY ENGINEER DISTRICT
CORPS OF ENGINEERS
CHICAGO, ILLINOIS

LITTLE CALUMET RIVER, INDIANA
LOCAL FLOOD PROTECTION
STAGE V, PHASE 2

HART DITCH I-WALL
PILASTER ELEVATIONS

SHEET REFERENCE NUMBER:
S-08

SHEET 84 OF 138

PLOT DATE: 8/8/2007
FILENAME: D:\working\pms24959\LRC52-S08.dgn

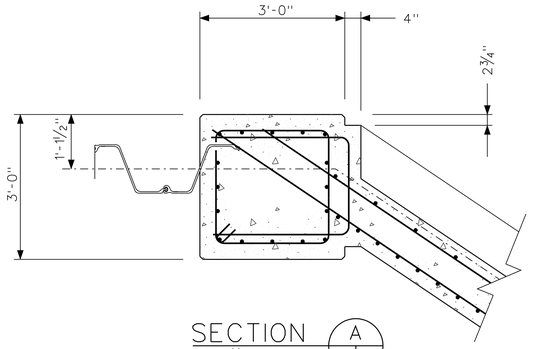

SECTION A
SCALE: ½" = 1'-0"
S8 S9

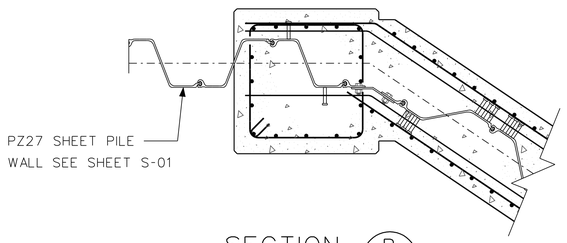

SECTION B
SCALE: ½" = 1'-0"
S8 S9

PILASTER 1 SECTIONS

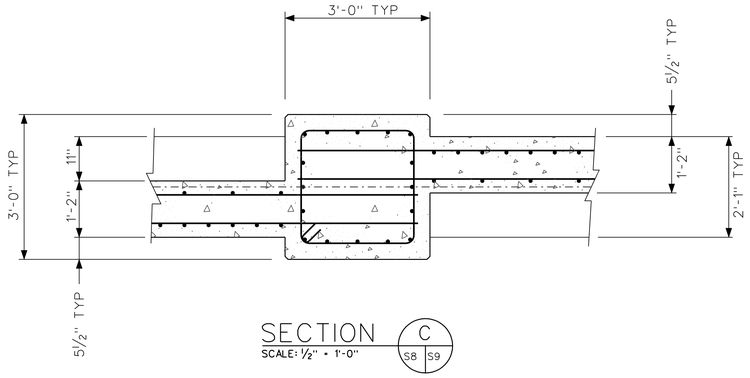

SECTION C
SCALE: ½" = 1'-0"
S8 S9

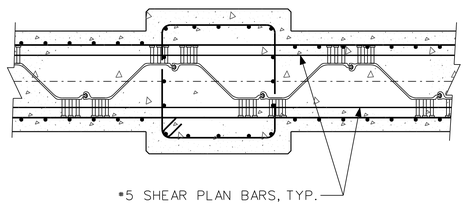

SECTION D
SCALE: ½" = 1'-0"
S8 S9

PILASTER 2 SECTIONS

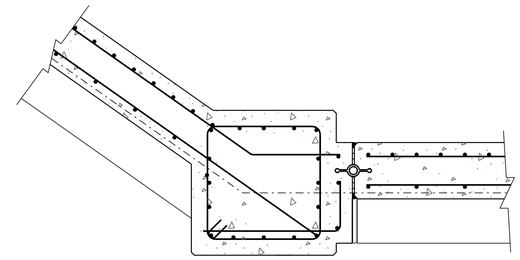

SECTION E
SCALE: ½" = 1'-0"
S8 S9

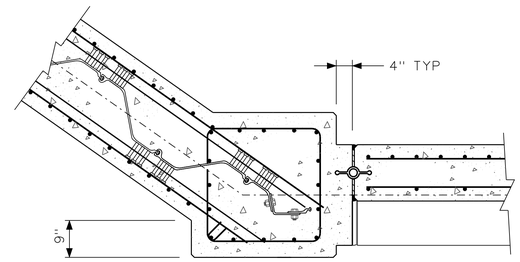

SECTION F
SCALE: ½" = 1'-0"
S8 S9

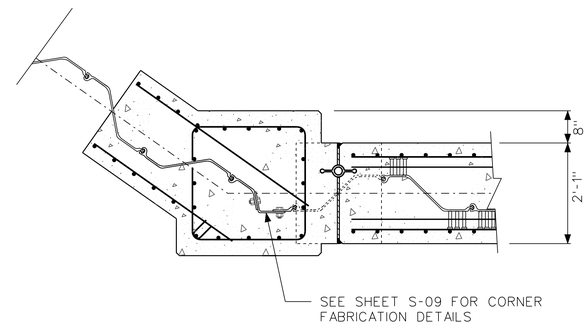

SECTION G
SCALE: ½" = 1'-0"
S8 S9

PILASTER 3 SECTIONS

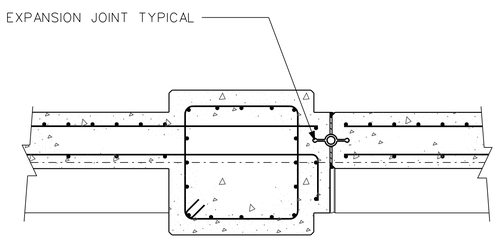

SECTION H J
SCALE: ½" = 1'-0"
S8 S9 S8 S9

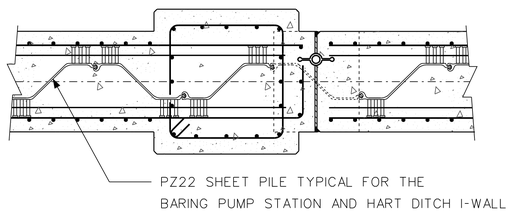

SECTION I K
SCALE: ½" = 1'-0"
S8 S9 S8 S9

PILASTER 4 AND 5 SECTIONS

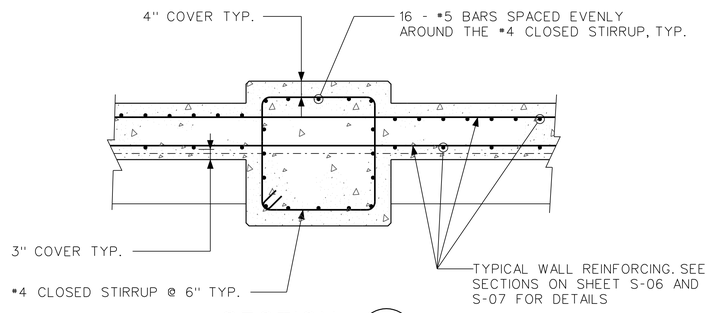

SECTION L
SCALE: ½" = 1'-0"
S8 S9

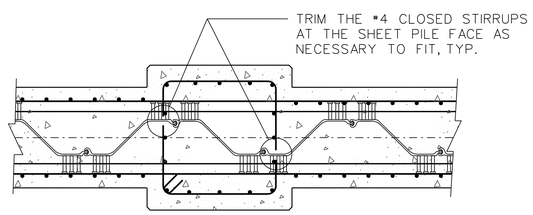

SECTION M
SCALE: ½" = 1'-0"
S8 S9

PILASTER 6 SECTIONS

US Army Corps of Engineers
Chicago District

SYMBOL	AMENDMENT DESCRIPTION	DATE APPROVED	SYMBOL	DESCRIPTION	DATE APPROVED

DESIGNED BY: EGS
DATE: AUGUST 2007
DRAWN BY: EGS
SCALE: AS SHOWN
CHECKED BY: JJS
SOLICITATION NUMBER: W912P8-07-B-0006
SUBMITTED BY: STEVE TREHARNE
DATE:

U.S. ARMY ENGINEER DISTRICT
CORPS OF ENGINEERS
CHICAGO, ILLINOIS

LITTLE CALUMET RIVER, INDIANA
LOCAL FLOOD PROTECTION
STAGE V, PHASE 2
BARING PUMP STATION
AND HART DITCH I-WALL
PILASTER SECTIONS

SHEET REFERENCE NUMBER:
S-09
SHEET 85 OF 138

PLOT DATE: 8/6/2007
FILENAME: D:\working\dms24959\LRC52-S09.dgn

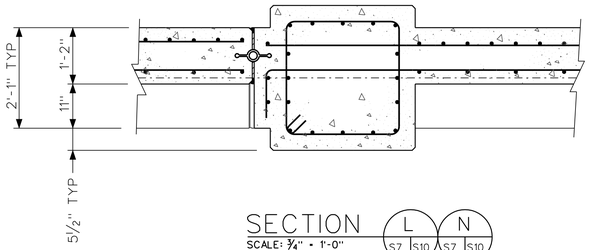

SECTION L N
SCALE: ¾" = 1'-0"
S7 S10 S7 S10

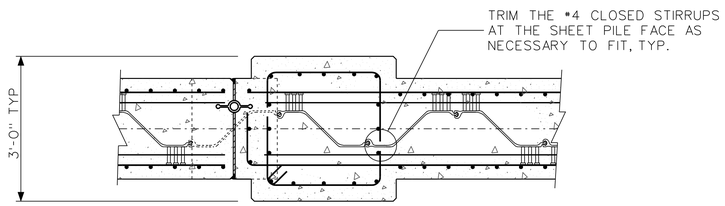

SECTION M O
SCALE: ¾" = 1'-0"
S7 S10 S7 S10

PILASTER 7 AND 8 SECTIONS

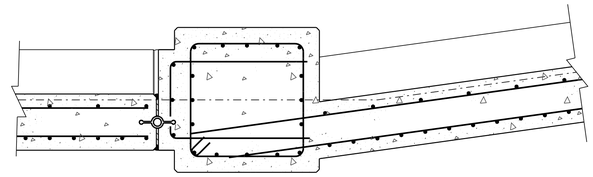

SECTION F
SCALE: ¾" = 1'-0"
S8 S10

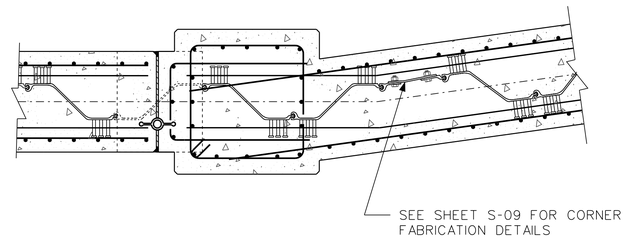

SECTION G
SCALE: ¾" = 1'-0"
S8 S10

PILASTER 11 SECTIONS

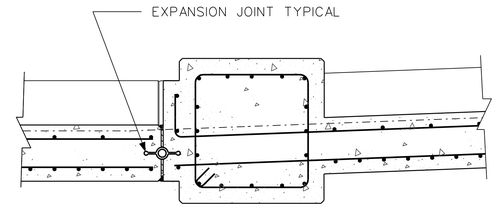

SECTION H
SCALE: ¾" = 1'-0"
S8 S10

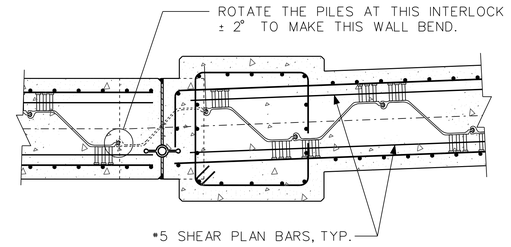

SECTION I
SCALE: ¾" = 1'-0"
S8 S10

PILASTER 12 SECTIONS

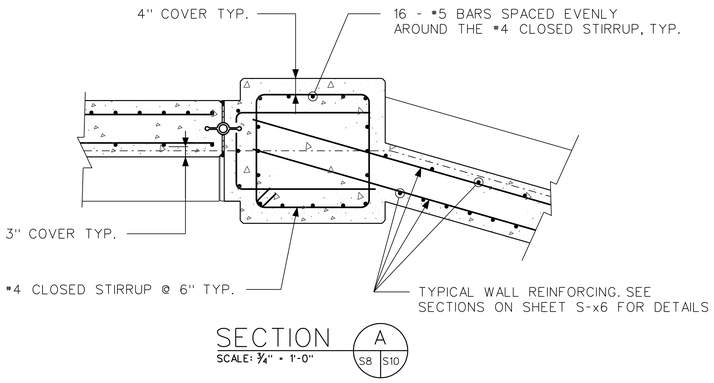

SECTION A
SCALE: ¾" = 1'-0"
S8 S10

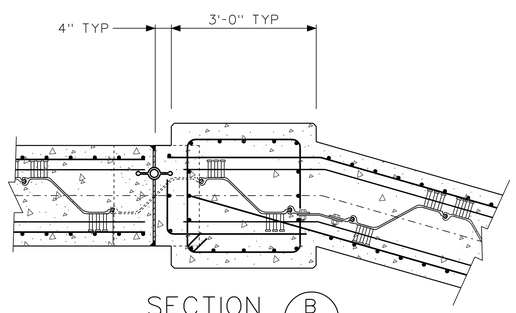

SECTION B
SCALE: ¾" = 1'-0"
S8 S10

PILASTER 9 SECTIONS

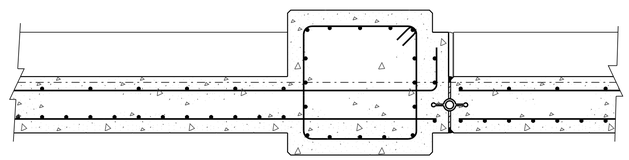

SECTION C
SCALE: ¾" = 1'-0"
S8 S10

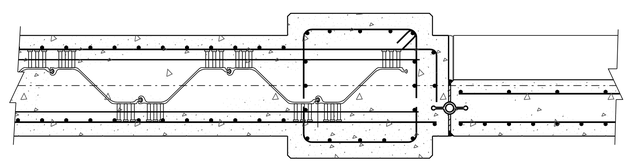

SECTION D
SCALE: ¾" = 1'-0"
S8 S10

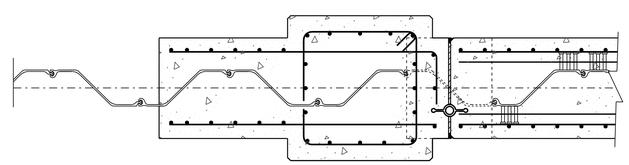

SECTION E
SCALE: ¾" = 1'-0"
S8 S10

PILASTER 10 SECTIONS

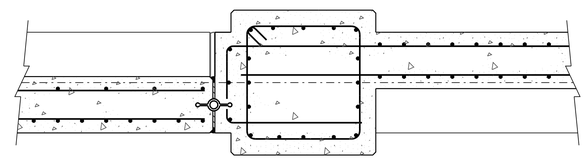

SECTION J
SCALE: ¾" = 1'-0"
S8 S10

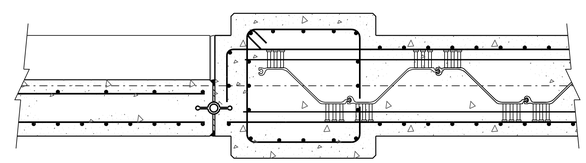

SECTION K
SCALE: ¾" = 1'-0"
S8 S10

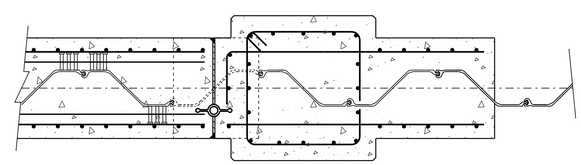

SECTION L
SCALE: ¾" = 1'-0"
S8 S10

PILASTER 13 SECTIONS

US Army Corps of Engineers
Chicago District

SYMBOL	AMENDMENT DESCRIPTION	DATE APPROVED	SYMBOL	DESCRIPTION	DATE APPROVED

DESIGNED BY: EGS
DATE: AUGUST 2007
DRAWN BY: EGS
SCALE: AS SHOWN
CHECKED BY: JJS
SOLICITATION NUMBER: W912P6-07-B-0006
SUBMITTED BY: STEVE TREHARNE
DATE:

U.S. ARMY ENGINEER DISTRICT
CORPS OF ENGINEERS
CHICAGO, ILLINOIS

LITTLE CALUMET RIVER, INDIANA
LOCAL FLOOD PROTECTION
STAGE V, PHASE 2

HART DITCH I-WALL
PILASTER SECTIONS

SHEET REFERENCE NUMBER:
S-10

PLOT DATE: $DATE$
FILENAME: $FILENAME$

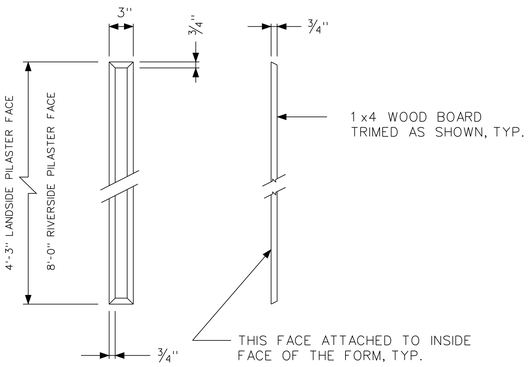

SEE SHEET S-6b FOR FURHTER DETAILS

FLUTING STRIP DETAIL (3 / S×9 | S×9)

NTS

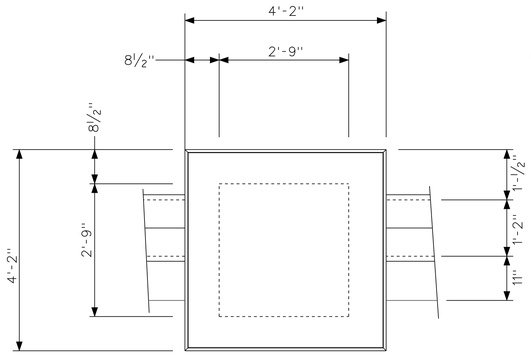

PILASTER PLAN

SCALE: 3/4" = 1'-0"

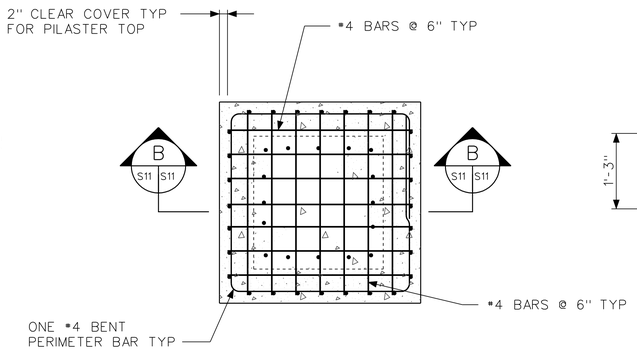

SECTION (A / S11 | S11)

SCALE: 3/4" = 1'-0"

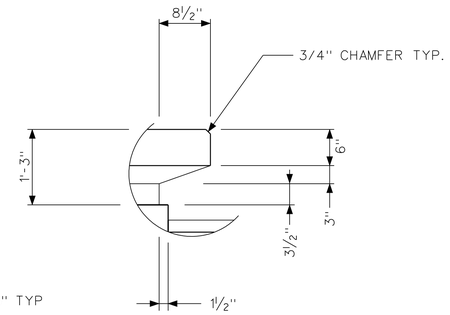

DETAIL (2 / S11 | S11)

SCALE: 3/4" = 1'-0"

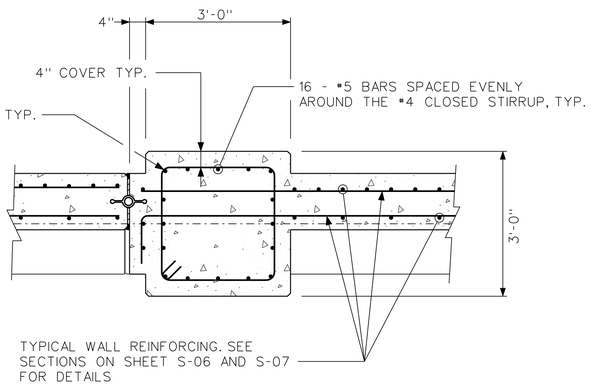

SECTION (J / S8 | S11)

SCALE: 3/4" = 1'-0"

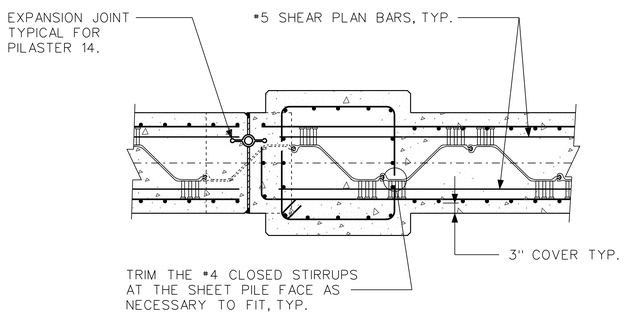

SECTION (K / S8 | S11)

SCALE: 3/4" = 1'-0"

PILASTER 14 SECTIONS

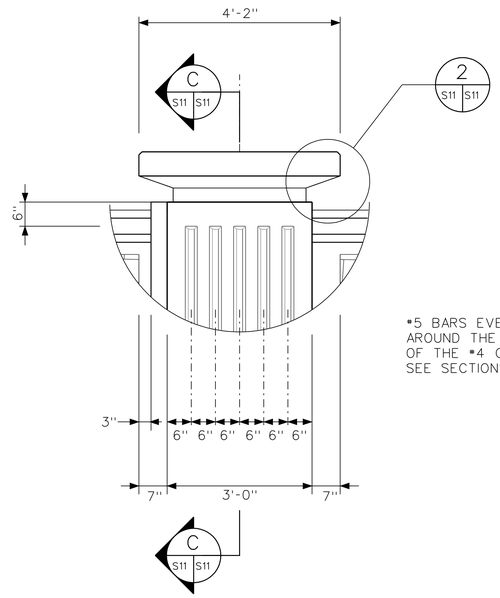

DETAIL (1 / S8 | S11)

SCALE: 3/4" = 1'-0"

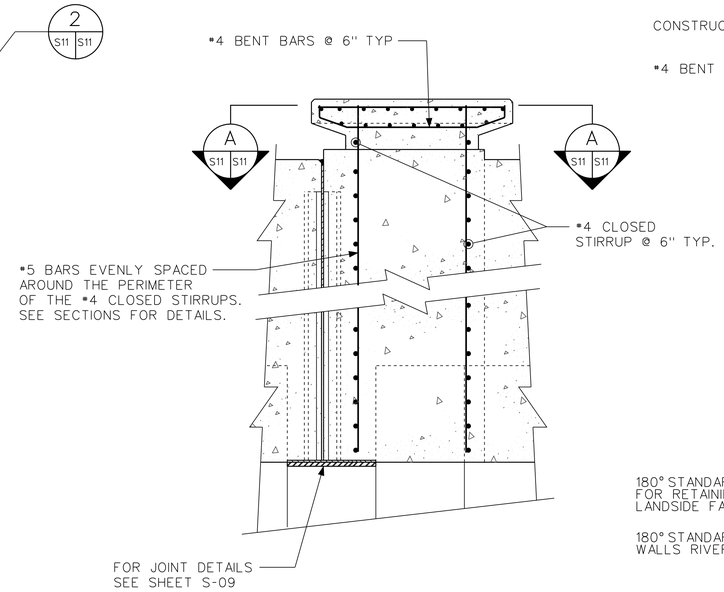

SECTION (B / S11 | S11)

SCALE: 3/4" = 1'-0"

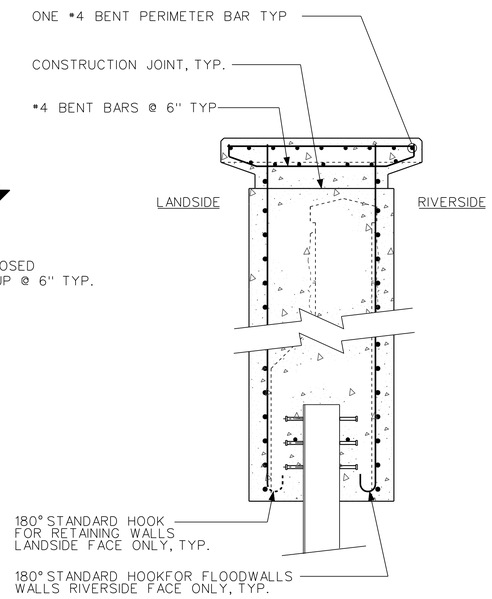

SECTION (C / S11 | S11)

SCALE: 3/4" = 1'-0"

TYPICAL BARING PUMP STATION AND HART DITCH I-WALL PILASTER DETAILS

US Army Corps of Engineers
Chicago District

SYMBOL	AMENDMENT DESCRIPTION	DATE APPROVED	SYMBOL	DESCRIPTION	DATE APPROVED

DESIGNED BY: EGS
DATE: AUGUST 2007
DRAWN BY: EGS
SCALE: AS SHOWN
CHECKED BY: JJS
SOLICITATION NUMBER: W912P8-07-B-0006
STEVE TRECHARNE
SUBMITTED BY:
DATE:

U.S. ARMY ENGINEER DISTRICT
CORPS OF ENGINEERS
CHICAGO, ILLINOIS

LITTLE CALUMET RIVER, INDIANA
LOCAL FLOOD PROTECTION
STAGE V, PHASE 2

BARING PUMP STATION AND
HART DITCH I-WALL
PILASTER SECTION AND DETAILS

SHEET REFERENCE NUMBER:
S-11

PLOT DATE: $DATE$
FILENAME: $FILENAME$

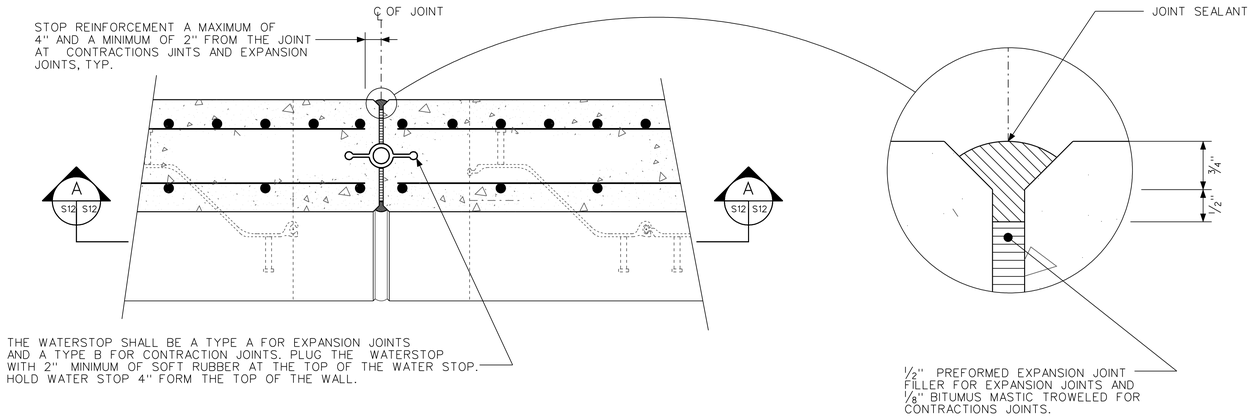

SECTION C (S12 S12)
SCALE: 1 1/2" = 1'-0"

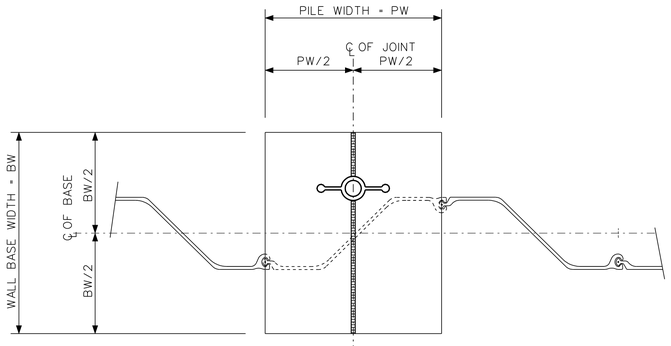

SECTION B (S12 S12)
SCALE: 1 1/2" = 1'-0"

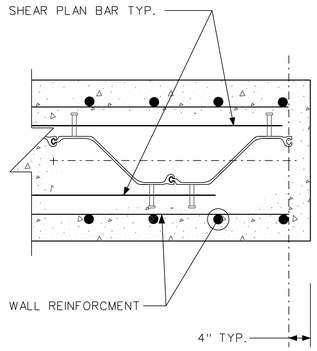

TYPICAL I-WALL END DETAIL B (S8 S9)
NTS

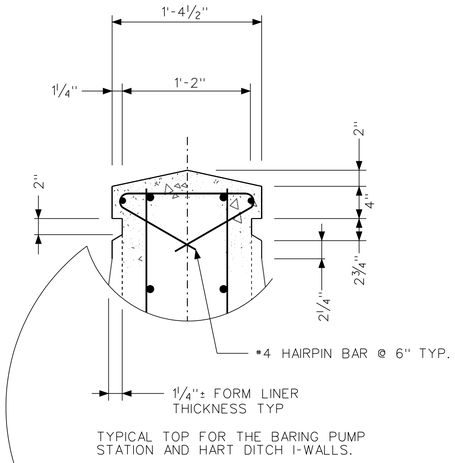

TYPICAL TOP FOR THE BARING PUMP STATION AND HART DITCH I-WALLS.

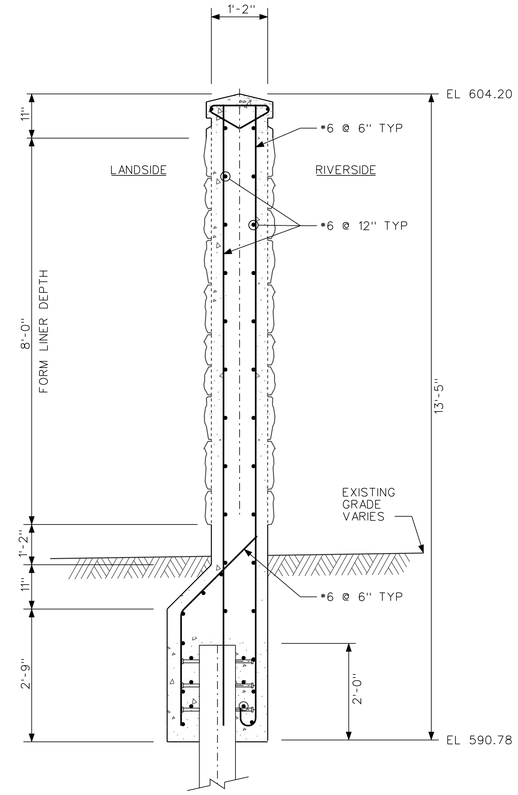

TYPICAL SECTION STATIONS 3+13.85 TO 6+53

SECTION C (S2 S12)
SCALE: 1/2" = 1'-0"

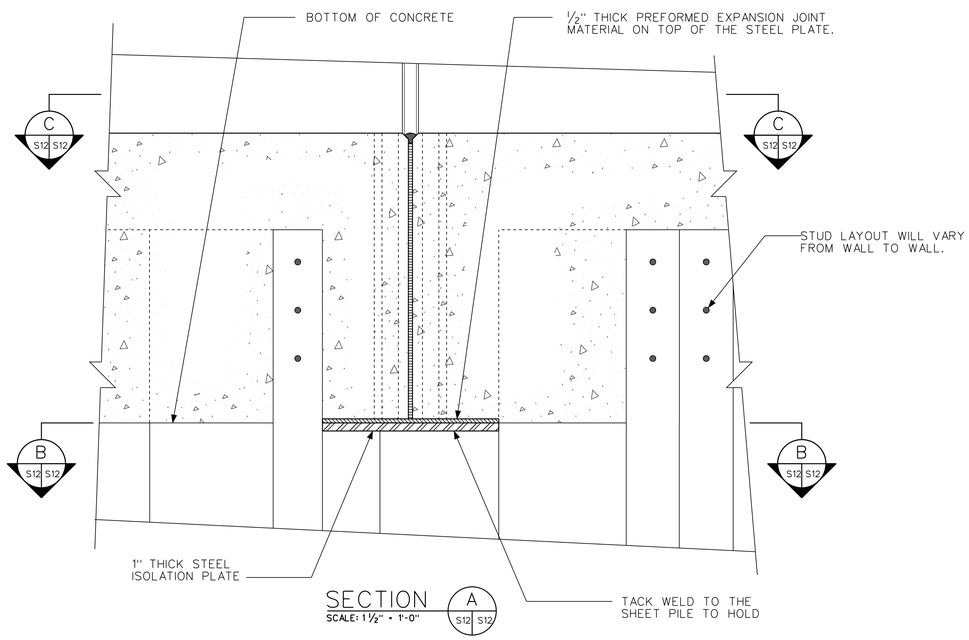

SECTION A (S12 S12)
SCALE: 1 1/2" = 1'-0"

TYPICAL EXPANSION/CONTRACTION JOINT DETAILS
SCALE: 1 1/2" = 1'-0"

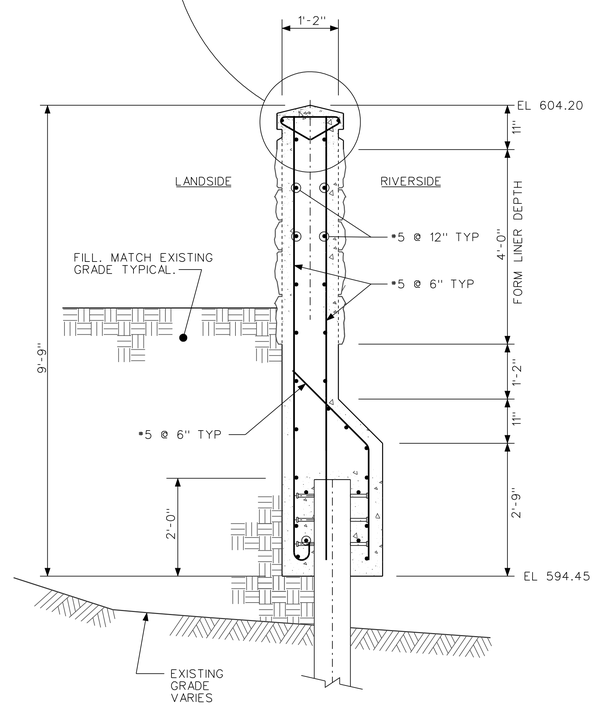

TYPICAL SECTION STATIONS 2+34 TO 2+74.33

SECTION A (S1 S12)
SCALE: 1/2" = 1'-0"

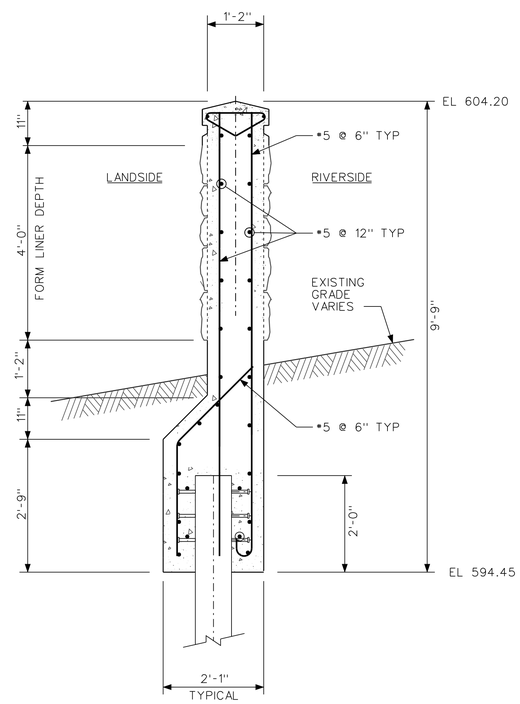

TYPICAL SECTION STATIONS 2+74.33 TO 3+13.85

SECTION B (S1 S12)
SCALE: 1/2" = 1'-0"

US Army Corps of Engineers
Chicago District

SYMBOL	AMENDMENT DESCRIPTION	DATE APPROVED	SYMBOL	DESCRIPTION	DATE APPROVED

DESIGNED BY: EGS | DATE: AUGUST 2007
DRAWN BY: EGS | SCALE: AS SHOWN
CHECKED BY: JJS | SOLICITATION NUMBER: W912P8-07-B-0006
SUBMITTED BY: STEVE TRECHARNE | DATE:

U.S. ARMY ENGINEER DISTRICT
CORPS OF ENGINEERS
CHICAGO, ILLINOIS

LITTLE CALUMET RIVER, INDIANA
LOCAL FLOOD PROTECTION
STAGE V, PHASE 2
I-WALL SECTIONS AND TYPICAL DETAILS

SHEET REFERENCE NUMBER:
S-12
SHEET 88 OF 138

PLOT DATE: $DATE$
FILENAME: $FILENAME$

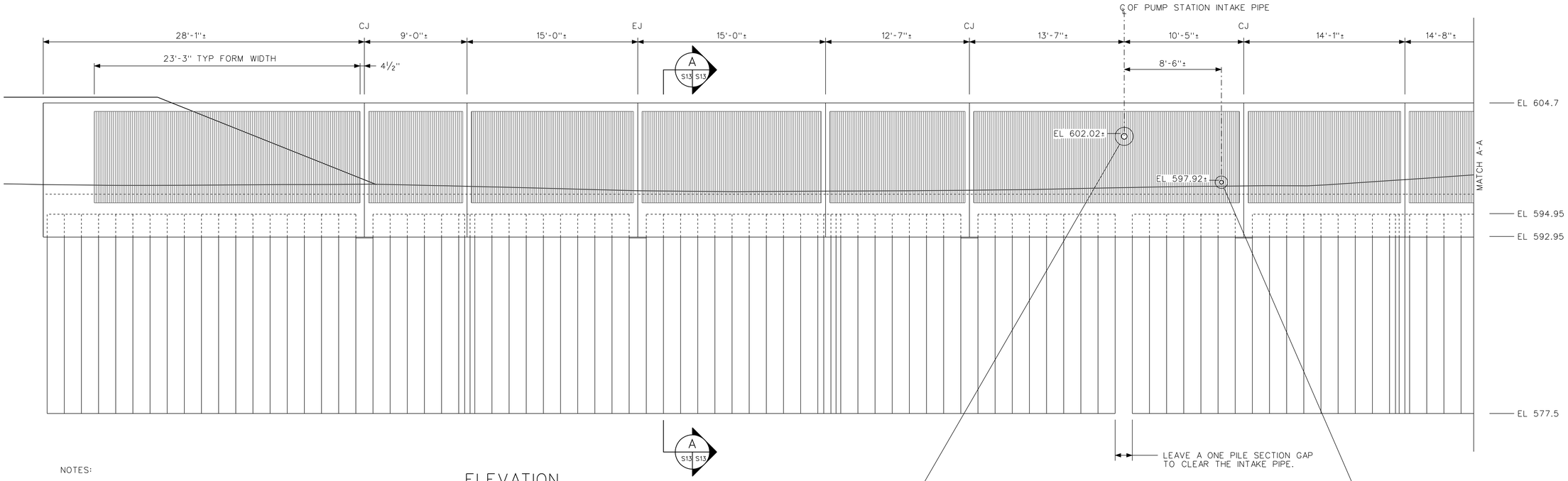

NOTES:

1. SEE SHEET C-14 FOR PLAN AND PROFILE AND SHEET C-03 FOR WALL COORDINATES.

2. SEE SHEET S-09 FOR SHEET PILE WALL CORNER DETAILS.

ELEVATION
SCALE: ½" = 1'-0"

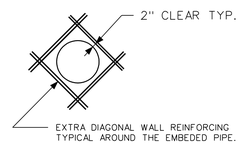

DETAIL 1
NTS
S13 S13

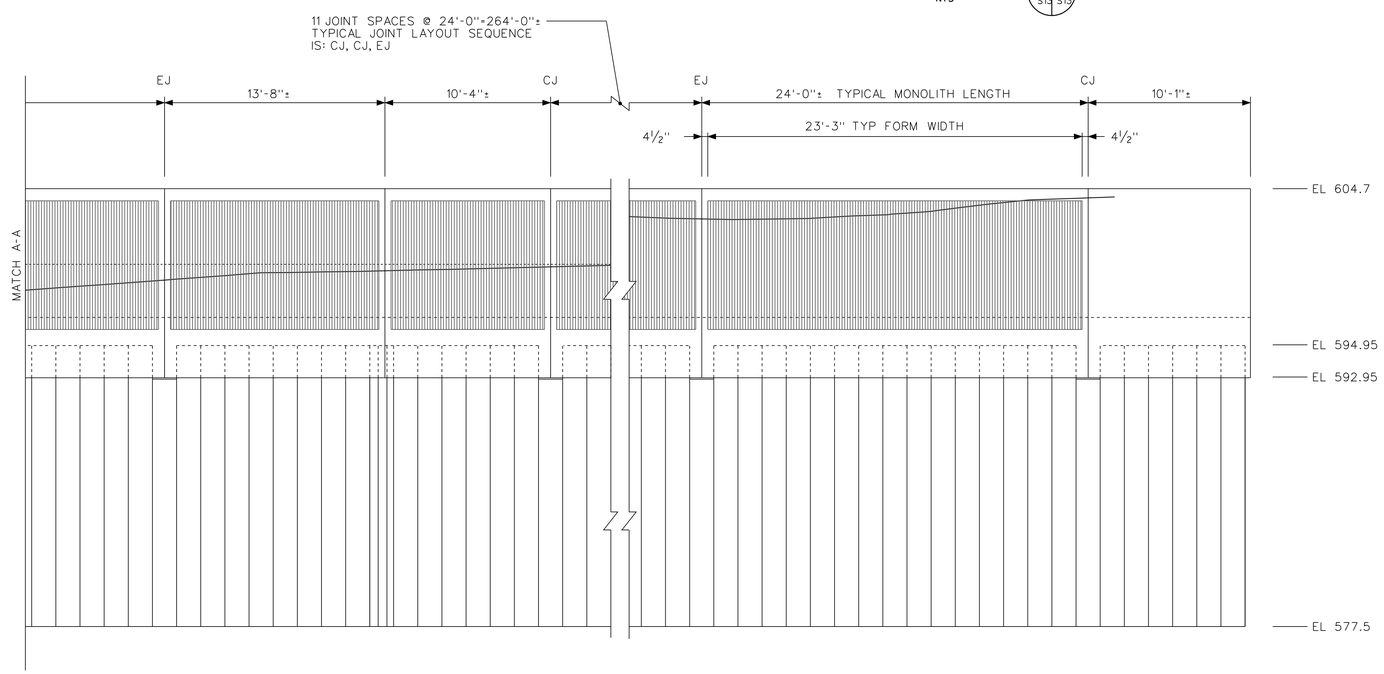

ELEVATION
SCALE: ½" = 1'-0"

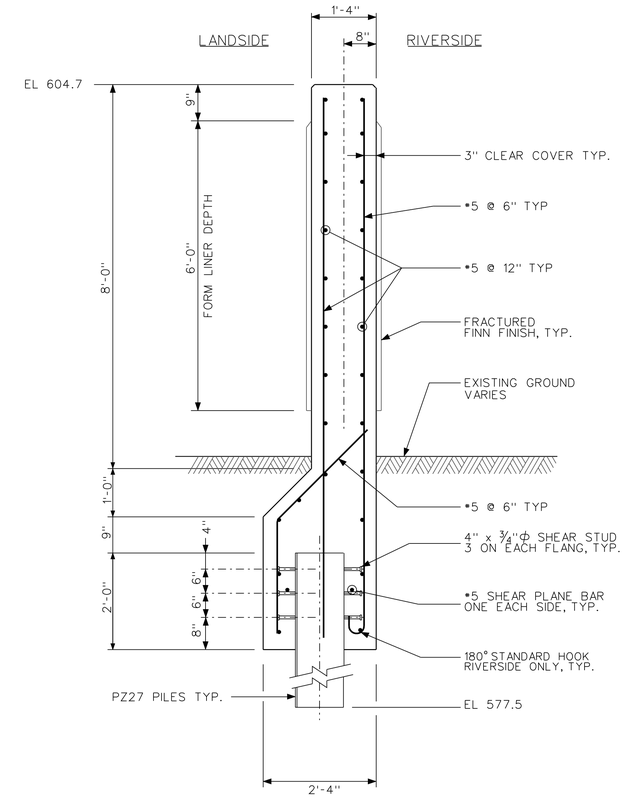

SECTION A
SCALE: ¾" = 1'-0"
S13 S13

US Army Corps of Engineers
Chicago District

SYMBOL	AMENDMENT DESCRIPTION	DATE APPROVED	SYMBOL	DESCRIPTION	DATE APPROVED

DESIGNED BY: EGS
DRAWN BY: EGS
CHECKED BY: JJS
SUBMITTED BY: STEVE TREHARNE
DATE: AUGUST 2007
SCALE: AS SHOWN
SOLICITATION NUMBER: W912P8-07-B-0006
DATE:

U.S. ARMY ENGINEER DISTRICT
CORPS OF ENGINEERS
CHICAGO, ILLINOIS

LITTLE CALUMET RIVER, INDIANA
LOCAL FLOOD PROTECTION
STAGE V, PHASE 2
WICKER PARK PUMP STATION
I-WALL
ELEVATION AND SECTION

SHEET REFERENCE NUMBER:
S-13
SHEET 89 OF 138

PLOT DATE: $DATE$
FILENAME: $FILENAME$

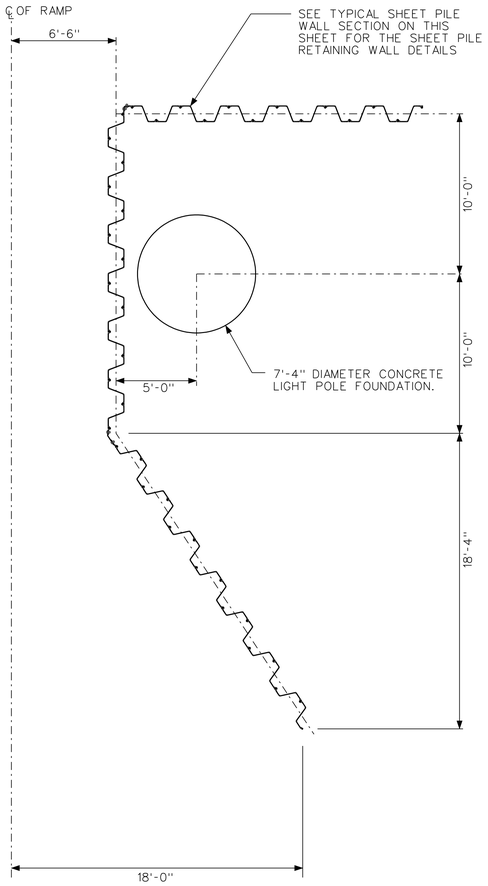

SECTION A (S14 / S14)
NTS

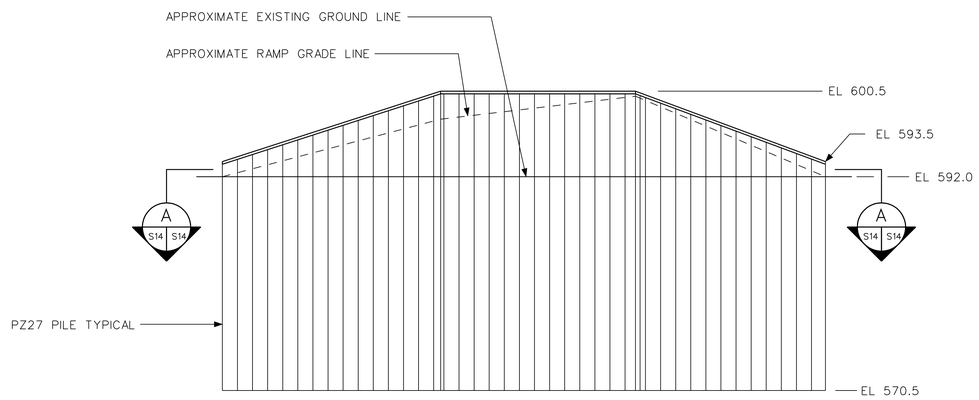

UTILITY RAMP RETAINING WALL PROFILE
NTS

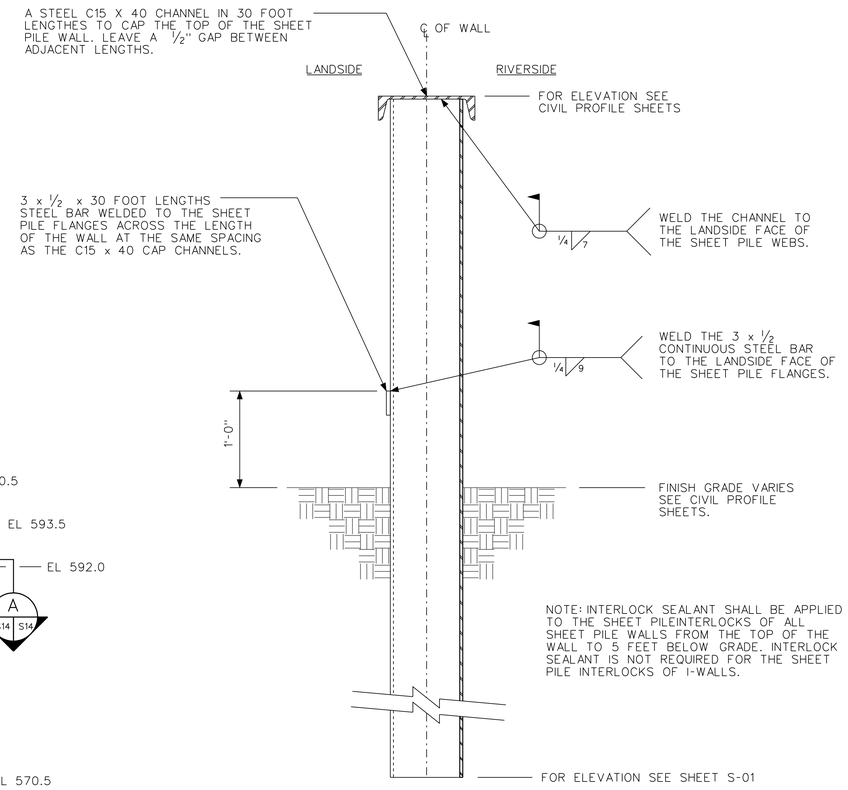

TYPICAL SHEET PILE WALL SECTION
NTS

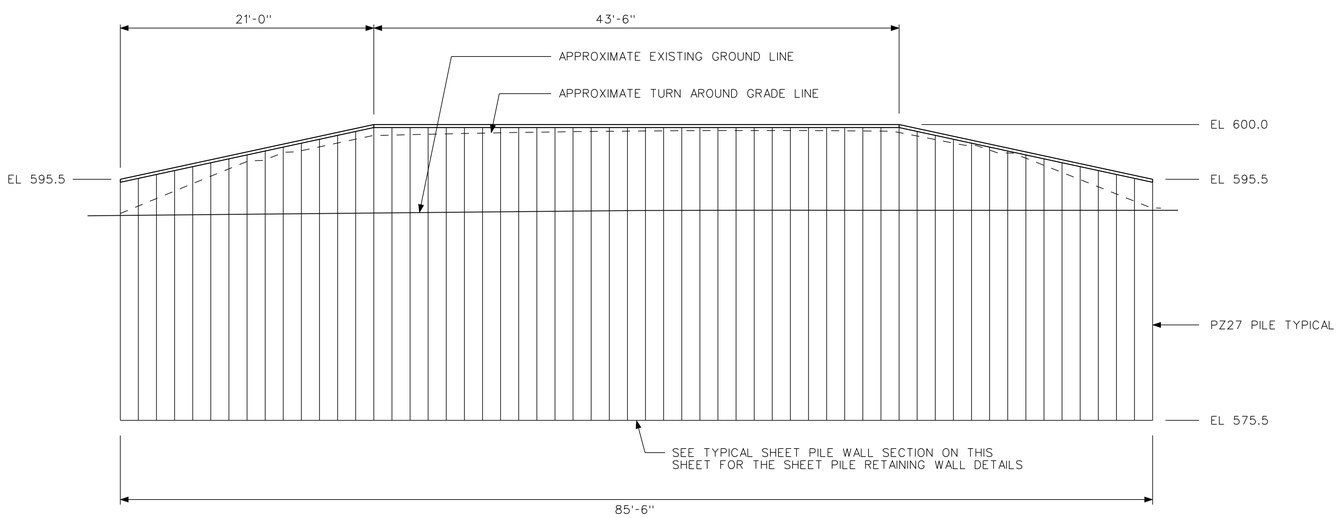

TURN AROUND RETAINING WALL PROFILE
NTS

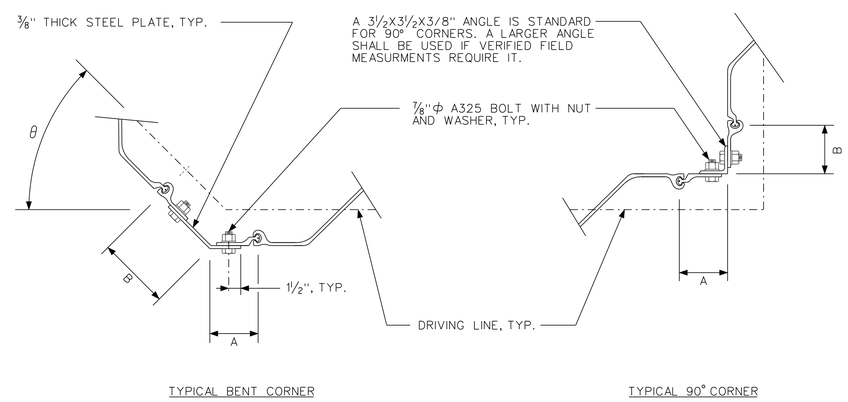

CONNECTION NOTES:

1. FIELD VERIFY ALL DIMENSIONS PRIOR TO FABRICATION.

2. THE STANDARD A AND B DIMENSION IS 6 INCHES. BOTH DIMENSIONS CAN VARY BASED ON FIELD VERIFIED DIMENSIONS WITH A MAXIMUM LENGTH OF 12 INCHES. THE A AND B DIMENSION FOR THE BENT CORNER SHALL BE DETERMINED FORM THE FIELD VERIFIED DIMENSIONS.

3. ALL FASTERNERS ARE 7/8"Φ A325 BOLTS WITH NUTS AND WASHERS SPACED AT 6 INCH ON CENTERS THROUGHOUT THE LENGTH OF THE SECTION, EXCEPT FOR 2 FEET AT EACH END WHERE THEY ARE LOCATED ON 3 INCH CENTERS.

4. SEE THE CIVIL PLAN AND PROFILE SHEETS FOR FLOOD WALL BEND COORDINATES TO CALCULATE THE BEND ANGLE θ.

TYPICAL FABRICATED SHEET PILE CORNER DETAILS
SCALE: 1 1/2" = 1'-0"

US Army Corps of Engineers
Chicago District

SYMBOL	AMENDMENT DESCRIPTION	DATE APPROVED	SYMBOL	DESCRIPTION	DATE APPROVED

DESIGNED BY: EGS | DATE: AUGUST 2007
DRAWN BY: EGS | SCALE: AS SHOWN
CHECKED BY: JJS | SOLICITATION NUMBER: W912P6-07-B-0006
SUBMITTED BY: STEVE TREHARNE | DATE:

U.S. ARMY ENGINEER DISTRICT
CORPS OF ENGINEERS
CHICAGO, ILLINOIS

LITTLE CALUMET RIVER, INDIANA
LOCAL FLOOD PROTECTION
STAGE V, PHASE 2
TYPICAL SHEET PILE CORNER AND WALL DETAILS

SHEET REFERENCE NUMBER:
S-14
SHEET 90 OF 138

PLOT DATE: $DATE$
FILENAME: $FILENAME$

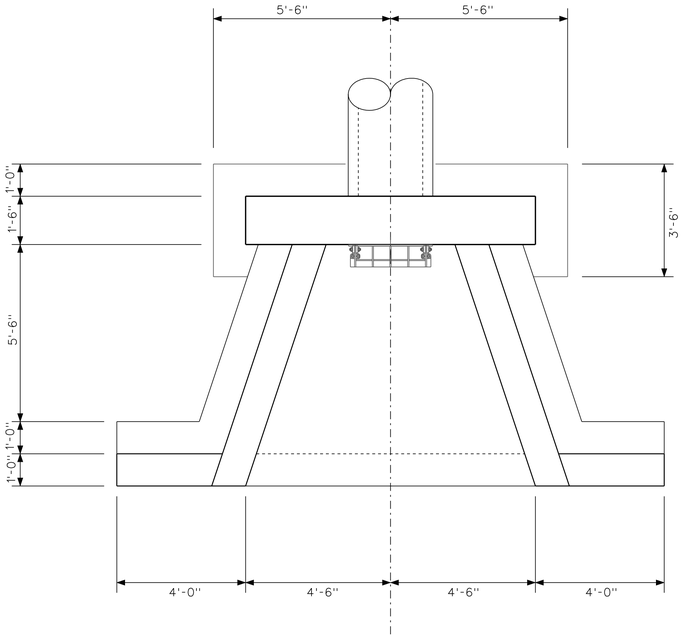

PLAN
SCALE: 1/2" = 1'-0"

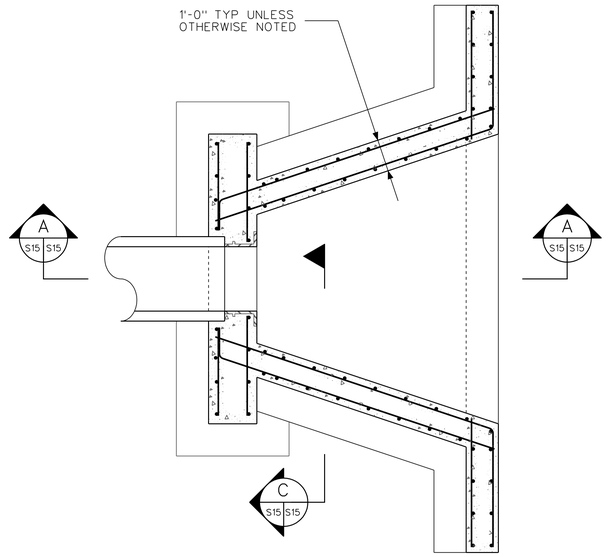

NOTE: ALL HEADWALL REINFORCING IS #5 @ 12" UNLESS OTHERWISE NOTED

SECTION B
SCALE: 1/2" = 1'-0"
S15 S15

NOTES:

1. ALL REINFORCING CLEAR COVER SHALL BE 2" TYP ON MEMBERS 12" THICK OR LESS AND SHALL BE 3" TYP ON MEMBERS GREATER THAN 12" THICK UNLESS OTHERWISE NOTED.

2. SEE SHEETS C-18, C-19, C-20 FOR SYSTEM PROFILES.

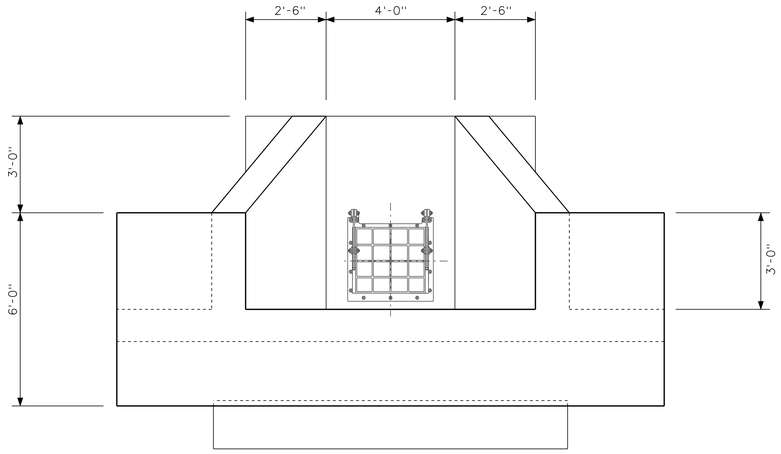

ELEVATION
SCALE: 1/2" = 1'-0"

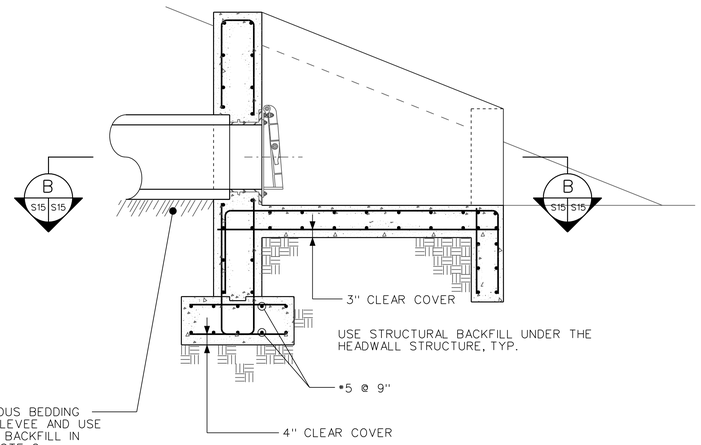

SECTION A
SCALE: 1/2" = 1'-0"
S15 S15

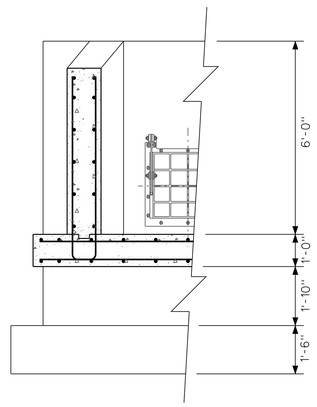

SECTION C
SCALE: 1/2" = 1'-0"
S15 S15

12 0 1 2 3 4 5
SCALE: 1/2" = 1'-0"

12 0 1 2 3 4 5
SCALE: 1/2" = 1'-0"

US Army Corps of Engineers
Chicago District

SYMBOL	AMENDMENT DESCRIPTION	DATE APPROVED	SYMBOL	DESCRIPTION	DATE APPROVED

DESIGNED BY: EGS
DATE: AUGUST 2007
DRAWN BY: EGS
SCALE: AS SHOWN
CHECKED BY: JJS
SOLICITATION NUMBER: W912P6-07-B-0006
SUBMITTED BY: STEVE TREHARNE
DATE:

U.S. ARMY ENGINEER DISTRICT
CORPS OF ENGINEERS
CHICAGO, ILLINOIS

LITTLE CALUMET RIVER, INDIANA
LOCAL FLOOD PROTECTION
STAGE V, PHASE 2

TYPICAL 24" CULVERT HEADWALL

SHEET REFERENCE NUMBER:
S-15
SHEET 91 OF 138

PLOT DATE: $DATE$
FILENAME: $FILENAME$

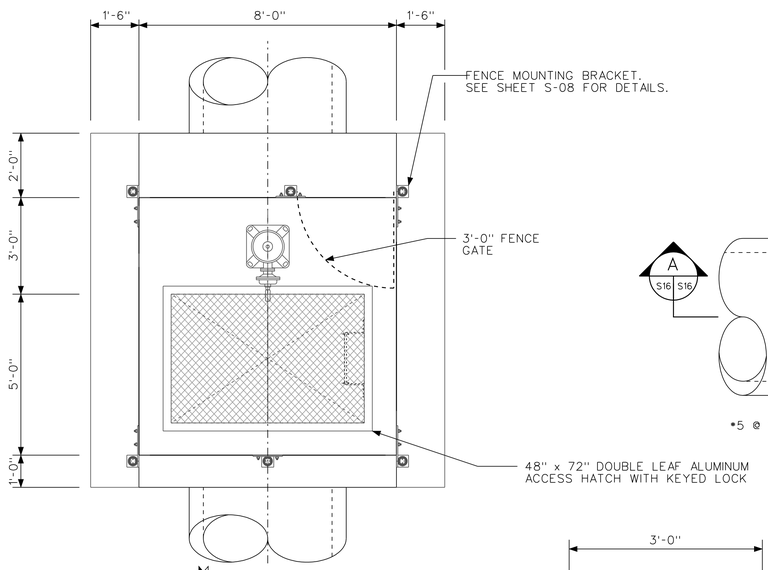

PLAN
SCALE: 1/2" = 1'-0"

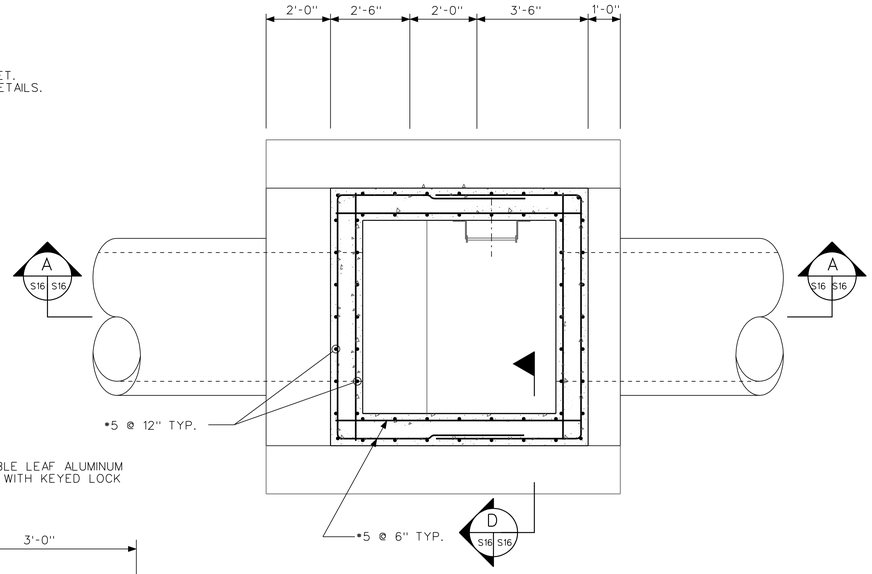

SECTION B
SCALE: 1/2" = 1'-0"

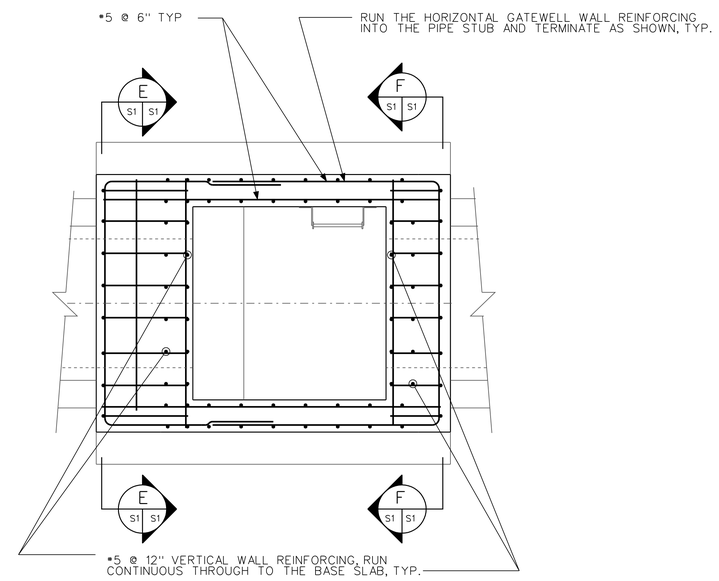

SECTION C
SCALE: 1/2" = 1'-0"

NOTES:

1. SEE SHEET M-1 FOR SLUICE GATE DETAILS.
2. SEE SHEET C-49 FOR GATEWELL PROFILE.
3. SEE SHEET S-35 FOR FENCE DETAILS.

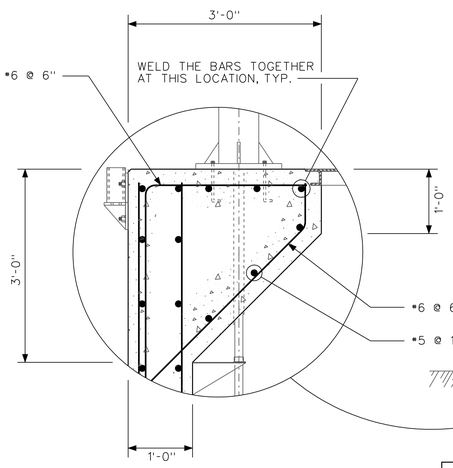

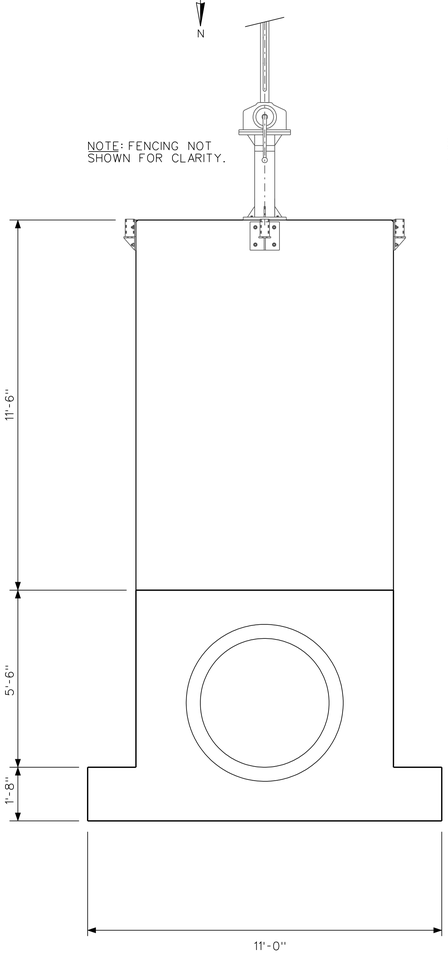

ELEVATION
SCALE: 1/2" = 1'-0"

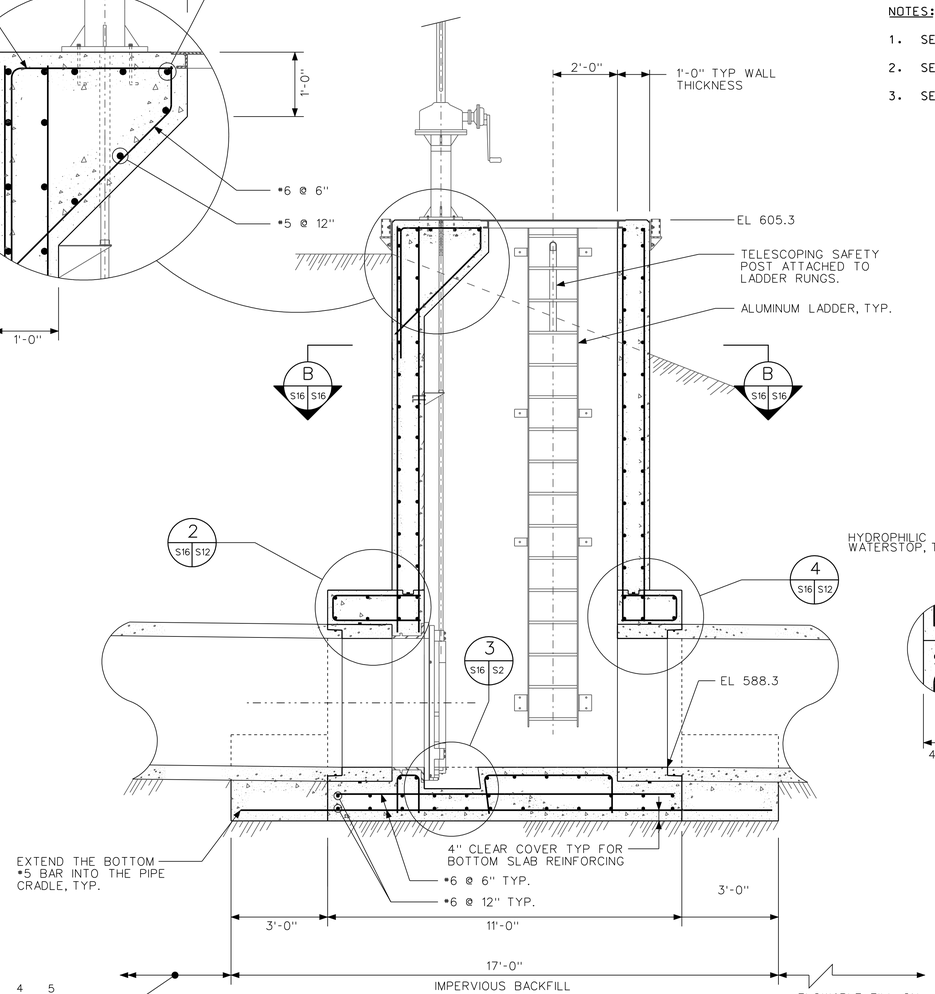

SECTION A
SCALE: 1/2" = 1'-0"

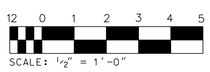

SCALE: 1/2" = 1'-0"

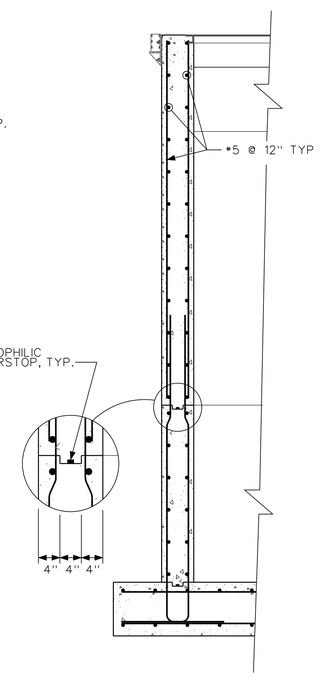

SECTION D
SCALE: 1/2" = 1'-0"

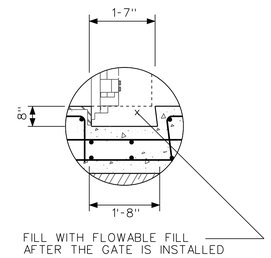

DETAIL 3
NTS

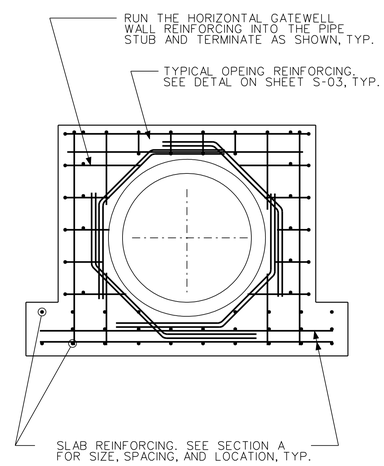

SECTION E F
SCALE: 1/2" = 1'-0"

US Army Corps of Engineers
Chicago District

SYMBOL	AMENDMENT DESCRIPTION	DATE APPROVED	SYMBOL	DESCRIPTION	DATE APPROVED

DESIGNED BY: EGS
DATE: AUGUST 2007
DRAWN BY: EGS
SCALE: AS SHOWN
CHECKED BY: JJS
SOLICITATION NUMBER: W912P6-07-B0006
SUBMITTED BY:
DATE:

U.S. ARMY ENGINEER DISTRICT
CORPS OF ENGINEERS
CHICAGO, ILLINOIS

LITTLE CALUMET RIVER, INDIANA
LOCAL FLOOD PROTECTION
STAGE V, PHASE 2
TRI-STATE 48" GATEWELL
PLAN, ELEVATION AND SECTIONS

SHEET REFERENCE NUMBER:
S-16
SHEET 92 OF 138

PLOT DATE: $DATE$
FILENAME: $FILENAME$

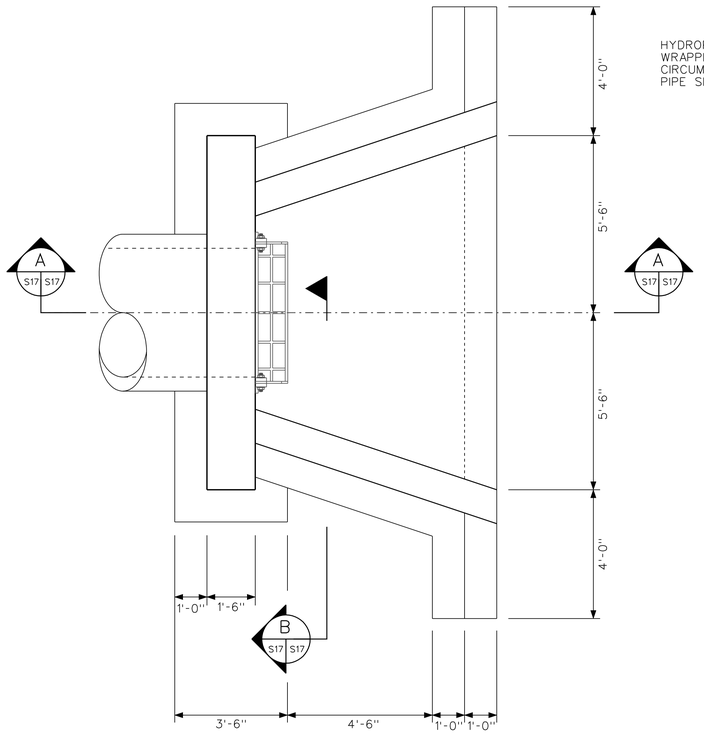

NOTE: PLAN DIMENSIONS ARE THE SAME FOR BOTH THE INLET AND OUTLET HEADWALLS.

PLAN
SCALE: 1/2" = 1'-0"

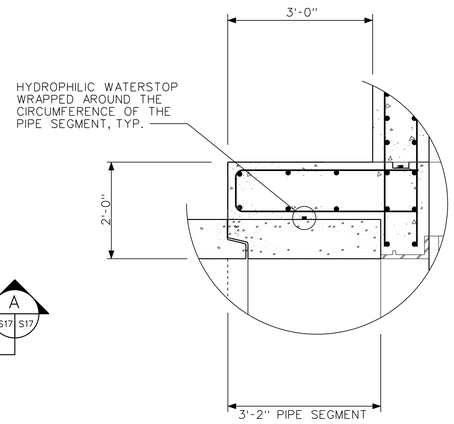

DETAIL 1 (S32 S17)
SCALE: 3/4" = 1'-0"

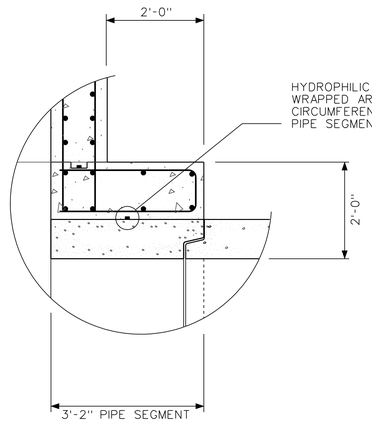

DETAIL 2 (S32 S17)
SCALE: 3/4" = 1'-0"

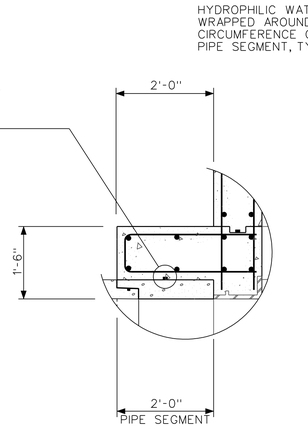

DETAIL 2 (S11 S17) 1 (S30 S17)
SCALE: 3/4" = 1'-0"

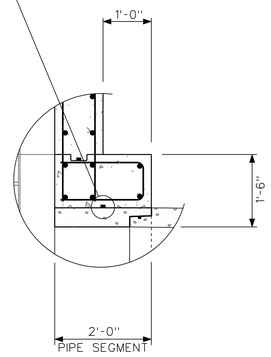

DETAIL 4 (S11 S17) 2 (S30 S17)
SCALE: 3/4" = 1'-0"

NOTES:

1. SEE SHEET M-1 FOR FLAP GATE DETAILS.

2. THE INLET SHALL BE A STANDARD PRE-CAST INLET WITH A TRASH RACK. TYPICAL.

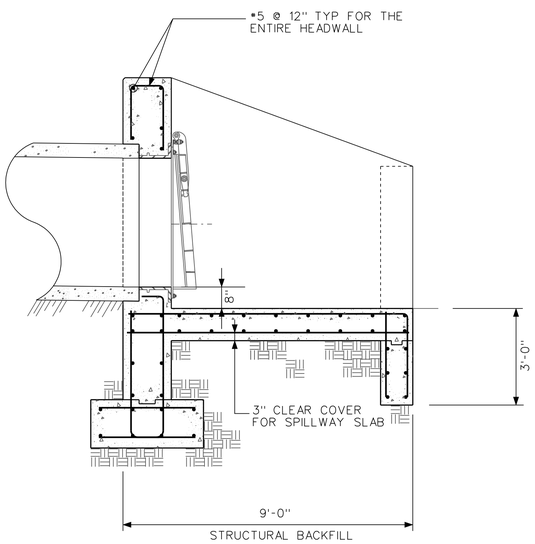

SECTION A (S17 S17)
SCALE: 1/2" = 1'-0"

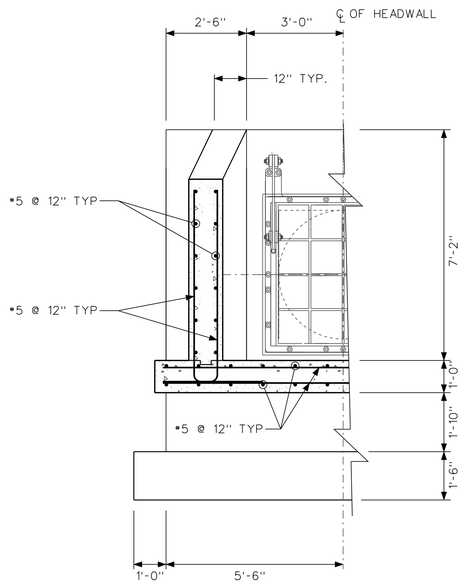

SECTION B (S17 S17)
SCALE: 1/2" = 1'-0"

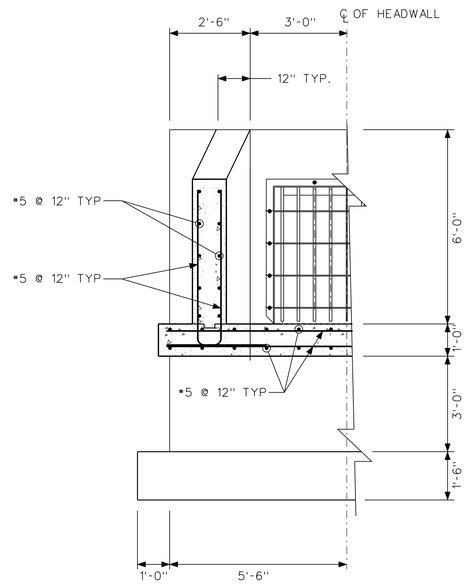

SECTION B (S17 S17)
SCALE: 1/2" = 1'-0"

SCALE: 1/2" = 1'-0"

US Army Corps of Engineers
Chicago District

SYMBOL	AMENDMENT DESCRIPTION	DATE APPROVED	SYMBOL	DESCRIPTION	DATE APPROVED

DESIGNED BY: EGS
DATE: AUGUST 2007
DRAWN BY: EGS
SCALE: AS SHOWN
CHECKED BY: JJS
SOLICITATION NUMBER: W912P6-07-B0006
SUBMITTED BY: STEVE TREHARNE
DATE:

U.S. ARMY ENGINEER DISTRICT
CORPS OF ENGINEERS
CHICAGO, ILLINOIS

LITTLE CALUMET RIVER, INDIANA
LOCAL FLOOD PROTECTION
STAGE V, PHASE 2
48" GATEWELL HEADWALLS AND MISCELLANEOUS GATEWELL DETAILS

SHEET REFERENCE NUMBER:
S-17
SHEET 93 OF 138

PLOT DATE: $DATE$
FILENAME: $FILENAME$

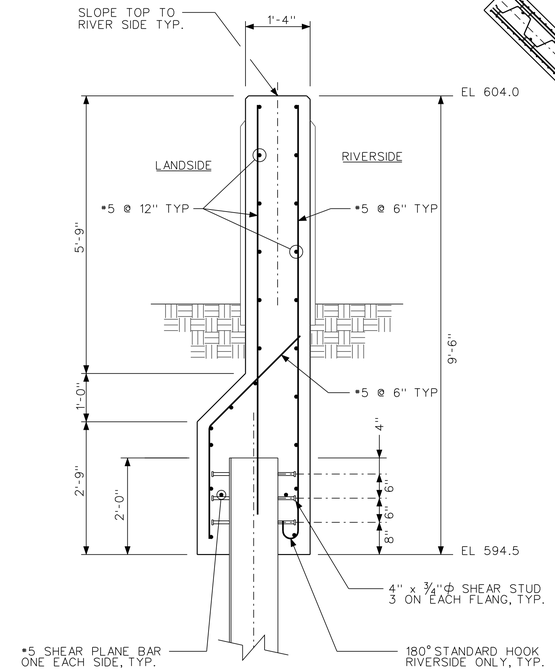

SECTION C/S18 D/S18
SCALE: ¾" = 1'-0"

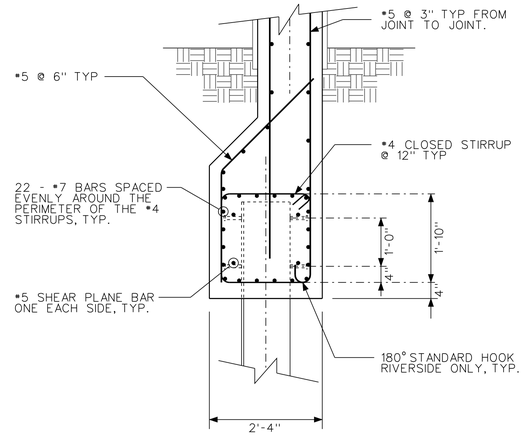

SECTION B/S18 S18
SCALE: ¾" = 1'-0"

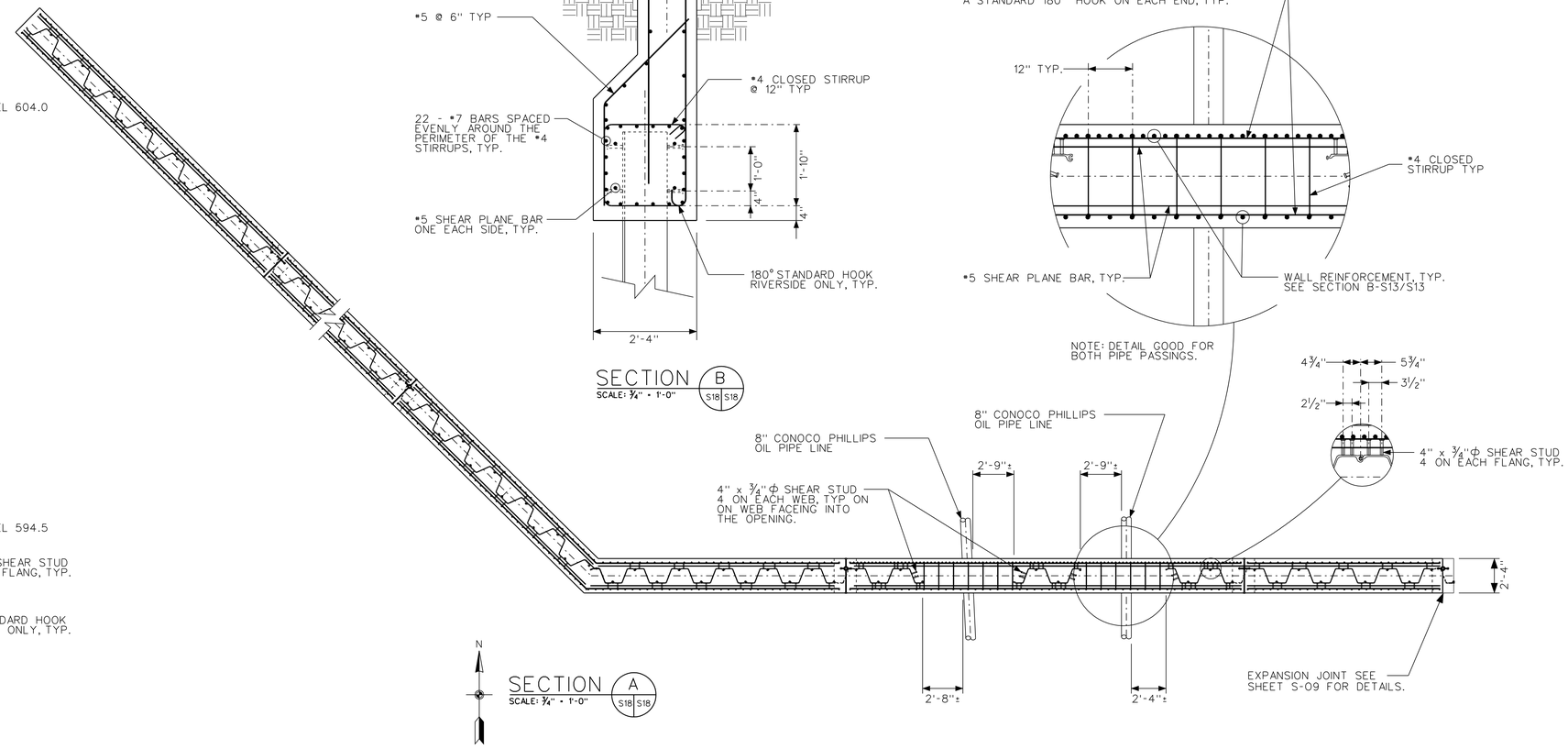

SECTION A/S18 S18
SCALE: ¾" = 1'-0"

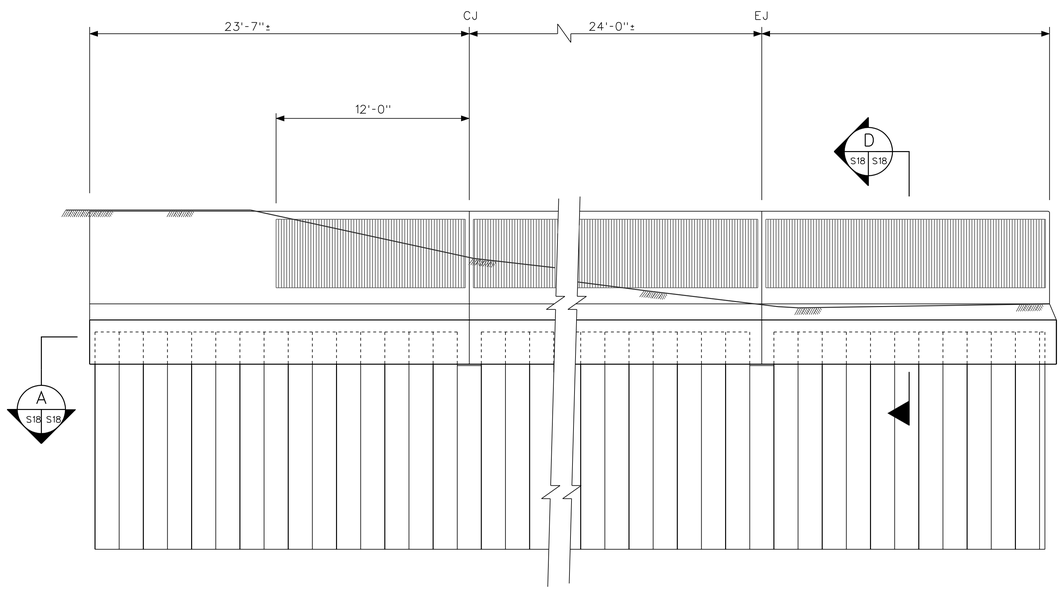

NORTHEAST ELEVATION
SCALE: ¼" = 1'-0"

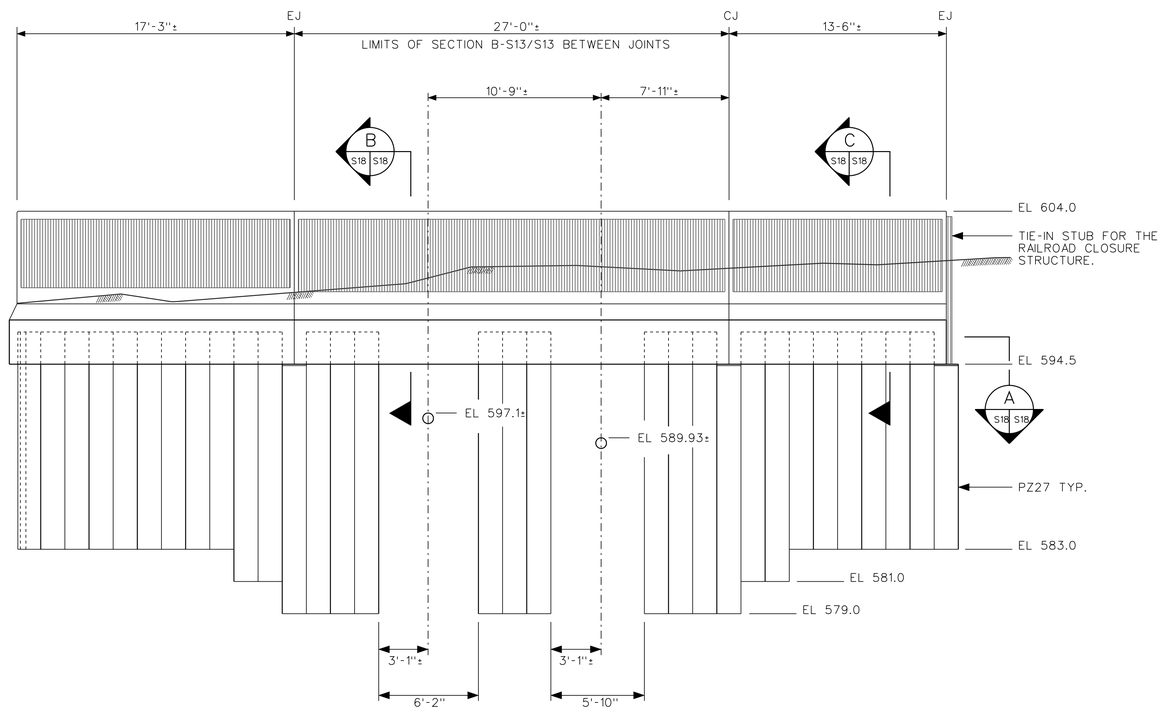

NORTH ELEVATION
SCALE: ¼" = 1'-0"

US Army Corps of Engineers
Chicago District

SYMBOL	AMENDMENT DESCRIPTION	DATE APPROVED	SYMBOL	DESCRIPTION	DATE APPROVED

DESIGNED BY: EGS
DATE: AUGUST 2007
DRAWN BY: EGS
SCALE: AS SHOWN
CHECKED BY: JJS
SOLICITATION NUMBER: W912P6-07-B-0006
SUBMITTED BY: STEVE TREHARNE
DATE:

U.S. ARMY ENGINEER DISTRICT
CORPS OF ENGINEERS
CHICAGO, ILLINOIS

LITTLE CALUMET RIVER, INDIANA
LOCAL FLOOD PROTECTION
STAGE V, PHASE 2
UTILITY CORRIDOR
SOUTHEAST SIDE
PLAN, ELEVATION AND SECTION

SHEET REFERENCE NUMBER:
S-18
SHEET 94 OF 138

PLOT DATE: $DATE$
FILENAME: $FILENAME$

NOTES:

1. SEE SHEET S-25 FOR PIPELINE NOTES.

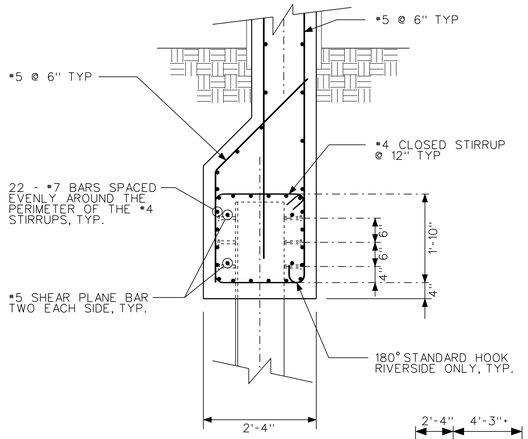

SECTION D D F
SCALE: 3/4" = 1'-0"
S19 S19 S15 S19 S15 S19

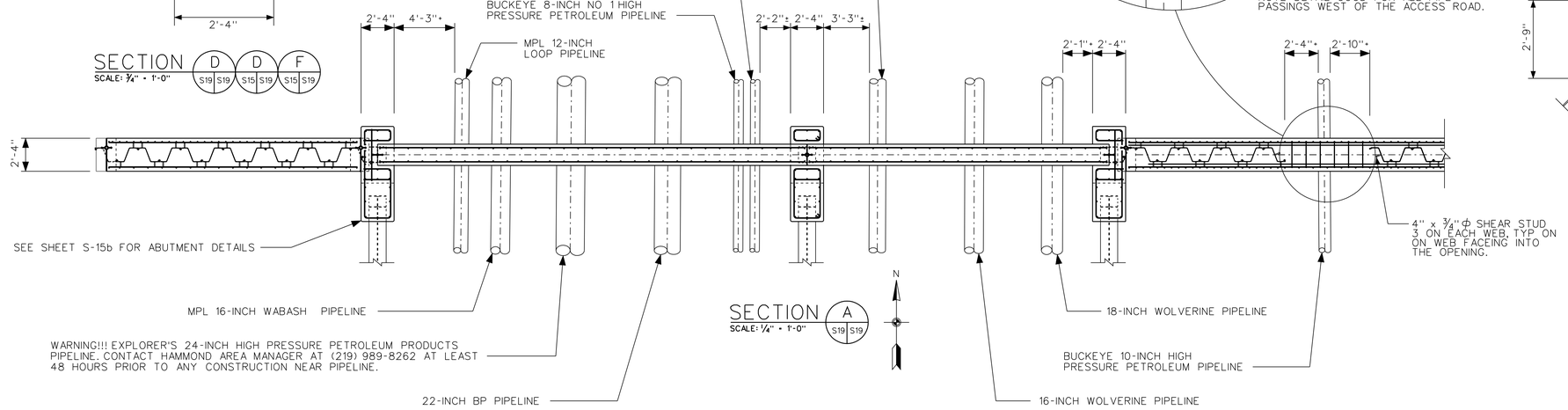

SECTION A
SCALE: 1/4" = 1'-0"
S19 S19

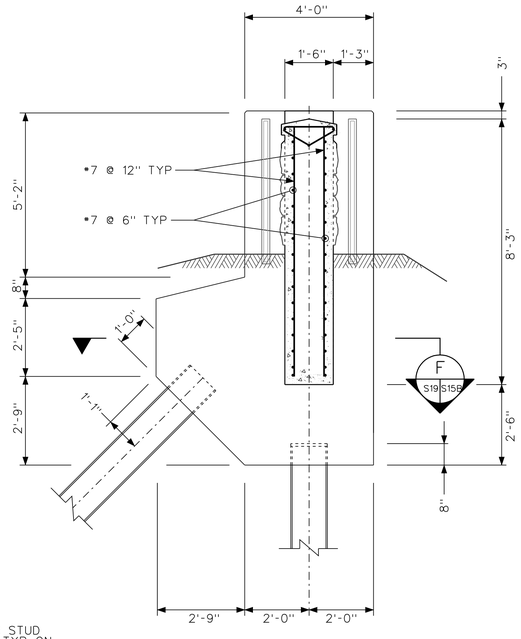

NOTE: ALL COVER 3" UNLESS OTHERWISE NOTED.

SECTION C
SCALE: 1/2" = 1'-0"
S19 S19

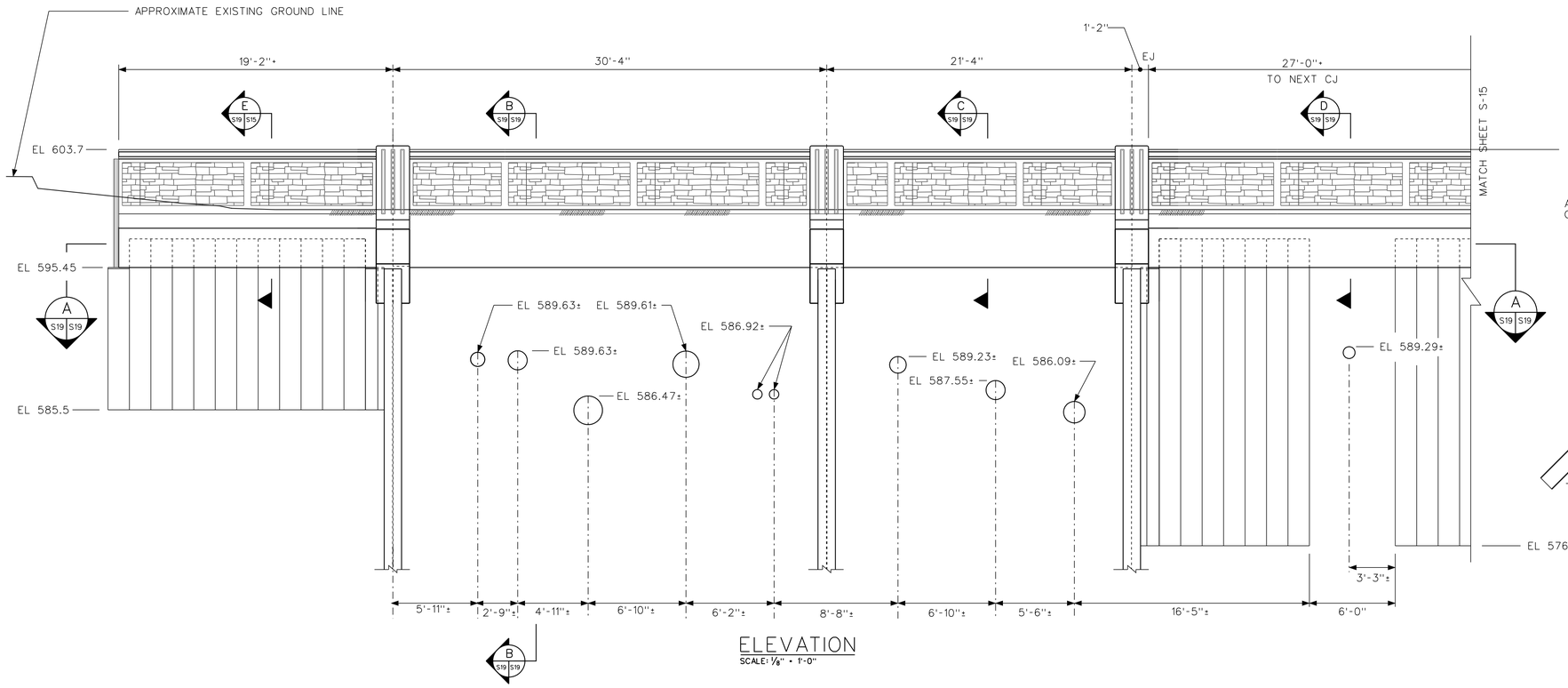

ELEVATION
SCALE: 1/8" = 1'-0"

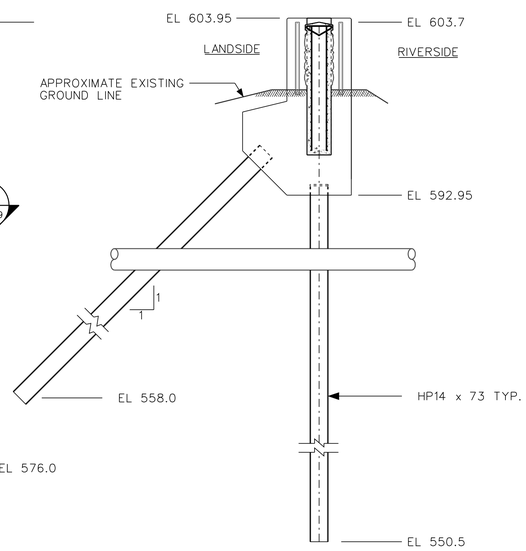

SECTION B
SCALE: 1/4" = 1'-0"
S19 S19

US Army Corps of Engineers
Chicago District

SYMBOL	AMENDMENT DESCRIPTION	DATE APPROVED	SYMBOL	DESCRIPTION	DATE APPROVED

DESIGNED BY: EGS
DRAWN BY: EGS
CHECKED BY: JJS
SUBMITTED BY: STEVE TREHARNE
DATE: AUGUST 2007
SCALE: AS SHOWN
SOLICITATION NUMBER: W912P6-07-B-0006
DATE:

U.S. ARMY ENGINEER DISTRICT
CORPS OF ENGINEERS
CHICAGO, ILLINOIS

LITTLE CALUMET RIVER, INDIANA
LOCAL FLOOD PROTECTION
STAGE V, PHASE 2

UTILITY CORRIDOR SOUTHEAST
SIDE ELEVATION AND SECTIONS

SHEET REFERENCE NUMBER:
S-19

PLOT DATE: $DATE$
FILENAME: $FILENAME$

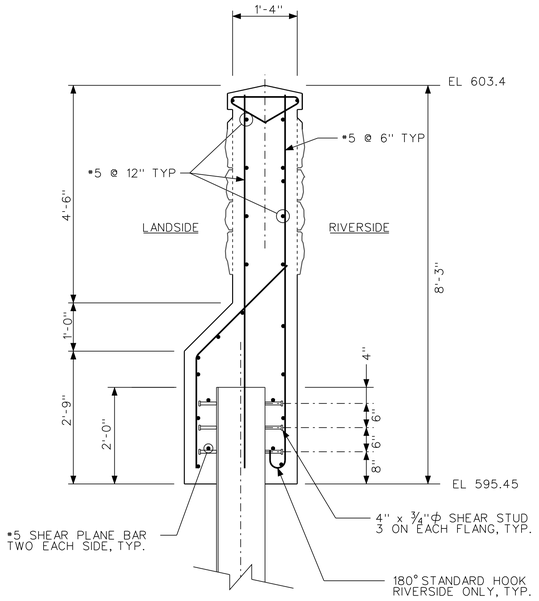

SECTION E (S14 S20)
SCALE: 3/4" = 1'-0"

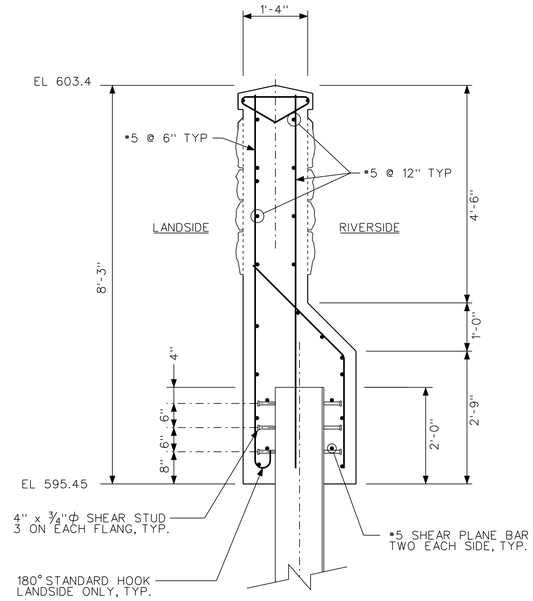

SECTION B (S20 S20)
SCALE: 3/4" = 1'-0"

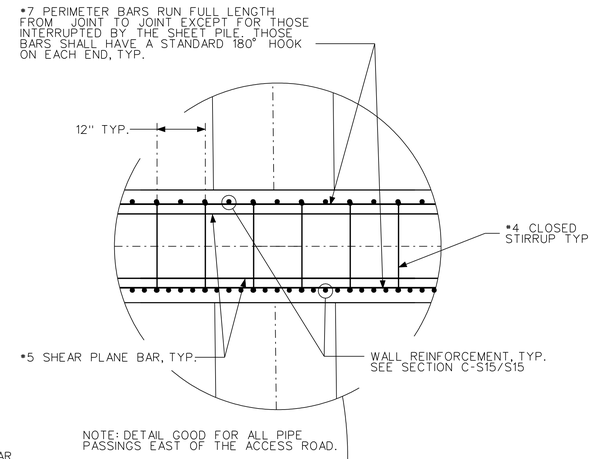

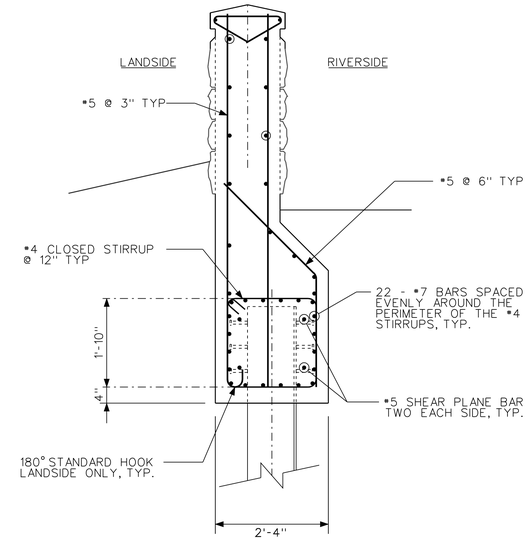

SECTION C (S20 S20)
SCALE: 3/4" = 1'-0"

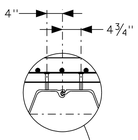

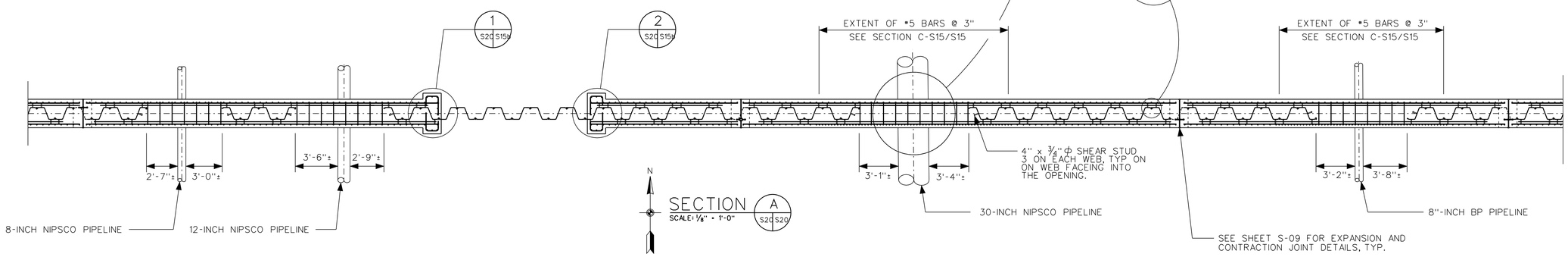

SECTION A (S20 S20)
SCALE: 1/8" = 1'-0"

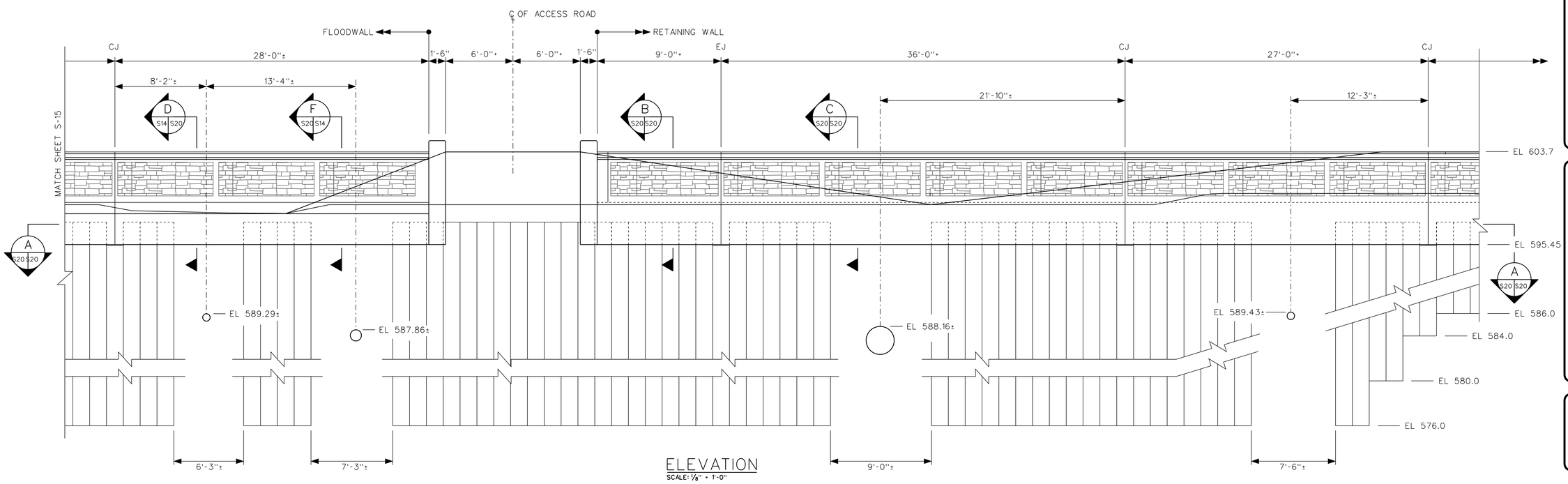

ELEVATION
SCALE: 1/8" = 1'-0"

US Army Corps of Engineers
Chicago District

SYMBOL	AMENDMENT DESCRIPTION	DATE APPROVED	SYMBOL	DESCRIPTION	DATE APPROVED

DESIGNED BY: EGS | DATE: AUGUST 2007
DRAWN BY: EGS | SCALE: AS SHOWN
CHECKED BY: JJS | SOLICITATION NUMBER: W912P6-07-B-0006
SUBMITTED BY: STEVE TREHARNE | DATE:

U.S. ARMY ENGINEER DISTRICT
CORPS OF ENGINEERS
CHICAGO, ILLINOIS

LITTLE CALUMET RIVER, INDIANA
LOCAL FLOOD PROTECTION
STAGE V, PHASE 2
UTILITY CORRIDOR SOUTHEAST
SIDE WALL PLAN, ELEVATION
AND SECTIONS SHEET 2

SHEET REFERENCE NUMBER:
S-20
SHEET 96 OF 138

PLOT DATE: $DATE$
FILENAME: $FILENAME$

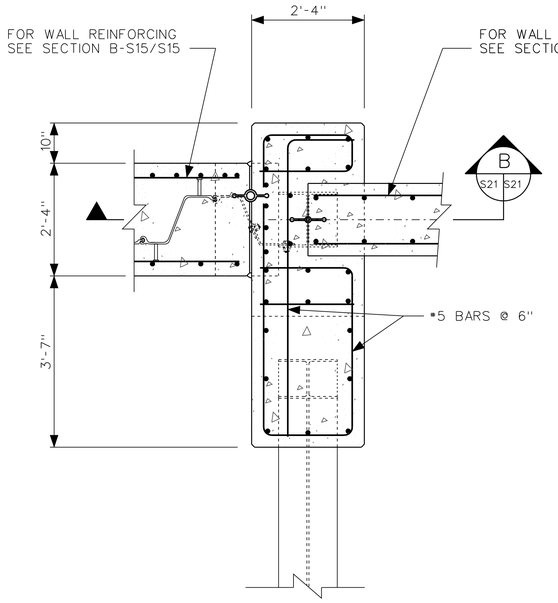

SECTION F
SCALE: 3/4" = 1'-0"
S14 S21

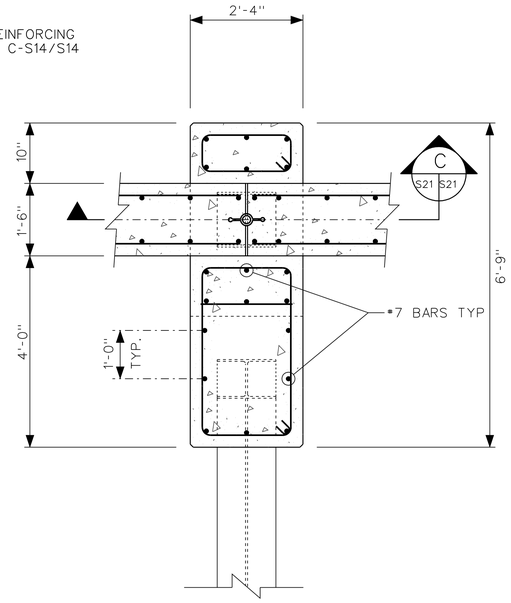

SECTION A
SCALE: 3/4" = 1'-0"
S21 S21

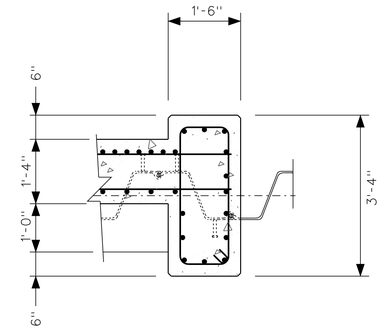

SECTION H
SCALE: 3/4" = 1'-0"
S21 S21

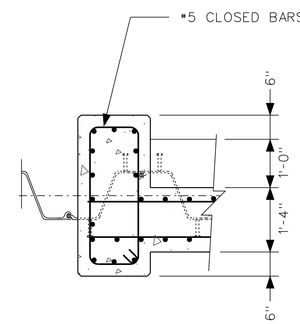

SECTION I
SCALE: 3/4" = 1'-0"
S21 S21

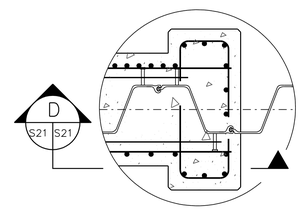

DETAIL 1
NTS
S15 S21

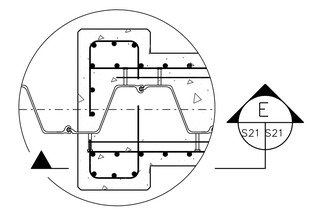

DETAIL 2
NTS
S15 S21

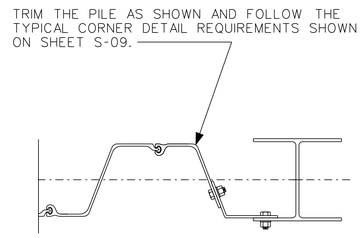

OPPOSITE HAND FOR THE EAST ABUTMENT

SECTION G
NTS
S21 S21

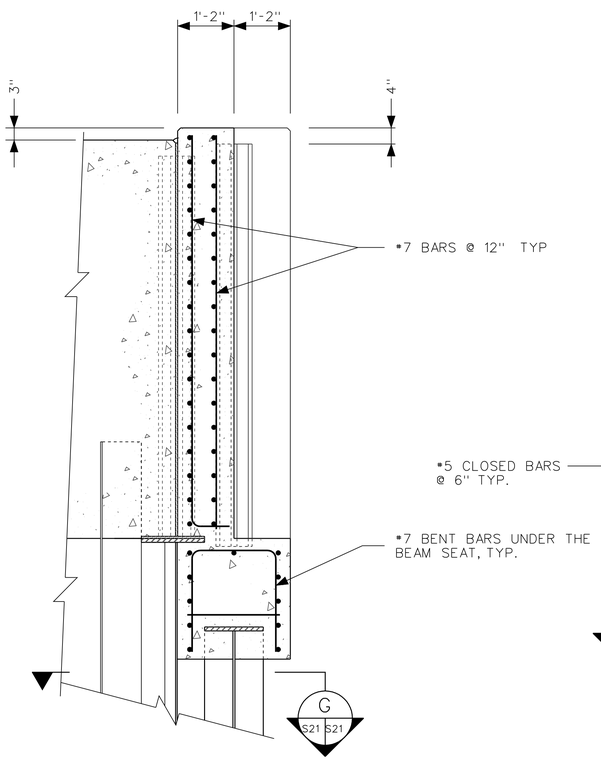

OPPOSITE HAND FOR THE EAST ABUTMENT

SECTION B
SCALE: 3/4" = 1'-0"
S21 S21

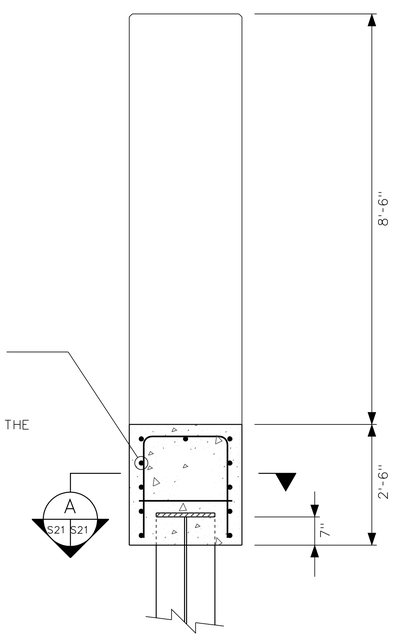

SECTION C
SCALE: 3/4" = 1'-0"
S21 S21

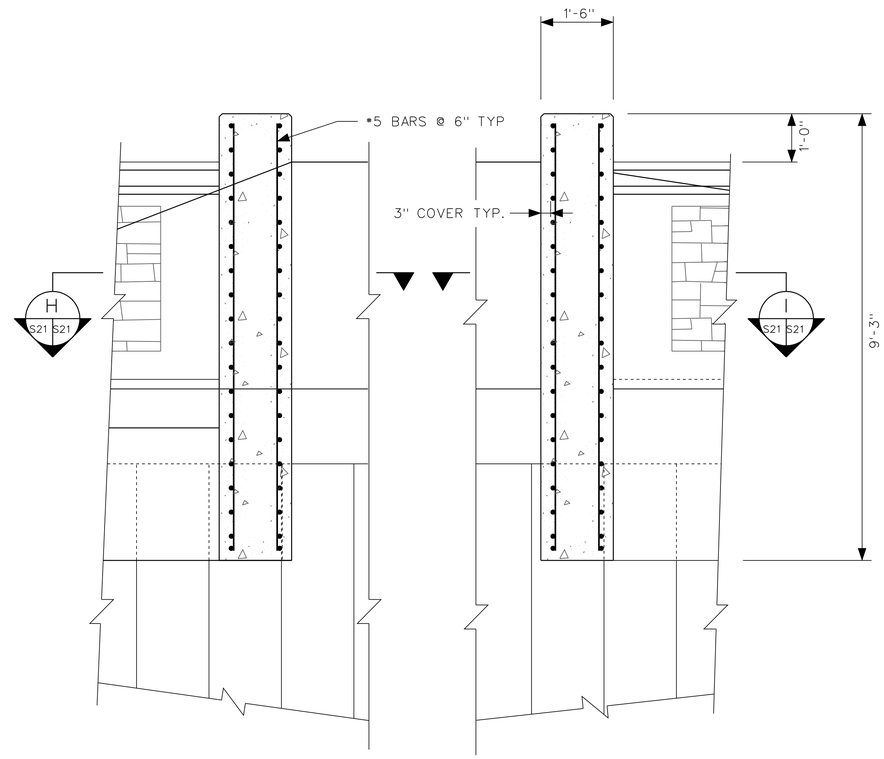

SECTION D
SCALE: 3/4" = 1'-0"
S21 S21

SECTION E
SCALE: 1/8" = 1'-0"
S21 S21

US Army Corps of Engineers
Chicago District

SYMBOL	AMENDMENT DESCRIPTION	DATE APPROVED	SYMBOL	DESCRIPTION	DATE APPROVED

DESIGNED BY: EGS
DATE: AUGUST 2007
DRAWN BY: EGS
SCALE: AS SHOWN
CHECKED BY: JJS
SOLICITATION NUMBER: W912P6-07-B-0006
SUBMITTED BY: STEVE TREHARNE
DATE:

U.S. ARMY ENGINEER DISTRICT
CORPS OF ENGINEERS
CHICAGO, ILLINOIS

LITTLE CALUMET RIVER, INDIANA
LOCAL FLOOD PROTECTION
STAGE V, PHASE 2
UTILITY CORRIDOR
SOUTHEAST SIDE
SECTIONS AND DETAILS

SHEET REFERENCE NUMBER:
S-21
SHEET 8X OF 138

PLOT DATE: $DATE$
FILENAME: $FILENAME$

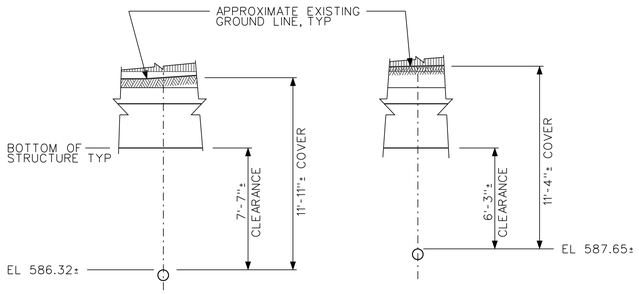

SOUTHWEST PIPELINES
SCALE: 1/4" = 1'-0"

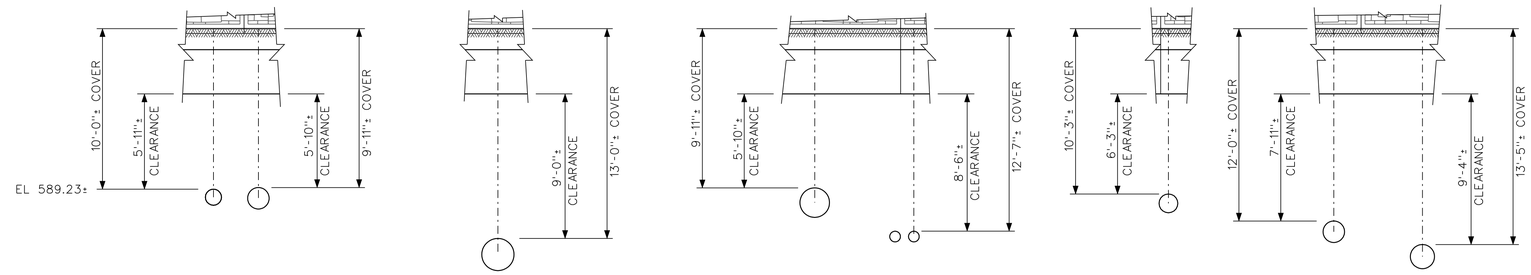

SOUTHEAST PIPELINES
SCALE: 1/4" = 1'-0"

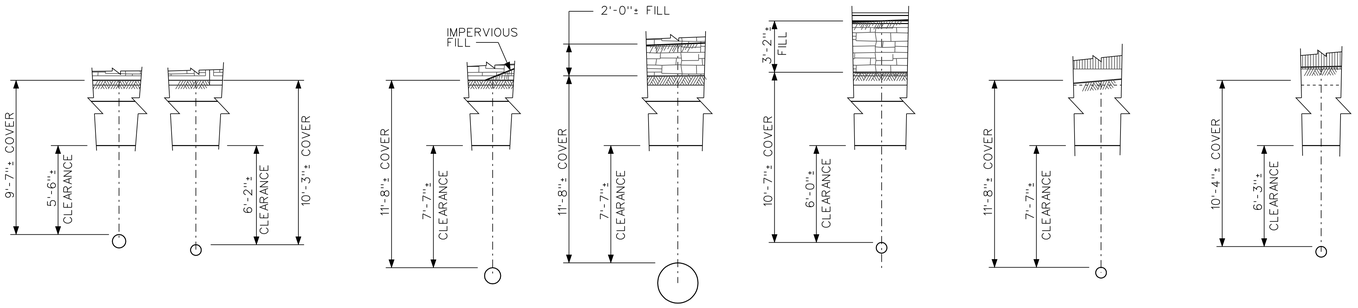

SOUTHEAST PIPELINES
SCALE: 1/4" = 1'-0"

NORTHWEST PIPELINES
SCALE: 1/4" = 1'-0"

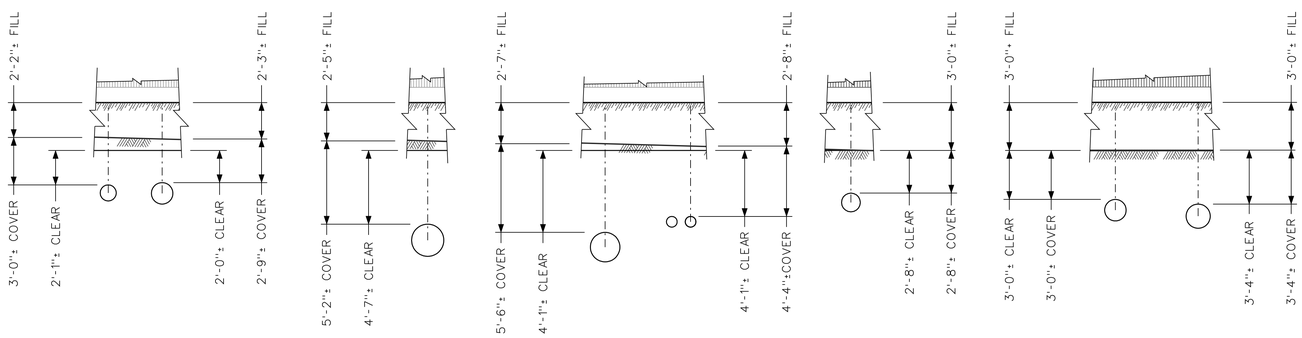

NORTHEAST PIPELINES
SCALE: 1/4" = 1'-0"

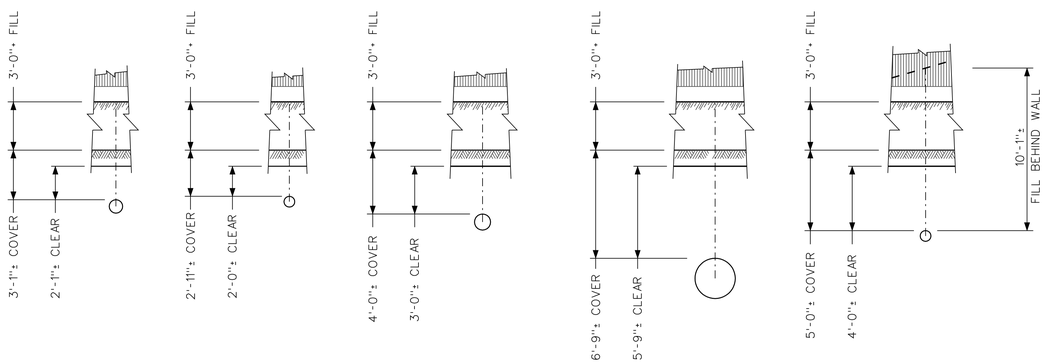

NORTHEAST PIPELINES
SCALE: 1/4" = 1'-0"

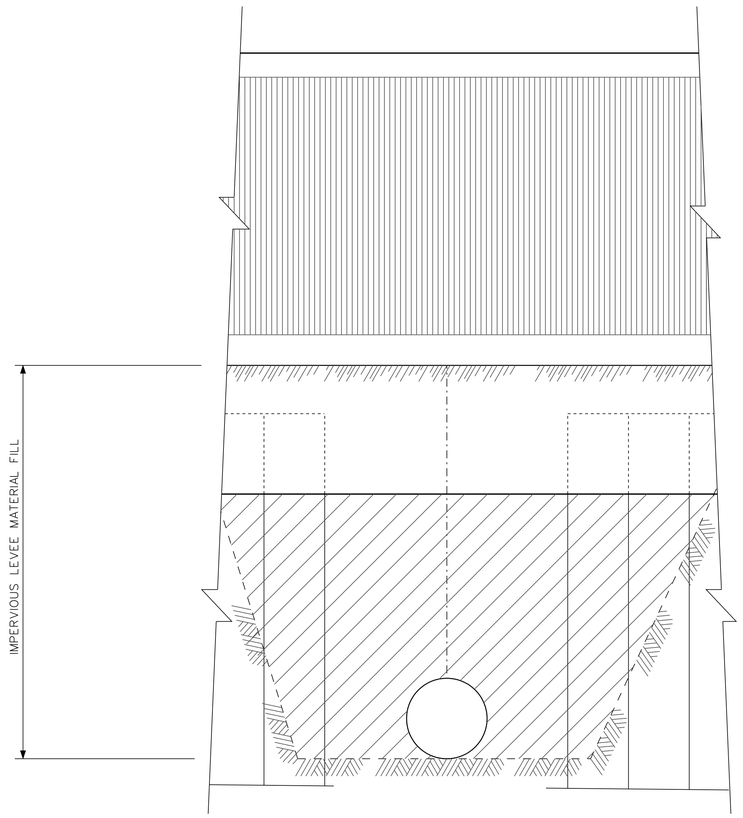

PIPELINE BACKFILL DETAIL
SCALE: 1/2" = 1'-0"

US Army Corps of Engineers
Chicago District

SYMBOL	AMENDMENT DESCRIPTION	DATE	APPROVED	SYMBOL	DESCRIPTION	DATE	APPROVED

DESIGNED BY: DATE: AUGUST 2007
DRAWN BY: SCALE: AS SHOWN
CHECKED BY: SOLICITATION NUMBER: W912P6-07-B-0006
SUBMITTED BY: STEVE TREHARNE DATE:

U.S. ARMY ENGINEER DISTRICT
CORPS OF ENGINEERS
CHICAGO, ILLINOIS

LITTLE CALUMET RIVER, INDIANA
LOCAL FLOOD PROTECTION
STAGE V, PHASE 2

PIPELINE COVER AND BACKFILL DETAILS

SHEET REFERENCE NUMBER:
S-22

SHEET 98 OF 138

PLOT DATE: $DATE$
FILENAME: $FILENAME$

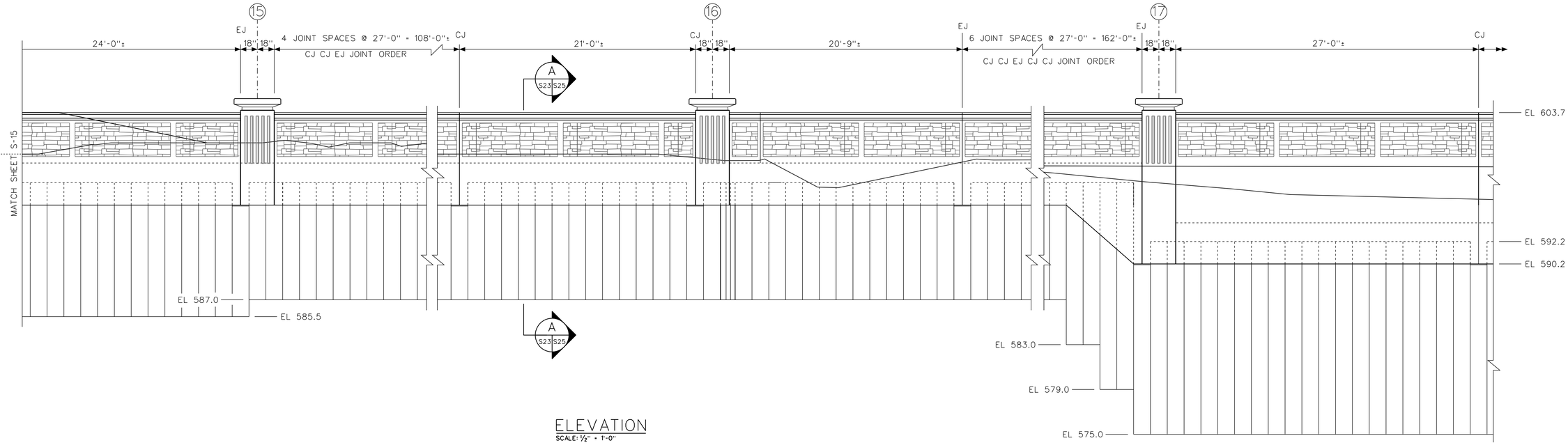

ELEVATION
SCALE: 1/2" = 1'-0"

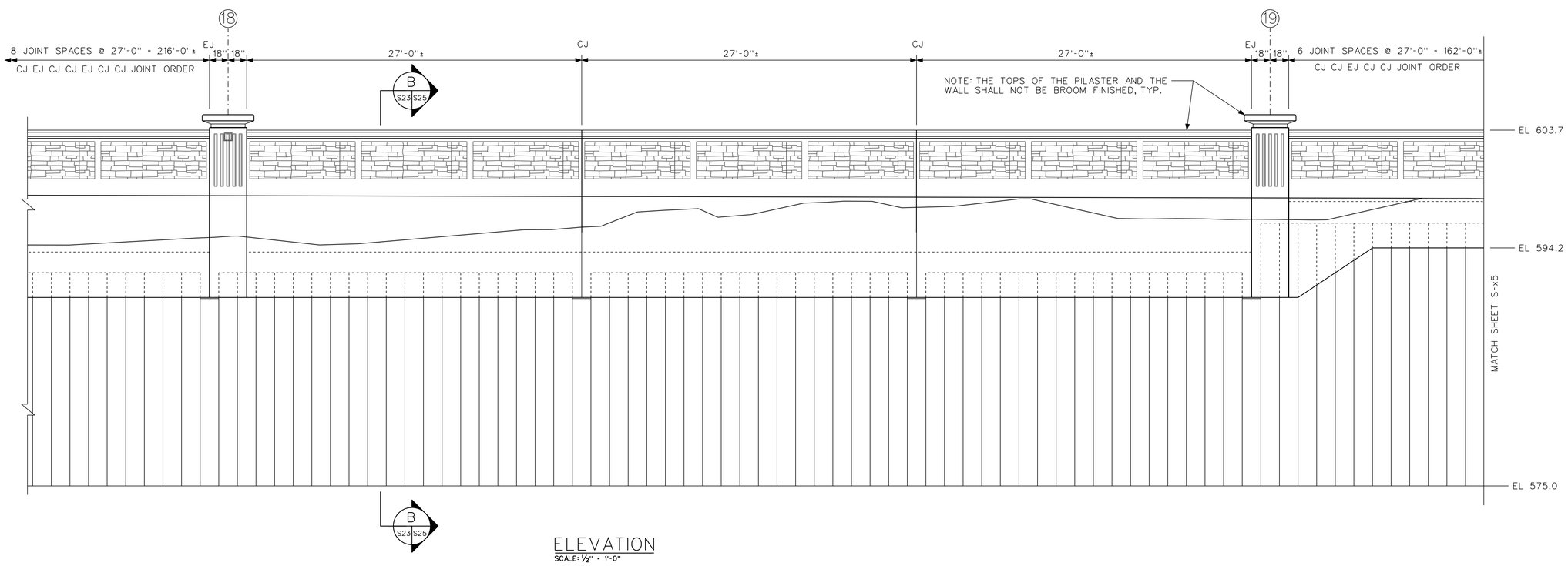

ELEVATION
SCALE: 1/2" = 1'-0"

US Army Corps of Engineers
Chicago District

SYMBOL	AMENDMENT DESCRIPTION	DATE APPROVED SYMBOL	DESCRIPTION	DATE APPROVED

DESIGNED BY: EGS
DATE: AUGUST 2007
DRAWN BY: EGS
SCALE: AS SHOWN
CHECKED BY: JJS
SOLICITATION NUMBER: W912P6-07-B-0006
SUBMITTED BY: STEVE TREHARNE
DATE:

U.S. ARMY ENGINEER DISTRICT
CORPS OF ENGINEERS
CHICAGO, ILLINOIS

LITTLE CALUMET RIVER, INDIANA
LOCAL FLOOD PROTECTION
STAGE V, PHASE 2

NORTH DRIVE I-WALL
ELEVATIONS

SHEET REFERENCE NUMBER:
S-23

SHEET 99 OF 138

PLOT DATE: $DATE$
FILENAME: $FILENAME$

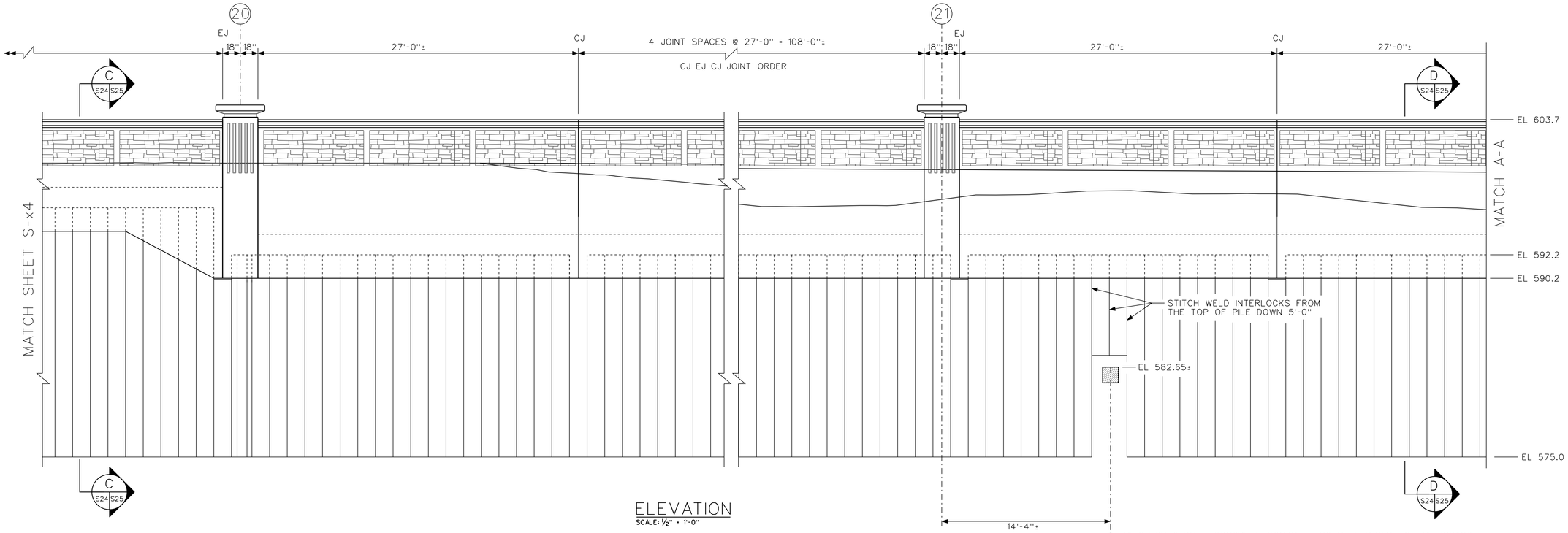

ELEVATION
SCALE: 1/2" = 1'-0"

℄ AMERITECH 9 DUCT CONCRETE CONDUIT. EXCAVATE DOWN TO THE CONDUIT TO FIELD VERIFY THE LOCATION PRIOR TO DRIVING SHEET PILE IN THIS LOCATION. DRIVE THE PILE ON EITHER SIDE, SET THE TWO PILE SECTIONS OVER THE PIPE DOWN TO 1'-0" ABOVE THE CONDUIT AND STITCH WELD IN PLACE. BACKFILL THE EXCAVATION WITH IMPERVIOUS FILL.

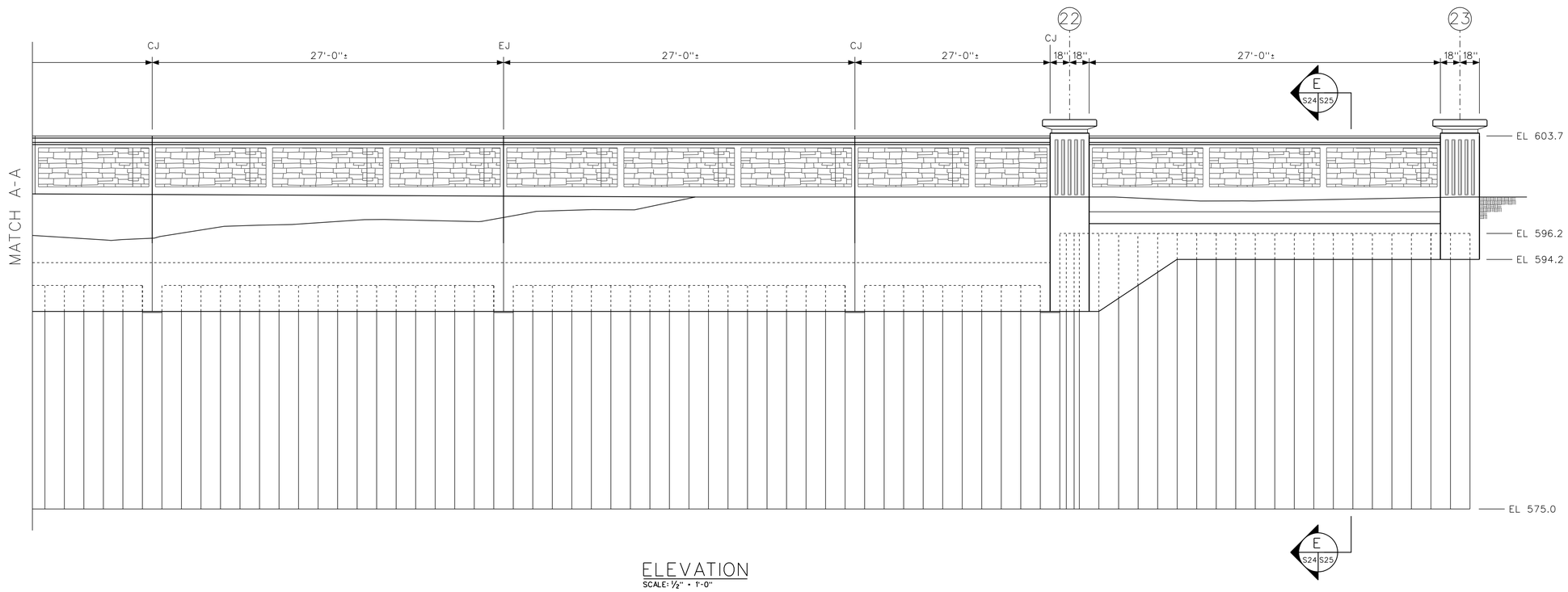

ELEVATION
SCALE: 1/2" = 1'-0"

US Army Corps of Engineers
Chicago District

SYMBOL	AMENDMENT DESCRIPTION	DATE APPROVED	SYMBOL	DESCRIPTION	DATE APPROVED

DESIGNED BY: EGS
DATE: AUGUST 2007
DRAWN BY: EGS
SCALE: AS SHOWN
CHECKED BY: JJS
SOLICITATION NUMBER: W912P6-07-B0006
SUBMITTED BY: STEVE TREHARNE
DATE:

U.S. ARMY ENGINEER DISTRICT
CORPS OF ENGINEERS
CHICAGO, ILLINOIS

LITTLE CALUMET RIVER, INDIANA
LOCAL FLOOD PROTECTION
STAGE V, PHASE 2

NORTH DRIVE I-WALL
ELEVATIONS SHEET #2

SHEET REFERENCE NUMBER:
S-24
SHEET 100 OF 138

PLOT DATE: $DATE$
FILENAME: $FILENAME$

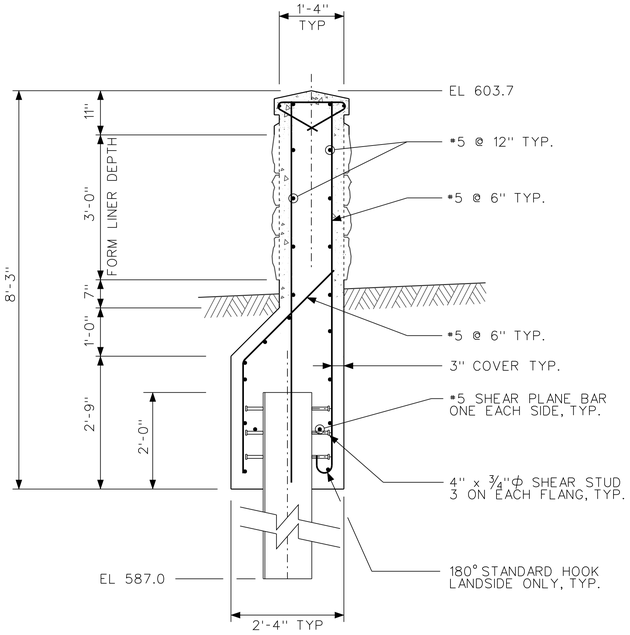

SECTION A
SCALE: 1/2" = 1'-0" (S4x4 | S25)

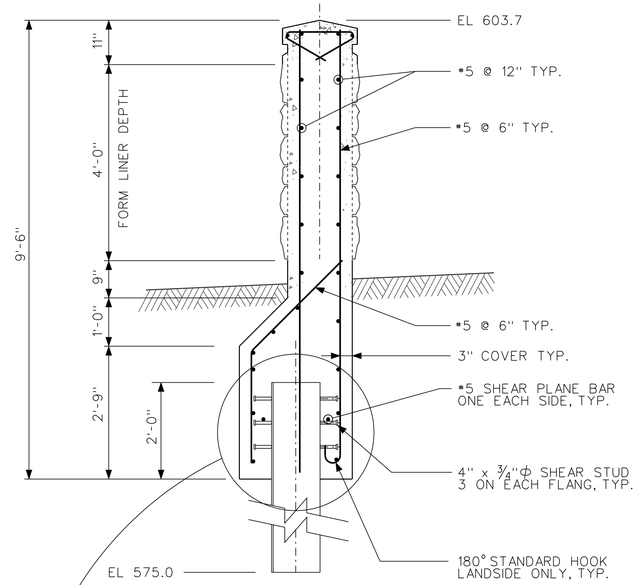

SECTION C
SCALE: 1/2" = 1'-0" (S24 | S25)

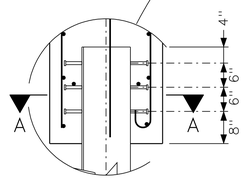

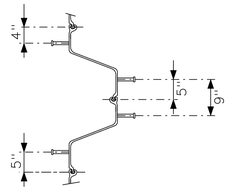

TYPICAL STUD LAYOUT FOR THE NORTH DRIVE WALL

SECTION A-A

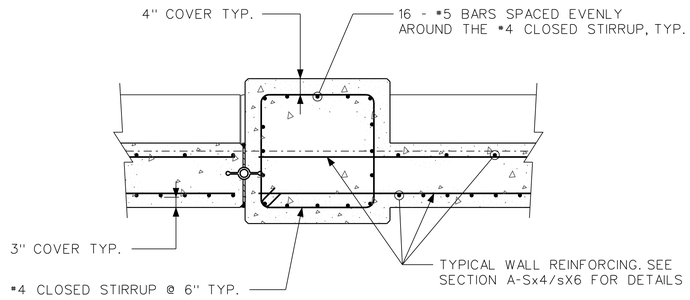

SECTION F
SCALE: 1/2" = 1'-0" (S25 | S25)

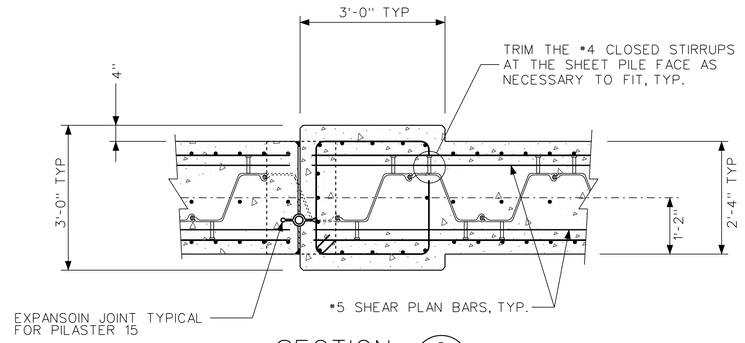

SECTION G
SCALE: 1/2" = 1'-0" (S25 | S25)

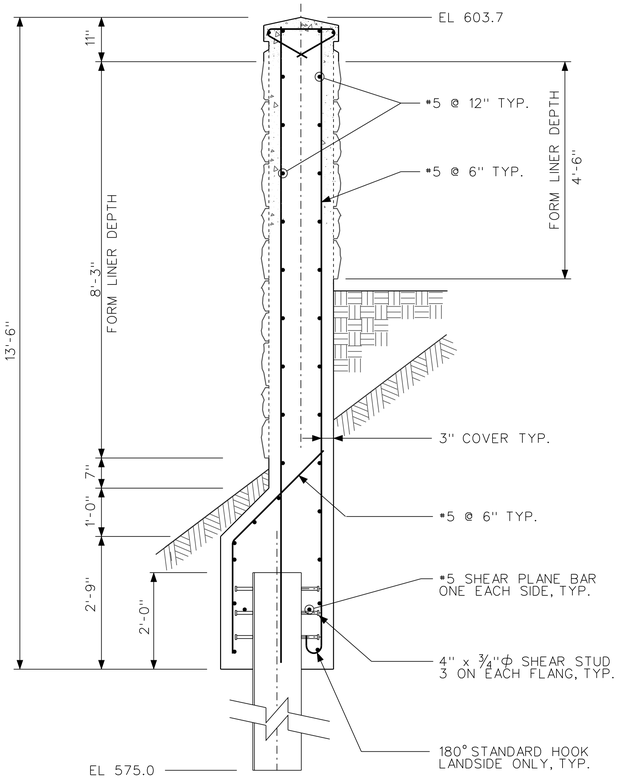

SECTION B | D
SCALE: 1/2" = 1'-0" (Sx4 | S25 | S24 | S25)

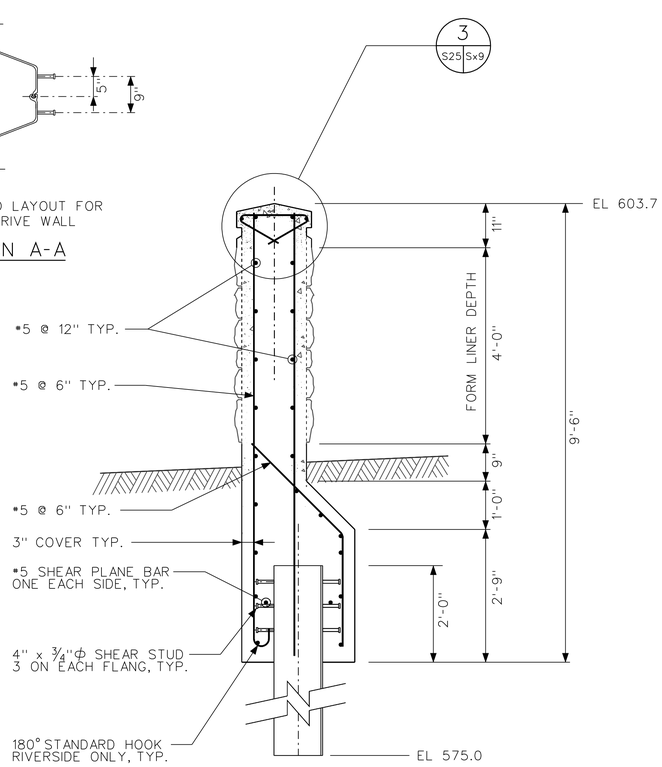

SECTION E
SCALE: 1/2" = 1'-0" (S24 | S25)

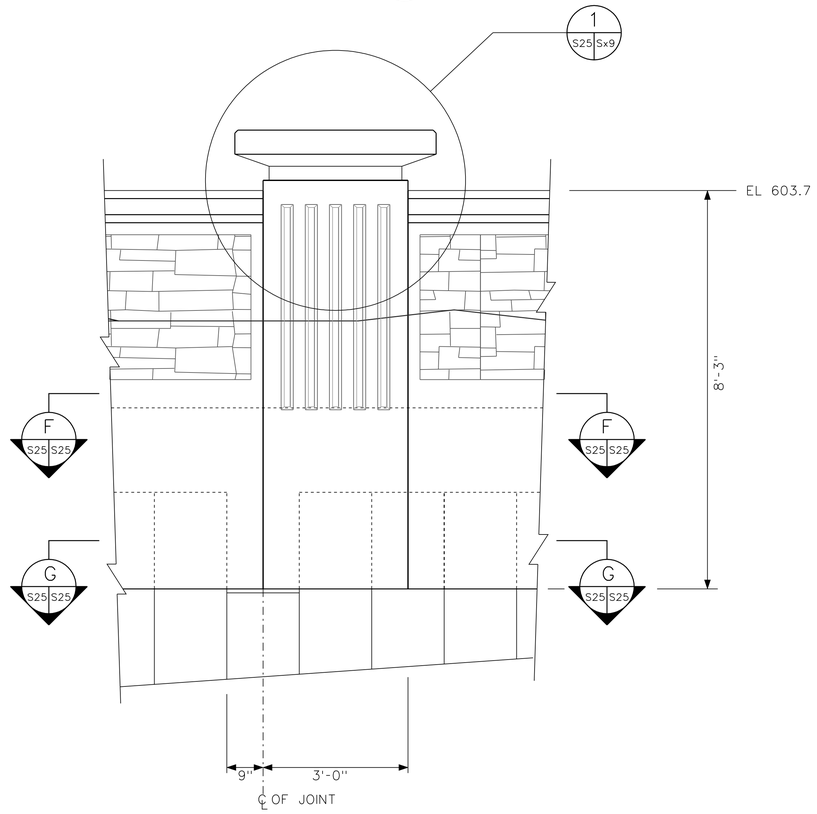

PILASTER 15 ELEVATION
SCALE: 3/4" = 1'-0"

US Army Corps of Engineers
Chicago District

SYMBOL	AMENDMENT DESCRIPTION	DATE APPROVED	SYMBOL	DESCRIPTION	DATE APPROVED

DESIGNED BY: EGS
DRAWN BY: EGS
CHECKED BY: JJS
SUBMITTED BY: STEVE TRECHARNE
DATE: AUGUST 2007
SCALE: AS SHOWN
SOLICITATION NUMBER: W912P6-07-B-0006
DATE:

U.S. ARMY ENGINEER DISTRICT
CORPS OF ENGINEERS
CHICAGO, ILLINOIS

LITTLE CALUMET RIVER, INDIANA
LOCAL FLOOD PROTECTION
STAGE V, PHASE 2

NORTH DRIVE I-WALL
SECTION AND DETAILS

SHEET REFERENCE NUMBER:
S-25
SHEET 101 OF 138

PLOT DATE: $DATE$
FILENAME: $FILENAME$

NOTE: THE FORM FLUTING STRIP DEPTH ON THE RIVERSIDE OF THE PILASTER SHALL BE 8'-0" BETWEEN PILASTER 17 TO 19 AND BETWEEN PILASTERS 20 TO 21. ON ALL OTHER PILASTERS IT SHALL BE 4'-3". SEE SHEET S-x9 FOR DETAILS.

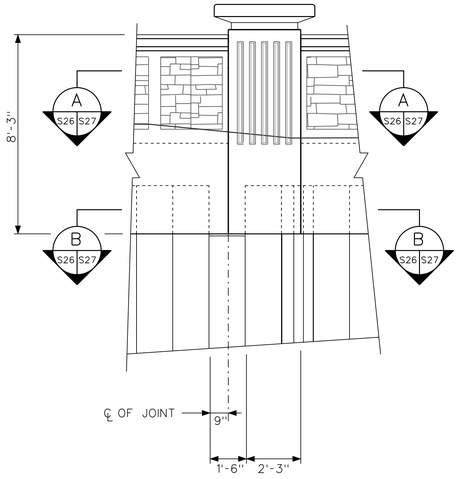

PILASTER 16 ELEVATION
SCALE: 3/8" = 1'-0"

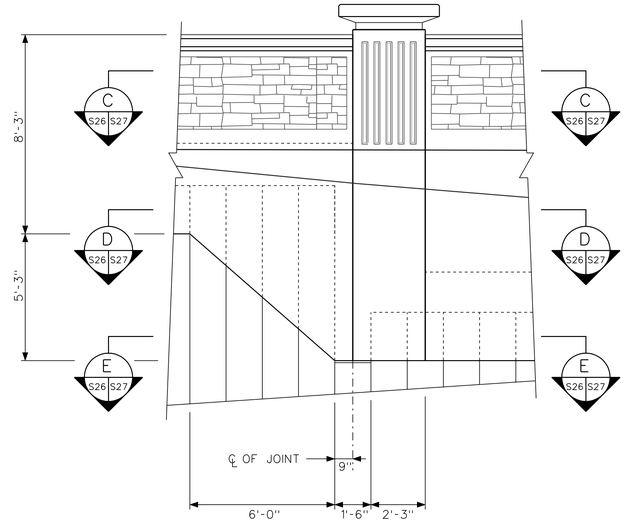

PILASTER 17 ELEVATION
SCALE: 3/8" = 1'-0"

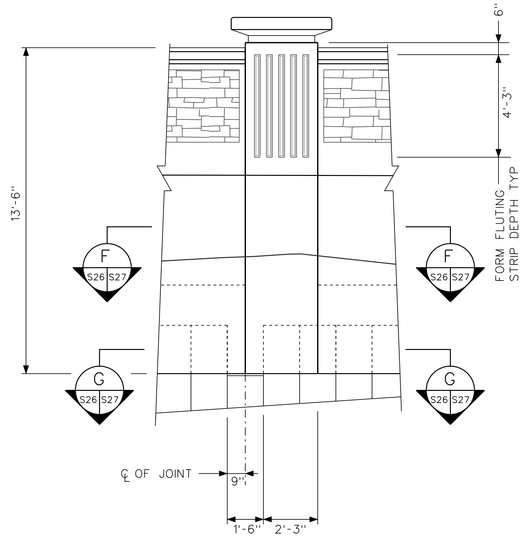

PILASTER 18 ELEVATION
SCALE: 3/8" = 1'-0"

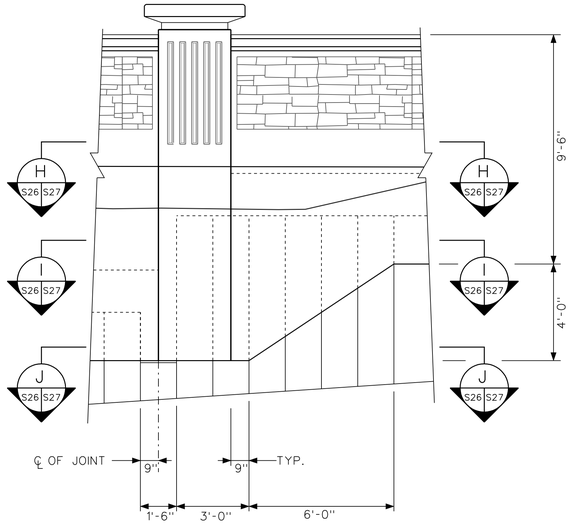

PILASTER 19 ELEVATION
SCALE: 3/8" = 1'-0"

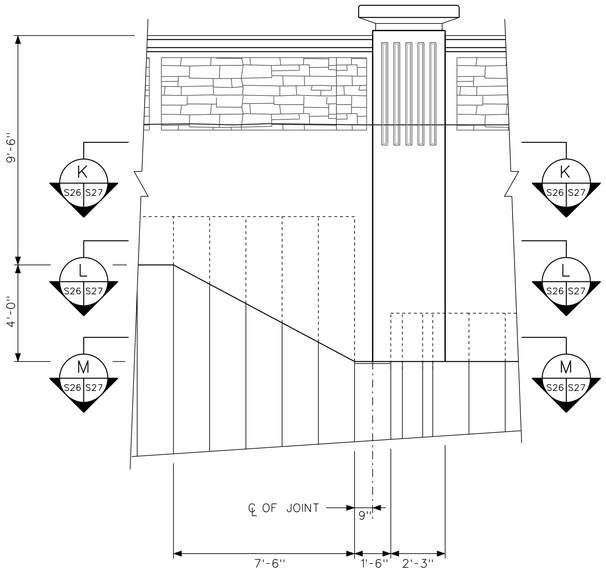

PILASTER 20 ELEVATION
SCALE: 3/8" = 1'-0"

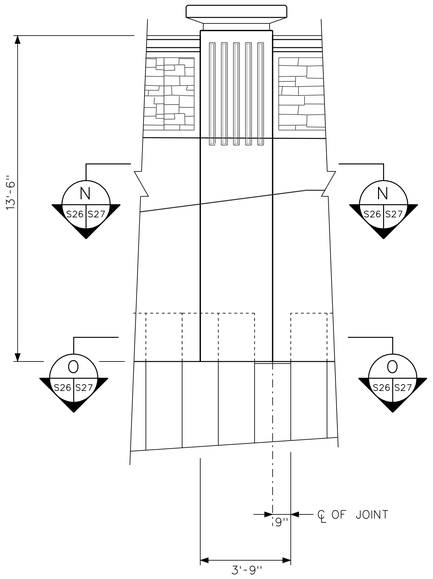

PILASTER 21 ELEVATION
SCALE: 3/8" = 1'-0"

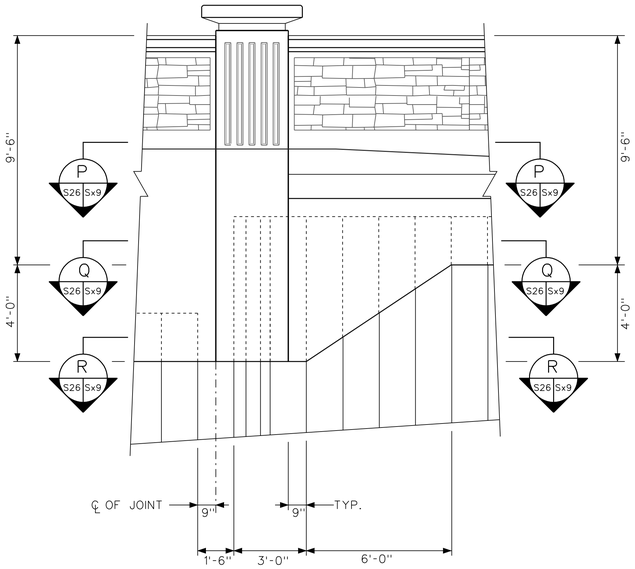

PILASTER 22 ELEVATION
SCALE: 3/8" = 1'-0"

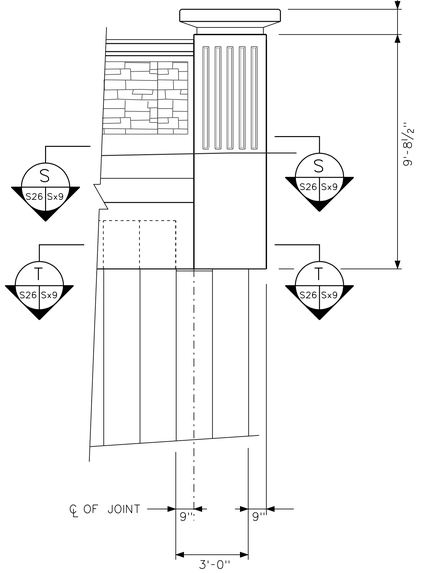

PILASTER 23 ELEVATION
SCALE: 3/8" = 1'-0"

US Army Corps of Engineers
Chicago District

SYMBOL	AMENDMENT DESCRIPTION	DATE APPROVED	SYMBOL	DESCRIPTION	DATE APPROVED

DESIGNED BY: EGS
DATE: AUGUST 2007
DRAWN BY: EGS
SCALE: AS SHOWN
CHECKED BY: JJS
SOLICITATION NUMBER: W912P8-07-B-0006
SUBMITTED BY: STEVE TREHARNE
DATE:

U.S. ARMY ENGINEER DISTRICT
CORPS OF ENGINEERS
CHICAGO, ILLINOIS

LITTLE CALUMET RIVER, INDIANA
LOCAL FLOOD PROTECTION
STAGE V, PHASE 2

NORTH DRIVE I-WALL
PILASTER ELEVATIONS

SHEET REFERENCE NUMBER:
S-26

SHEET 102 OF 138

PLOT DATE: $DATE$
FILENAME: $FILENAME$

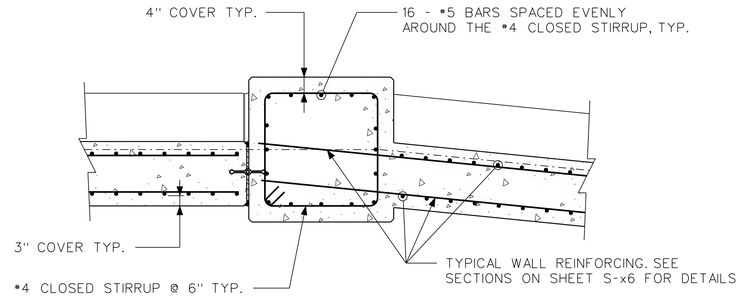

SECTION A (S26 S27)
SCALE: ½" = 1'-0"

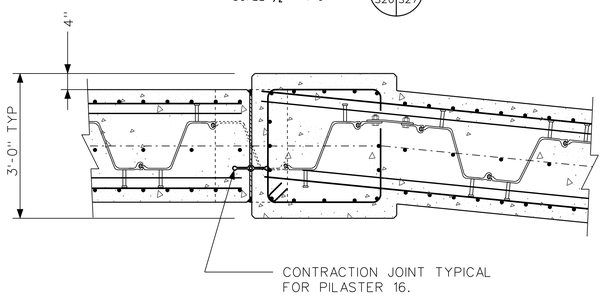

SECTION B (S26 S27)
SCALE: ½" = 1'-0"

PILASTER 16 SECTIONS

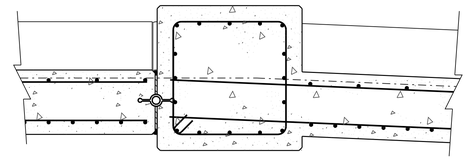

SECTION F (S26 S27)
SCALE: ½" = 1'-0"

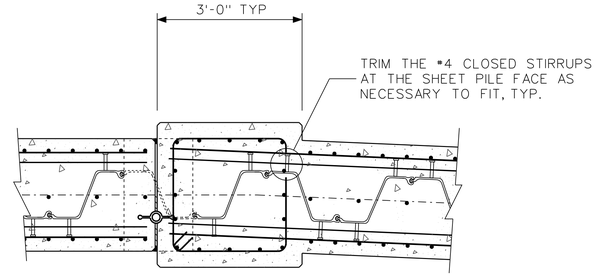

SECTION G (S26 S27)
SCALE: ½" = 1'-0"

PILASTER 18 SECTIONS

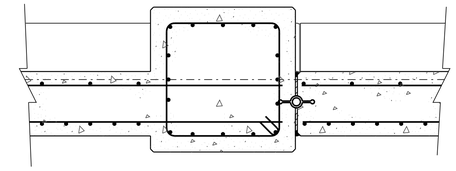

SECTION N (S26 S27)
SCALE: ½" = 1'-0"

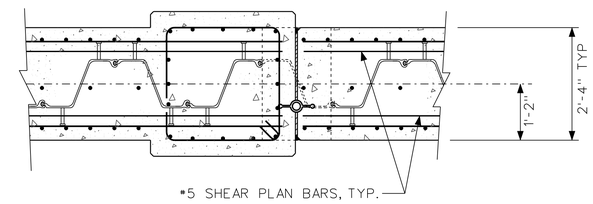

SECTION O (S26 S27)
SCALE: ½" = 1'-0"

PILASTER 21 SECTIONS

RIVERSIDE TYP.

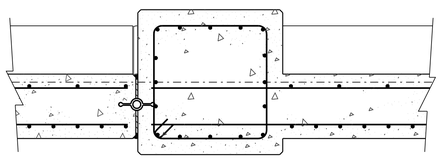

LANDSIDE TYP.

SECTION C (S26 S27)
SCALE: ½" = 1'-0"

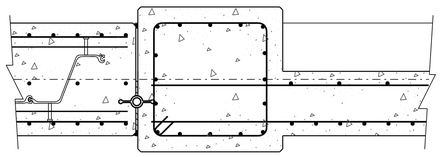

SECTION D (S26 S27)
SCALE: ½" = 1'-0"

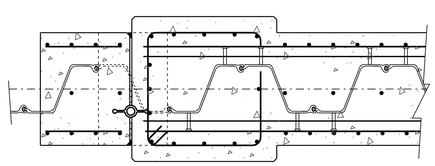

SECTION E (S26 S27)
SCALE: ½" = 1'-0"

PILASTER 17 SECTIONS

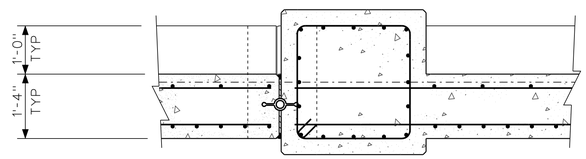

SECTION H (S26 S27)
SCALE: ½" = 1'-0"

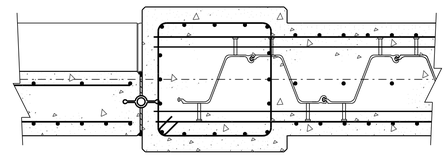

SECTION I (S26 S27)
SCALE: ½" = 1'-0"

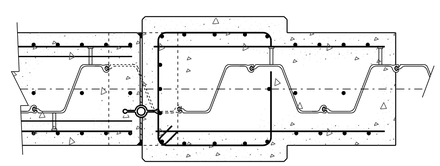

SECTION J (S26 S27)
SCALE: ½" = 1'-0"

PILASTER 19 SECTIONS

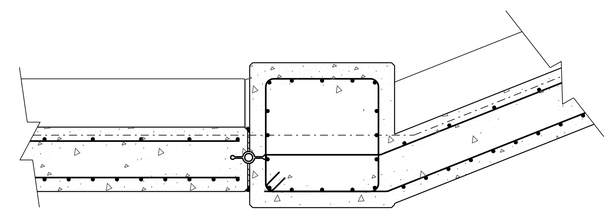

SECTION K (S26 S27)
SCALE: ½" = 1'-0"

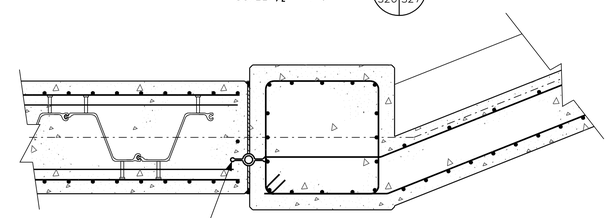

SECTION L (S26 S27)
SCALE: ½" = 1'-0"

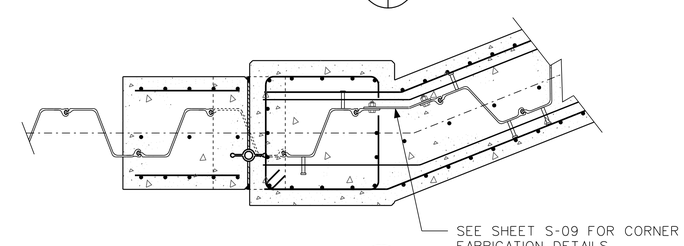

SECTION M (S26 S27)
SCALE: ½" = 1'-0"

PILASTER 20 SECTIONS

US Army Corps of Engineers
Chicago District

SYMBOL	AMENDMENT DESCRIPTION	DATE APPROVED	SYMBOL	DESCRIPTION	DATE APPROVED

DESIGNED BY: EGS
DATE: AUGUST 2007
DRAWN BY: EGS
SCALE: AS SHOWN
CHECKED BY: JJS
SOLICITATION NUMBER: W912P8-07-B-0006
SUBMITTED BY: STEVE TREHARNE
DATE:

U.S. ARMY ENGINEER DISTRICT
CORPS OF ENGINEERS
CHICAGO, ILLINOIS

LITTLE CALUMET RIVER, INDIANA
LOCAL FLOOD PROTECTION
STAGE V, PHASE 2
NORTH DRIVE I-WALL
I-WALL PILASTER SECTIONS

SHEET REFERENCE NUMBER:
S-27
SHEET 103 OF 138

PLOT DATE: $DATE$
FILENAME: $FILENAME$

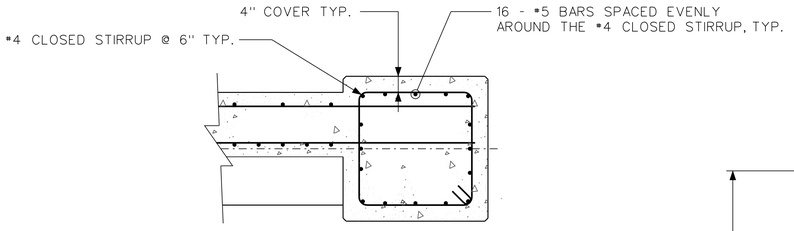

SECTION S (S28/S28)
SCALE: 1/2" = 1'-0"

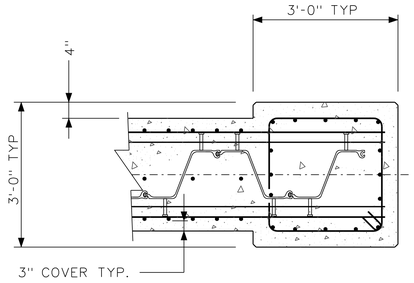

SECTION T (S28/S28)
SCALE: 1/2" = 1'-0"

PILASTER 23 SECTIONS

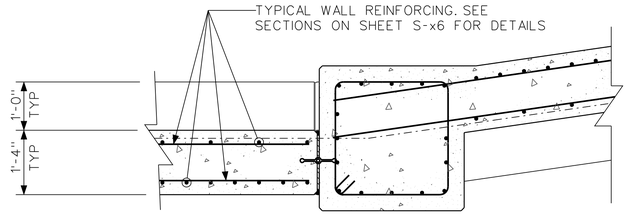

SECTION P (S28/S28)
SCALE: 1/2" = 1'-0"

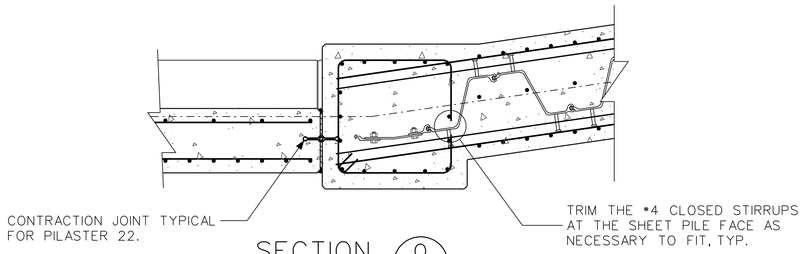

SECTION Q (S28/S28)
SCALE: 1/2" = 1'-0"

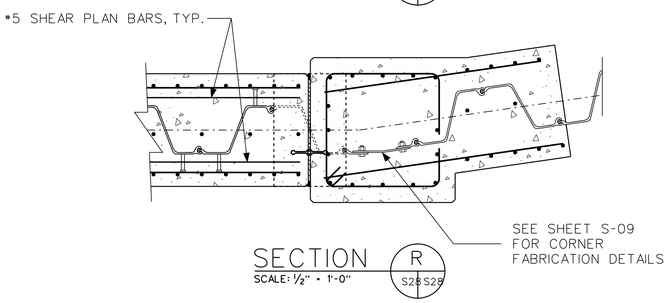

SECTION R (S28/S28)
SCALE: 1/2" = 1'-0"

PILASTER 22 SECTIONS

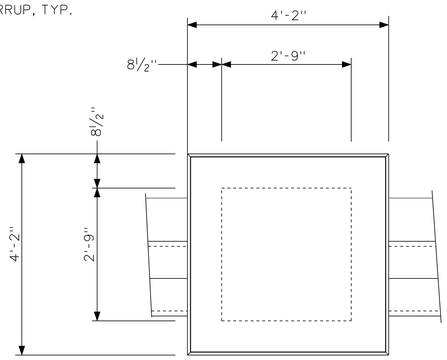

PILASTER PLAN
SCALE: 3/4" = 1'-0"

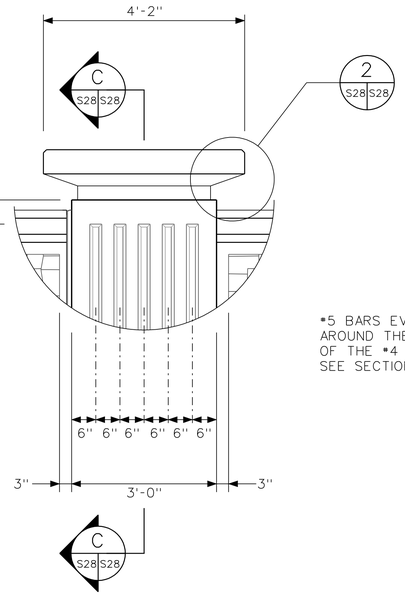

DETAIL 1 (S25/S28)
SCALE: 3/4" = 1'-0"

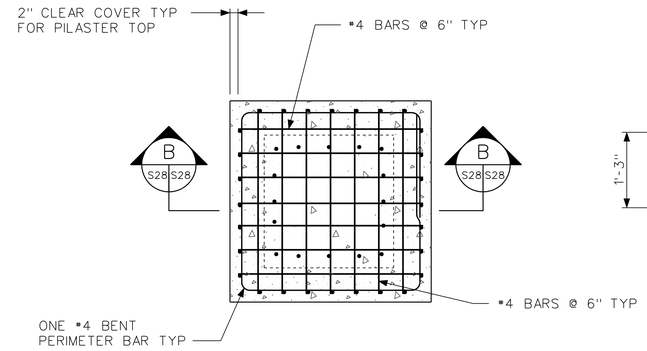

SECTION A (S28/S28)
SCALE: 3/4" = 1'-0"

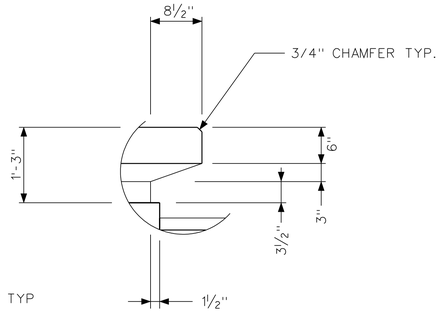

DETAIL 2 (S28/S28)
SCALE: 3/4" = 1'-0"

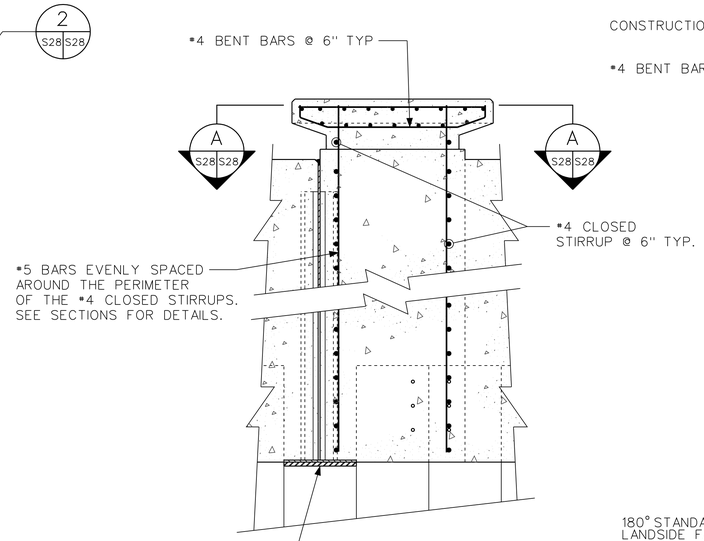

SECTION B (S28/S28)
SCALE: 3/4" = 1'-0"

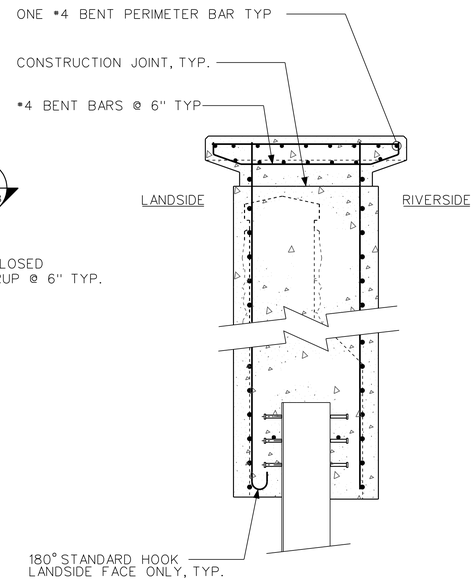

SECTION C (S28/S28)
SCALE: 3/4" = 1'-0"

TYPICAL NORTH DRIVE I-WALL PILASTER DETAILS

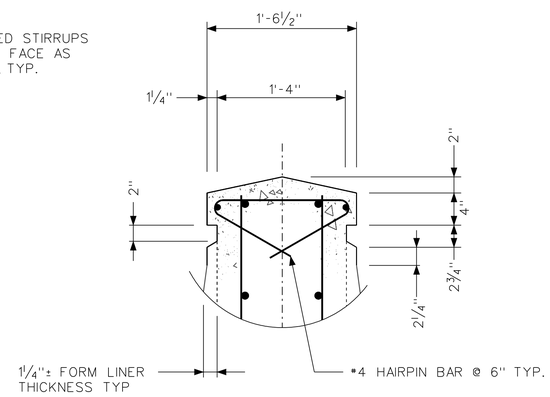

DETAIL 3 (S25/S28)
SCALE: 3/4" = 1'-0"

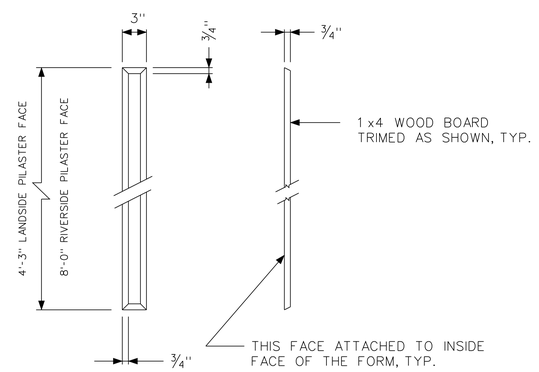

SEE SHEET S-x7 FOR FURHTER DETAILS

FLUTING STRIP DETAIL 4 (S28/S28)
NTS

US Army Corps of Engineers
Chicago District

SYMBOL	AMENDMENT DESCRIPTION	DATE APPROVED	SYMBOL	DESCRIPTION	DATE APPROVED

DESIGNED BY: EGS
DATE: AUGUST 2007
DRAWN BY: EGS
SCALE: AS SHOWN
CHECKED BY: JJS
SOLICITATION NUMBER: W912P8-07-B-0006
SUBMITTED BY: STEVE TREHARNE
DATE:

U.S. ARMY ENGINEER DISTRICT
CORPS OF ENGINEERS
CHICAGO, ILLINOIS

LITTLE CALUMET RIVER, INDIANA
LOCAL FLOOD PROTECTION
STAGE V, PHASE 2
NORTH DRIVE I-WALL
PILASTER SECTION AND DETAILS

SHEET REFERENCE NUMBER:
S-28
SHEET 104 OF 138

PLOT DATE: $DATE$
FILENAME: $FILENAME$

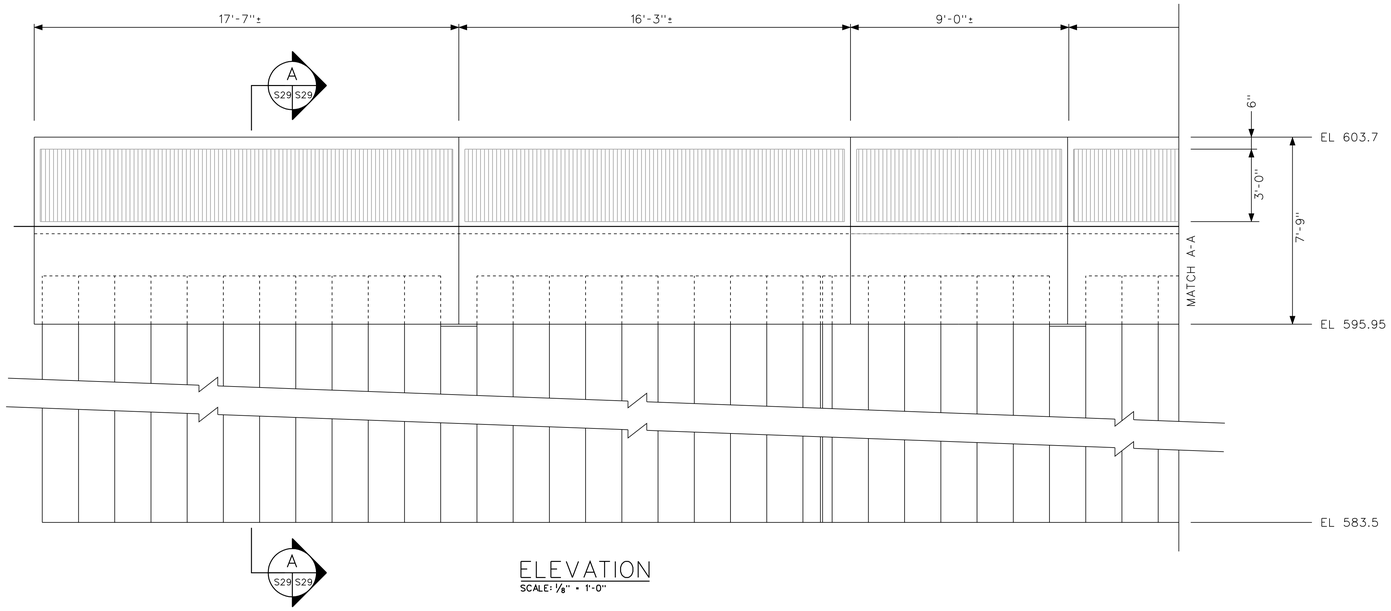

ELEVATION
SCALE: 1/8" = 1'-0"

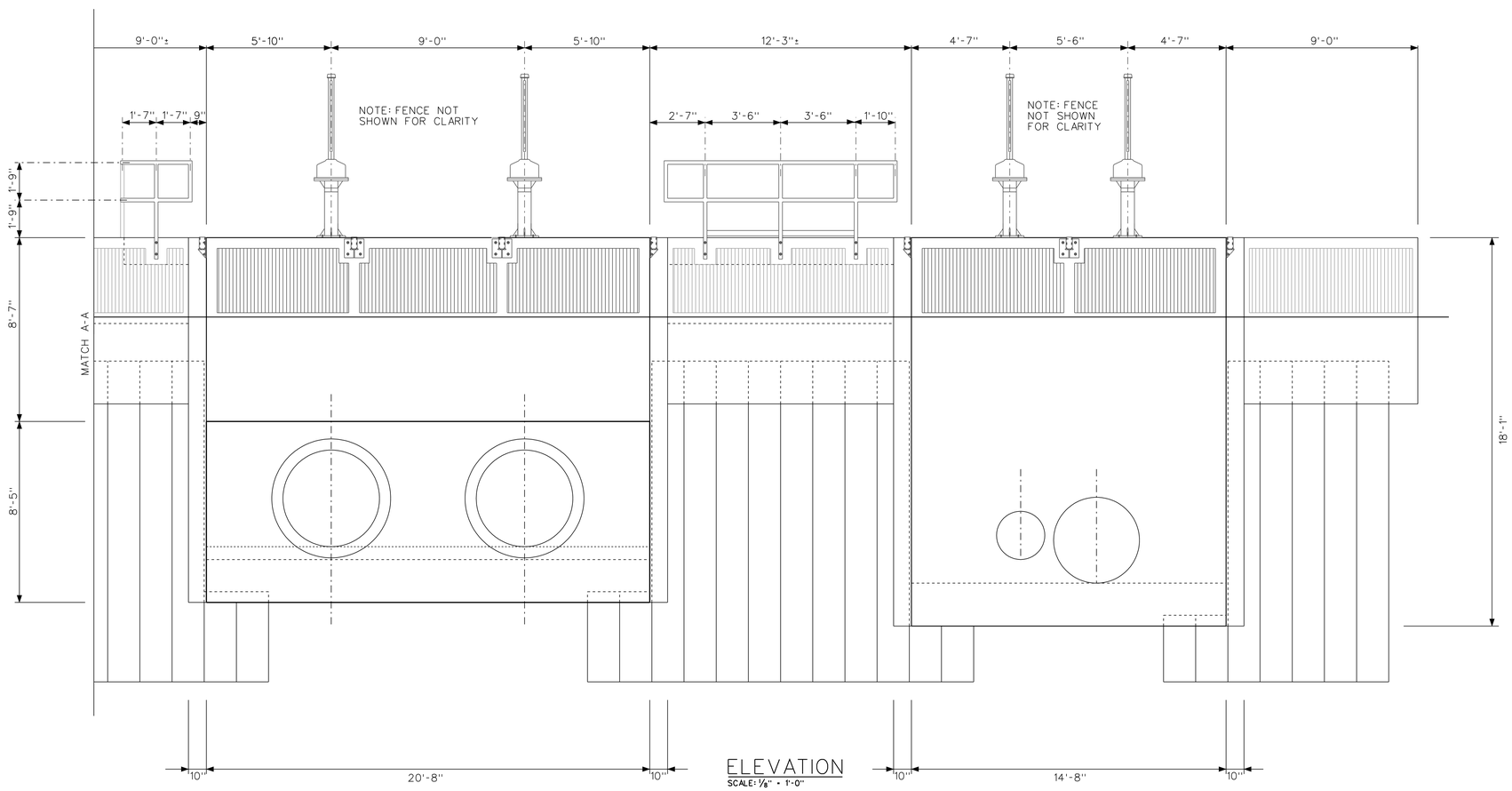

ELEVATION
SCALE: 1/8" = 1'-0"

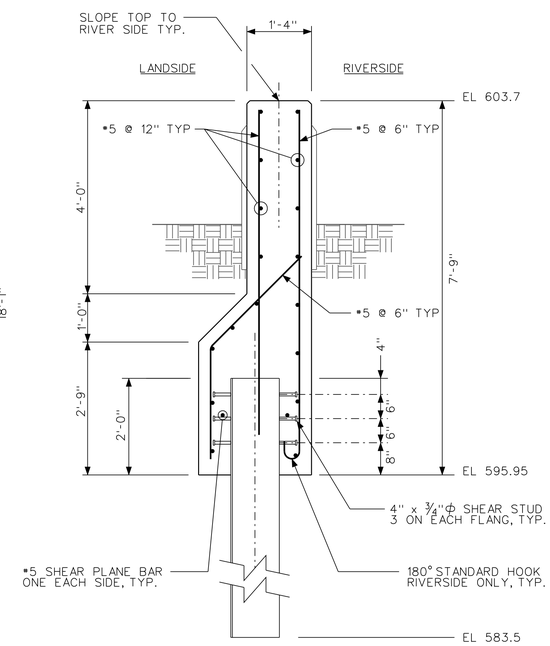

SECTION A S29 S29
SCALE: 3/4" = 1'-0"

US Army Corps of Engineers
Chicago District

SYMBOL	AMENDMENT DESCRIPTION	DATE APPROVED	SYMBOL	DESCRIPTION	DATE APPROVED

DESIGNED BY: EGS
DATE: AUGUST 2007
DRAWN BY: EGS
SCALE: AS SHOWN
CHECKED BY: JJS
SOLICITATION NUMBER: W912P6-07-B-0006
SUBMITTED BY: STEVE TREHARNE
DATE:

U.S. ARMY ENGINEER DISTRICT
CORPS OF ENGINEERS
CHICAGO, ILLINOIS

LITTLE CALUMET RIVER, INDIANA
LOCAL FLOOD PROTECTION
STAGE V, PHASE 2

KENNEDY AVE OUTLET
STRUCTURES ELEVATIONS

SHEET REFERENCE NUMBER:
S-29
SHEET 105 OF 138

PLOT DATE: $DATE$
FILENAME: $FILENAME$

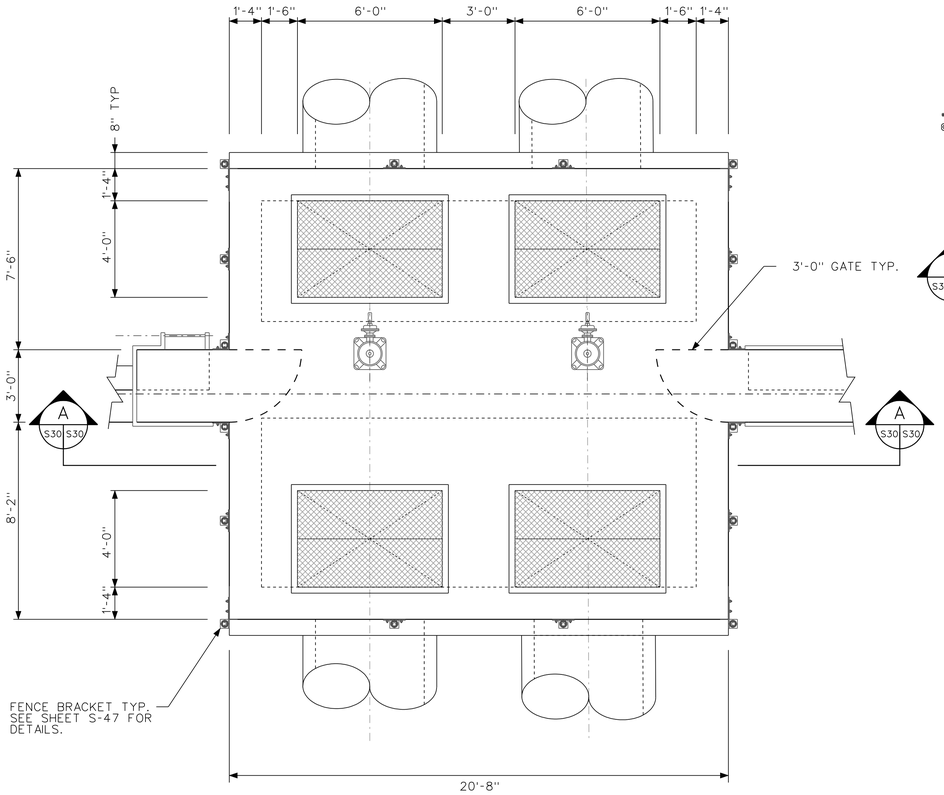

PLAN
SCALE: 1/8" = 1'-0"

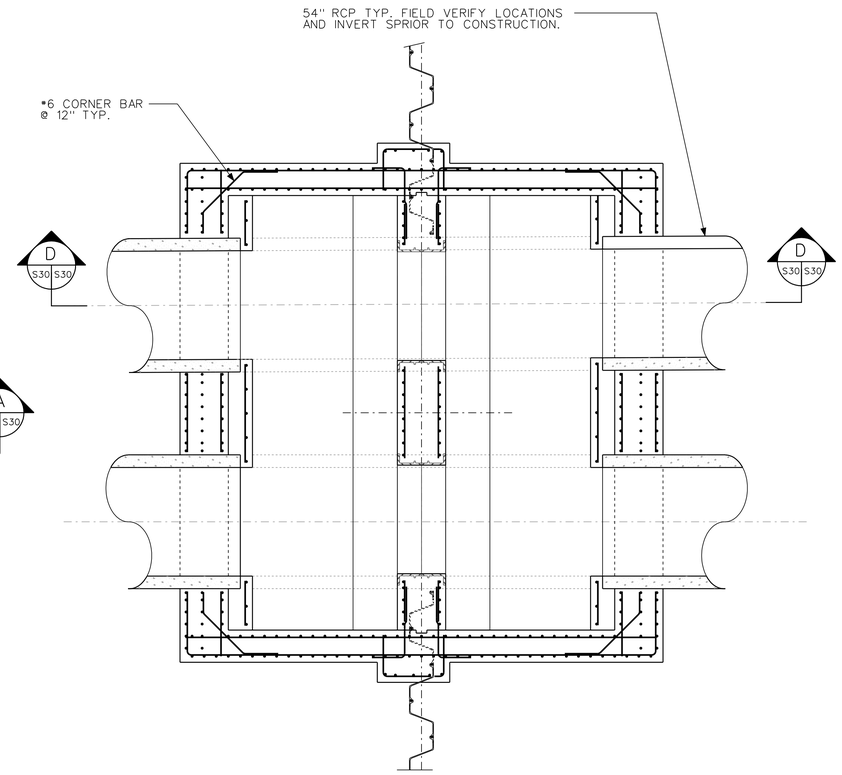

SECTION B
SCALE: 1/8" = 1'-0"

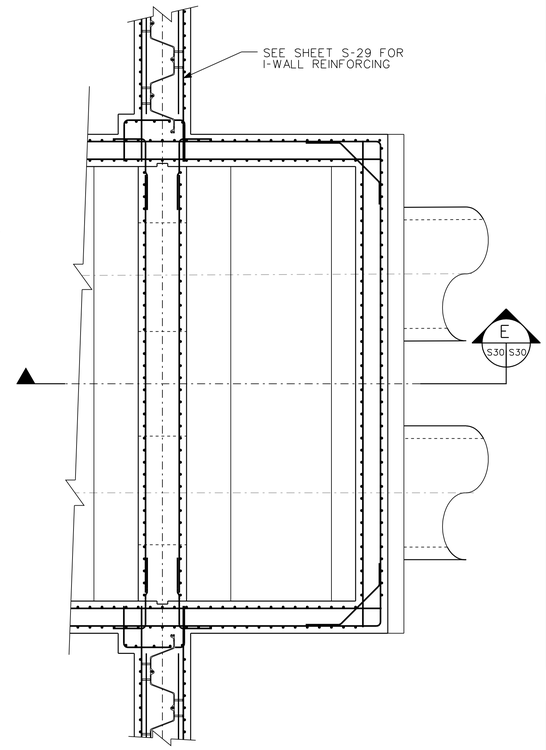

SECTION C
SCALE: 1/8" = 1'-0"

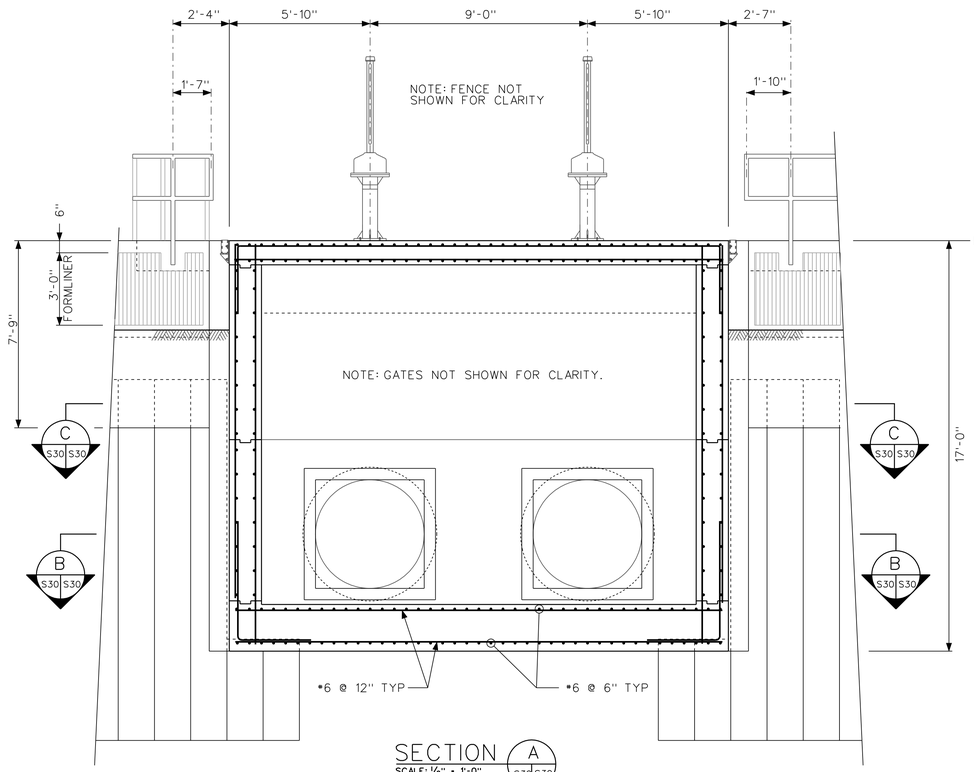

SECTION A
SCALE: 1/8" = 1'-0"

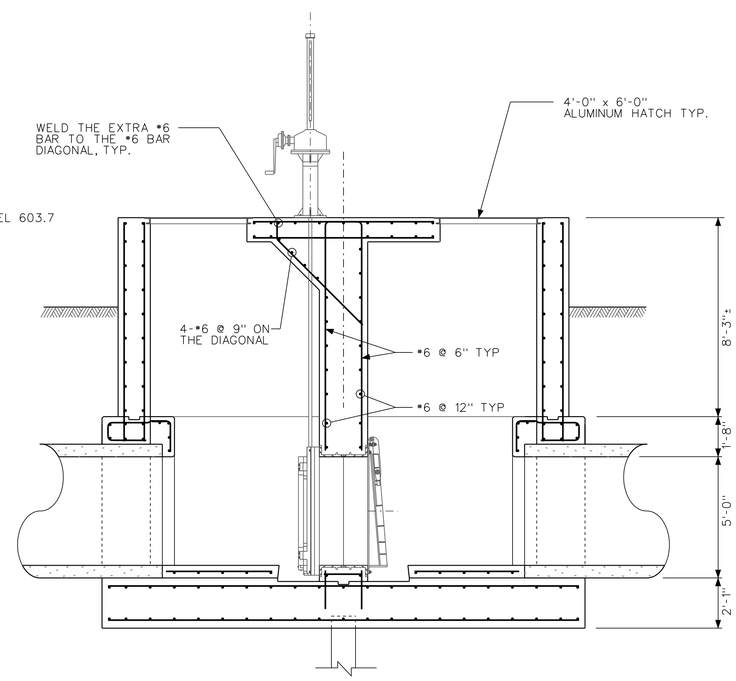

SECTION D
SCALE: 1/8" = 1'-0"

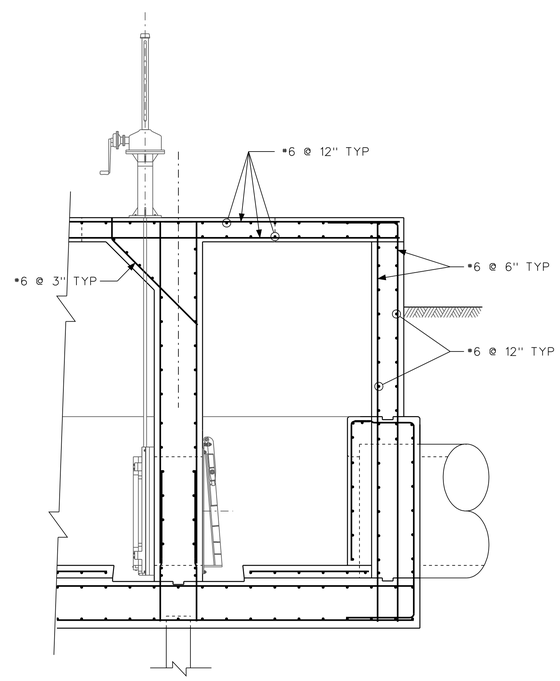

SECTION E
SCALE: 1/8" = 1'-0"

US Army Corps of Engineers
Chicago District

SYMBOL	AMENDMENT DESCRIPTION	DATE APPROVED	SYMBOL	DESCRIPTION	DATE APPROVED

U.S. ARMY ENGINEER DISTRICT
CORPS OF ENGINEERS
CHICAGO, ILLINOIS

DESIGNED BY: EGS | DATE: AUGUST 2007
DRAWN BY: EGS | SCALE: AS SHOWN
CHECKED BY: JJS | SOLICITATION NUMBER: W912P6-07-B-0006
SUBMITTED BY: STEVE TREHARNE | DATE:

LITTLE CALUMET RIVER, INDIANA
LOCAL FLOOD PROTECTION
STAGE V, PHASE 2
KENNEDY AVE DOUBLE 54 INCH
GATEWELL PLAN AND SECTIONS

SHEET REFERENCE NUMBER:
S-30
SHEET 106 OF 138

PLOT DATE: $DATE$
FILENAME: $FILENAME$

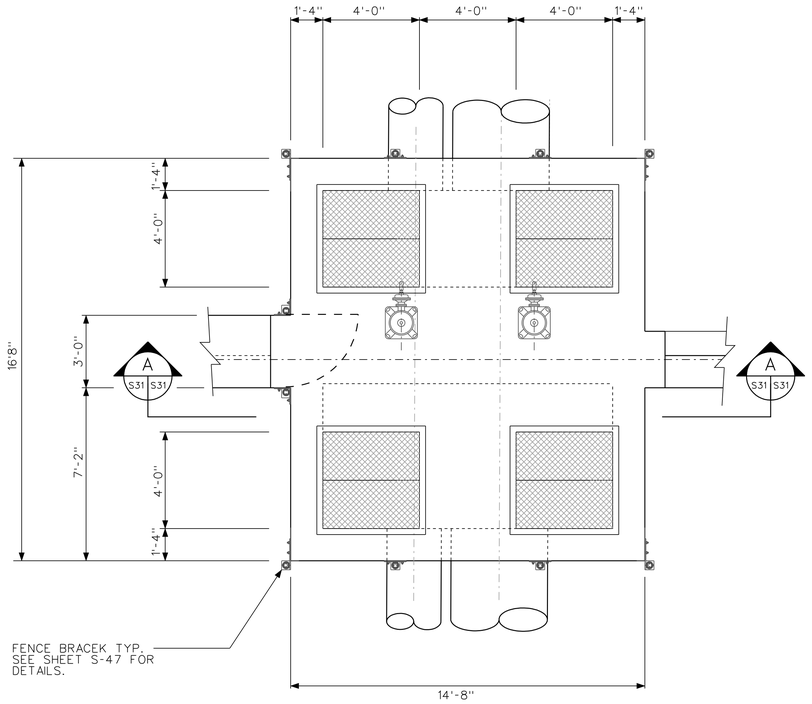

PLAN
SCALE: 1/8" = 1'-0"

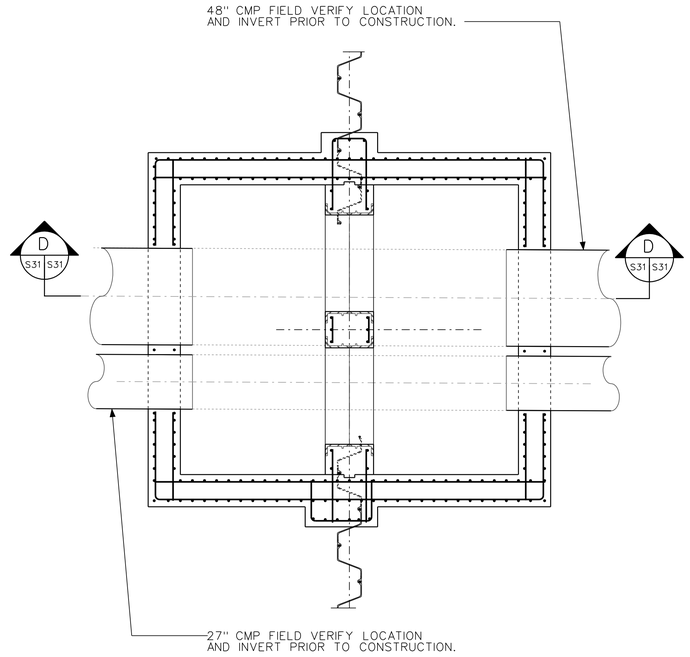

SECTION B
SCALE: 3/8" = 1'-0"

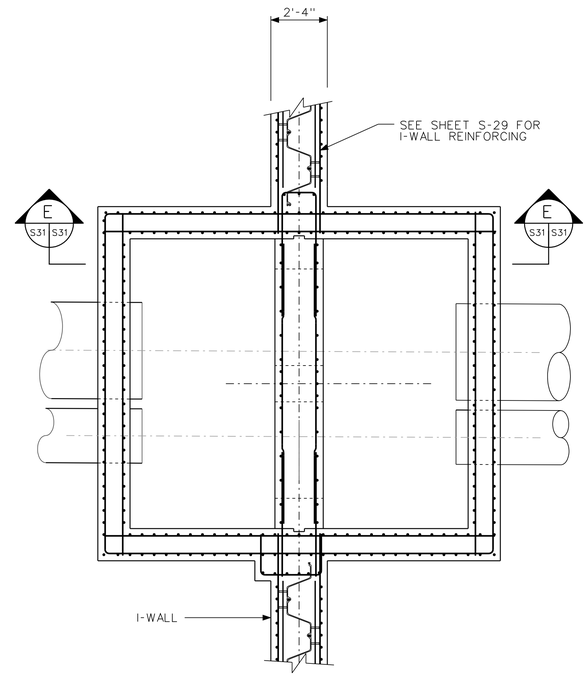

SECTION C
SCALE: 3/8" = 1'-0"

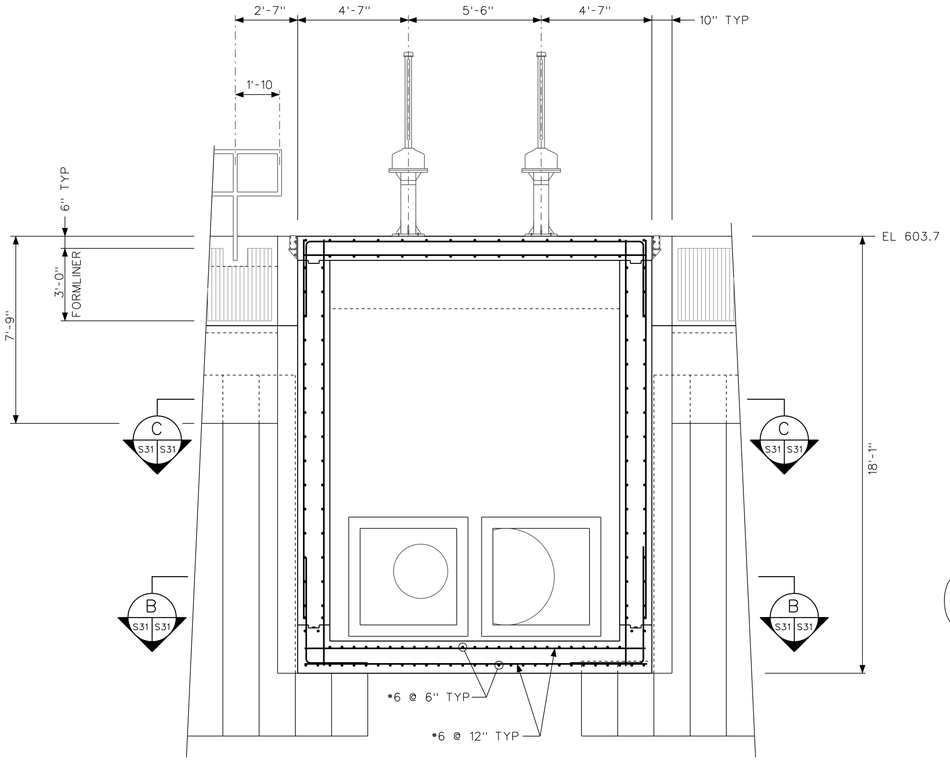

SECTION A
SCALE: 3/8" = 1'-0"

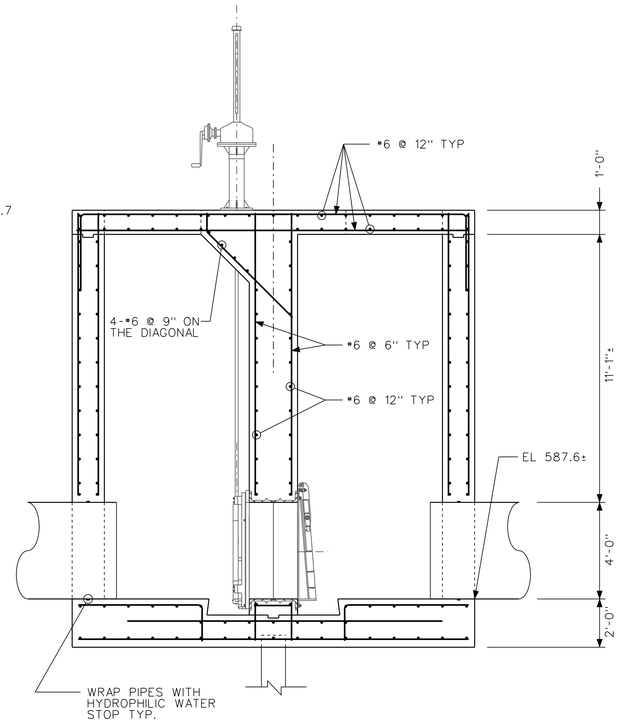

SECTION D
SCALE: 3/8" = 1'-0"

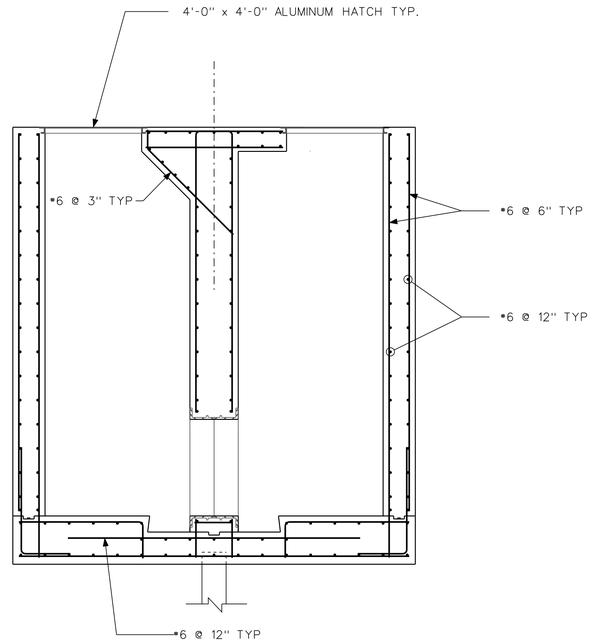

SECTION E
SCALE: 3/8" = 1'-0"

US Army Corps
of Engineers
Chicago District

SYMBOL	AMENDMENT DESCRIPTION	DATE APPROVED	SYMBOL	DESCRIPTION	DATE APPROVED

U.S. ARMY ENGINEER DISTRICT
CORPS OF ENGINEERS
CHICAGO, ILLINOIS

DESIGNED BY: EGS
DRAWN BY: EGS
CHECKED BY: JJS
SUBMITTED BY: STEVE TREHARNE
DATE: AUGUST 2007
SCALE: AS SHOWN
SOLICITATION NUMBER: W912P6-07-B-0006
DATE:

LITTLE CALUMET RIVER, INDIANA
LOCAL FLOOD PROTECTION
STAGE V, PHASE 2
KENNEDY AVE PUMP STATION
OUTFALL PLAN AND SECTIONS

SHEET
REFERENCE
NUMBER:
S-31
SHEET 107 OF 138

PLOT DATE: $DATE$
FILENAME: $FILENAME$

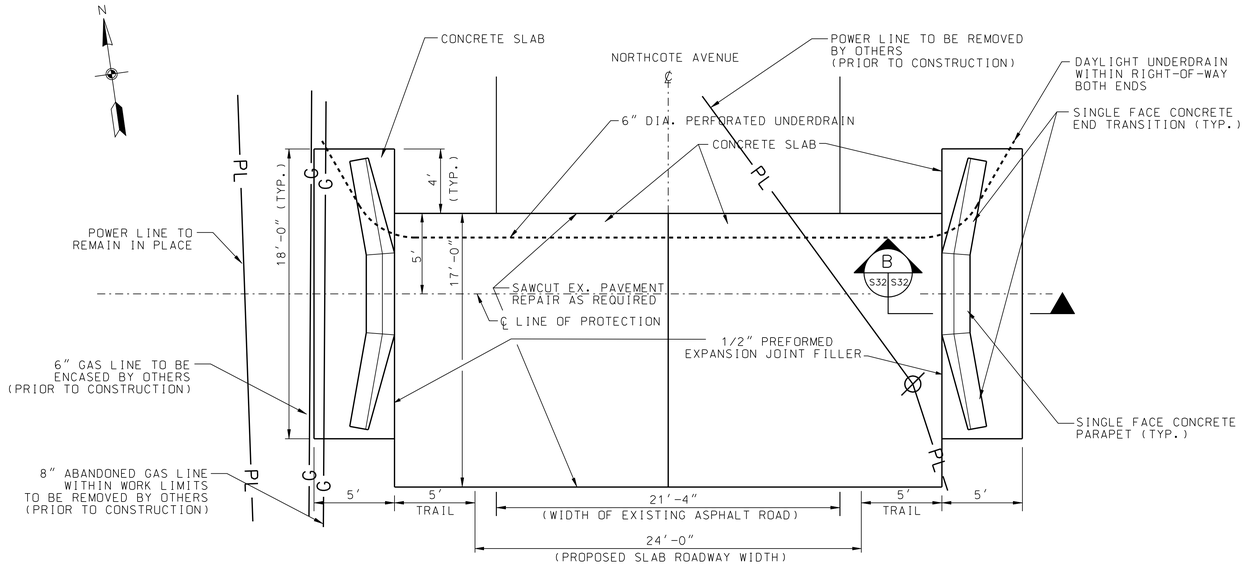

PLAN
SCALE: 1/4" = 1'-0"

NOTES:

1. FOR LOCATION OF CLOSURE STRUCTURE, SEE CIVIL SHEET C-11.
2. DOWELS SHALL BE 1-1/4" IN DIAMETER, 18" LONG AND PLACED 15" ON CENTER AT MID-DEPTH IN THE NEW SECTION OF CONCRETE. ONE HALF OF EACH DOWEL SHALL BE ANCHORED IN THE EXISTING CONCRETE, THE OTHER HALF SHALL BE PAINTED AND OILED.
3. GRANULAR BASE MATERIAL SHALL BE WELL-GRADED WITH ENOUGH FINES TO DECREASE THE PERMEABILITY TO THE RANGE OF 10E-04 TO 10E-05 CM/SEC. FINES SHALL BE ROCK SCREENINGS (CHOKER STONE) NOT CLAY AND SILT.

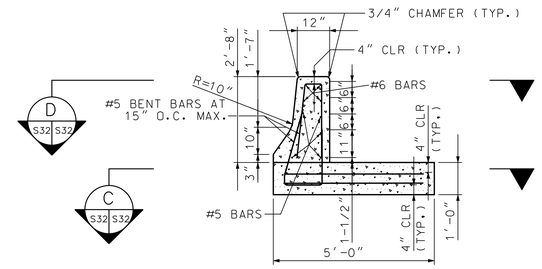

SECTION B S32 S32
NTS

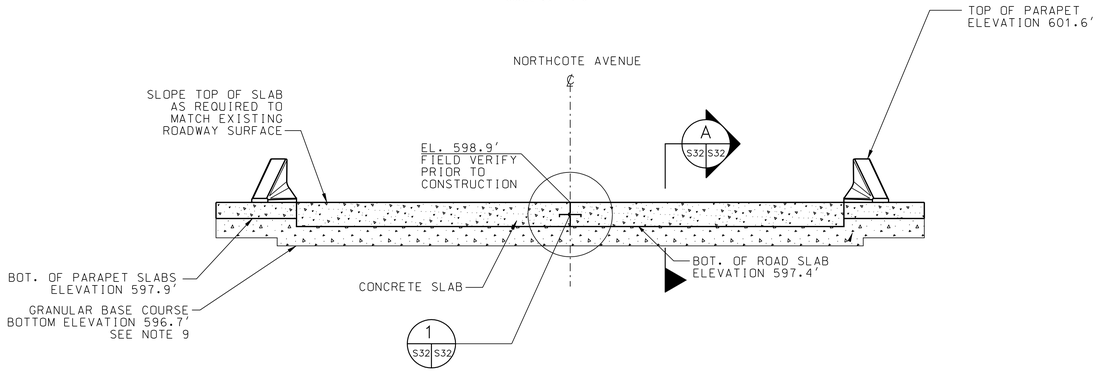

PROFILE
SCALE: 1/4" = 1'-0"

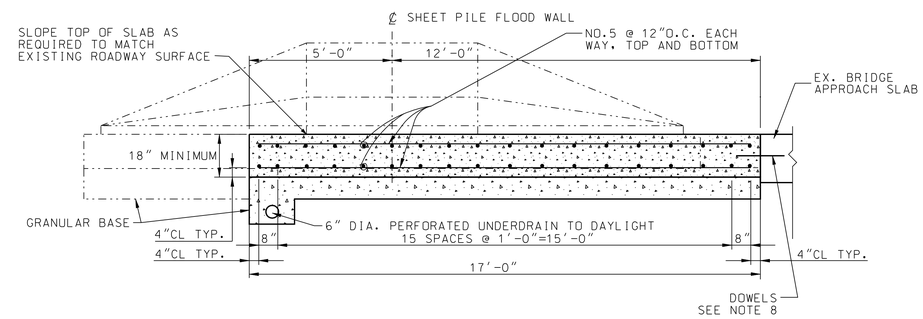

SECTION A S32 S32
NTS

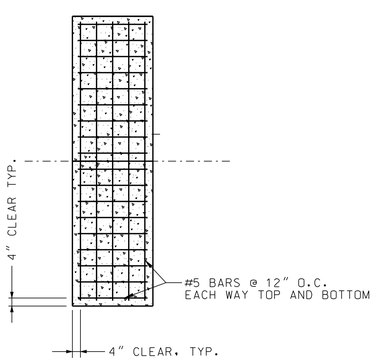

SECTION C S32 S32
NTS

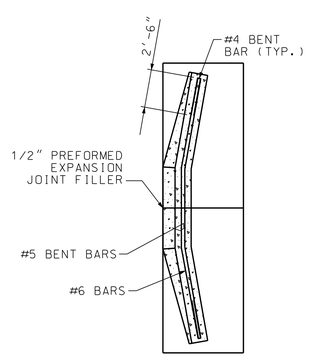

SECTION D S32 S32
NTS

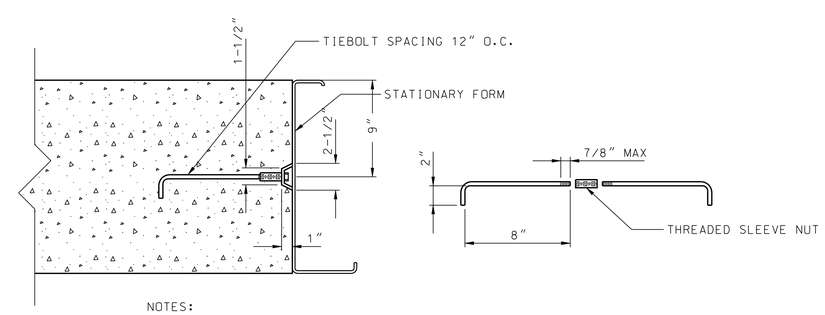

NOTES:

1. TIEBOLTS SHALL BE 9/16" DIA. BAR WITH ROLLED THREADS OR 5/8" DIA. BAR WITH CUT THREADS. THE ASSEMBLED TIEBOLTS SHALL WITHSTAND A MINIMUM PULLOUT OR YIELDING LOAD OF 15,000 POUNDS. ONLY TIEBOLTS WHICH ARE SUPPLIED BY A C.O.E. APPROVED MANUFACTURER WILL BE PERMITTED.
2. MAKE THREADED SLEEVE NUT FROM STEEL PIPE OR HEXAGONAL STEEL BAR 1-1/16" DIA. x 1-7/8" LONG OR HIGH STRENGTH STEEL BAR 27/32" DIA. x 2" LONG.

DETAIL 1 S32 S32
NTS

US Army Corps of Engineers
Chicago District

SYMBOL	AMENDMENT DESCRIPTION	DATE APPROVED	SYMBOL	DESCRIPTION	DATE APPROVED

DESIGNED BY: EGS
DRAWN BY: EGS
DATE: AUGUST 2007
SCALE: AS SHOWN
CHECKED BY: JJS
SOLICITATION NUMBER: W912P6-07-B-0006
STEVE TREHARNE
SUBMITTED BY:
DATE:

U.S. ARMY ENGINEER DISTRICT
CORPS OF ENGINEERS
CHICAGO, ILLINOIS

SENATE ENGINEERING COMPANY
CONSULTING ENGINEERS
PITTSBURGH, PENNSYLVANIA

LITTLE CALUMET RIVER, INDIANA
LOCAL FLOOD PROTECTION
STAGE V, PHASE 2

NORTHCOTE SANDBAG CLOSURE
PLAN, ELEVATION, AND SECTIONS

SHEET REFERENCE NUMBER:
S-32
SHEET 108 OF 138

PLOT DATE: $DATE$
FILENAME: $FILENAME$

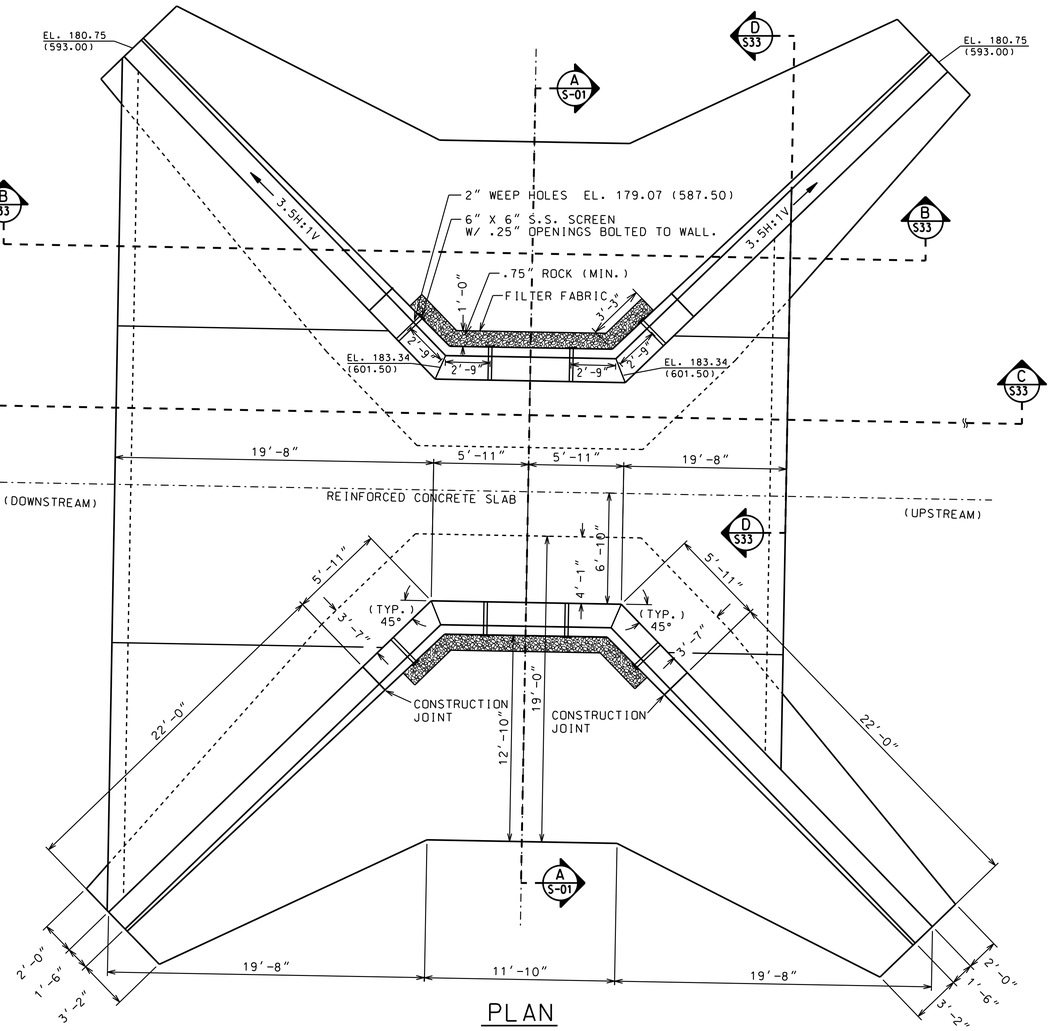

PLAN

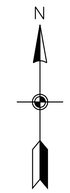

NOTES:
1. THE CONTROL STRUCTURE IS SYMMETRICAL ABOUT CENTERLINE TO A EAST-WEST CENTERLINE.

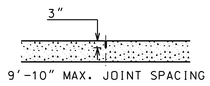

CONTRACTION JOINT DETAIL

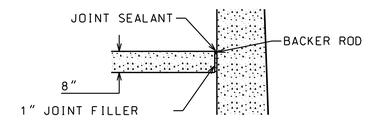

EXPANSION JOINT DETAIL

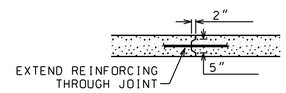

CONSTRUCTION JOINT DETAIL

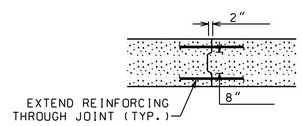

WINGWALL CONSTRUCTION JOINT DETAIL

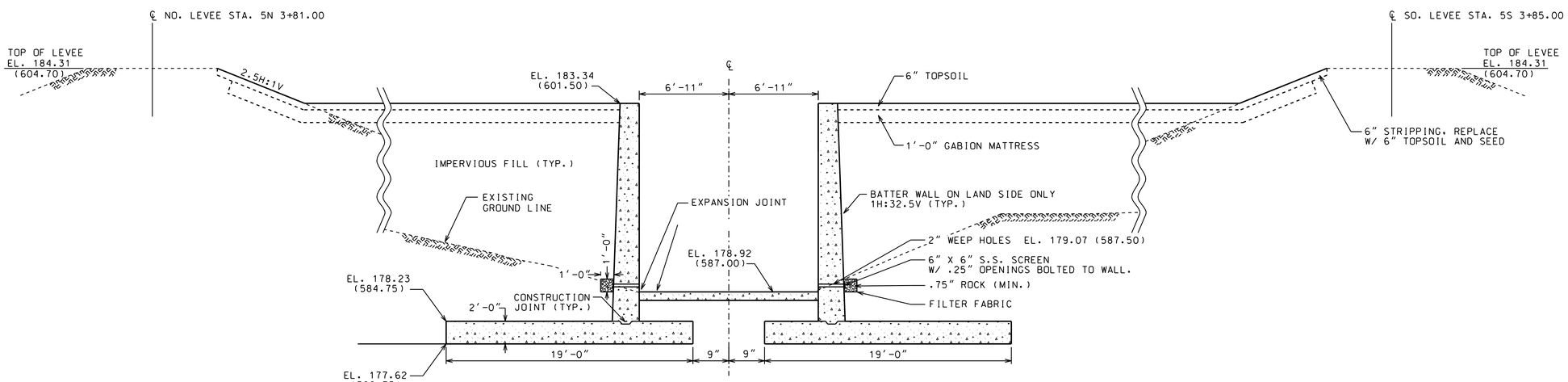

SECTION A S-01

US Army Corps of Engineers
Chicago District

SYMBOL	AMENDMENT DESCRIPTION	DATE APPROVED	SYMBOL	DESCRIPTION	DATE APPROVED

DESIGNED BY: EGS
DATE: AUGUST 2007
DRAWN BY: EGS
SCALE: AS SHOWN
CHECKED BY: JJS
SOLICITATION NUMBER: W912P6-07-B-0006
SUBMITTED BY: STEVE TREHARNE
DATE:

U.S. ARMY ENGINEER DISTRICT
CORPS OF ENGINEERS
CHICAGO, ILLINOIS

RANI ENGINEERING, INC.
556 RICE ST., ST. PAUL, MN 55103
(612) 225-9789

LITTLE CALUMET RIVER, INDIANA
LOCAL FLOOD PROTECTION
STAGE V, PHASE 2

HART DITCH CONTROL STRUCTURE
PLAN AND ELEVATION

SHEET REFERENCE NUMBER:
S-33

PLOT DATE: $DATE$
FILENAME: $FILENAME$

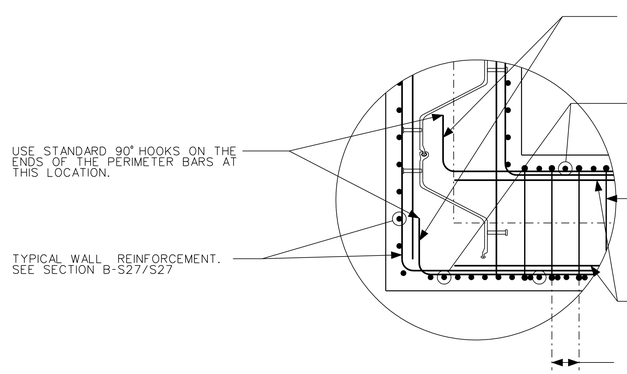

DETAIL 3 (S25/S37)
NTS

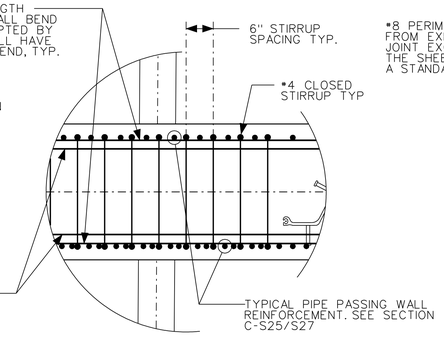

DETAIL 1 (S25/S37) 2 (S25/S37)
NTS

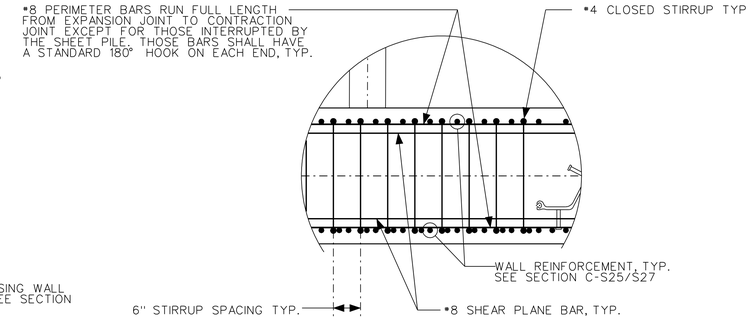

DETAIL 4 (S37/S37) 5 (S37/S37)
NTS

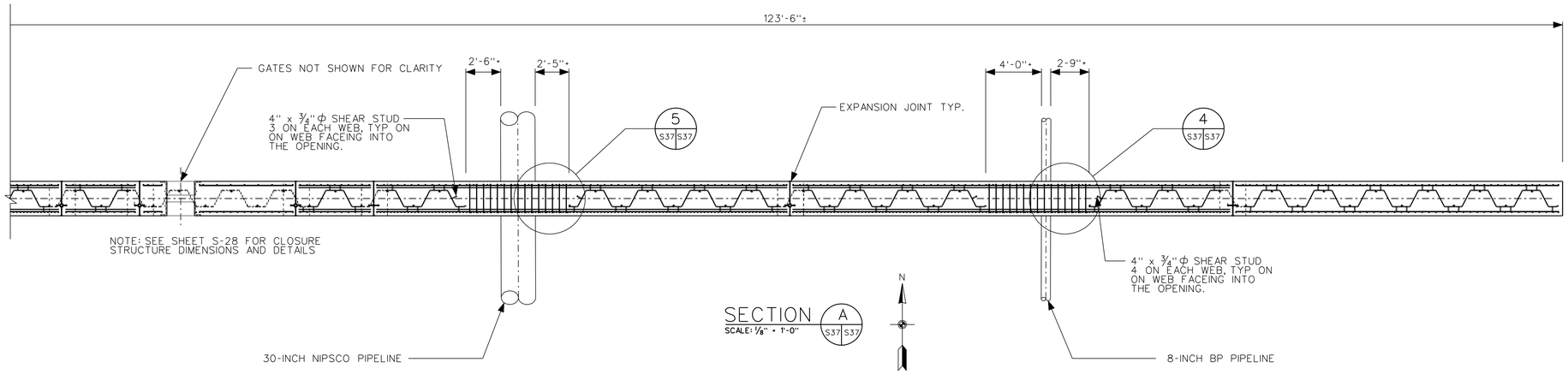

SECTION A (S37/S37)
SCALE: 1/8" = 1'-0"

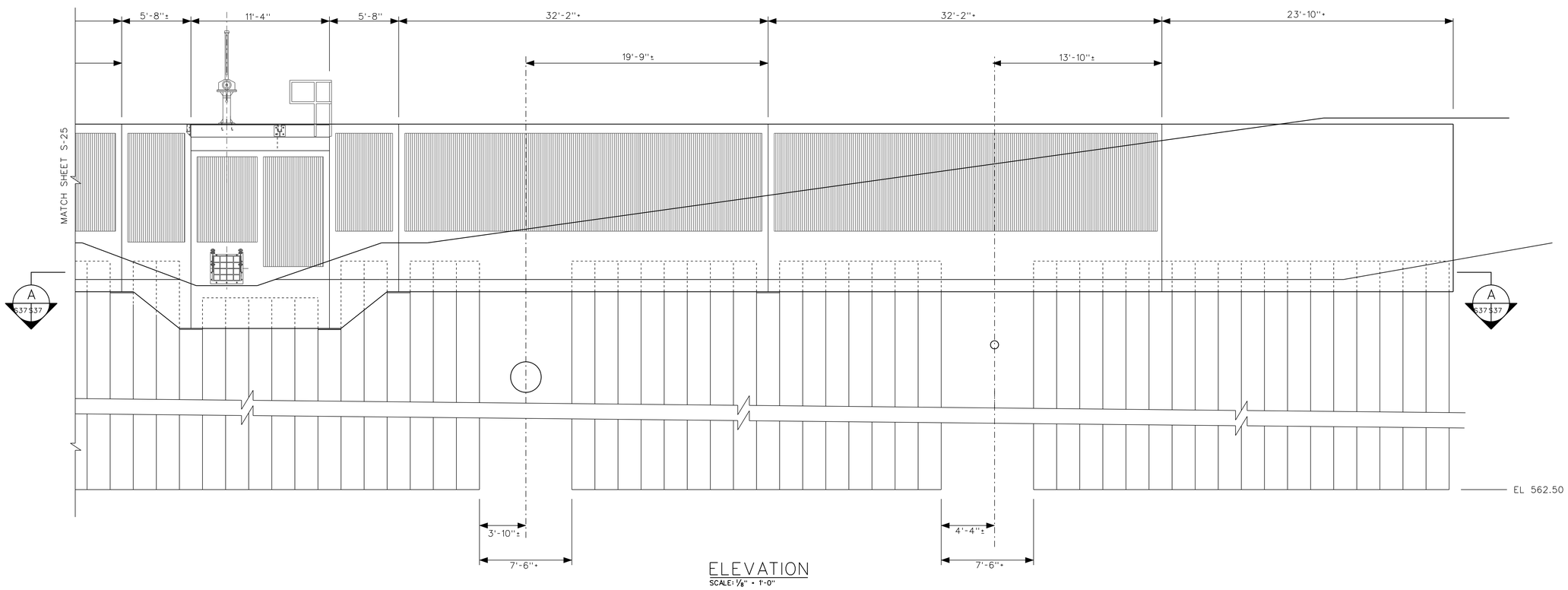

ELEVATION
SCALE: 1/8" = 1'-0"

US Army Corps of Engineers
Chicago District

SYMBOL	AMENDMENT DESCRIPTION	DATE APPROVED	SYMBOL	DESCRIPTION	DATE APPROVED

DESIGNED BY: EGS
DATE: AUGUST 2007
DRAWN BY: EGS
SCALE: AS SHOWN
CHECKED BY: JJS
SOLICITATION NUMBER: W912P6-07-B-0006
SUBMITTED BY: STEVE TREHARNE
DATE:

U.S. ARMY ENGINEER DISTRICT
CORPS OF ENGINEERS
CHICAGO, ILLINOIS

LITTLE CALUMET RIVER, INDIANA
LOCAL FLOOD PROTECTION
STAGE V, PHASE 2
UTILITY CORRIDOR
NORTHEAST SIDE PLAN AND ELEVATION SHEET 2

SHEET REFERENCE NUMBER:
S-37
SHEET 113 OF 138

PLOT DATE: $DATE$
FILENAME: $FILENAME$

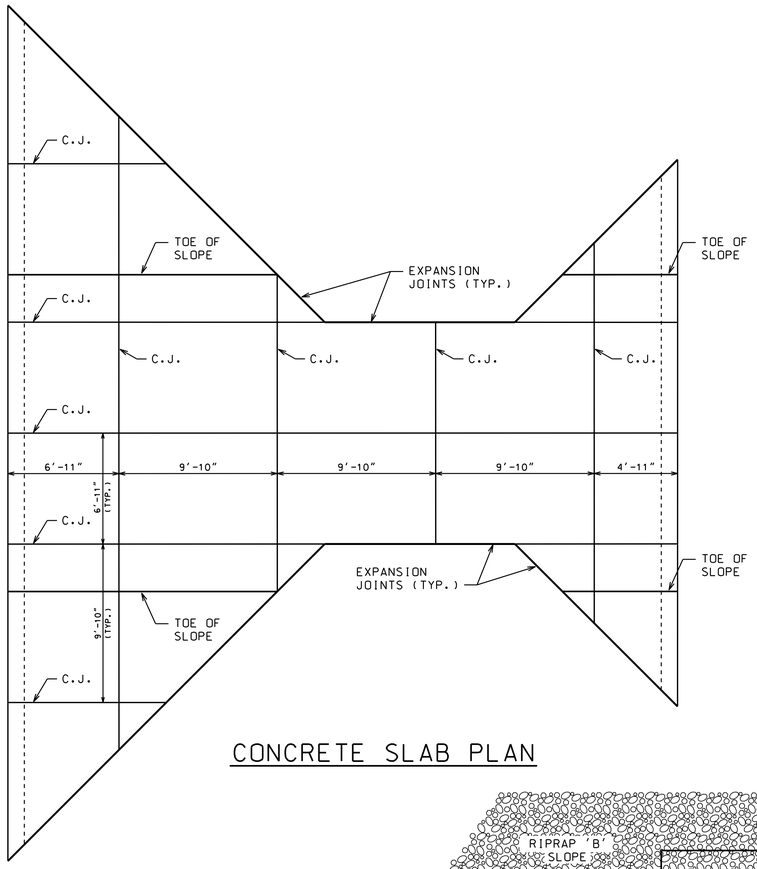

CONCRETE SLAB PLAN

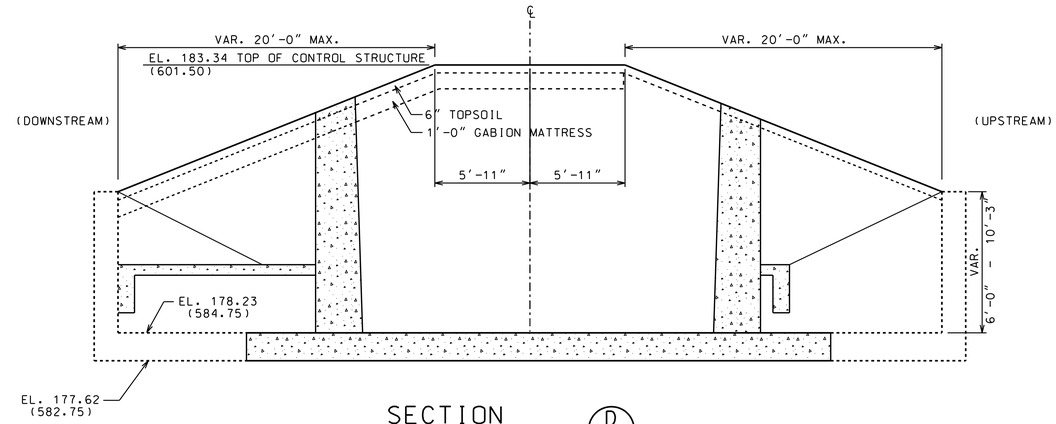

SECTION D S34

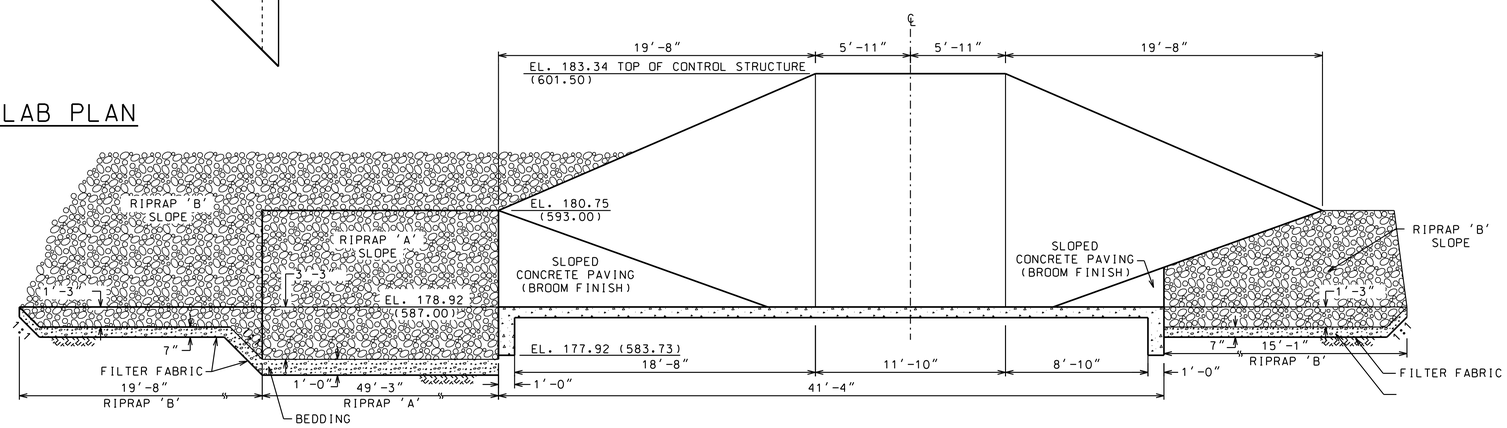

SECTION C S34

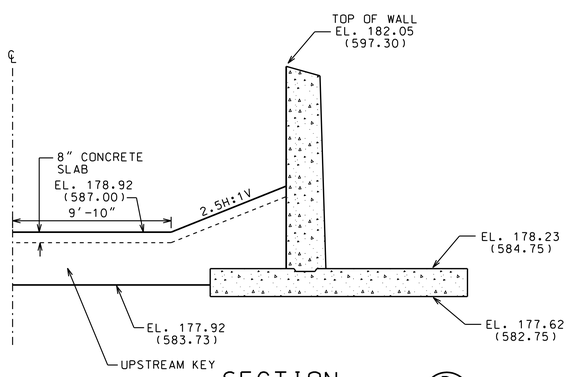

SECTION D S34

NOTE:
1. BEDDING MATERIAL SHALL MEET 1995 INDIANA DEPARTMENT OF TRANSPORTATION (INDOT) STANDARD SPECIFICATIONS 904.02 AGGREGATE SIZE NO. 1.
2. SEE CONSTRUCTION SPECIFICATIONS FOR CONTROL STRUCTURE CONCRETE FINISH.

US Army Corps of Engineers
Chicago District

SYMBOL	AMENDMENT DESCRIPTION	DATE APPROVED	SYMBOL	DESCRIPTION	DATE APPROVED

DESIGNED BY: EGS
DATE: AUGUST 2007
DRAWN BY: EGS
SCALE: AS SHOWN
CHECKED BY: JJS
SOLICITATION NUMBER: W912P6-07-B-0006
SUBMITTED BY: STEVE TREHARNE
DATE:

U.S. ARMY ENGINEER DISTRICT
CORPS OF ENGINEERS
CHICAGO, ILLINOIS

RANI ENGINEERING, INC.
556 RICE ST. - ST. PAUL, MN 55103 (612) 225-9789

LITTLE CALUMET RIVER, INDIANA
LOCAL FLOOD PROTECTION
STAGE V, PHASE 2
HART DITCH CONTROL STRUCTURE DETAILS

SHEET REFERENCE NUMBER:
S-34
SHEET 110 OF 138

PLOT DATE: $DATE$
FILENAME: $FILENAME$

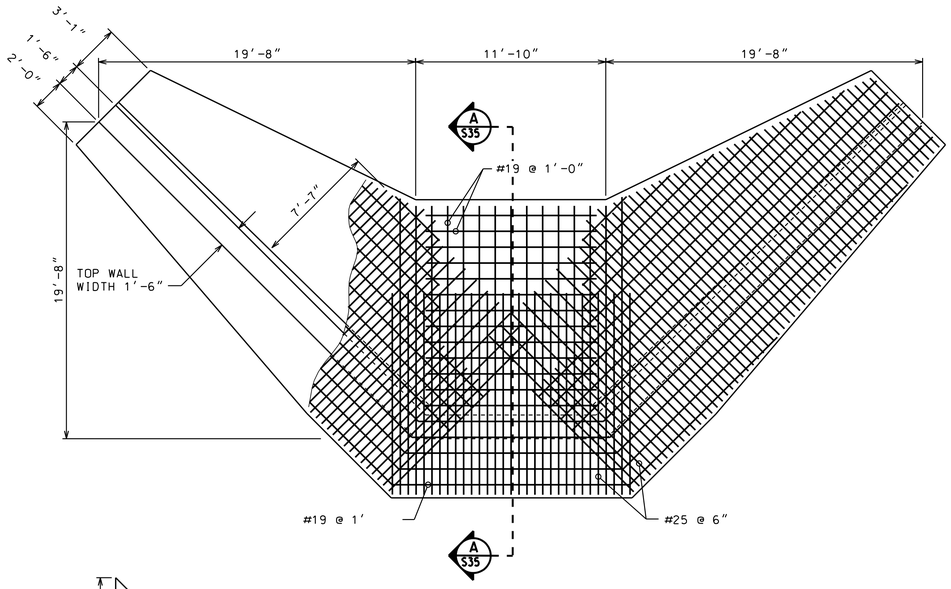

WINGWALL PLAN

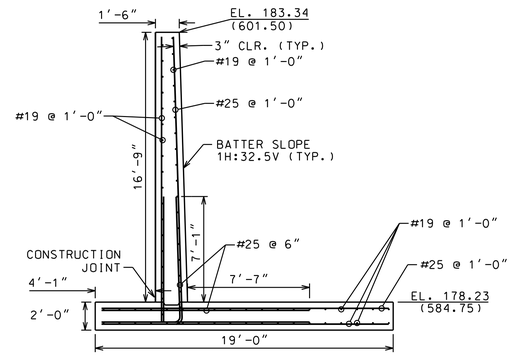

WINGWALL SECTION A S35

NOTES:

1. All bar spacing shown are in feet and are the maximum spacing for the bars.

2. Reinforcing bars not detailed at openings and embedded items shall be shifted, bent or cut as approved by the contracting officer.

3. Reinforcing bars shall be placed to provide 3" of cover unless when cast against earth 4" cover shall be provided.

4. Reinforcing splices may be required that are not shown on these plans. Reinforcement splices shall be located at areas of minimum stress. Splice locations and lengths shall be shown on the reinforcing shop drawings for the contracting officers approval

5. Additional construction joints (horizontal and vertical) shall be submitted with a drawing for the contracting officer approval.

6. Reinforcing splices shall be made in accordance with ACI 318M with minimum laps as tabulated below unless otherwise noted. When two different sizes are spliced, spliced length shall be based on the diameter of the smaller bar. Splice lengths for top bars shall be mulitplied by 1.3.

ENGLISH Bar Size	Splice Length
No. 16	1'-10"
No. 19	2'-3"
No. 22	2'-7"
No. 25	3'-1"

7. All concrete to be 4061.06 PSI at 28 days.

8. Reinforcing bars to have minimum strength of 60045.6 PSI or 414 ASTM A616M Grade 420.

9. Reinforcement hooks and bends shall conform to ACI standard hooks and bends.

10. Prior to placing fresh concrete in contact with existing concrete surfaces, such surfaces shall be thoroughly cleaned by sand blasting. The surfaces shall then be dampened with water and remain damp during concrete placement.

11. Chamfer all exposed corner .75" unless otherwise noted.

12. Abbreviations:
C.J. - Contraction Joint
E.J. - Expansion Joint
CLR. - Clear

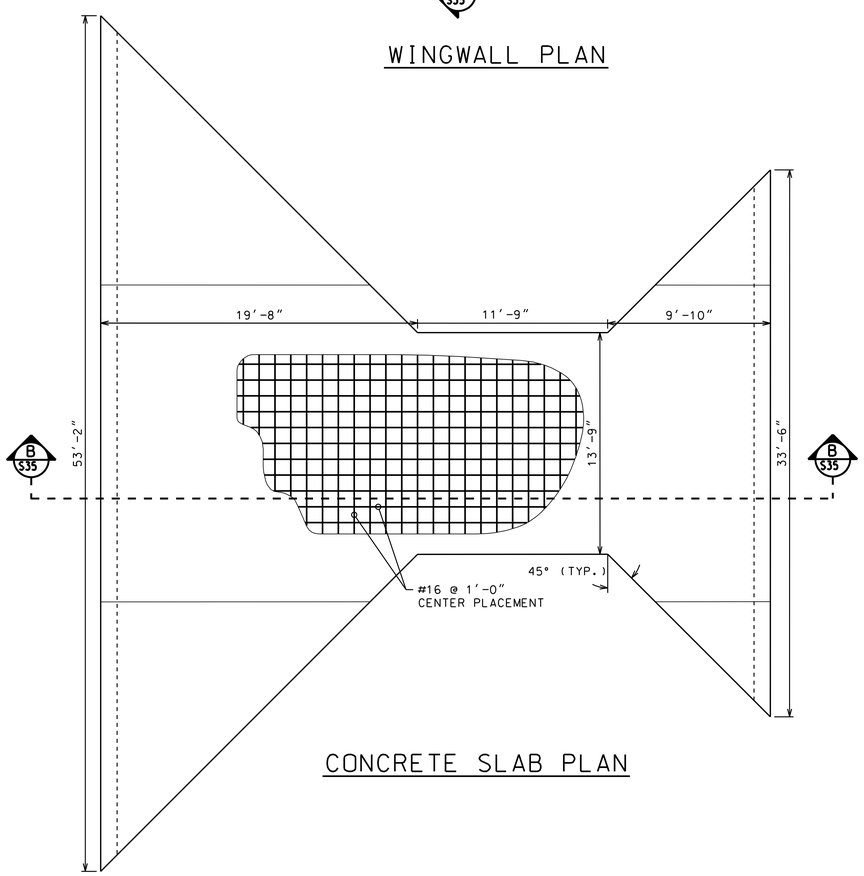

CONCRETE SLAB PLAN

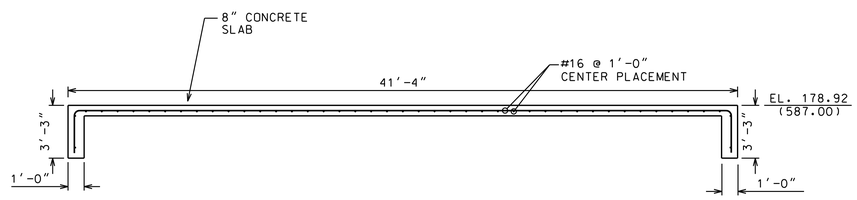

CONCRETE SLAB SECTION B S35

US Army Corps of Engineers
Chicago District

SYMBOL	AMENDMENT DESCRIPTION	DATE APPROVED	SYMBOL	DESCRIPTION	DATE APPROVED

DESIGNED BY: EGS
DRAWN BY: EGS
DATE: AUGUST 2007
SCALE: AS SHOWN
CHECKED BY: JJS
SOLICITATION NUMBER: W912P6-07-B-0006
SUBMITTED BY: STEVE TREHARNE
DATE:

U.S. ARMY ENGINEER DISTRICT
CORPS OF ENGINEERS
CHICAGO, ILLINOIS

RANI ENGINEERING, INC.
556 RICE ST. ST. PAUL, MN
55103 (612) 225-9789

LITTLE CALUMET RIVER, INDIANA
LOCAL FLOOD PROTECTION
STAGE V, PHASE 2

HART DITCH CONTROL STRUCTURE
SECTIONS

SHEET REFERENCE NUMBER:
S-35
SHEET 111 OF 138

PLOT DATE: $DATE$
FILENAME: $FILENAME$

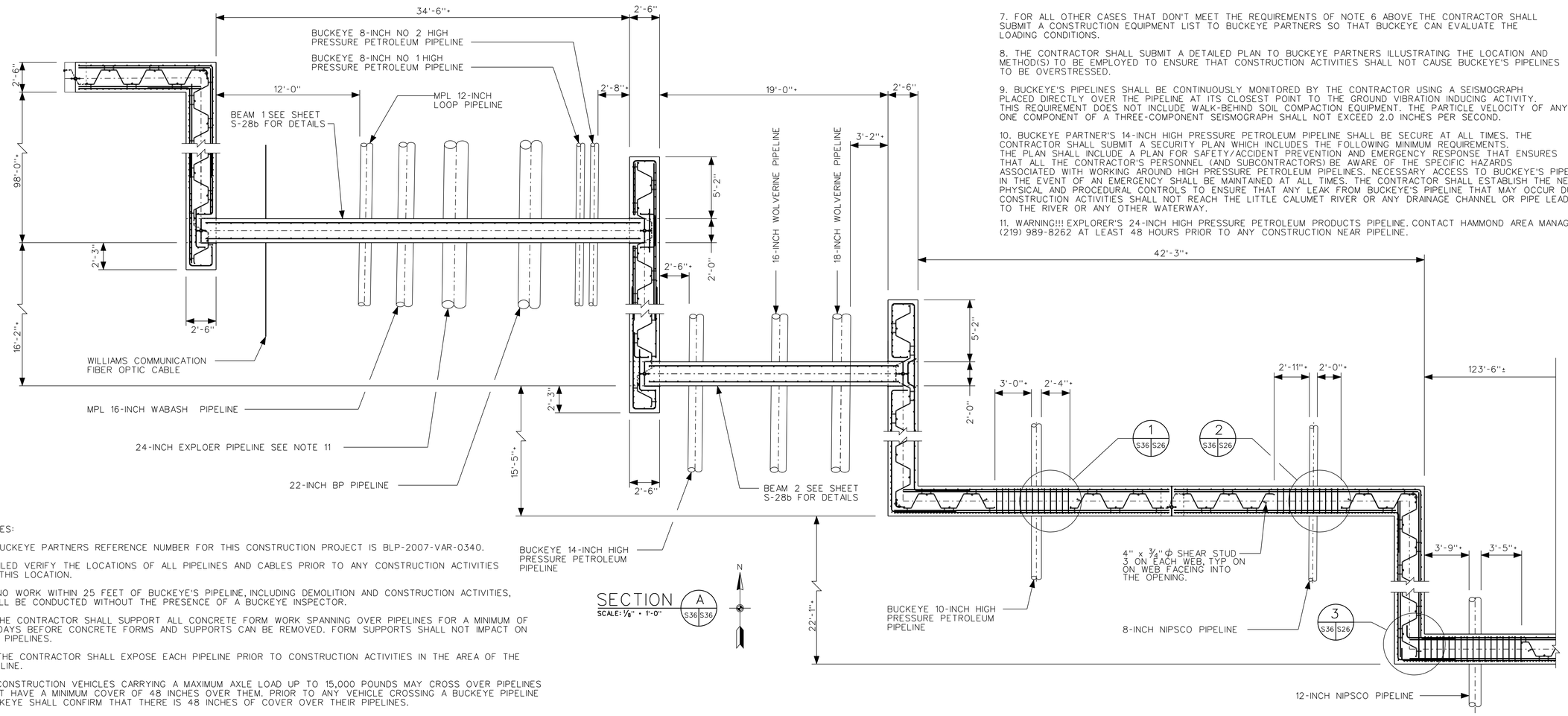

SECTION A S36 S36
SCALE: 1/8" = 1'-0"

NOTES:

1. BUCKEYE PARTNERS REFERENCE NUMBER FOR THIS CONSTRUCTION PROJECT IS BLP-2007-VAR-0340.

2. FILED VERIFY THE LOCATIONS OF ALL PIPELINES AND CABLES PRIOR TO ANY CONSTRUCTION ACTIVITIES AT THIS LOCATION.

3. NO WORK WITHIN 25 FEET OF BUCKEYE'S PIPELINE, INCLUDING DEMOLITION AND CONSTRUCTION ACTIVITIES, SHALL BE CONDUCTED WITHOUT THE PRESENCE OF A BUCKEYE INSPECTOR.

4. THE CONTRACTOR SHALL SUPPORT ALL CONCRETE FORM WORK SPANNING OVER PIPELINES FOR A MINIMUM OF 14 DAYS BEFORE CONCRETE FORMS AND SUPPORTS CAN BE REMOVED. FORM SUPPORTS SHALL NOT IMPACT ON THE PIPELINES.

5. THE CONTRACTOR SHALL EXPOSE EACH PIPELINE PRIOR TO CONSTRUCTION ACTIVITIES IN THE AREA OF THE PIPELINE.

6. CONSTRUCTION VEHICLES CARRYING A MAXIMUM AXLE LOAD UP TO 15,000 POUNDS MAY CROSS OVER PIPELINES THAT HAVE A MINIMUM COVER OF 48 INCHES OVER THEM. PRIOR TO ANY VEHICLE CROSSING A BUCKEYE PIPELINE BUCKEYE SHALL CONFIRM THAT THERE IS 48 INCHES OF COVER OVER THEIR PIPELINES.

NOTES CONTINUED:

7. FOR ALL OTHER CASES THAT DON'T MEET THE REQUIREMENTS OF NOTE 6 ABOVE THE CONTRACTOR SHALL SUBMIT A CONSTRUCTION EQUIPMENT LIST TO BUCKEYE PARTNERS SO THAT BUCKEYE CAN EVALUATE THE LOADING CONDITIONS.

8. THE CONTRACTOR SHALL SUBMIT A DETAILED PLAN TO BUCKEYE PARTNERS ILLUSTRATING THE LOCATION AND METHOD(S) TO BE EMPLOYED TO ENSURE THAT CONSTRUCTION ACTIVITIES SHALL NOT CAUSE BUCKEYE'S PIPELINES TO BE OVERSTRESSED.

9. BUCKEYE'S PIPELINES SHALL BE CONTINUOUSLY MONITORED BY THE CONTRACTOR USING A SEISMOGRAPH PLACED DIRECTLY OVER THE PIPELINE AT ITS CLOSEST POINT TO THE GROUND VIBRATION INDUCING ACTIVITY. THIS REQUIREMENT DOES NOT INCLUDE WALK-BEHIND SOIL COMPACTION EQUIPMENT. THE PARTICLE VELOCITY OF ANY ONE COMPONENT OF A THREE-COMPONENT SEISMOGRAPH SHALL NOT EXCEED 2.0 INCHES PER SECOND.

10. BUCKEYE PARTNER'S 14-INCH HIGH PRESSURE PETROLEUM PIPELINE SHALL BE SECURE AT ALL TIMES. THE CONTRACTOR SHALL SUBMIT A SECURITY PLAN WHICH INCLUDES THE FOLLOWING MINIMUM REQUIREMENTS. THE PLAN SHALL INCLUDE A PLAN FOR SAFETY/ACCIDENT PREVENTION AND EMERGENCY RESPONSE THAT ENSURES THAT ALL THE CONTRACTOR'S PERSONNEL (AND SUBCONTRACTORS) BE AWARE OF THE SPECIFIC HAZARDS ASSOCIATED WITH WORKING AROUND HIGH PRESSURE PETROLEUM PIPELINES. NECESSARY ACCESS TO BUCKEYE'S PIPELINES IN THE EVENT OF AN EMERGENCY SHALL BE MAINTAINED AT ALL TIMES. THE CONTRACTOR SHALL ESTABLISH THE NECESSARY PHYSICAL AND PROCEDURAL CONTROLS TO ENSURE THAT ANY LEAK FROM BUCKEYE'S PIPELINE THAT MAY OCCUR DURING CONSTRUCTION ACTIVITIES SHALL NOT REACH THE LITTLE CALUMET RIVER OR ANY DRAINAGE CHANNEL OR PIPE LEADING TO THE RIVER OR ANY OTHER WATERWAY.

11. WARNING!!! EXPLORER'S 24-INCH HIGH PRESSURE PETROLEUM PRODUCTS PIPELINE. CONTACT HAMMOND AREA MANAGER AT (219) 989-8262 AT LEAST 48 HOURS PRIOR TO ANY CONSTRUCTION NEAR PIPELINE.

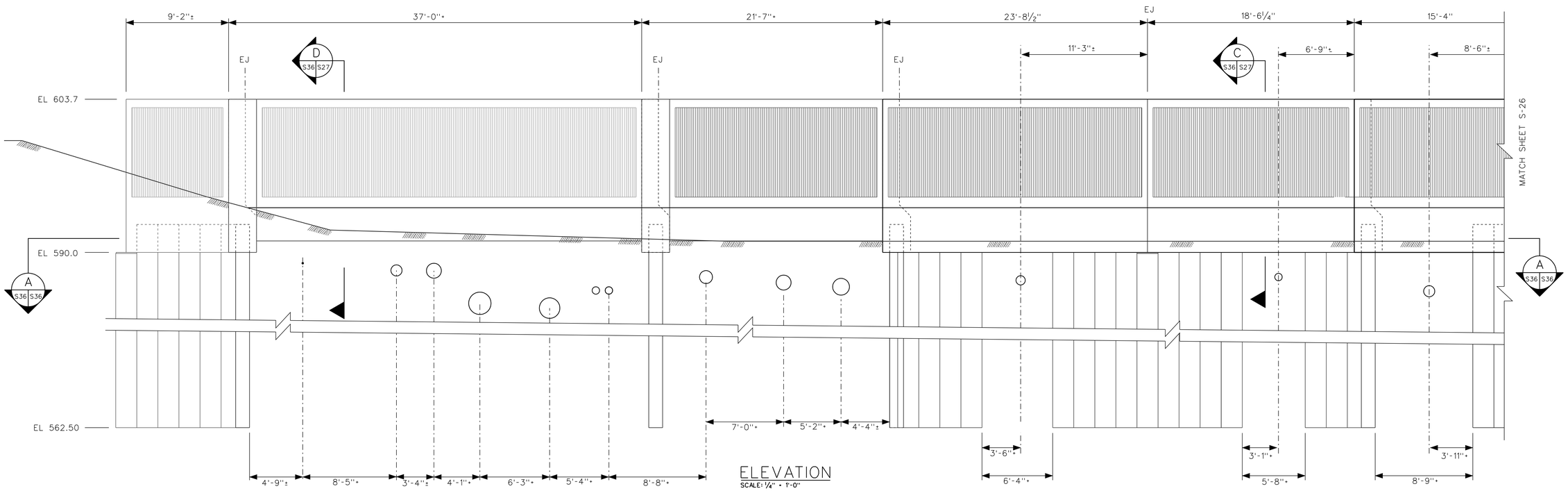

ELEVATION
SCALE: 1/4" = 1'-0"

US Army Corps of Engineers
Chicago District

SYMBOL	AMENDMENT DESCRIPTION	DATE APPROVED	SYMBOL	DESCRIPTION	DATE APPROVED

DESIGNED BY: EGS
DRAWN BY: EGS
CHECKED BY: JJS
SUBMITTED BY: STEVE TREHARNE
DATE: AUGUST 2007
SCALE: AS SHOWN
SOLICITATION NUMBER: W912P6-07-B-0006
DATE:

U.S. ARMY ENGINEER DISTRICT
CORPS OF ENGINEERS
CHICAGO, ILLINOIS

LITTLE CALUMET RIVER, INDIANA
LOCAL FLOOD PROTECTION
STAGE V, PHASE 2
UTILITY CORRIDOR
NORTHEAST SIDE PLAN AND ELEVATION

SHEET REFERENCE NUMBER:
S-36
SHEET 112 OF 138

PLOT DATE: $DATE$
FILENAME: $FILENAME$

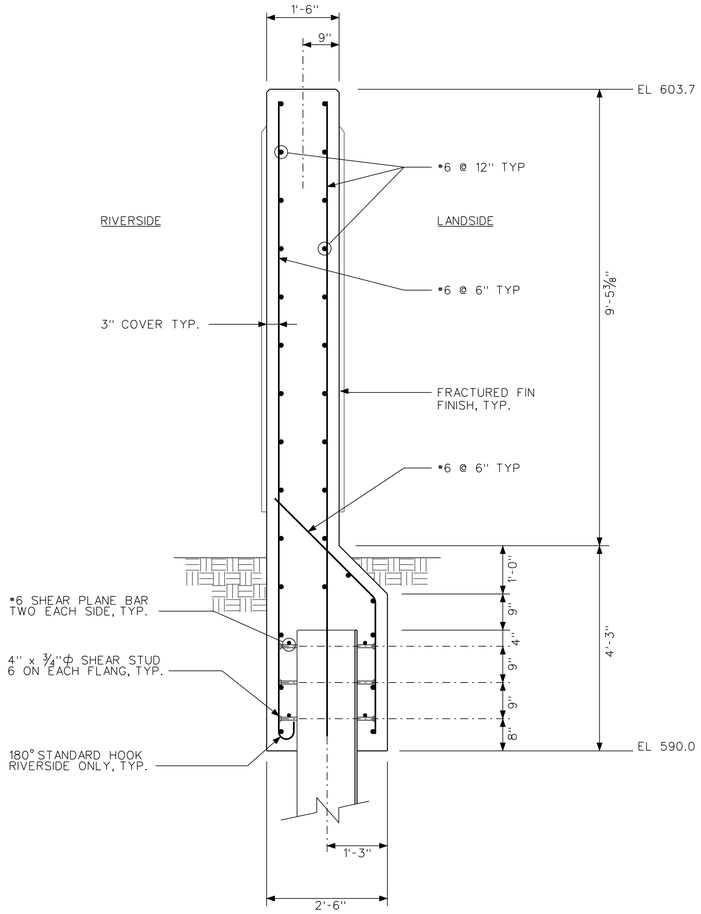

TYPICAL WALL SECTION

SECTION B (S38 | S38)

NTS

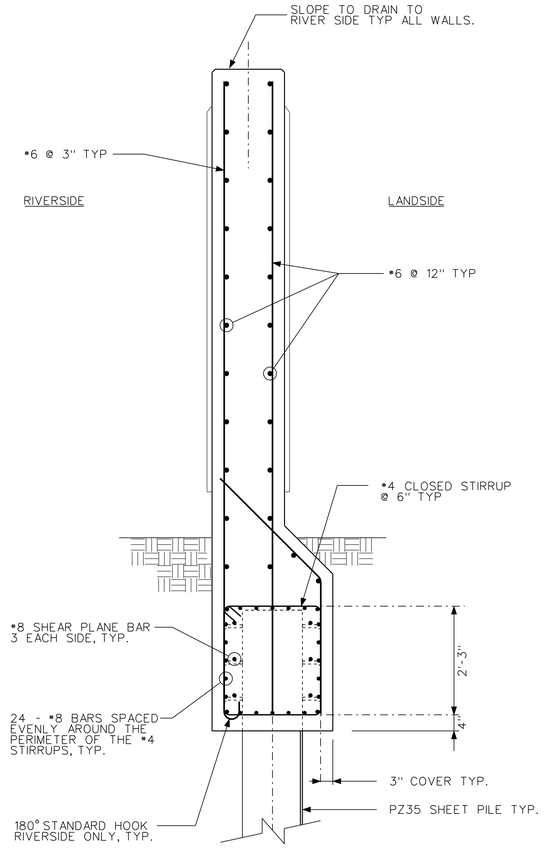

TYPICAL WALL SECTION AT PIPE PASSING

SECTION C (S37 | S38)

NTS

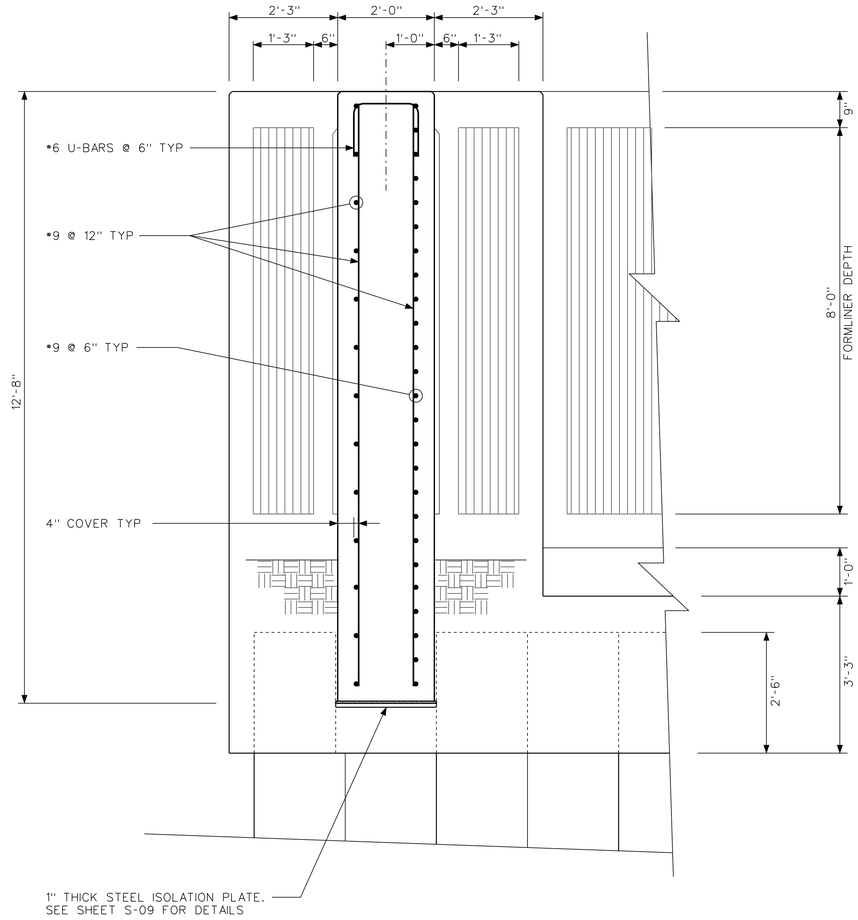

TYPICAL SECTION AT A BRIDGE WALL

SECTION D (S25 | S38)

NTS

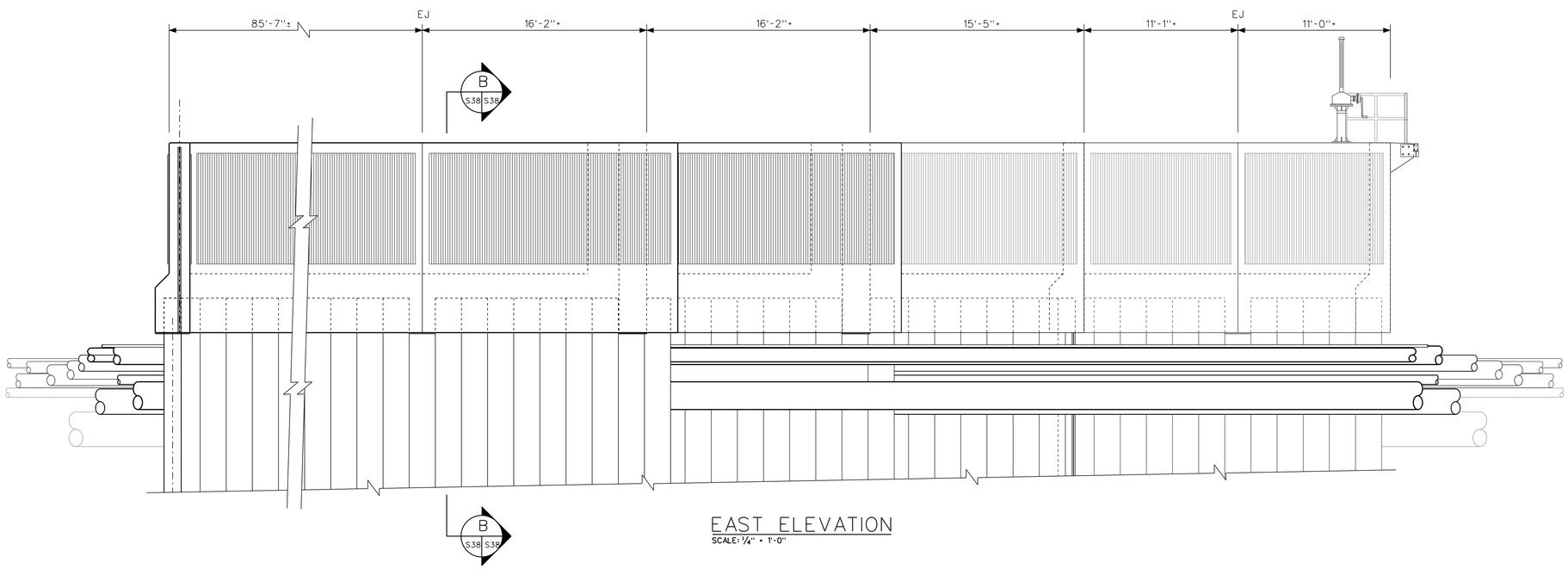

EAST ELEVATION

SCALE: ¼" = 1'-0"

US Army Corps of Engineers
Chicago District

SYMBOL	AMENDMENT DESCRIPTION	DATE APPROVED	SYMBOL	DESCRIPTION	DATE APPROVED

DESIGNED BY: EGS
DATE: AUGUST 2007
DRAWN BY: EGS
SCALE: AS SHOWN
CHECKED BY: JJS
SOLICITATION NUMBER: W912P6-07-B-0006
SUBMITTED BY: STEVE TREHARNE
DATE:

U.S. ARMY ENGINEER DISTRICT
CORPS OF ENGINEERS
CHICAGO, ILLINOIS

LITTLE CALUMET RIVER, INDIANA
LOCAL FLOOD PROTECTION
STAGE V, PHASE 2
UTILITY CORRIDOR
NORTHEAST SIDE
EAST ELEVATION AND SECTIONS

SHEET REFERENCE NUMBER:
S-38

PLOT DATE: $DATE$
FILENAME: $FILENAME$

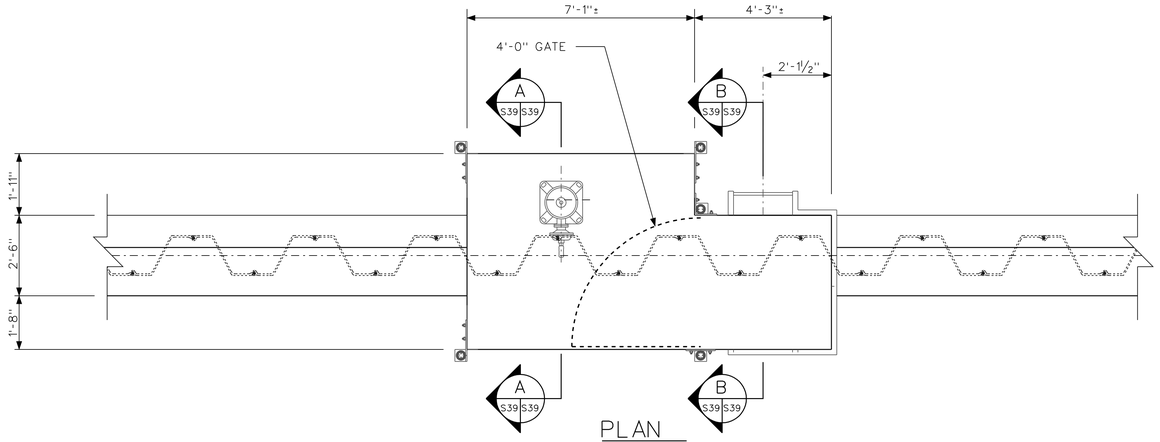

PLAN
SCALE: ½" = 1'-0"

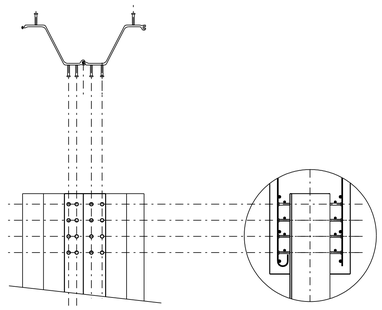

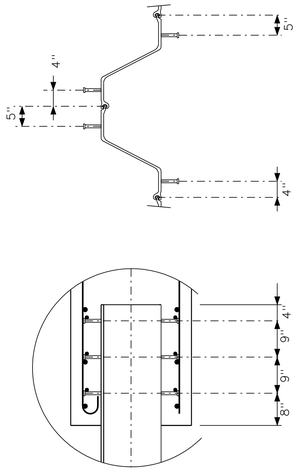

DETAIL 1 (S39 S39)
NTS

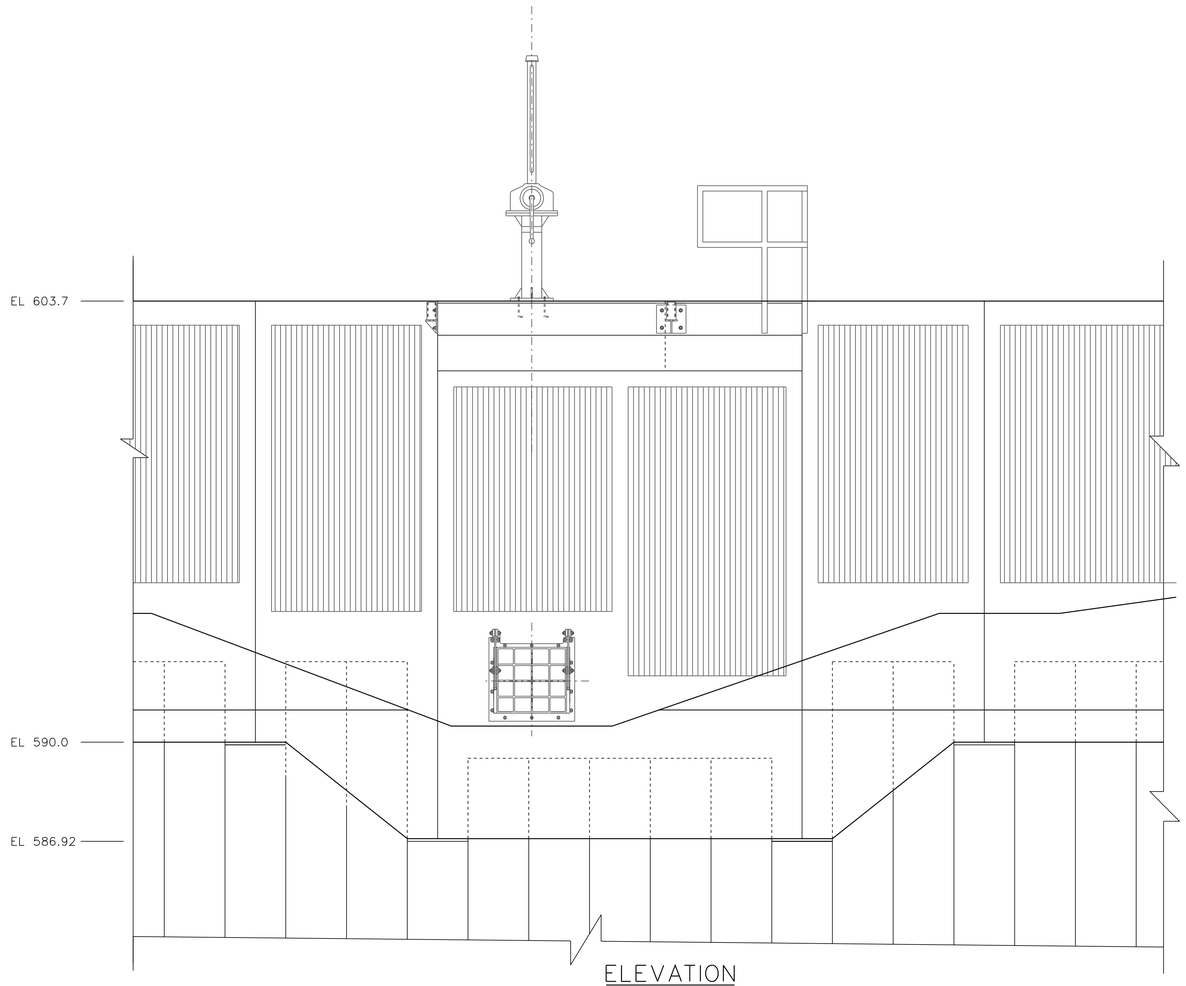

ELEVATION
SCALE: ½" = 1'-0"

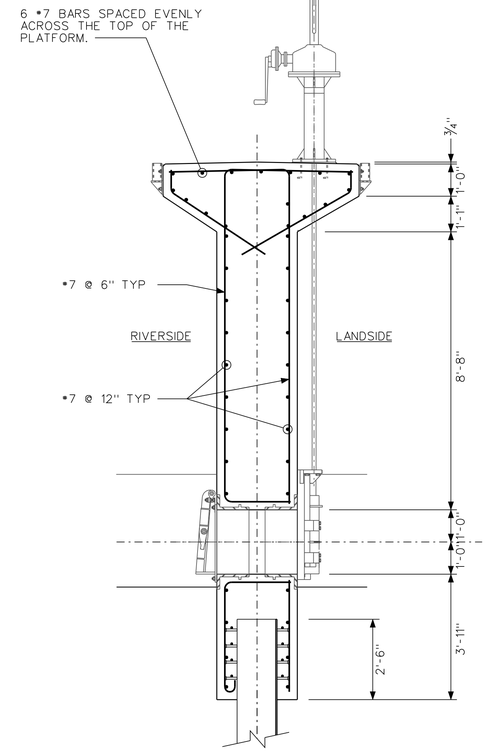

SECTION A (S39 S39)
SCALE: ½" = 1'-0"

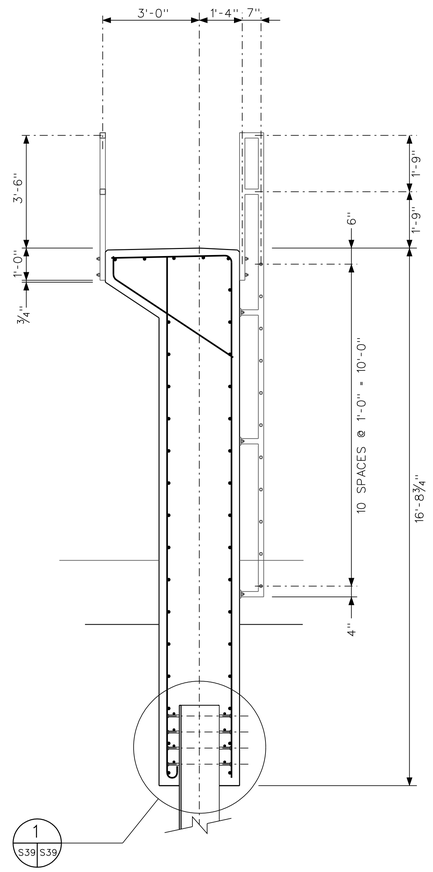

SECTION B (S39 S39)
SCALE: ½" = 1'-0"

US Army Corps of Engineers
Chicago District

SYMBOL	AMENDMENT DESCRIPTION	DATE APPROVED	SYMBOL	DESCRIPTION	DATE APPROVED

DESIGNED BY: EGS
DATE: AUGUST 2007
DRAWN BY: EGS
SCALE: AS SHOWN
CHECKED BY: JJS
SOLICITATION NUMBER: W912P6-07-B-0006
SUBMITTED BY: STEVE TREHARNE
DATE:

U.S. ARMY ENGINEER DISTRICT
CORPS OF ENGINEERS
CHICAGO, ILLINOIS

LITTLE CALUMET RIVER, INDIANA
LOCAL FLOOD PROTECTION
STAGE V, PHASE 2
UTILITY CORRIDOR
NORTHEAST SIDE
24" CLOSURE STRUCTURE

SHEET REFERENCE NUMBER:
S-39
SHEET 115 OF 138

PLOT DATE: $DATE$
FILENAME: $FILENAME$

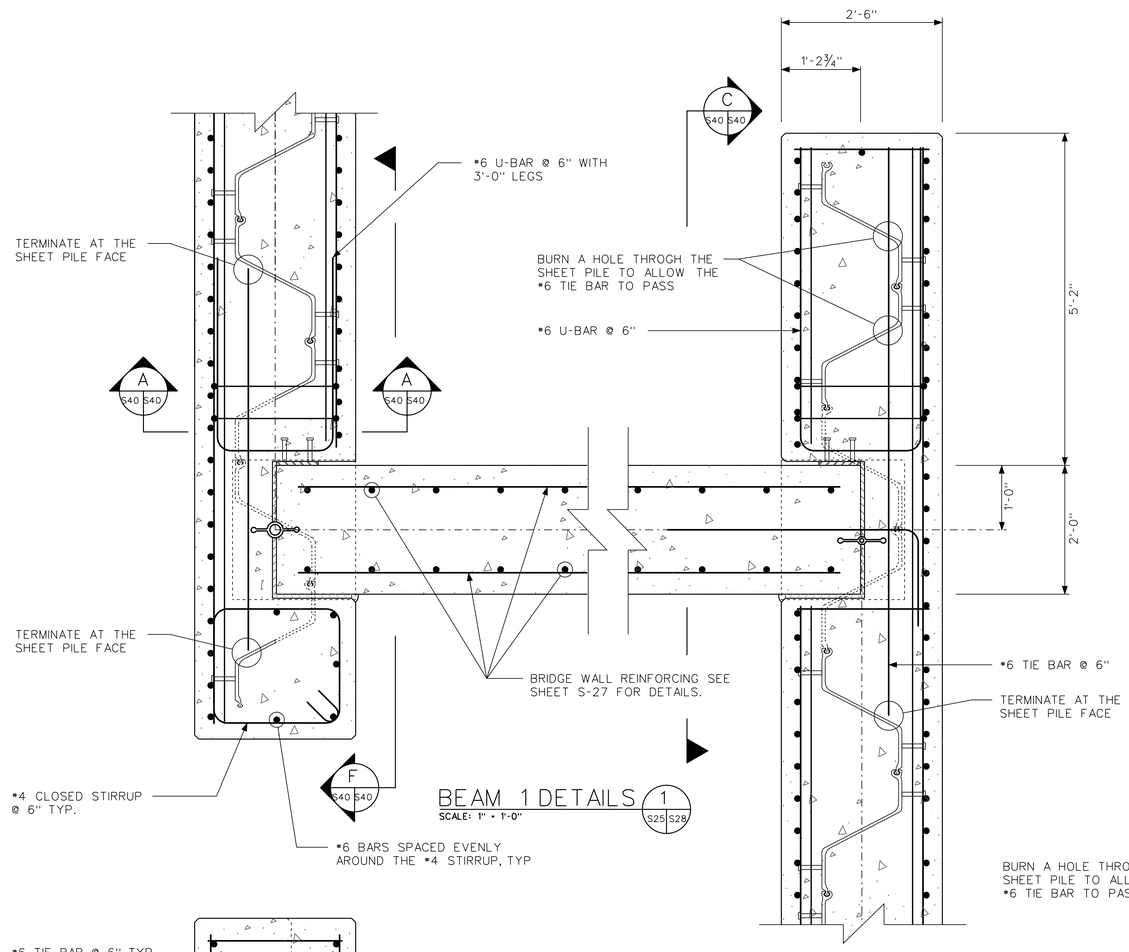

BEAM 1 DETAILS (1 / S25 S28)
SCALE: 1" = 1'-0"

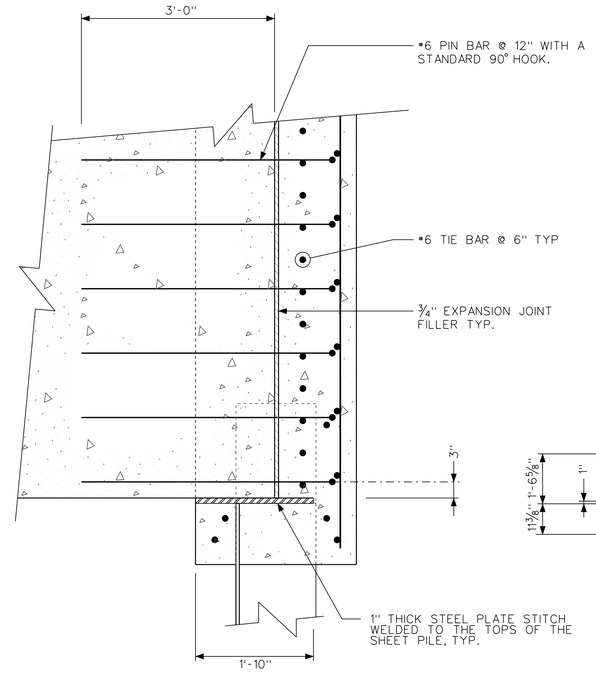

SECTION (B / S40 S40)
SCALE: 1" = 1'-0"

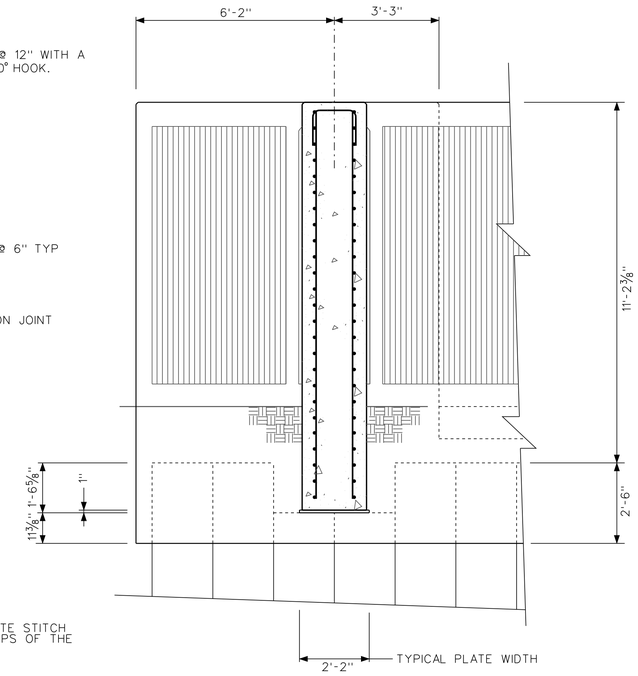

SECTION (C / S40 S40 — E / S40 S40)
SCALE: ½" = 1'-0"

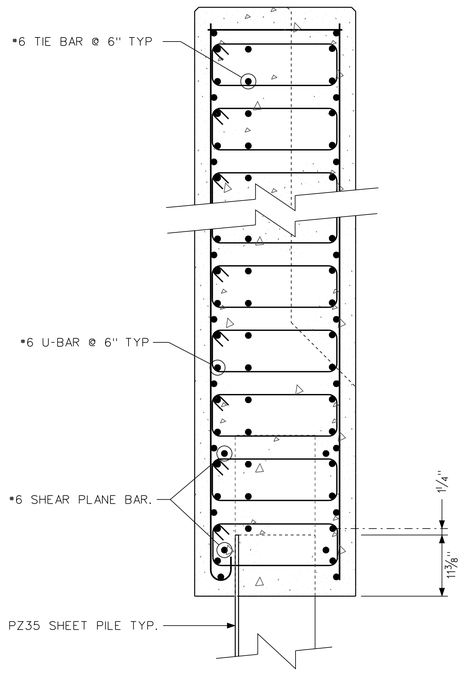

SECTION (A / S40 S40)
SCALE: 1" = 1'-0"

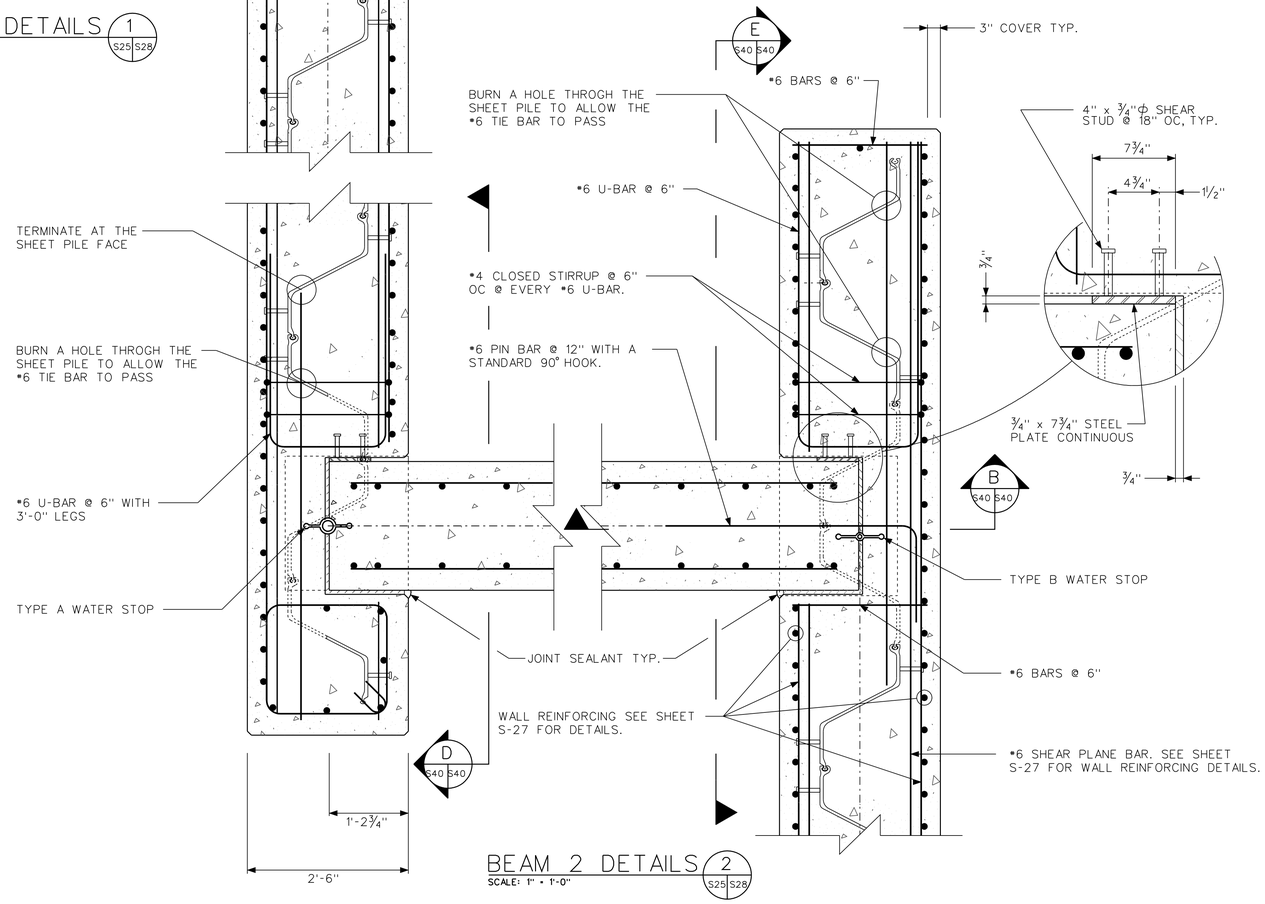

BEAM 2 DETAILS (2 / S25 S28)
SCALE: 1" = 1'-0"

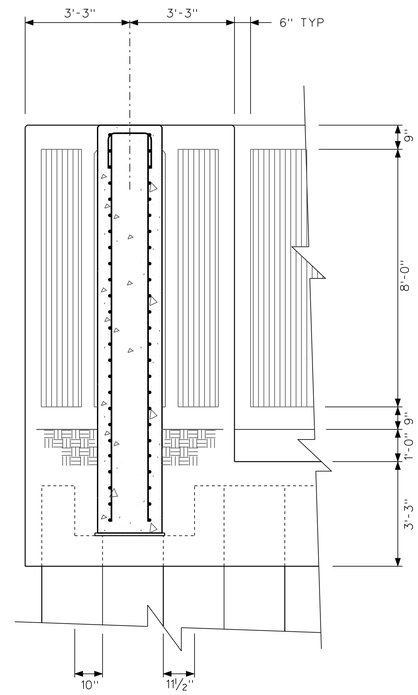

SECTION (D / S40 S40 — F / S40 S40)
SCALE: ½" = 1'-0"

US Army Corps of Engineers
Chicago District

SYMBOL	AMENDMENT DESCRIPTION	DATE APPROVED	SYMBOL	DESCRIPTION	DATE APPROVED

DESIGNED BY: EGS
DATE: AUGUST 2007
DRAWN BY: EGS
SCALE: AS SHOWN
CHECKED BY: JJS
SOLICITATION NUMBER: W912P6-07-B-0006
STEVE TREHARNE
SUBMITTED BY:
DATE:

U.S. ARMY ENGINEER DISTRICT
CORPS OF ENGINEERS
CHICAGO, ILLINOIS

LITTLE CALUMET RIVER, INDIANA
LOCAL FLOOD PROTECTION
STAGE V, PHASE 2

UTILITY CORRIDOR NORTHEAST
SECTIONS AND DETAILS

SHEET REFERENCE NUMBER:
S-40
SHEET 116 OF 138

PLOT DATE: $DATE$
FILENAME: $FILENAME$

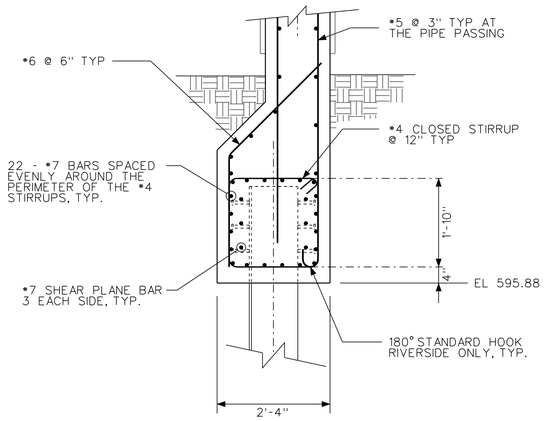

SECTION D (S41 | S41)
SCALE: 3/4" = 1'-0"

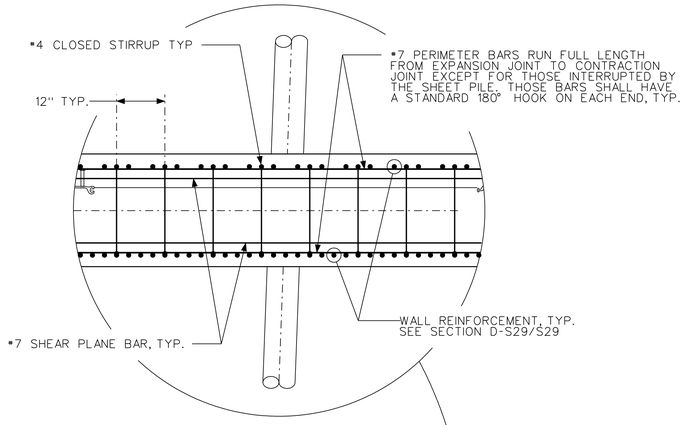

NOTE: THIS DETAIL GOOD FOR BOTH NW PIPE PASSINGS.

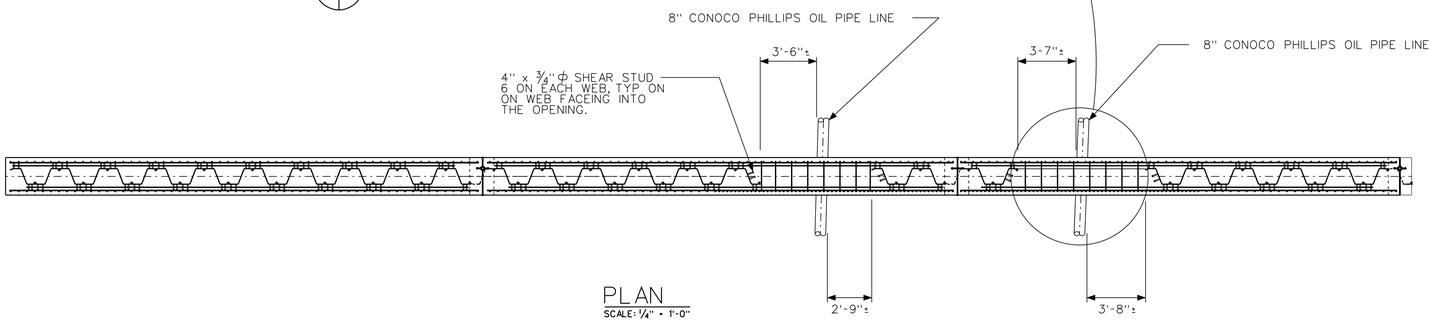

PLAN
SCALE: 1/4" = 1'-0"

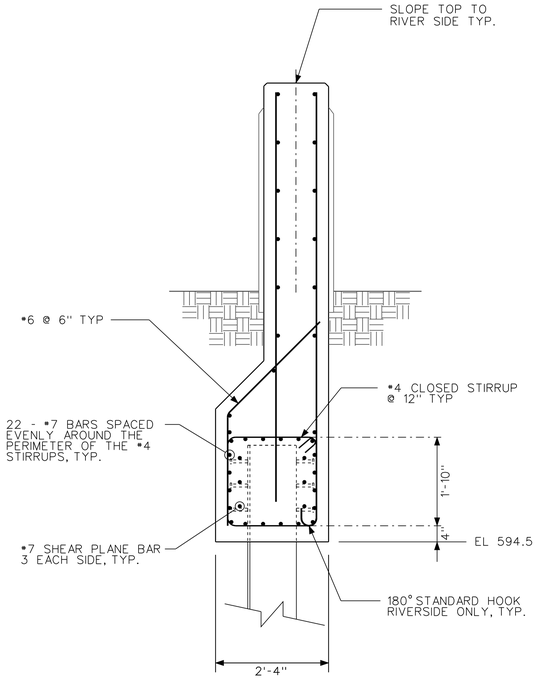

SECTION B (S41 | S41)
SCALE: 3/4" = 1'-0"

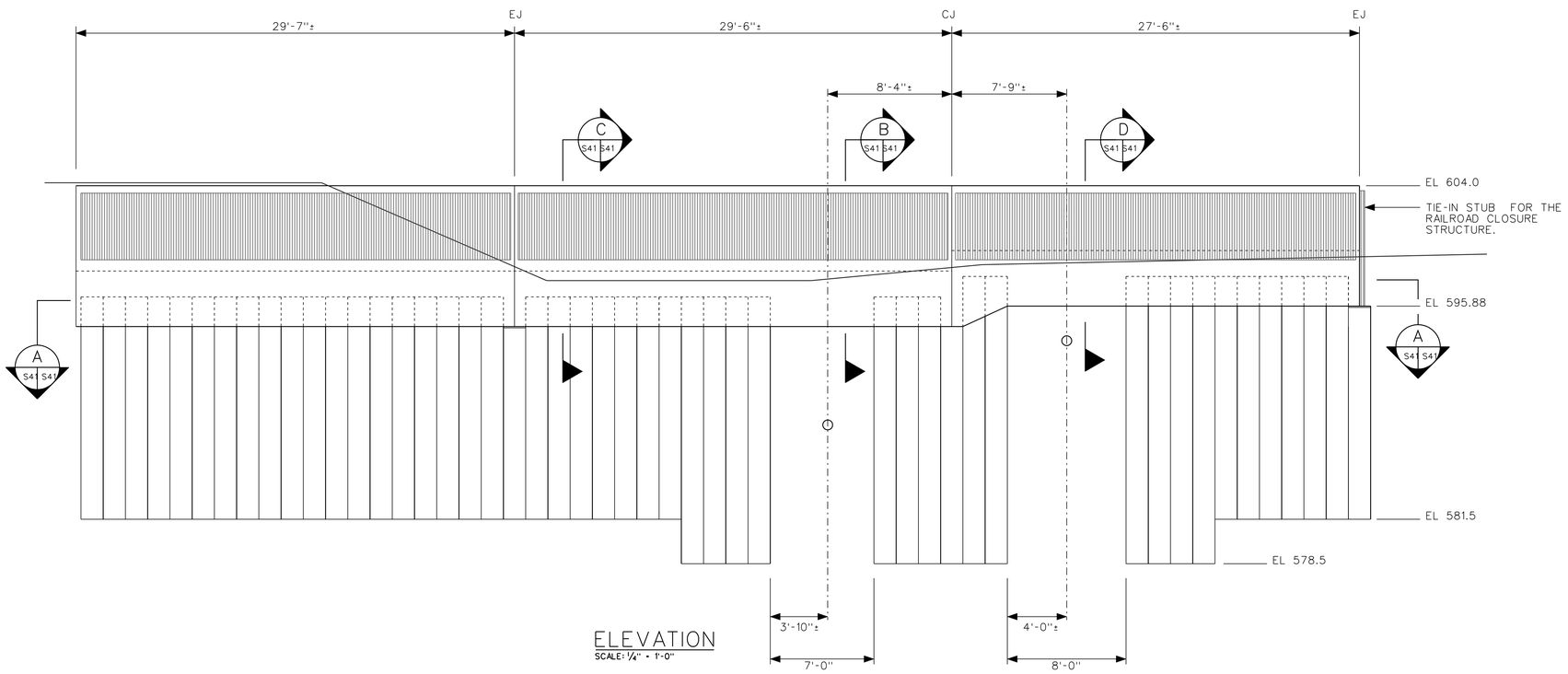

ELEVATION
SCALE: 1/4" = 1'-0"

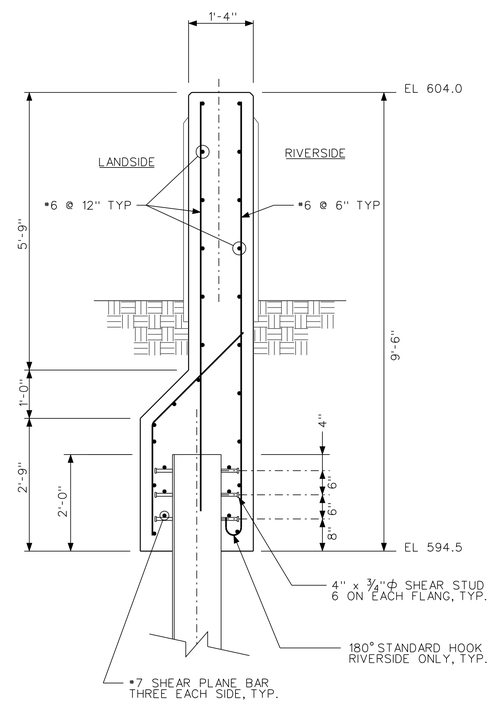

SECTION C (S41 | S41)
SCALE: 3/4" = 1'-0"

US Army Corps of Engineers
Chicago District

SYMBOL	AMENDMENT DESCRIPTION	DATE APPROVED	SYMBOL	DESCRIPTION	DATE APPROVED

DESIGNED BY: EGS
DATE: AUGUST 2007
DRAWN BY: EGS
SCALE: AS SHOWN
CHECKED BY: JJS
SOLICITATION NUMBER: W912P6-07-B-0006
SUBMITTED BY: STEVE TREHARNE
DATE:

U.S. ARMY ENGINEER DISTRICT
CORPS OF ENGINEERS
CHICAGO, ILLINOIS

LITTLE CALUMET RIVER, INDIANA
LOCAL FLOOD PROTECTION
STAGE V, PHASE 2
UTILITY CORRIDOR
NORTHWEST SIDE
PLAN, ELEVATION AND SECTION

SHEET REFERENCE NUMBER:
S-41
SHEET 117 OF 138

PLOT DATE: $DATE$
FILENAME: $FILENAME$

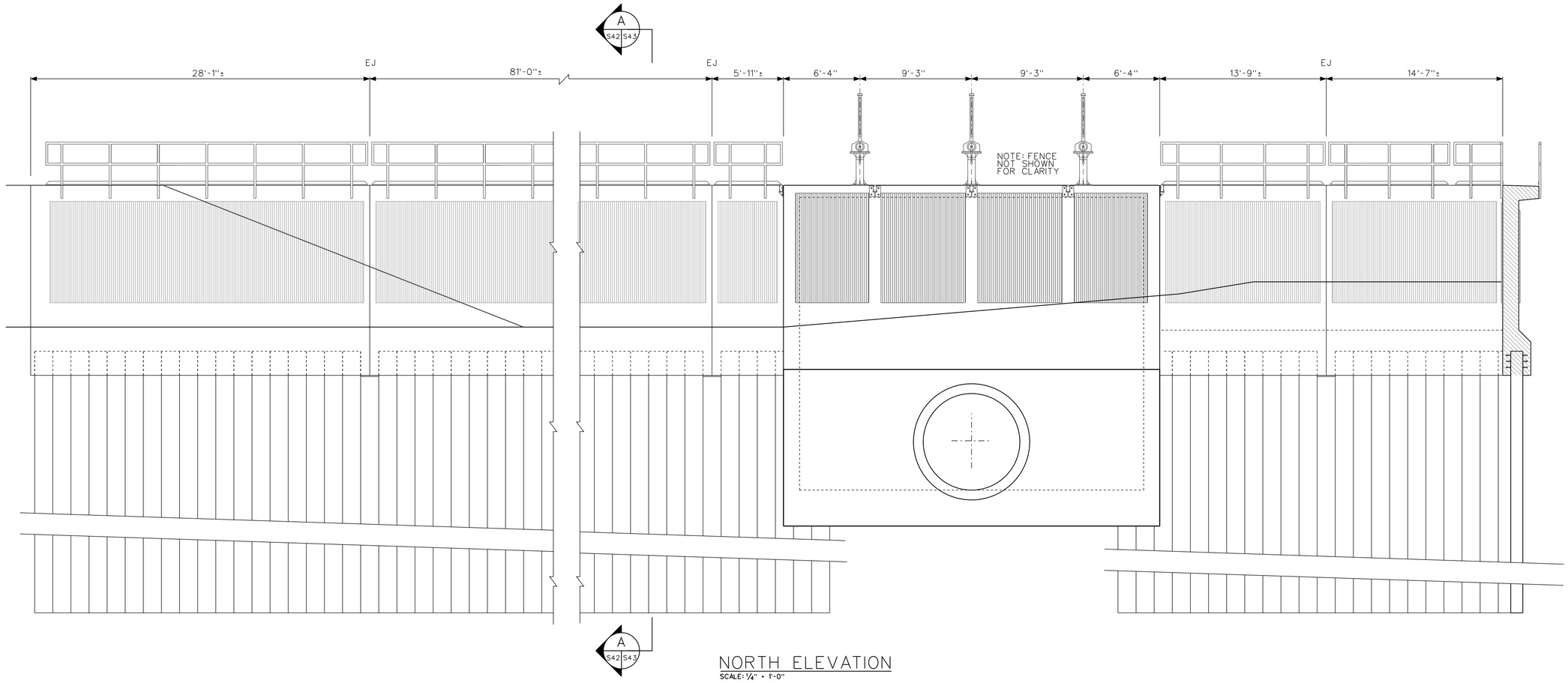

NORTH ELEVATION
SCALE: 1/4" = 1'-0"

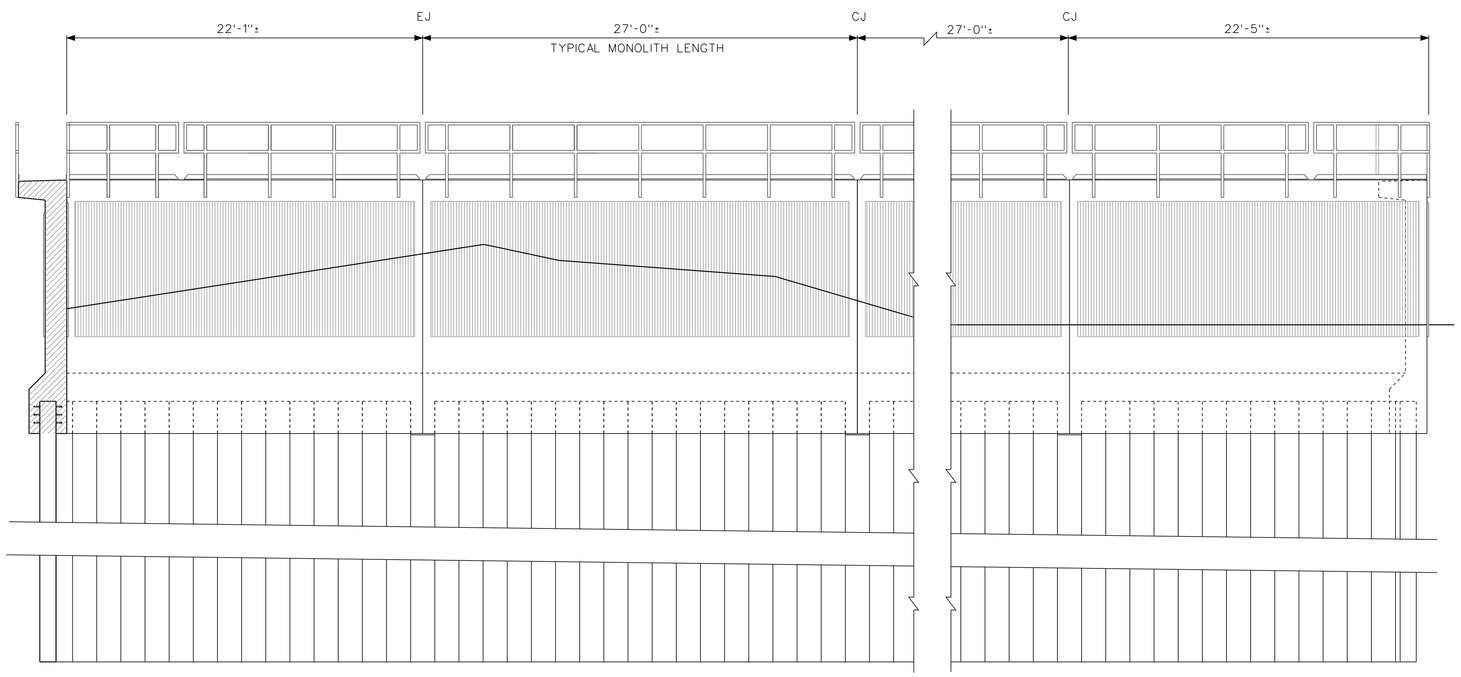

EAST ELEVATION
SCALE: 1/4" = 1'-0"

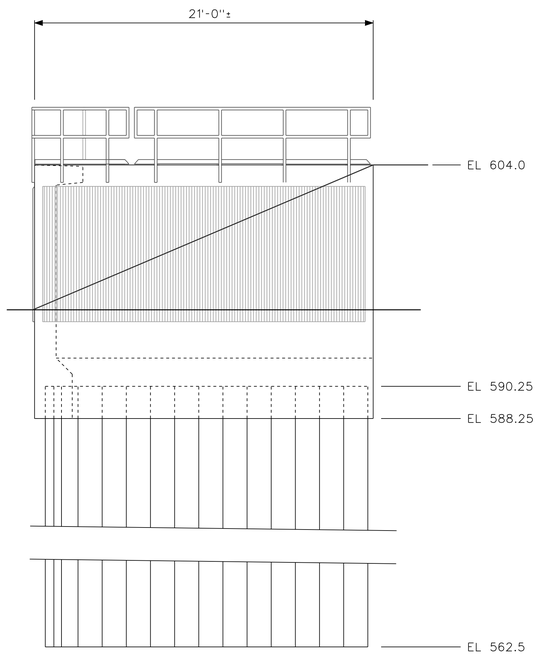

RETURN WALL ELEVATION
SCALE: 1/4" = 1'-0"

US Army Corps of Engineers
Chicago District

SYMBOL	AMENDMENT DESCRIPTION	DATE APPROVED	SYMBOL	DESCRIPTION	DATE APPROVED

DESIGNED BY: EGS
DATE: AUGUST 2007
DRAWN BY: EGS
SCALE: AS SHOWN
CHECKED BY: JJS
SOLICITATION NUMBER: W912P6-07-B-0006
SUBMITTED BY: STEVE TREHARNE
DATE:

U.S. ARMY ENGINEER DISTRICT
CORPS OF ENGINEERS
CHICAGO, ILLINOIS

LITTLE CALUMET RIVER, INDIANA
LOCAL FLOOD PROTECTION
STAGE V, PHASE 2

INDIANAPOLIS PUMP STATION 96"
GATEWELL I-WALL ELEVATION

SHEET REFERENCE NUMBER:
S-42

PLOT DATE: $DATE$
FILENAME: $FILENAME$

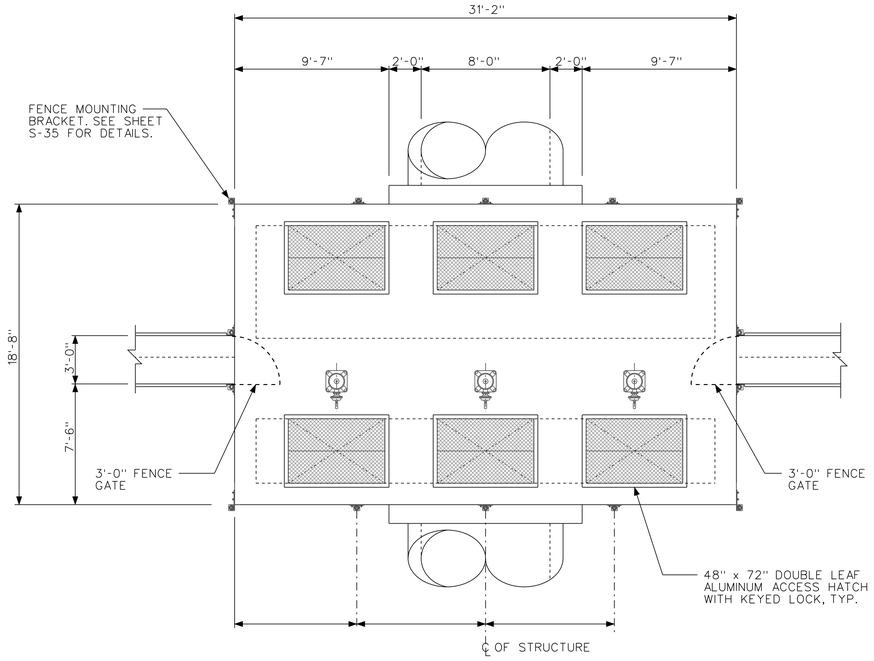

PLAN
SCALE: 1/4" = 1'-0"

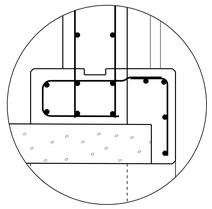

DETAIL 1 (S43 S44)
SCALE: 3/4" = 1'-0"

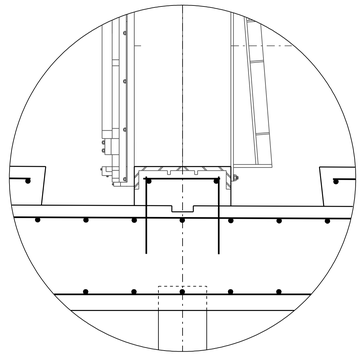

DETAIL 2 (S43 S44)
SCALE: 3/4" = 1'-0"

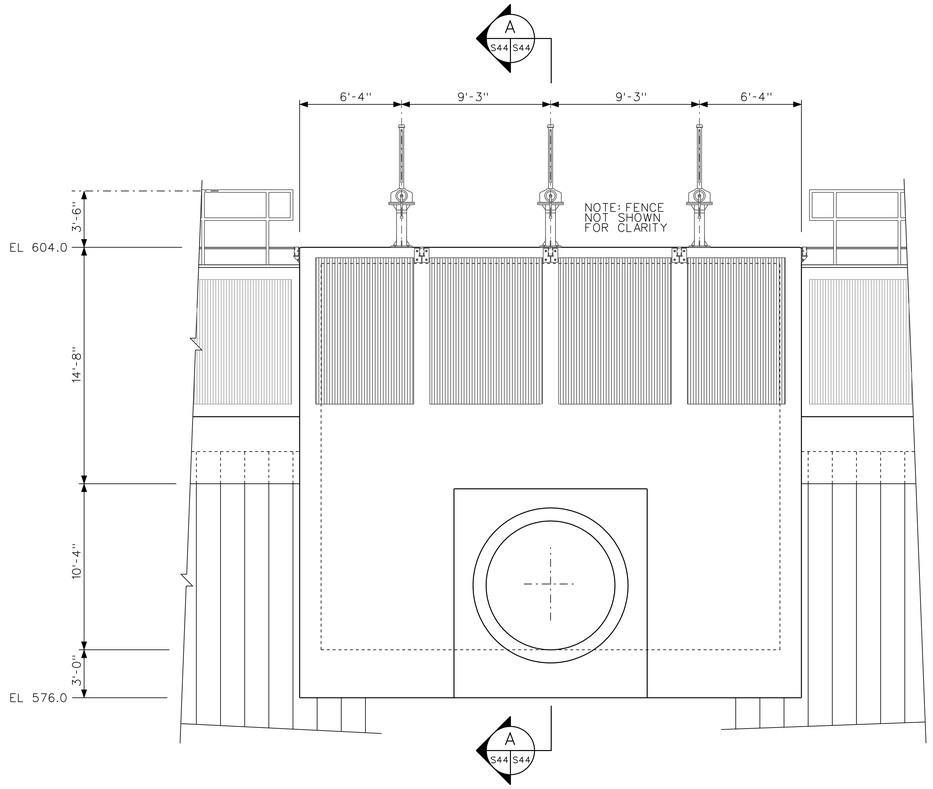

ELEVATION
SCALE: 1/4" = 1'-0"

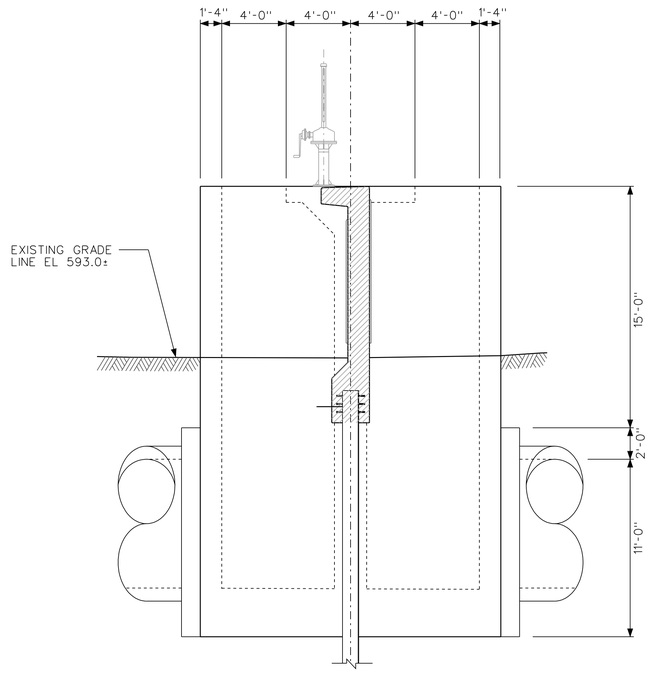

SIDE ELEVATION
SCALE: 1/4" = 1'-0"

US Army Corps of Engineers
Chicago District

SYMBOL	AMENDMENT DESCRIPTION	DATE APPROVED	SYMBOL	DESCRIPTION	DATE APPROVED

DESIGNED BY: EGS
DATE: AUGUST 2007
DRAWN BY: EGS
SCALE: AS SHOWN
CHECKED BY: JJS
SOLICITATION NUMBER: W912P6-07-B-0006
SUBMITTED BY: STEVE TREHARNE
DATE:

U.S. ARMY ENGINEER DISTRICT
CORPS OF ENGINEERS
CHICAGO, ILLINOIS

LITTLE CALUMET RIVER, INDIANA
LOCAL FLOOD PROTECTION
STAGE V, PHASE 2
INDIANAPOLIS PUMP STATION 96"
GATEWELL PLAN, ELEVATION, AND SECTION

SHEET REFERENCE NUMBER:
S-43
SHEET 119 OF 138

PLOT DATE: $DATE$
FILENAME: $FILENAME$

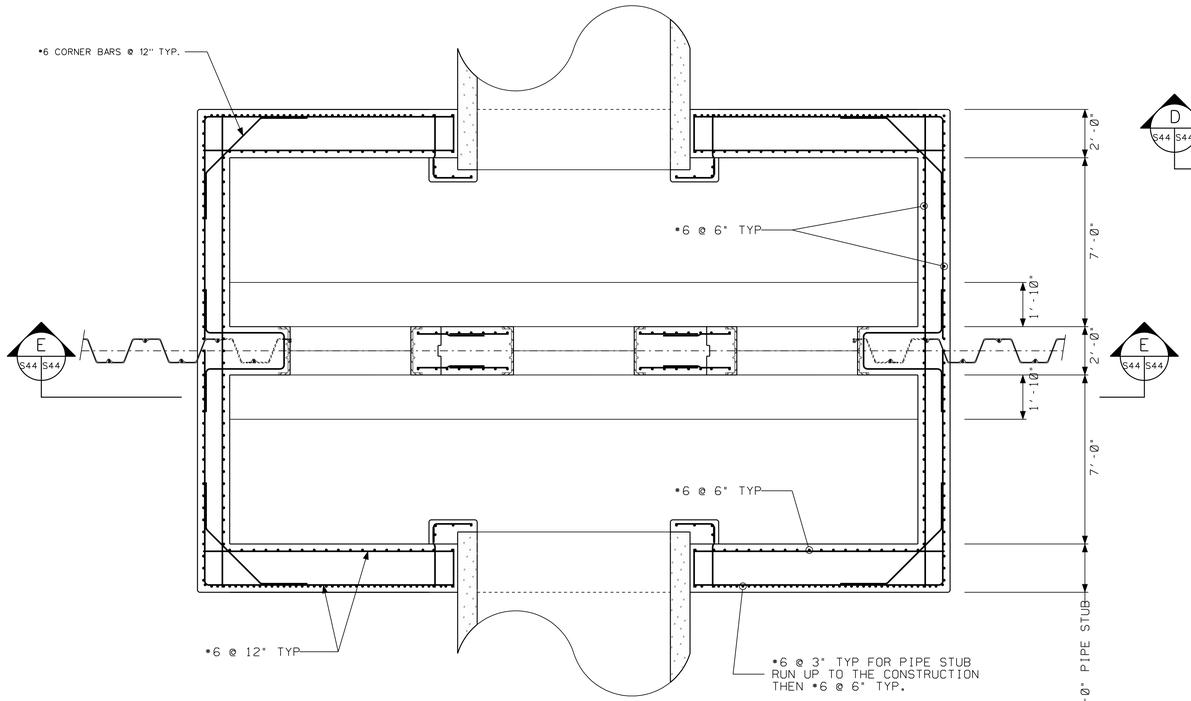

SECTION B
SCALE: 3/8" = 1'-0" S44 S33b

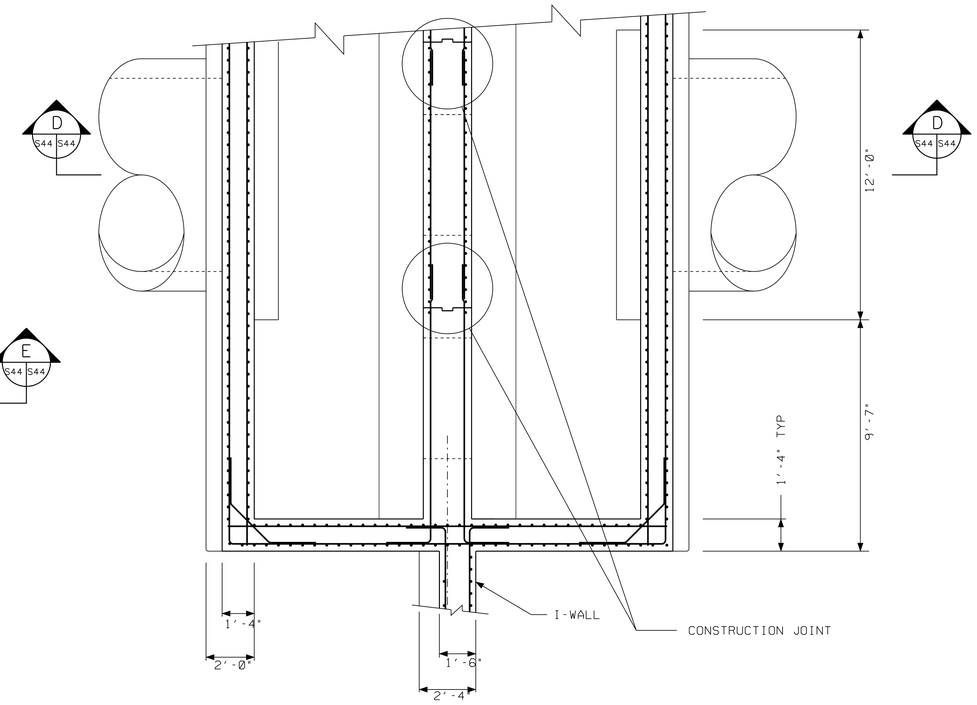

SECTION C
SCALE: 3/8" = 1'-0" S44 S44

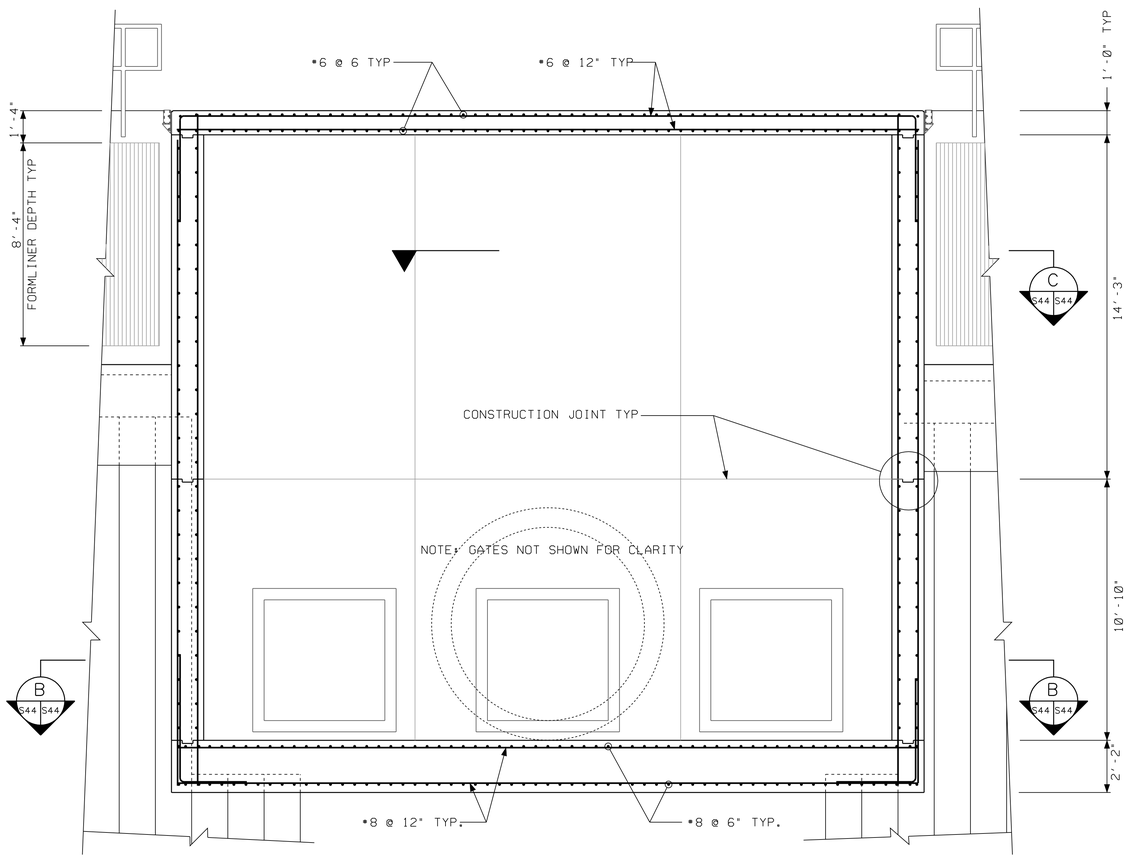

SECTION E
SCALE: 3/8" = 1'-0" S44 S44

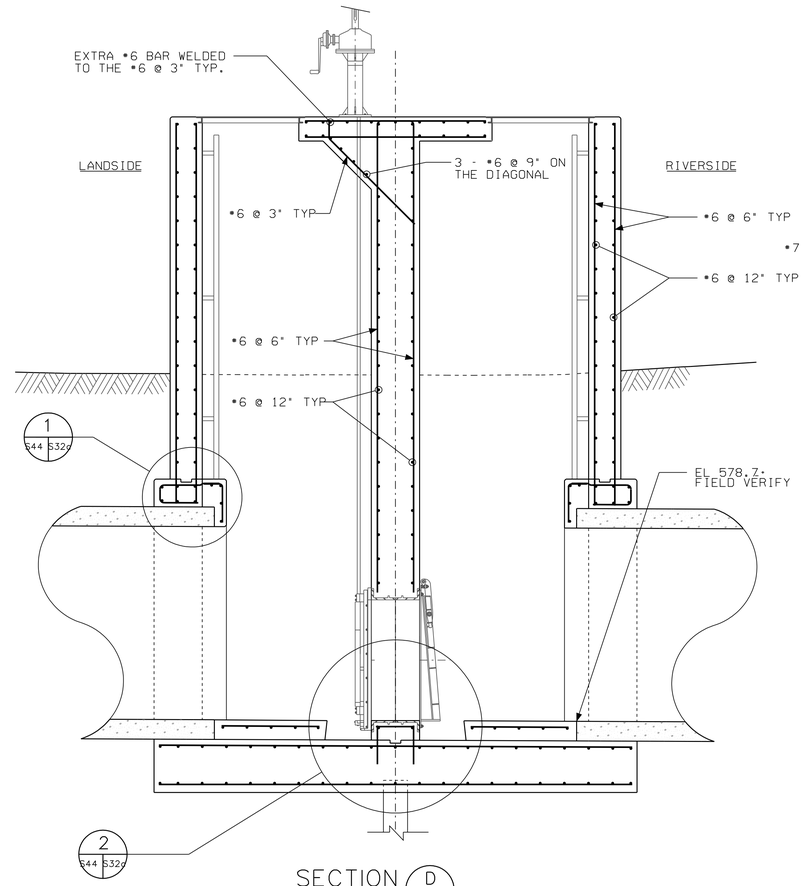

SECTION D
SCALE: 3/8" = 1'-0" S44 S44

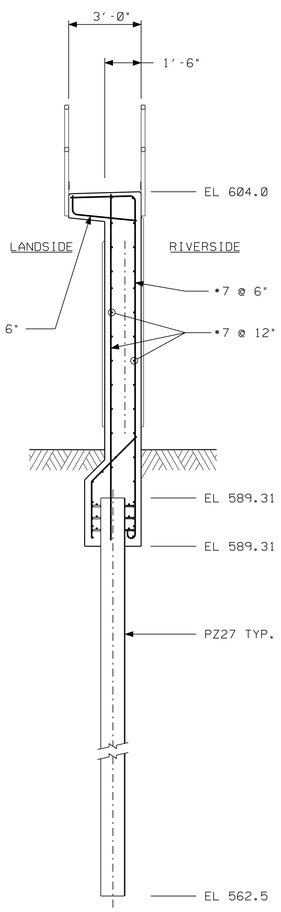

SECTION A
SCALE: 3/8" = 1'-0" S32 S44

US Army Corps of Engineers
Chicago District

SYMBOL	AMENDMENT DESCRIPTION	DATE APPROVED	SYMBOL	DESCRIPTION	DATE APPROVED

DESIGNED BY: EGS
DATE: AUGUST 2007
DRAWN BY: EGS
SCALE: AS SHOWN
CHECKED BY: JJS
SOLICITATION NUMBER: W912P6-07-B-0006
SUBMITTED BY: STEVE TREHARNE
DATE:

U.S. ARMY ENGINEER DISTRICT
CORPS OF ENGINEERS
CHICAGO, ILLINOIS

LITTLE CALUMET RIVER, INDIANA
LOCAL FLOOD PROTECTION
STAGE V, PHASE 2
INDIANAPOLIS PUMP STATION
96" GATEWELL
SECTIONS AND DETAILS

SHEET REFERENCE NUMBER:
S-44
SHEET 120 OF 138

PLOT DATE: 8/7/2007
FILENAME: D:\working\dms24959\LRC52-S44.dgn

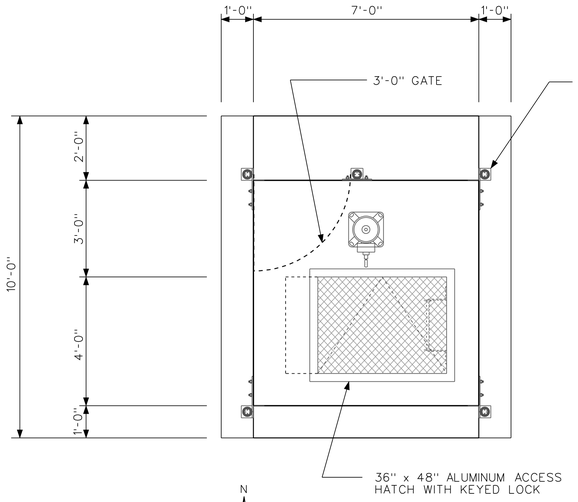

PLAN
SCALE: 1/2" = 1'-0"

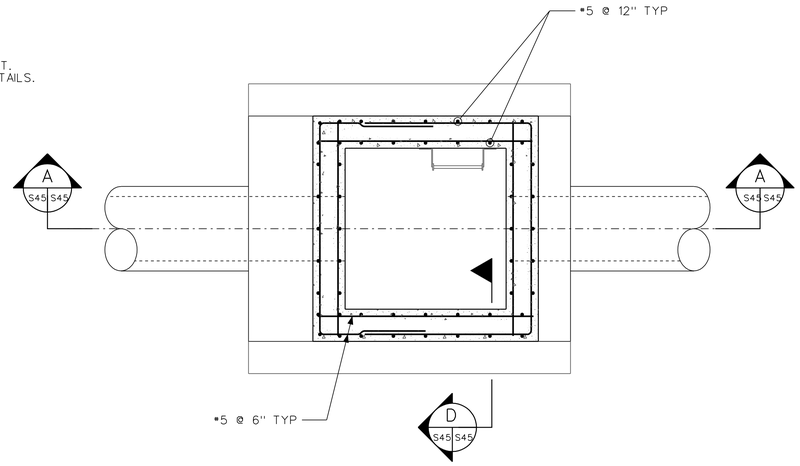

SECTION B
SCALE: 1/2" = 1'-0"
S45 S45

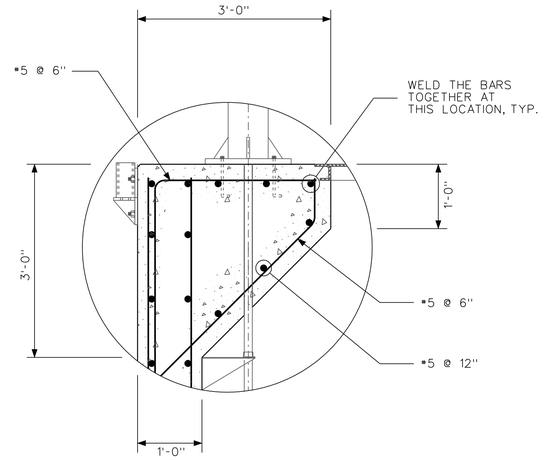

DETAIL 1
SCALE: 1" = 1'-0"
S45 S45

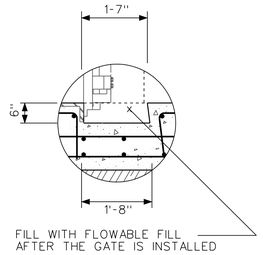

DETAIL 4
SCALE: 1/2" = 1'-0"
S45 S45

NOTES:

1. ALL REINFORCING CLEAR COVER SHALL BE 2" TYP ON MEMBERS 12" THICK OR LESS AND SHALL BE 3" TYP ON MEMBERS GREATER THAN 12" THICK UNLESS OTHERWISE NOTED.

2. HOT DIP GALVANIZE ALL METAL FABRICATIONS AFTER FABRICATION UNLESS OTHERWISE NOTED. FIELD VERIFY ALL DIMENSIONS PRIOR TO FABRICATION.

3. SEE SHEET C-46 FOR GATEWELL PROFILE.

4. SEE SHEET S-34 FOR STANDARD CONCRETE DETAILS.

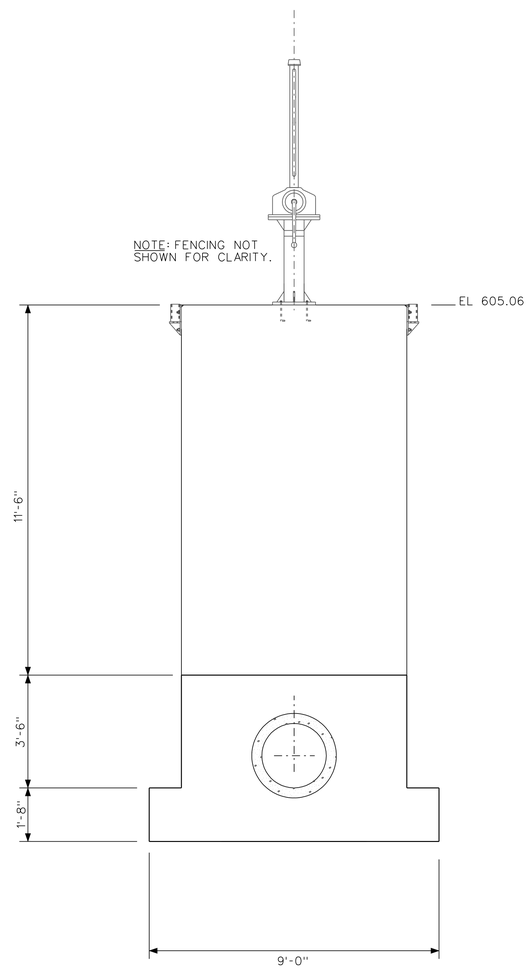

ELEVATION
SCALE: 1/2" = 1'-0"

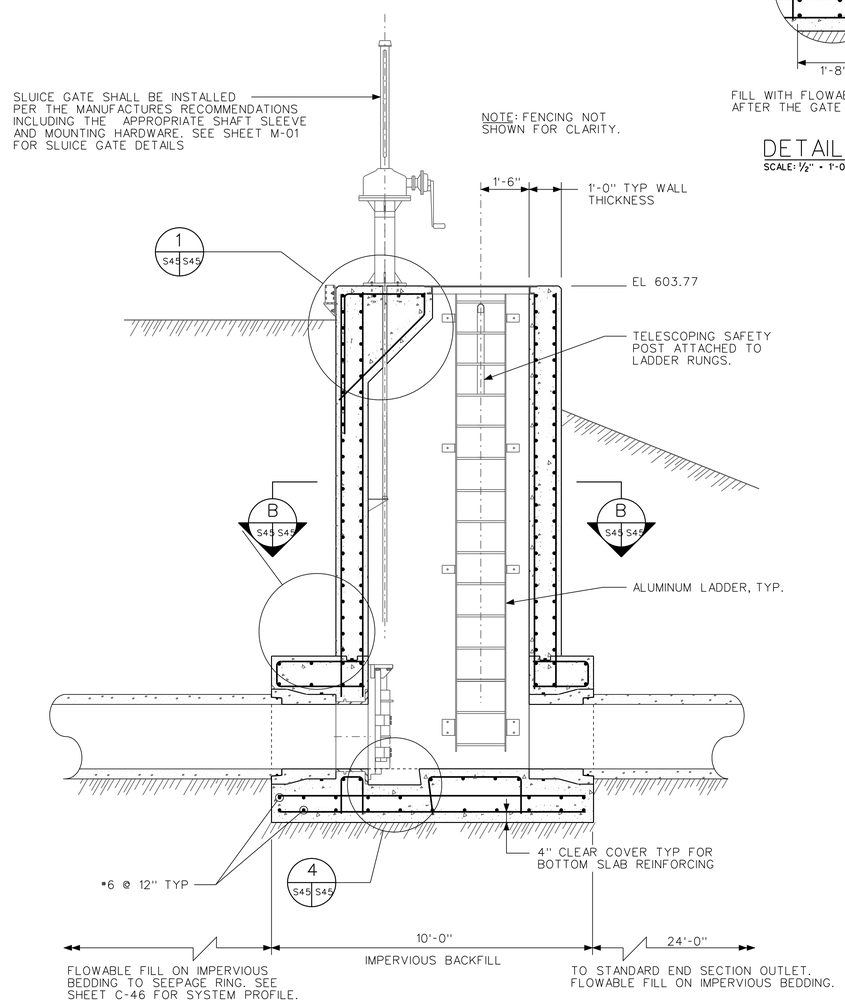

SECTION A
SCALE: 1/2" = 1'-0"
S45 S45

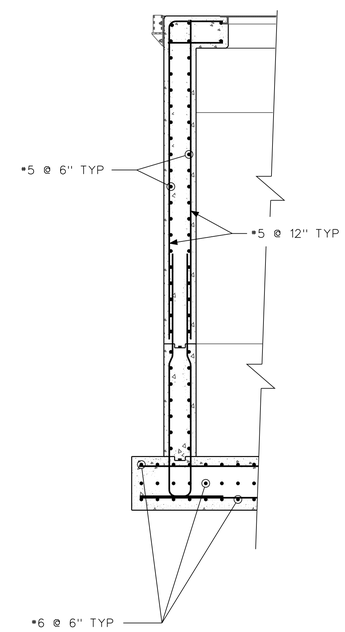

SECTION D
SCALE: 1/2" = 1'-0"
S45 S45

12 0 1 2 3 4 5
SCALE: 1/2" = 1'-0"

US Army Corps of Engineers
Chicago District

SYMBOL	AMENDMENT DESCRIPTION	DATE APPROVED	SYMBOL	DESCRIPTION	DATE APPROVED

DESIGNED BY: EGS
DRAWN BY: EGS
CHECKED BY: JJS
SUBMITTED BY: STEVE TREHARNE
DATE: AUGUST 2007
SCALE: AS SHOWN
SOLICITATION NUMBER: W912P6-07-B-0006
DATE:

U.S. ARMY ENGINEER DISTRICT
CORPS OF ENGINEERS
CHICAGO, ILLINOIS

LITTLE CALUMET RIVER, INDIANA
LOCAL FLOOD PROTECTION
STAGE V, PHASE 2

24" GATEWELL, 6-5C PLAN, ELEVATION AND SECTIONS

SHEET REFERENCE NUMBER:
S-45

PLOT DATE: $DATE$
FILENAME: $FILENAME$

LAP SPLICE LENGTH (in)

TABLE 2	f'c=4000 psi		fy=60,000 psi	
BAR SIZE	TENSION BARS		COMPRESSION BARS	
	TOP BARS	OTHER BARS	NOT ENCLOSED	ENCLOSED WITH SPIRALS OR TIES
#3	14	14	12	12
#4	24	18	15	12
#5	30	23	19	14
#6	36	28	23	17
#7	42	32	26	20
#8	51	39	30	23
#9	64	49	34	25
#10	81	63	38	29
#11	100	77	42	32

BAR DEVELOPMENT LENGTH (in)

TABLE 1	f'c=4000 psi		fy=60,000 psi	
BAR SIZE	TENSION BARS		COMPRESSION BARS	
	TOP BARS	OTHER BARS	NOT ENCLOSED	ENCLOSED WITH SPIRALS OR TIES
#3	14	12	8	8
#4	18	14	10	8
#5	23	18	12	9
#6	28	21	14	11
#7	32	25	17	12
#8	39	30	19	14
#9	49	38	21	15
#10	63	48	24	18
#11	77	59	27	20

GENERAL CONCRETE NOTES:

1. TOP BARS ARE HORIZONTAL BARS IN THE TOP FACE LAYER(S) OF BEAMS AND SLABS, SO PLACED THAT MORE THAN 12 INCHES OF FRESH CONCRETE IS CAST BELOW THE DEVELOPMENT LENGTH OR SPLICE. ALL OTHER HORIZONTAL AND VERTICAL BARS IN BEAMS, SLABS, COLUMNS AND WALLS SHALL BE CLASSIFIED AS OTHER BARS, UNLESS OTHERWISE NOTED ON THE DRAWINGS.
2. LAP SPLICES SHALL NOT BE USED IN LOCATION OF MAXIMUM MOMENTS UNLESS OTHERWISE PERMITTED ON THE DRAWINGS.
3. REINFORCEMENT SHALL HAVE A MINIMUM CONCRETE COVER OF 3", EXCEPT AS OTHERWISE NOTED OR SHOWN ON THE DRAWINGS.
4. ALL EXPOSED CONCRETE EDGES SHALL HAVE A 3/4" CHAMFER.
5. ABBREVIATIONS: d_b - BAR DIAMETER; ldh - DEVELOPMENT LENGTH WITH HOOK

VALUES OF ldh (in)

TABLE 3	fy=60,000 psi
BAR SIZE	f'c=4000 psi
#3	6
#4	7
#5	8
#6	10
#7	12
#8	13
#9	15
#10	17
#11	19
#14	32
#18	43

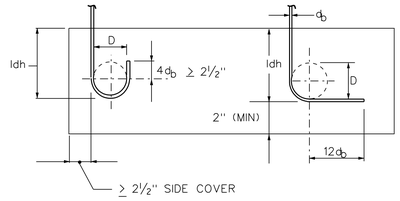

STANDARD END HOOK
TENSION DEVELOPMENT LENGTH
NTS

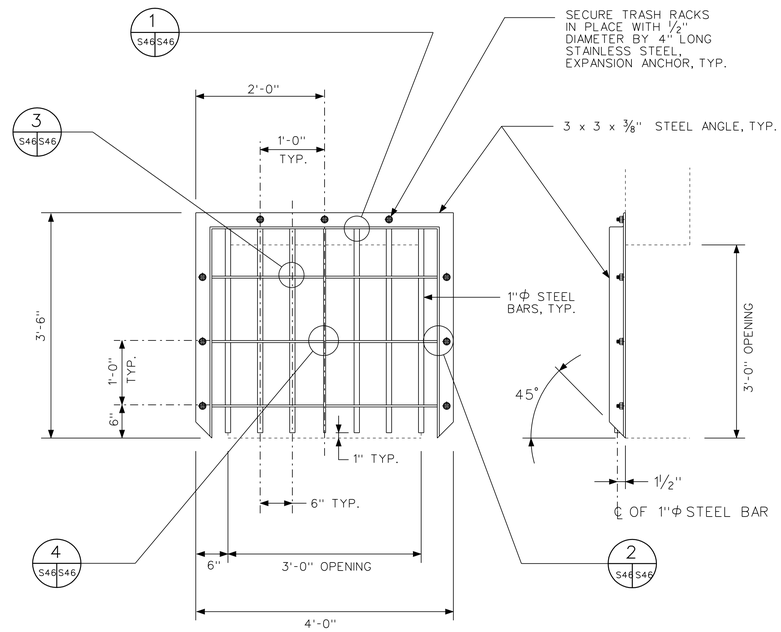

GATEWELL TRASH RACK DETAILS
NTS

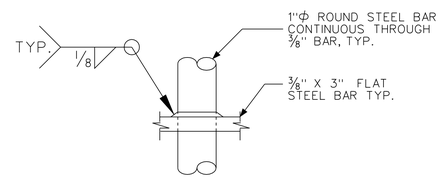

INTERIOR BAR DETAIL 3 S46 S46
NTS

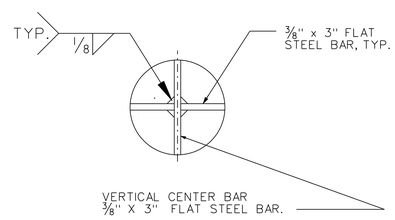

CENTER BAR DETAIL 4 S46 S46
NTS

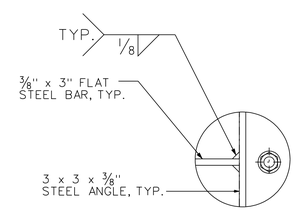

SIDE BAR DETAIL 2 S46 S46
NTS

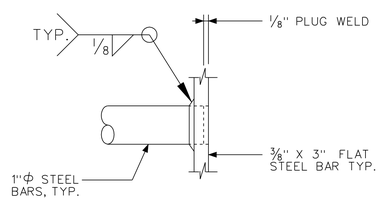

EXTERIOR BAR DETAIL 1 S46 S46
NTS

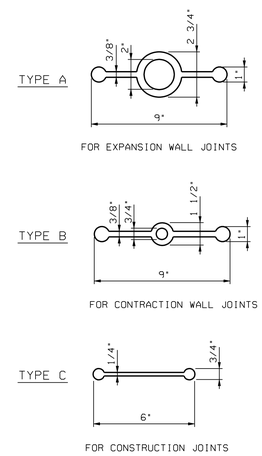

WATERSTOP DETAILS
NTS

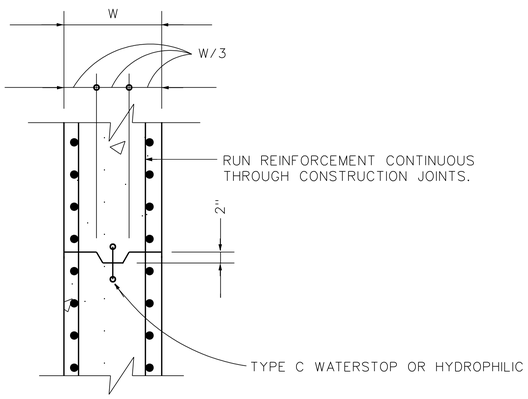

TYPICAL KEYED CONSTRUCTION JOINT
NTS

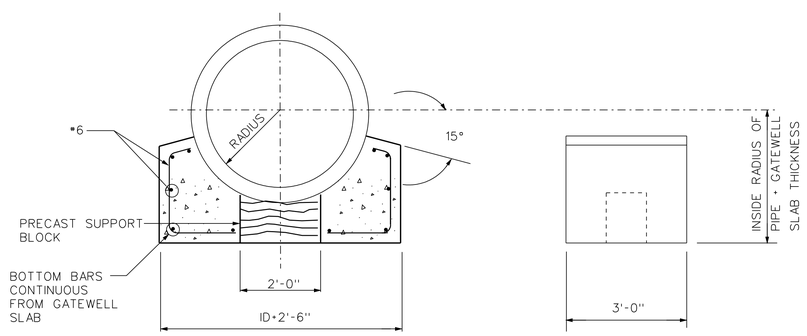

PIPE CRADLE DETAILS
NTS

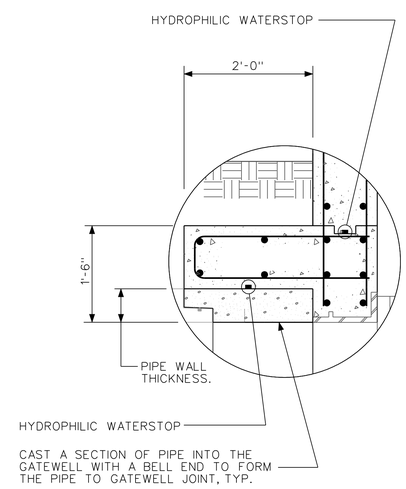

DETAIL 3 S2 S46 2 S6 S46
NTS

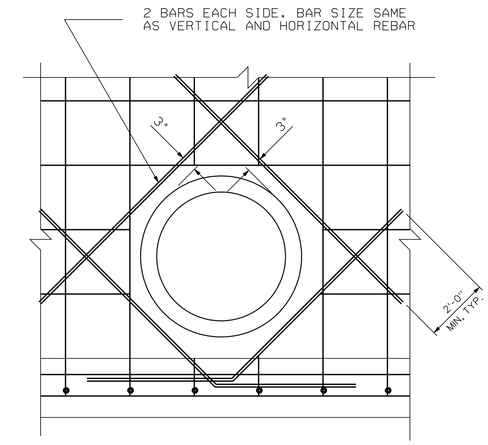

TYP. REINFORCING AT OPENINGS
NTS

US Army Corps of Engineers
Chicago District

SYMBOL	AMENDMENT DESCRIPTION	DATE APPROVED	SYMBOL	DESCRIPTION	DATE APPROVED

DESIGNED BY: EGS | DATE: AUGUST 2007
DRAWN BY: EGS | SCALE: AS SHOWN
CHECKED BY: JJS | SOLICITATION NUMBER:
SUBMITTED BY: JIM PRZEWOZNIK | DATE:

U.S. ARMY ENGINEER DISTRICT
CORPS OF ENGINEERS
CHICAGO, ILLINOIS

LITTLE CALUMET RIVER, INDIANA
LOCAL FLOOD PROTECTION
STAGE V, PHASE 2

STANDARD CONCRETE AND CONSTRUCTION DETAILS

SHEET REFERENCE NUMBER:
S-46
SHEET 122 OF 138

PLOT DATE: $DATE$
FILENAME: $FILENAME$

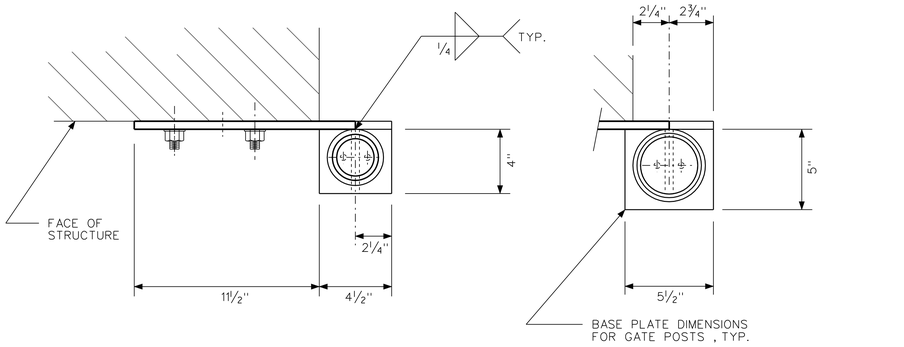

NOTES:

1. THE TOP OF THE FENCE SHALL BE 8'-0" ABOVE THE TOP OF THE STRUCTURE.
2. ALL FENCE POST AND GATE FENCE POSTS, SHALL BE STANDARD WEIGHT STEEL PIPE CONFORMING TO ASTM A53 GRADE B.
3. ALL PIPE SLEEVES FOR THE FENCE POSTS AND GATE POSTS SHALL BE STANDARD WEIGHT STEEL PIPE CONFORMING TO ASTM A53 GRADE B.
4. ALL MISCELLANEOUS METAL PARTS, EXCEPT FOR THE EXPANSION ANCHORS SHALL BE HOT -DIPPED GALVANIZED AFTER FABRICATION.
5. ALL STEEL PLATE USED TO FABRICATE THE FENCE BRACKETS SHALL BE 1/2" THICK ASTM A36.
6. ALL GATE COMPONENTS SHALL CONFORM TO SPECIFICATION SECTION 02820 EXCEPT AS MODIFIED ON THESE DRAWINGS.
7. WELD POSTS TO FENCE BRACKETS PRIOR TO GALVANIZING.

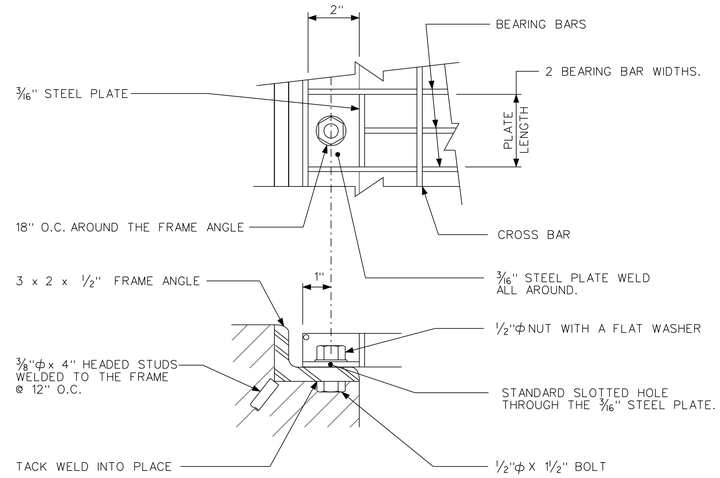

STEEL GRATING DETAILS

N.T.S.

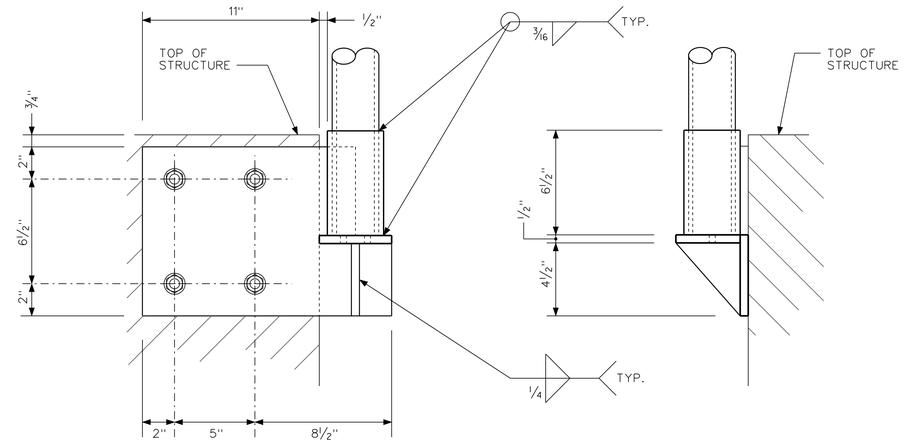

OUTSIDE CORNER BRACKET

NTS

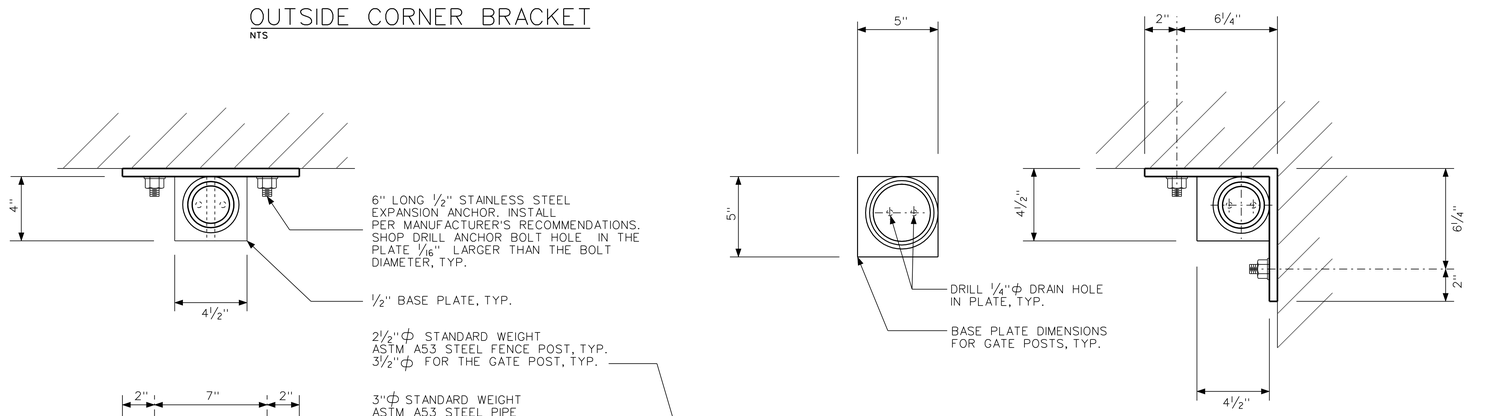

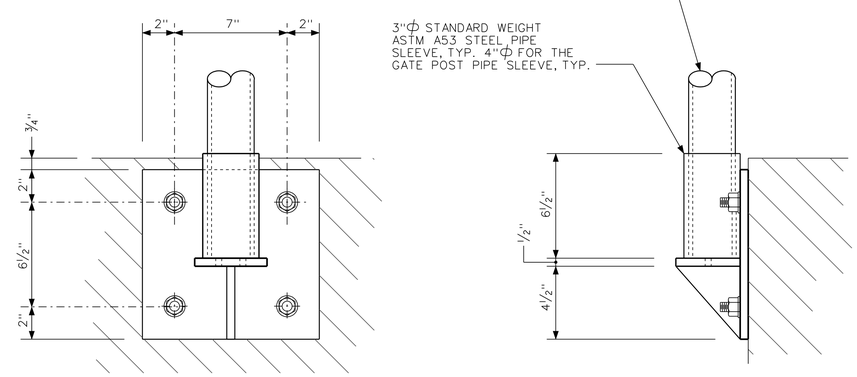

FACE BRACKET

NTS

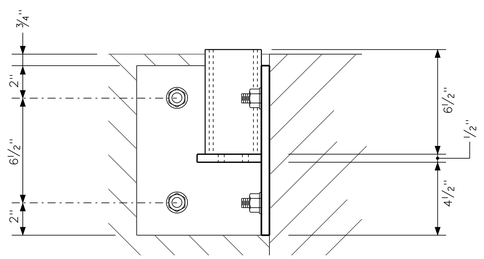

INSIDE CORNER BRACKET

NTS

US Army Corps of Engineers
Chicago District

SYMBOL	AMENDMENT DESCRIPTION	DATE APPROVED	SYMBOL	DESCRIPTION	DATE APPROVED

DESIGNED BY: EGS
DRAWN BY: EGS
CHECKED BY: JJS
SUBMITTED BY: STEVE TREHARNE
DATE: AUGUST 2007
SCALE: AS SHOWN
SOLICITATION NUMBER: W912P6-07-B-0006
DATE:

U.S. ARMY ENGINEER DISTRICT
CORPS OF ENGINEERS
CHICAGO, ILLINOIS

LITTLE CALUMET RIVER, INDIANA
LOCAL FLOOD PROTECTION
STAGE V, PHASE 2

STANDARD MISC. METAL DETAILS

SHEET REFERENCE NUMBER:
S-47

SHEET 122A OF 138

PLOT DATE: $DATE$
FILENAME: $FILENAME$

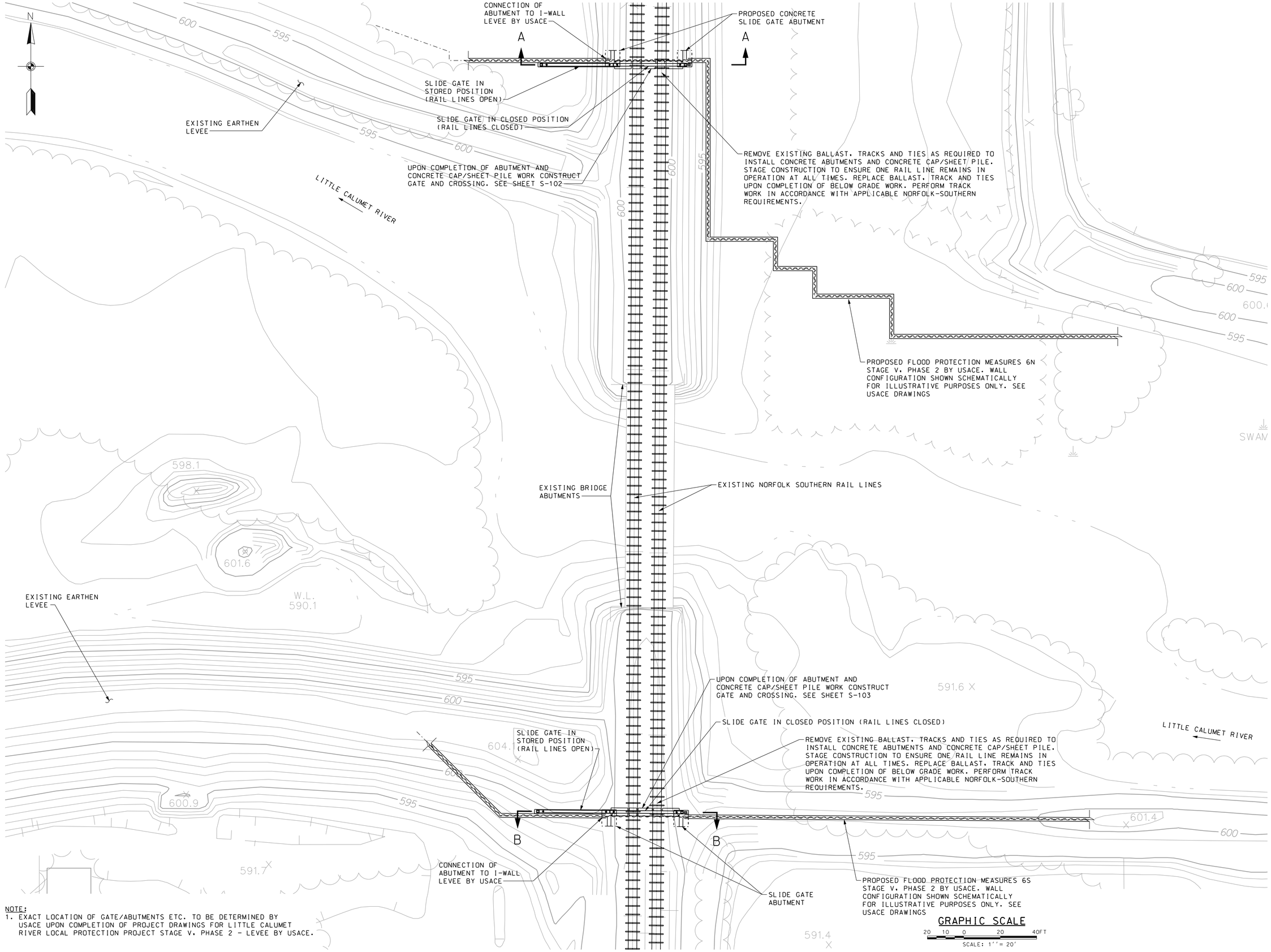

NOTE:
1. EXACT LOCATION OF GATE/ABUTMENTS ETC. TO BE DETERMINED BY USACE UPON COMPLETION OF PROJECT DRAWINGS FOR LITTLE CALUMET RIVER LOCAL PROTECTION PROJECT STAGE V, PHASE 2 - LEVEE BY USACE.

US Army Corps of Engineers
Chicago District

SYMBOL	AMENDMENT DESCRIPTION	DATE APPROVED	SYMBOL	DESCRIPTION	DATE APPROVED

DESIGNED BY: RJB
DATE: JUNE 2007
DRAWN BY: RWH
SCALE: AS SHOWN
CHECKED BY: PJS
SOLICITATION NUMBER: W912P6-07-B-0006
SUBMITTED BY: Robert Burstynowicz
DATE:

U.S. ARMY ENGINEER DISTRICT
CORPS OF ENGINEERS
CHICAGO, ILLINOIS

Bergmann associates

LITTLE CALUMET RIVER, INDIANA
LOCAL FLOOD PROTECTION
STAGE V, PHASE 2
RAILROAD SLIDE GATE CLOSURE
SITE PLAN

SHEET REFERENCE NUMBER:
S-101
SHEET 123 OF 138

PLOT DATE: 8/3/2007
FILENAME: D:\working\dms24897\S101 - Site Plan.dgn

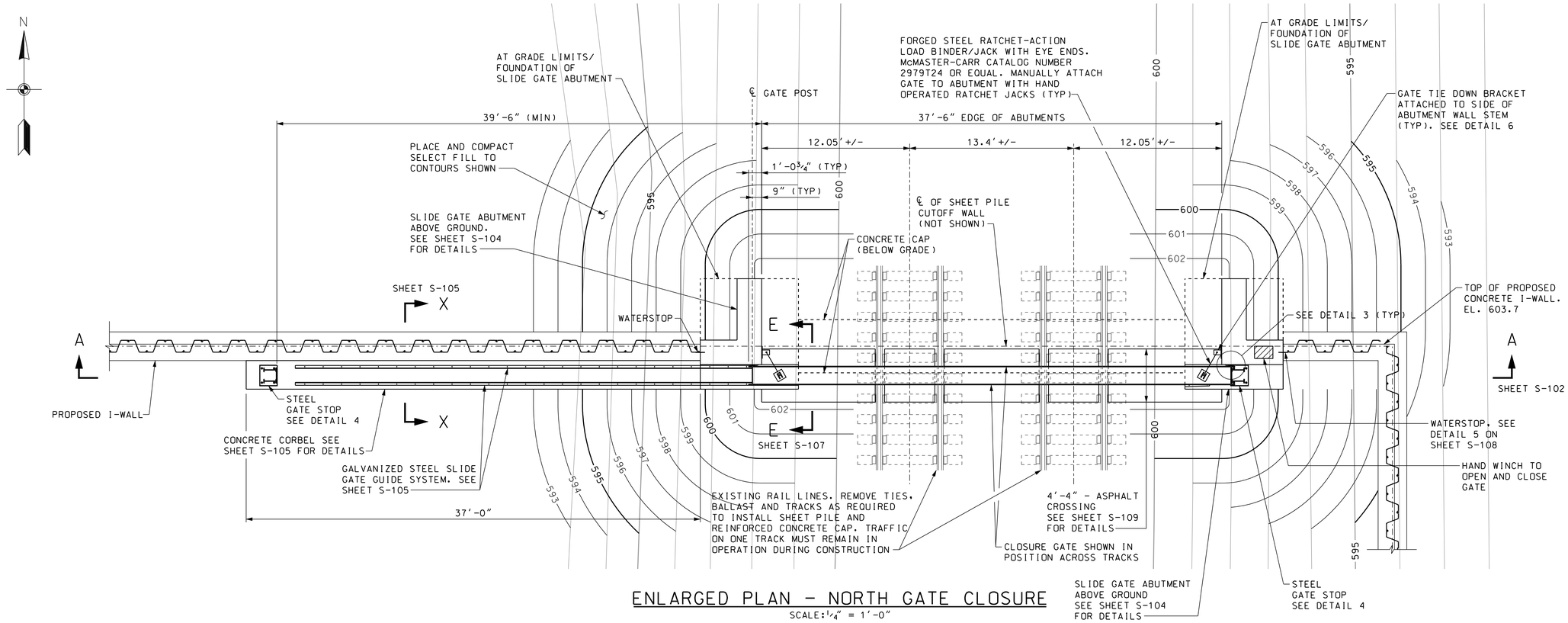

ENLARGED PLAN - NORTH GATE CLOSURE

SCALE: ¼" = 1'-0"

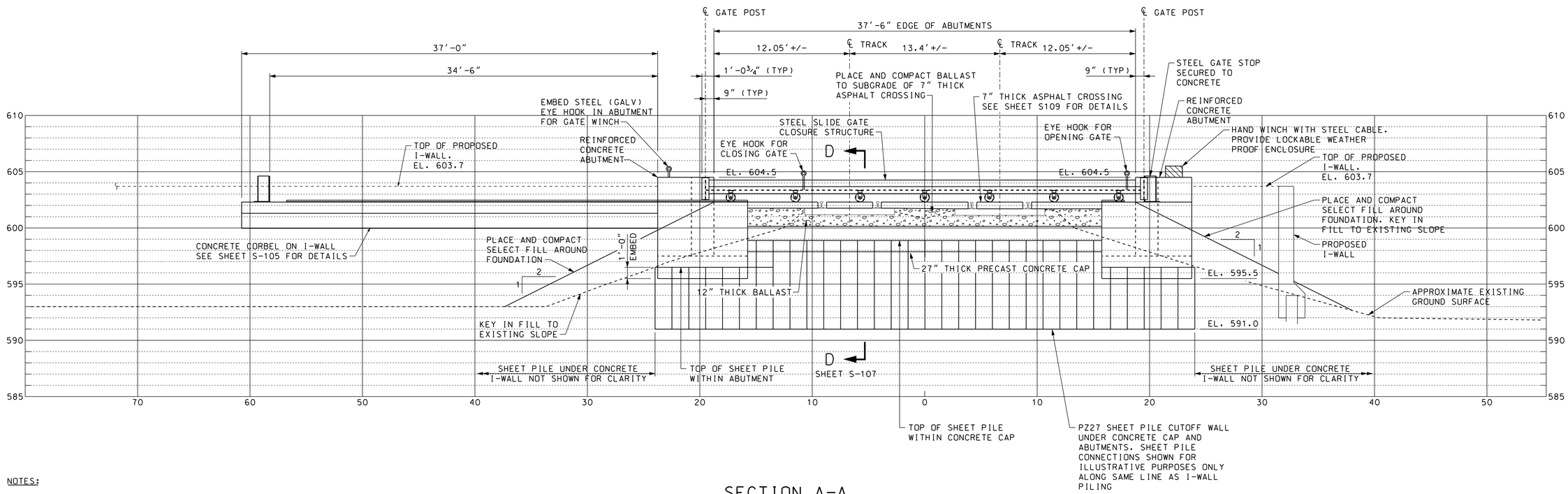

SECTION A-A

SCALE: ¼" = 1'-0"

NOTES:

1. PROVIDE HAND WINCH AND ALL APPURTENANCES AND FEATURES TO OPEN/CLOSE GATE MEETING PERFORMANCE CRITERIA IN SPECIFICATIONS.
2. PROVIDE CHAIN AND LOCK TO SECURE GATE TO CONCRETE ABUTMENT IN THE STORAGE POSITION.
3. SEE ADDITIONAL NOTES ON SHEET G-04.

GRAPHIC SCALE

4 3 2 1 0 4 8

SCALE: ¼" = 1'-0"

US Army Corps of Engineers Chicago District

SYMBOL	AMENDMENT DESCRIPTION	DATE APPROVED	SYMBOL	DESCRIPTION	DATE APPROVED

DESIGNED BY: R.JB
DATE: JUNE 2007
DRAWN BY: RWH
SCALE: AS SHOWN
CHECKED BY: PJS
SOLICITATION NUMBER: W912P6-07-B-0006
SUBMITTED BY: Robert Burstynowicz
DATE:

U.S. ARMY ENGINEER DISTRICT CORPS OF ENGINEERS CHICAGO, ILLINOIS

Bergmann associates

LITTLE CALUMET RIVER, INDIANA LOCAL FLOOD PROTECTION STAGE V, PHASE 2

RAILROAD SLIDE GATE CLOSURE NORTH CLOSURE PLAN & SECTION

SHEET REFERENCE NUMBER: S-102

SHEET 124 OF 138

PLOT DATE: 8/3/2007
FILENAME: D:\working\sm24897\S102 - North Closure Plan and Section.dgn

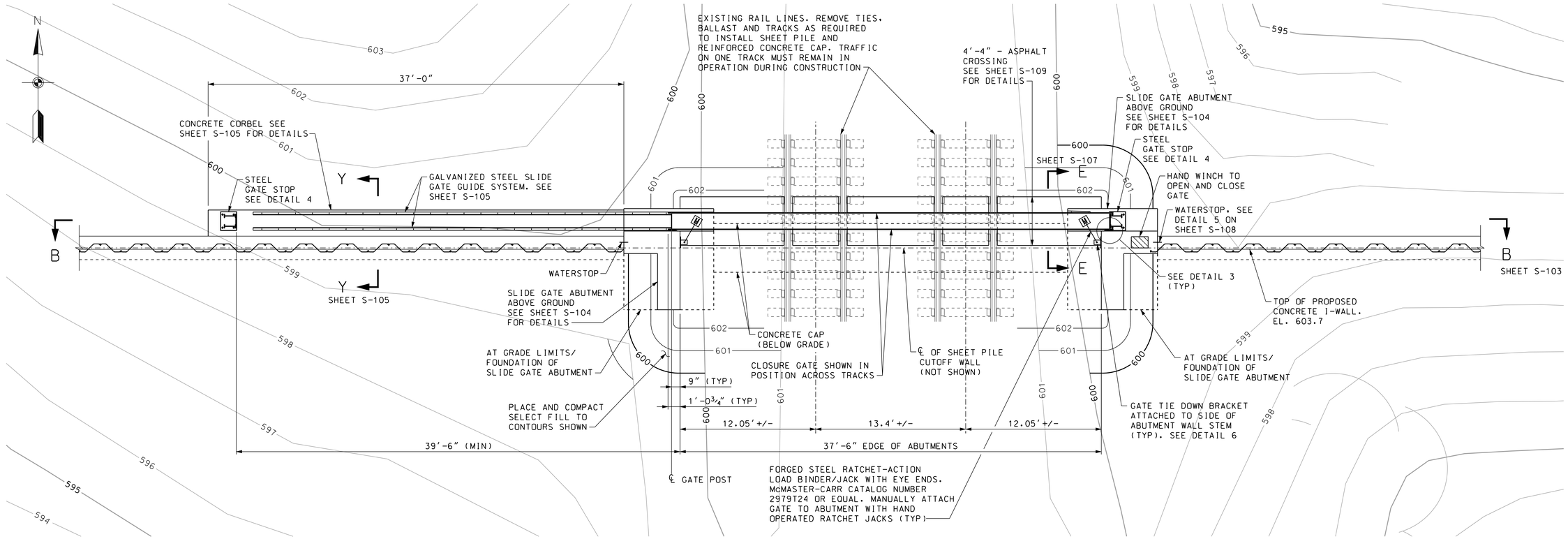

ENLARGED PLAN - SOUTH GATE CLOSURE

SCALE: ¼" = 1'-0"

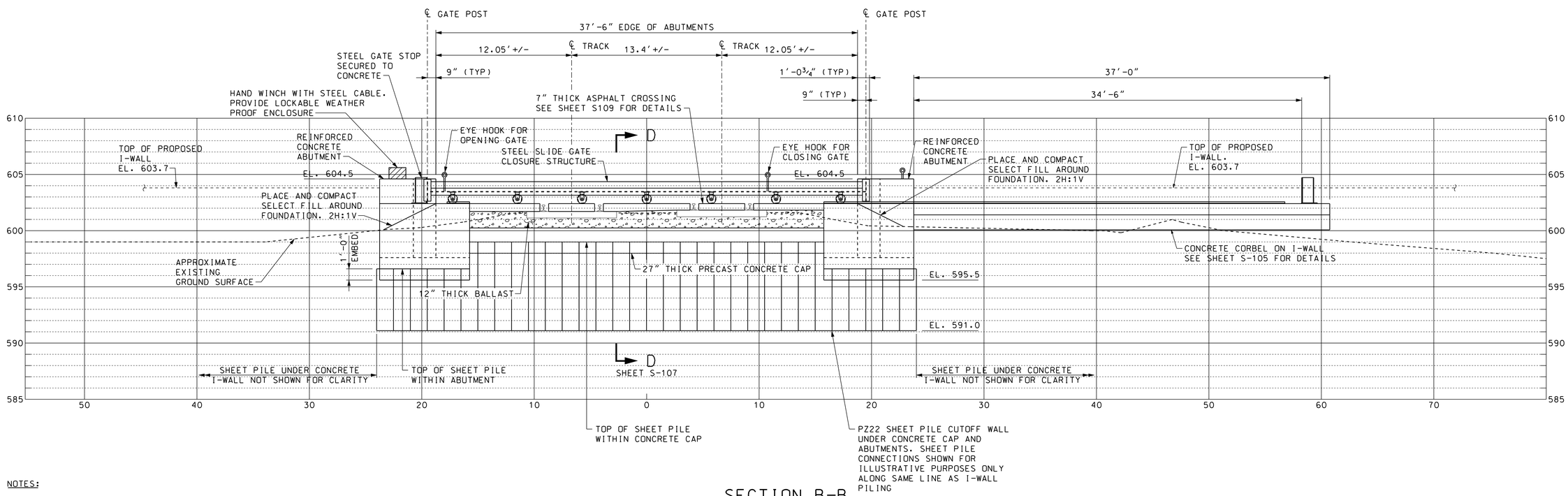

SECTION B-B

SCALE: ¼" = 1'-0"

NOTES:

1. PROVIDE HAND WINCH AND ALL APPURTENANCES AND FEATURES TO OPEN/CLOSE GATE MEETING PERFORMANCE CRITERIA IN SPECIFICATIONS.
2. PROVIDE CHAIN AND LOCK TO SECURE GATE TO CONCRETE ABUTMENT IN THE STORAGE POSITION.
3. SEE ADDITIONAL NOTES ON SHEET G-04.

GRAPHIC SCALE

4 3 2 1 0 4 8

SCALE: ¼"=1'-0"

US Army Corps of Engineers Chicago District

SYMBOL	AMENDMENT DESCRIPTION	DATE APPROVED	SYMBOL	DESCRIPTION	DATE APPROVED

DESIGNED BY: R.J.B. DATE: JUNE 2007
DRAWN BY: RWH SCALE: AS SHOWN
CHECKED BY: PJS SOLICITATION NUMBER: W912P6-07-B-0006
SUBMITTED BY: Robert Burslynowicz DATE:

U.S. ARMY ENGINEER DISTRICT CORPS OF ENGINEERS CHICAGO, ILLINOIS

Bergmann associates

LITTLE CALUMET RIVER, INDIANA LOCAL FLOOD PROTECTION STAGE V, PHASE 2

RAILROAD SLIDE GATE CLOSURE SOUTH CLOSURE PLAN & SECTION

SHEET REFERENCE NUMBER: S-103

SHEET 125 OF 138

PLOT DATE: 8/3/2007
FILENAME: D:\working\sm24897\S103 - South Closure Plan and Section.dgn

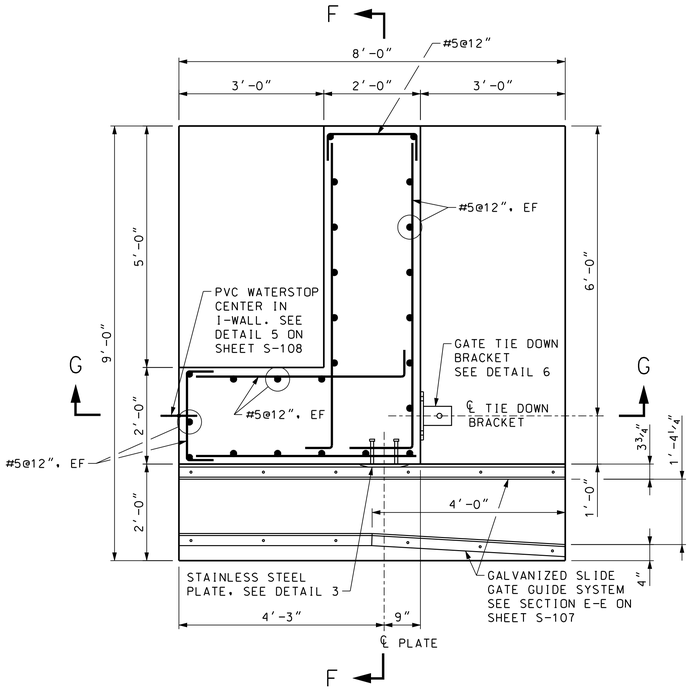

PLAN

SCALE: ¾" = 1'-0"
NORTHWEST ABUTMENT AS SHOWN
SOUTHWEST ABUTMENT SIMILAR

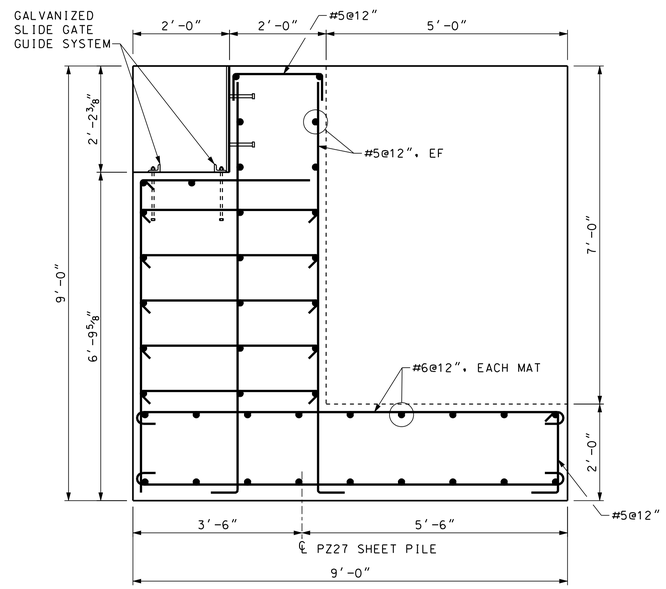

SECTION F-F

SCALE: ¾" = 1'-0"

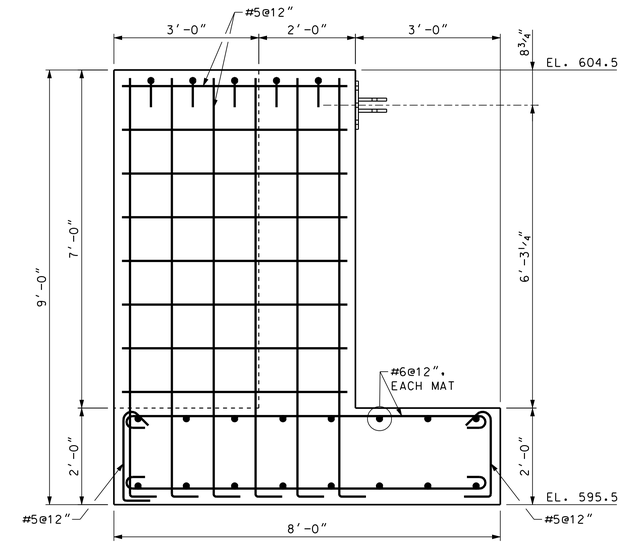

SECTION G-G

SCALE: ¾" = 1'-0"

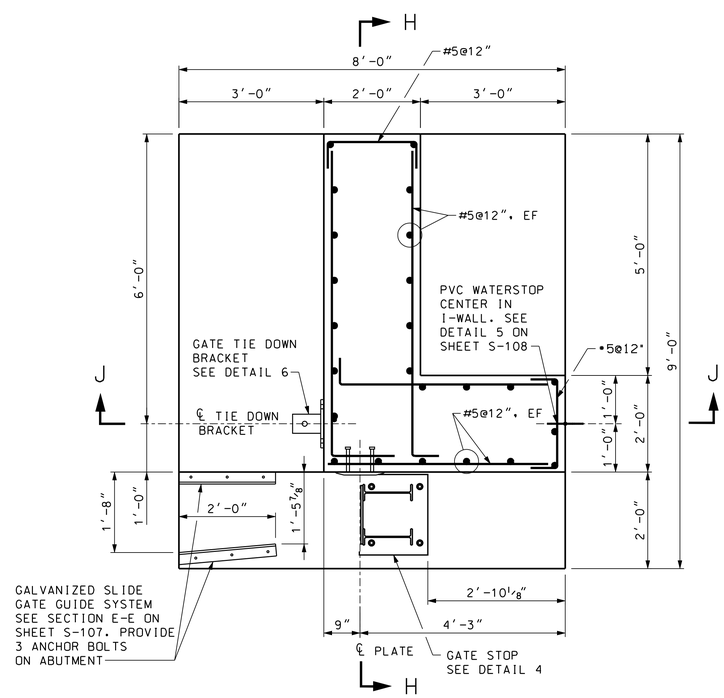

PLAN

SCALE: ¾" = 1'-0"
NORTHEAST ABUTMENT AS SHOWN
SOUTHEAST ABUTMENT SIMILAR

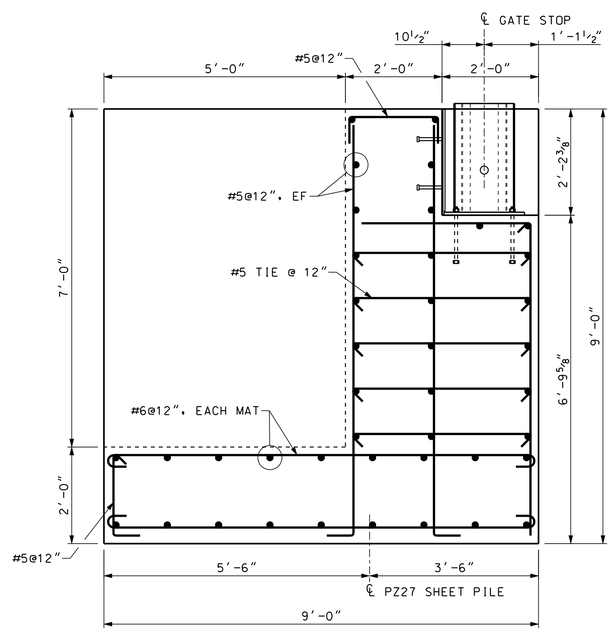

SECTION H-H

SCALE: ¾" = 1'-0"

NOTES:

1. CUT HOLES IN SHEET PILING FOR REBAR TO EXTEND THROUGH PILING.
2. CONCRETE COVER TO REBAR SHALL BE 3".
3. PROVIDE ¾" x ¾" CHAMFER AT ALL EXPOSED EDGES.
4. CONTRACTOR TO BE AWARE OF FIBER-OPTIC LINE BELOW NORTH ABUTMENT FOUNDATIONS.

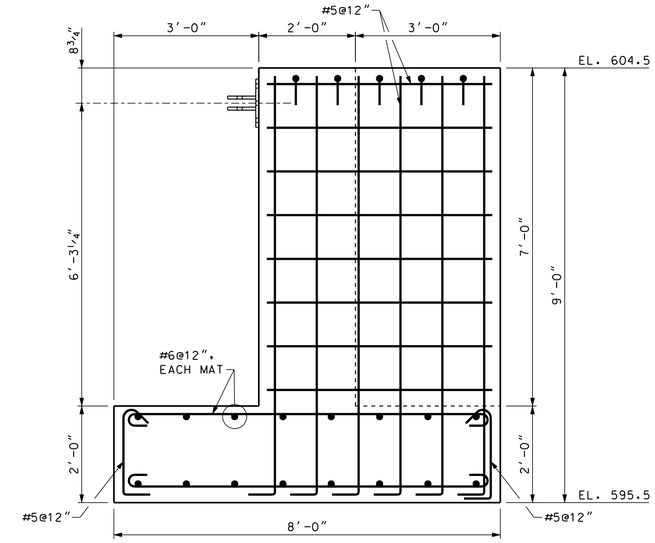

SECTION J-J

SCALE: ¾" = 1'-0"

GRAPHIC SCALE

1 0 1 2FT

SCALE: ¾" = 1'-0"

US Army Corps of Engineers
Chicago District

SYMBOL	AMENDMENT DESCRIPTION	DATE APPROVED	SYMBOL	DESCRIPTION	DATE APPROVED

DESIGNED BY: RJB
DATE: JUNE 2007
DRAWN BY: RWH
SCALE: AS SHOWN
CHECKED BY: PJS
SOLICITATION NUMBER: W912P6-07-B-0006
SUBMITTED BY: Robert Burslynowicz
DATE:

U.S. ARMY ENGINEER DISTRICT
CORPS OF ENGINEERS
CHICAGO, ILLINOIS

Bergmann associates

LITTLE CALUMET RIVER, INDIANA
LOCAL FLOOD PROTECTION
STAGE V, PHASE 2

RAILROAD SLIDE GATE CLOSURE
ABUTMENT PLANS AND SECTIONS

SHEET REFERENCE NUMBER:
S-104
SHEET 126 OF 138

PLOT DATE: 8/3/2007
FILENAME: D:\working\dms24897\S104 - Abut Plans and Sections.dgn

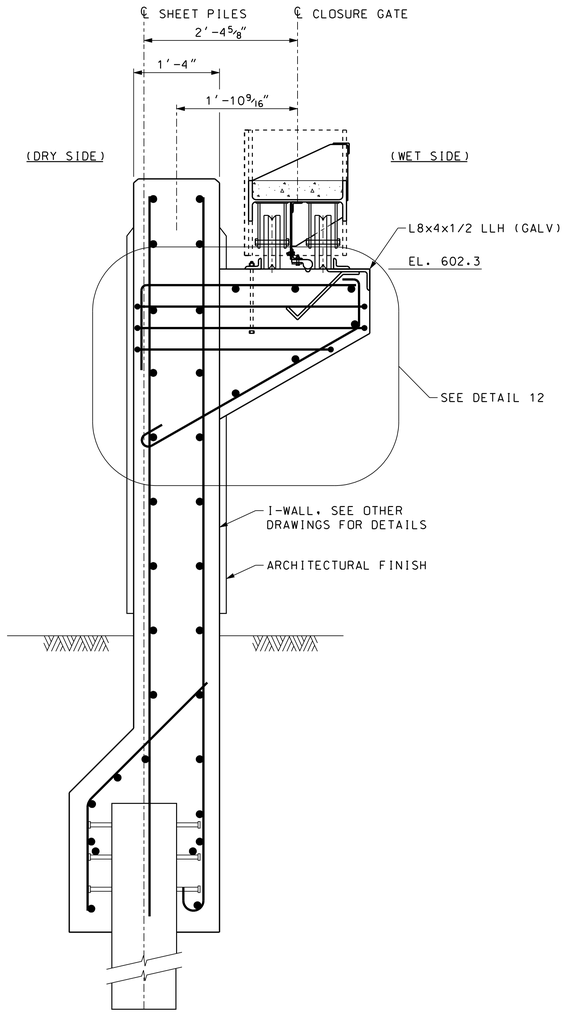

SECTION X-X

(NORTH CLOSURE)
SCALE: 1″ = 1′-0″

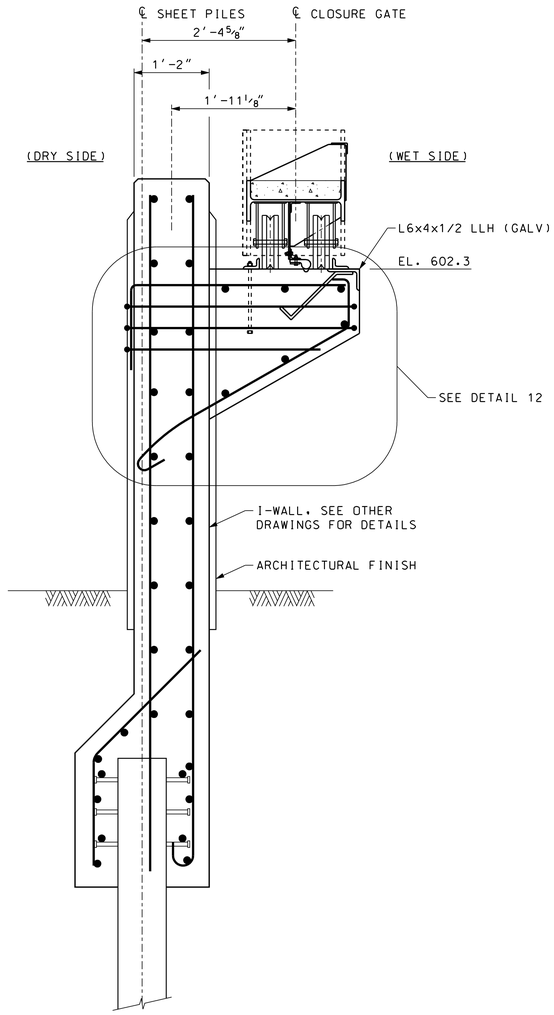

SECTION Y-Y

(SOUTH CLOSURE)
SCALE: 1″ = 1′-0″

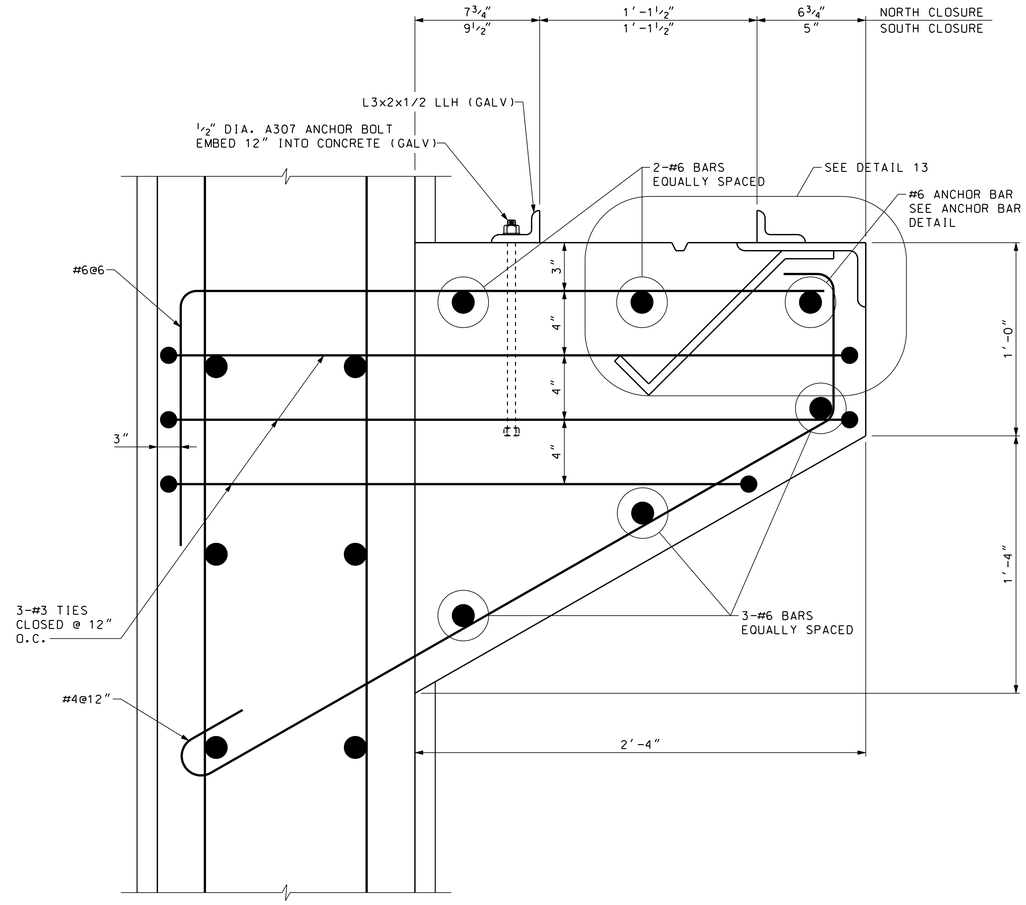

DETAIL 12

SCALE: 3″ = 1′-0″

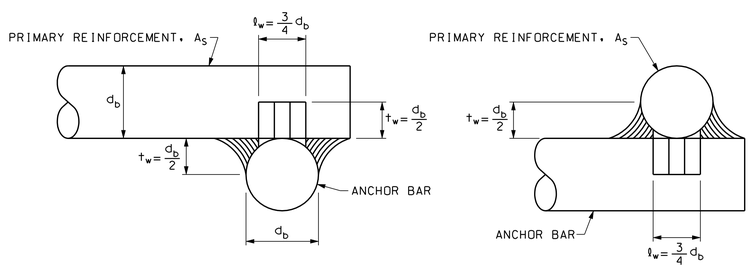

ANCHOR BAR DETAIL

NOT TO SCALE

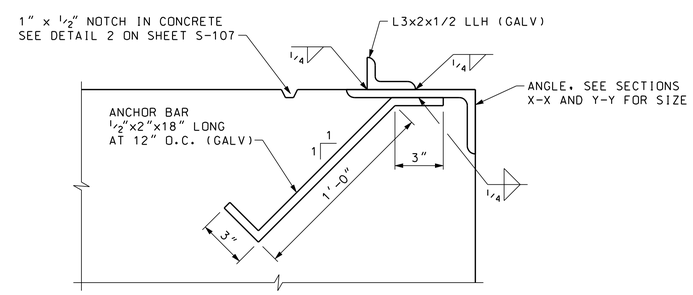

DETAIL 13

SCALE: 3″ = 1′-0″

GRAPHIC SCALES

1 0 1 2FT
SCALE: 1″= 1′-0″

6IN 0 6IN
SCALE: 3″= 1′-0″

US Army Corps of Engineers
Chicago District

SYMBOL	AMENDMENT DESCRIPTION	DATE APPROVED	SYMBOL	DESCRIPTION	DATE APPROVED

DESIGNED BY: RJB
DATE: JUNE 2007
DRAWN BY: RWH
SCALE: AS SHOWN
CHECKED BY: PJS
SOLICITATION NUMBER: W912P6-07-B-0006
SUBMITTED BY: Robert Burstynowicz
DATE:

U.S. ARMY ENGINEER DISTRICT
CORPS OF ENGINEERS
CHICAGO, ILLINOIS

Bergmann associates

LITTLE CALUMET RIVER, INDIANA
LOCAL FLOOD PROTECTION
STAGE V, PHASE 2
RAILROAD SLIDE GATE CLOSURE
SECTIONS AND DETAILS

SHEET REFERENCE NUMBER:
S-105
SHEET 127 OF 138

PLOT DATE: 8/13/2007
FILENAME: D:\working\dms24897\S105 - Sections and Details.dgn

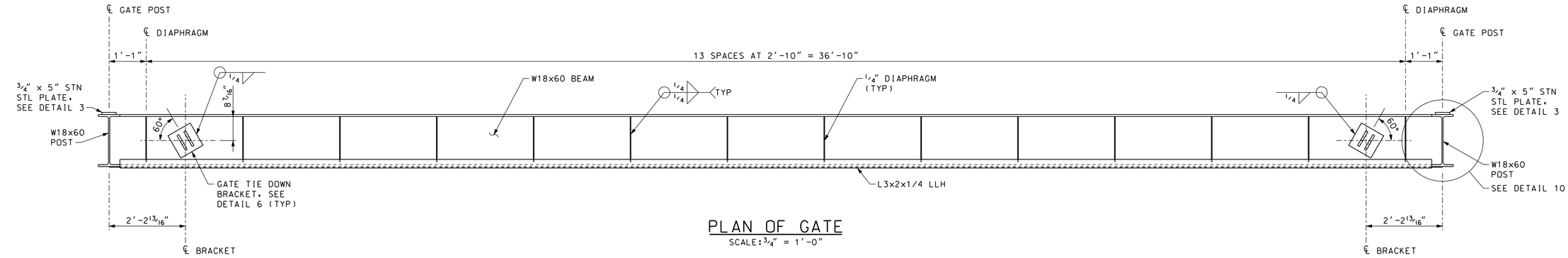

PLAN OF GATE

SCALE: 3/4" = 1'-0"

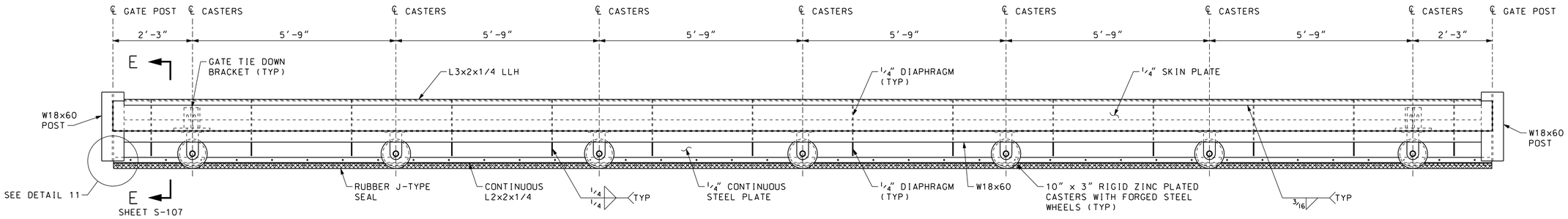

GATE ELEVATION

SCALE: 3/4" = 1'-0"

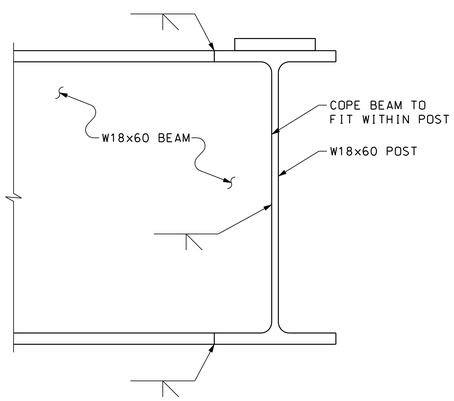

DETAIL 10

SCALE: 3" = 1'-0"

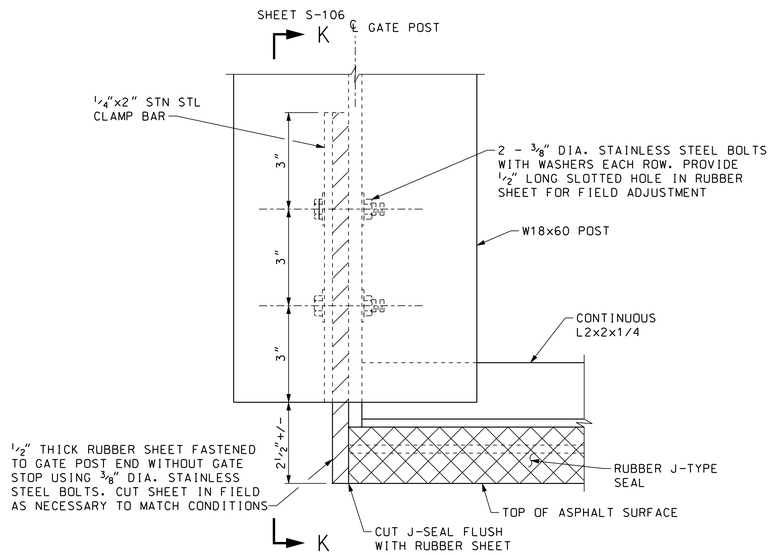

DETAIL 11

SCALE: 6" = 1'-0"

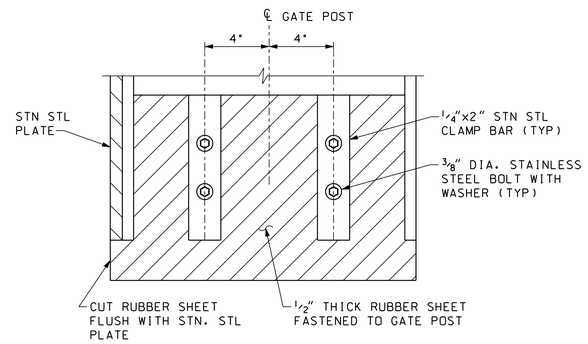

SECTION K-K

SCALE: 3" = 1'-0"

GRAPHIC SCALES

1 0 1 2FT
SCALE: 3/4" = 1'-0"

6IN 0 6IN
SCALE: 3" = 1'-0"

3IN 0 3IN
SCALE: 6" = 1'-0"

US Army Corps of Engineers
Chicago District

SYMBOL	AMENDMENT DESCRIPTION	DATE	APPROVED	SYMBOL	DESCRIPTION	DATE	APPROVED

DESIGNED BY: RJB | DATE: JUNE 2007
DRAWN BY: RWH | SCALE: AS SHOWN
CHECKED BY: PJS | SOLICITATION NUMBER: W912P6-07-B-0006
SUBMITTED BY: Robert Burstynowicz | DATE:

U.S. ARMY ENGINEER DISTRICT
CORPS OF ENGINEERS
CHICAGO, ILLINOIS

Bergmann associates

LITTLE CALUMET RIVER, INDIANA
LOCAL FLOOD PROTECTION
STAGE V, PHASE 2

RAILROAD SLIDE GATE CLOSURE
SLIDE GATE PLAN AND ELEVATION

SHEET REFERENCE NUMBER:
S-106
SHEET 128 OF 138

PLOT DATE: 8/3/2007
FILENAME: D:\working\dms24897\S106 - Gate Details.dgn

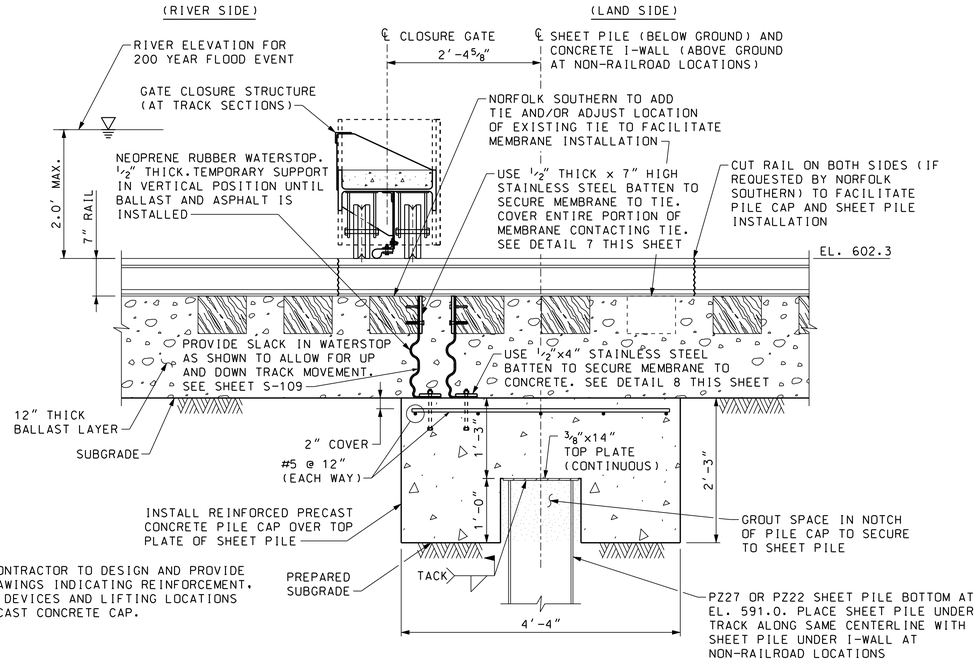

NOTE: CONTRACTOR TO DESIGN AND PROVIDE SHOP DRAWINGS INDICATING REINFORCEMENT, LIFTING DEVICES AND LIFTING LOCATIONS FOR PRECAST CONCRETE CAP.

SECTION D-D

SCALE: 1" = 1'-0"

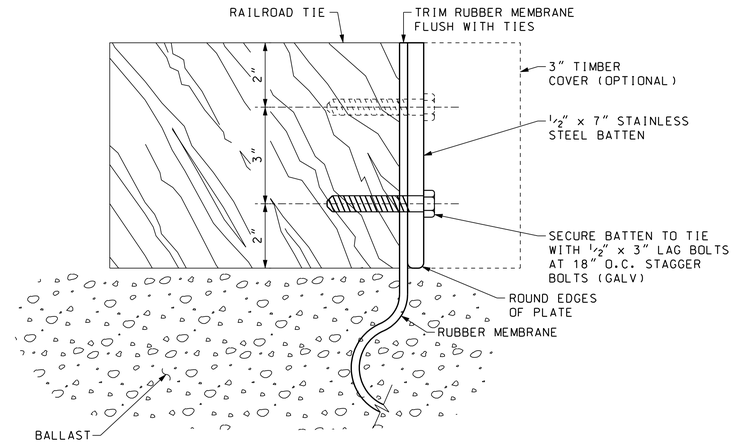

DETAIL 7

SCALE: 6" = 1'-0"

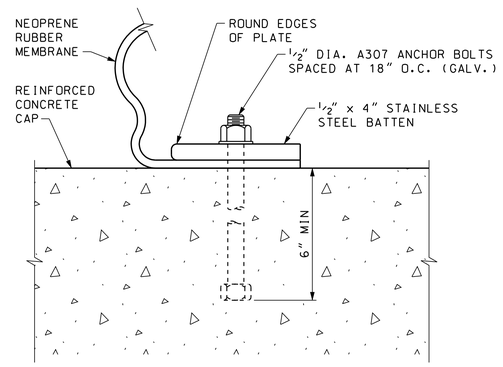

DETAIL 8

SCALE: 6" = 1'-0"

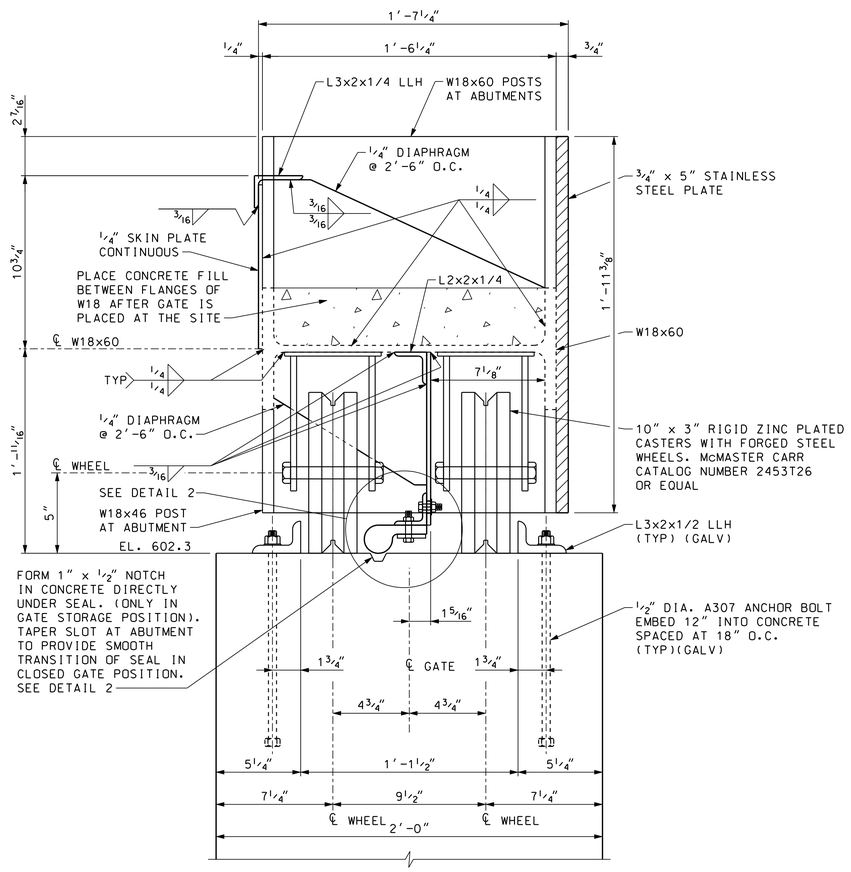

SECTION E-E

SCALE: 3" = 1'-0"

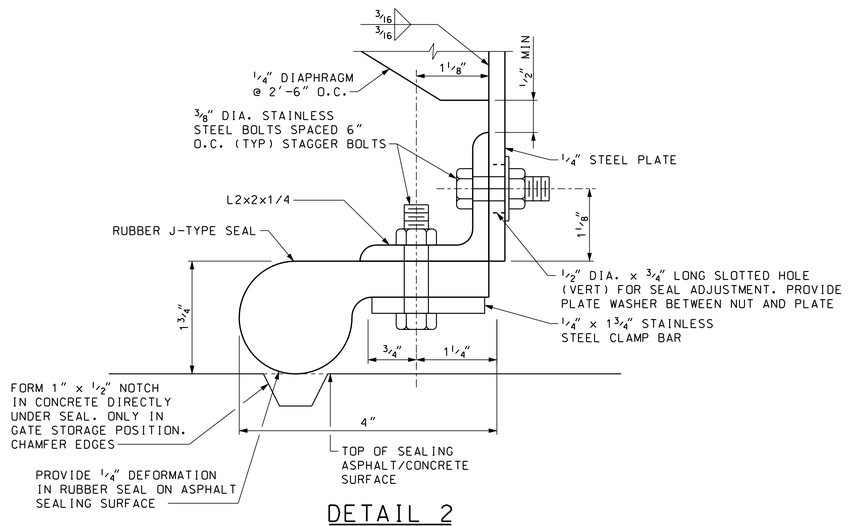

DETAIL 2

SCALE: 12" = 1'-0"

GRAPHIC SCALES

1 0 1 2FT — SCALE: 1"=1'-0"

6IN 0 6IN — SCALE: 3"= 1'-0"

3IN 0 3IN — SCALE: 6"= 1'-0"

1 1/2 IN 0 1 1/2 IN — SCALE: 12"= 1'-0"

US Army Corps of Engineers Chicago District

SYMBOL	AMENDMENT DESCRIPTION	DATE APPROVED	SYMBOL	DESCRIPTION	DATE APPROVED

DESIGNED BY: RJB | DATE: JUNE 2007
DRAWN BY: RWH | SCALE: AS SHOWN
CHECKED BY: PJS | SOLICITATION NUMBER: W912P6-07-B-0006
SUBMITTED BY: Robert Burstynowicz | DATE:

U.S. ARMY ENGINEER DISTRICT
CORPS OF ENGINEERS
CHICAGO, ILLINOIS

Bergmann associates

LITTLE CALUMET RIVER, INDIANA
LOCAL FLOOD PROTECTION
STAGE V, PHASE 2

RAILROAD SLIDE GATE CLOSURE
SECTIONS AND DETAILS

SHEET REFERENCE NUMBER:
S-107

SHEET 129 OF 138

PLOT DATE: 8/3/2007
FILENAME: D:\working\dms24897\S107 - Sections and Details.dgn

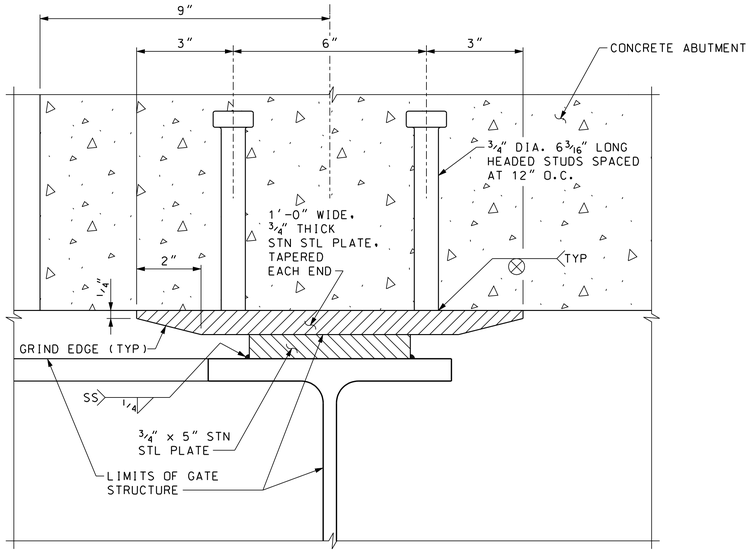

DETAIL 3

SCALE: 6" = 1'-0"

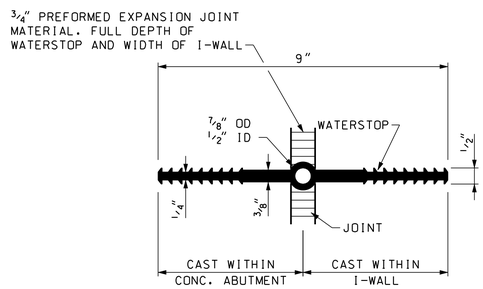

DETAIL 5 - WATERSTOP

SCALE: 6" = 1'-0"

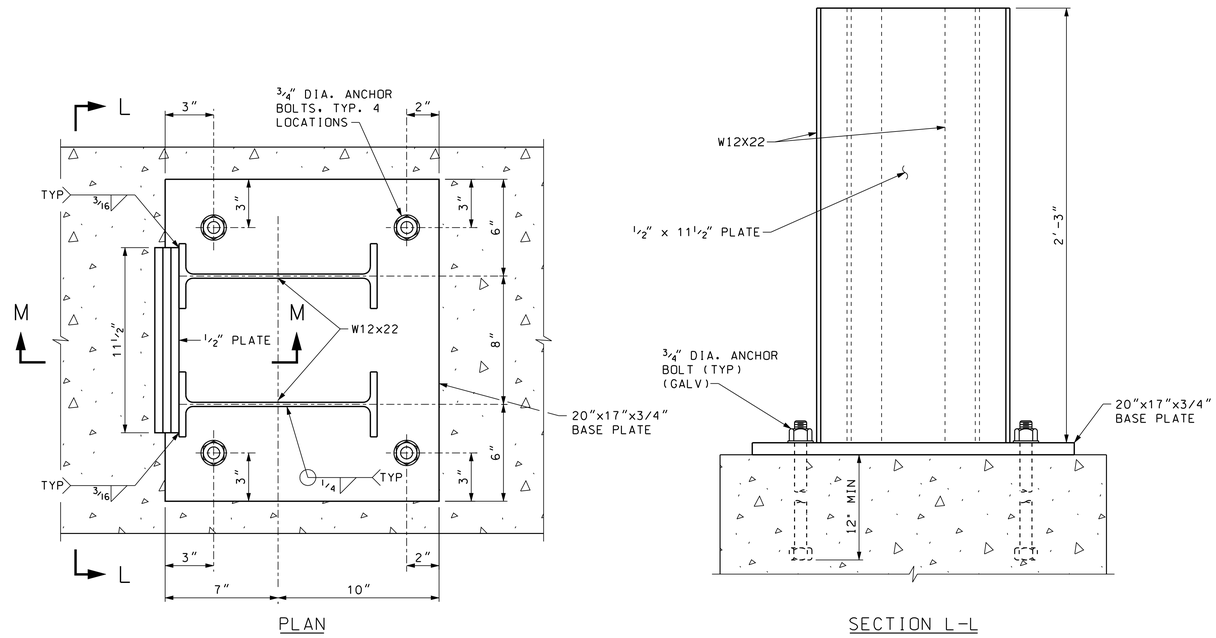

PLAN

SECTION L-L

DETAIL 4 - GATE STOP (GALV)

SCALE: 3" = 1'-0"

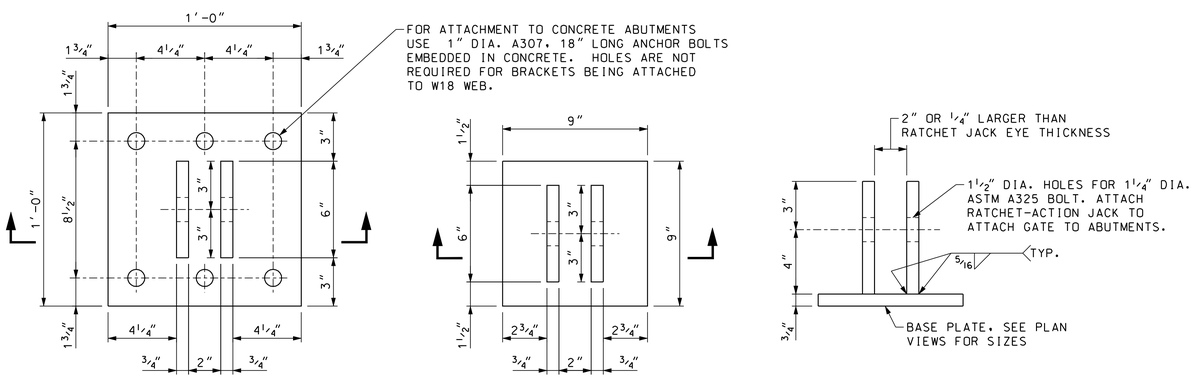

PLAN AT ABUTMENT

PLAN AT GATE

SECTION

DETAIL 6 - GATE TIE DOWN BRACKET (GALV)

SCALE: 3" = 1'-0"

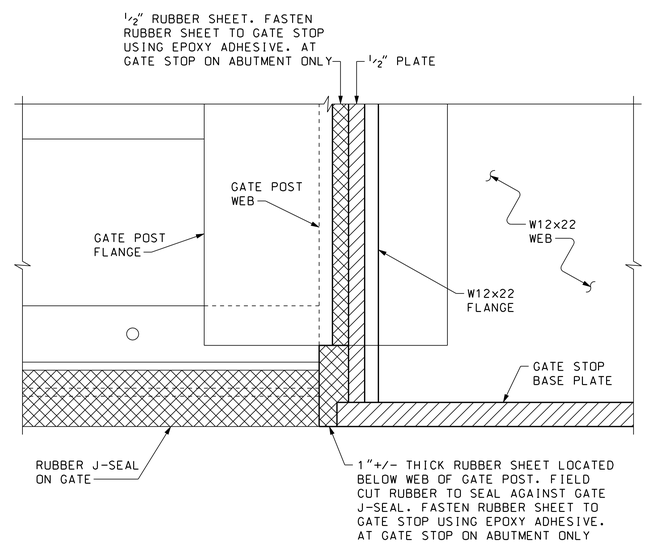

SECTION M-M

SCALE: 6" = 1'-0"

GRAPHIC SCALES

6IN 0 6IN
SCALE: 3"= 1'-0"

3IN 0 3IN
SCALE: 6"= 1'-0"

US Army Corps of Engineers
Chicago District

SYMBOL	AMENDMENT DESCRIPTION	DATE APPROVED	SYMBOL	DESCRIPTION	DATE APPROVED

DESIGNED BY: RJB
DATE: JUNE 2007
DRAWN BY: RWH
SCALE: AS SHOWN
CHECKED BY: PJS
SOLICITATION NUMBER: W912P6-07-B-0006
SUBMITTED BY: Robert Burstynowicz
DATE:

U.S. ARMY ENGINEER DISTRICT
CORPS OF ENGINEERS
CHICAGO, ILLINOIS

Bergmann associates

LITTLE CALUMET RIVER, INDIANA
LOCAL FLOOD PROTECTION
STAGE V, PHASE 2
RAILROAD SLIDE GATE CLOSURE DETAILS

SHEET REFERENCE NUMBER:
S-108
SHEET 130 OF 138

PLOT DATE: 8/13/2007
FILENAME: D:\working\dms24897\S108 - Details.dgn

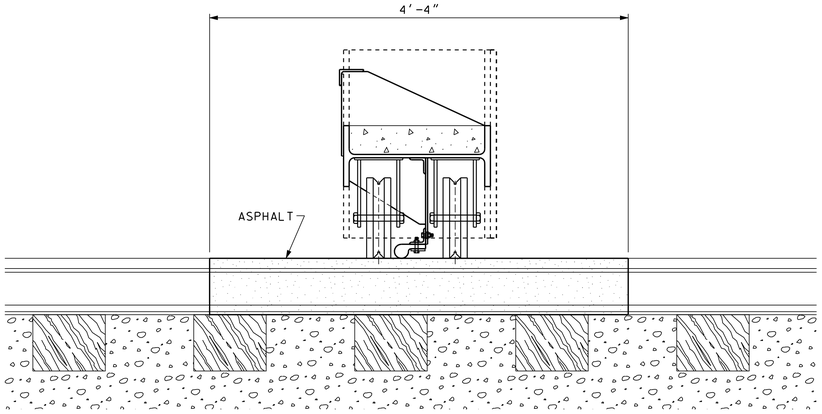

SECTION N-N

SCALE: 1½" = 1'-0"

NOTE:
CONCRETE CAP AND RUBBER MEMBRANE
NOT SHOWN FOR CLARITY.

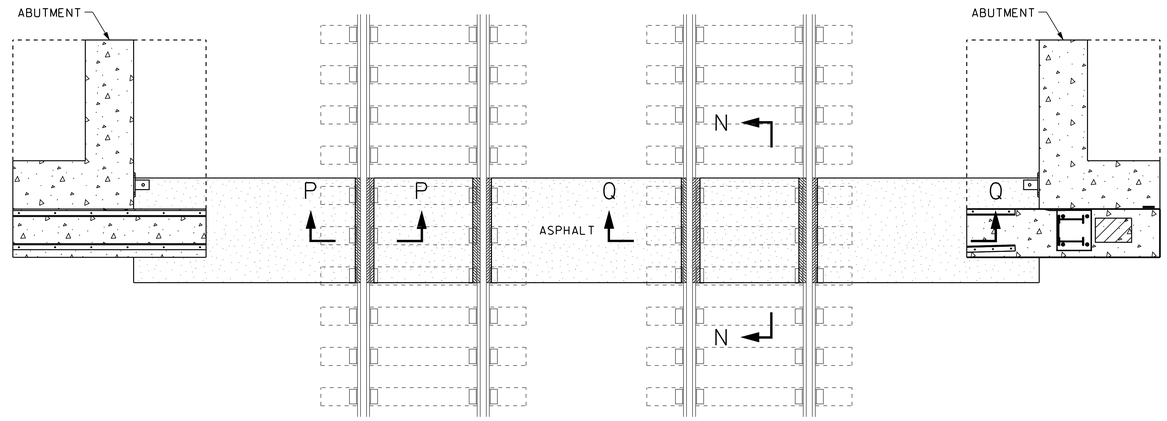

PLAN - ASPHALT GATE CROSSING

SCALE: ⅜" = 1'-0"

ALL SPIKES FOR 110# THRU 141# RAIL SHALL
BE DRIVEN IN HOLES AS SHOWN BELOW.

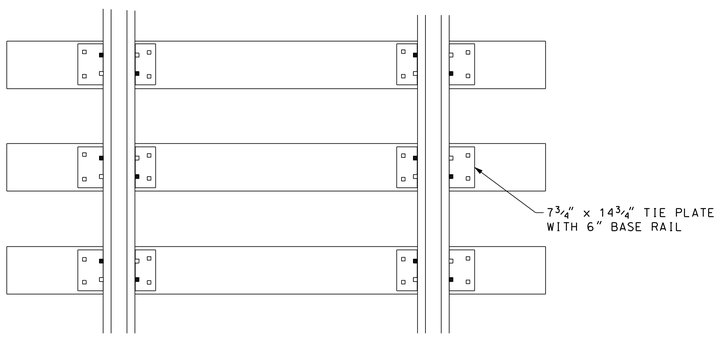

SPIKING PATTERN

NOT TO SCALE

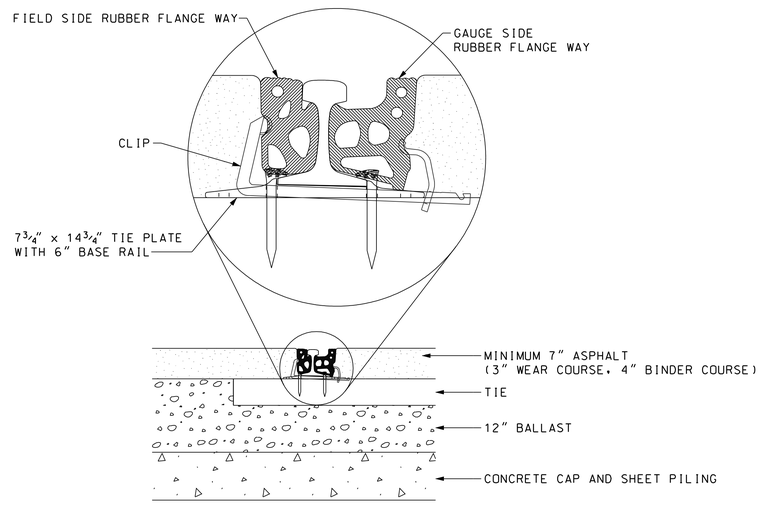

SECTION P-P

NOT TO SCALE

RUBBER FLANGE WAY NOTES

CLEAN BASE, WEB AND UNDER THE HEAD OF THE RAILS.

FASTEN LENGTHS TOGETHER WITH END CLIPS AND LAY RUBBER AGAINST THE RAIL.

INSTALL CLIPS UNDER BOTH RAILS BETWEEN EVERY TIE IN THE CROSSING.

RUBBER FLANGE WAY FOR 100-LB RAIL	270	995291
RUBBER FLANGE WAY FOR 110RE THROUGH 115RE RAIL	270	991789
RUBBER FLANGE WAY FOR 132RE THROUGH 141AB RAIL	270	008791

(INCLUDES ALL HARDWARE AND IS FURNISHED IN 8 TRACK FOOT SECTIONS)

TIE PLATE NOTES

STANDARD TIE PLATES TO BE USED FOR 6" BASE RAIL ARE 7¾" x 14¾".

PAVING NOTES

PROVIDE TOP OF ASPHALT AT TOP OF RUBBER FLANGE WAYS FOR THE WIDTH OF THE CROSSING.

IN FULL DEPTH CROSSINGS, LAY ASPHALT IN TWO LIFTS.

JAM STONE OR ASPHALT UNDER FLANGE WAY BETWEEN TIES - BOTH FIELD AND GAGE SIDES. FILL ALL VOIDS.

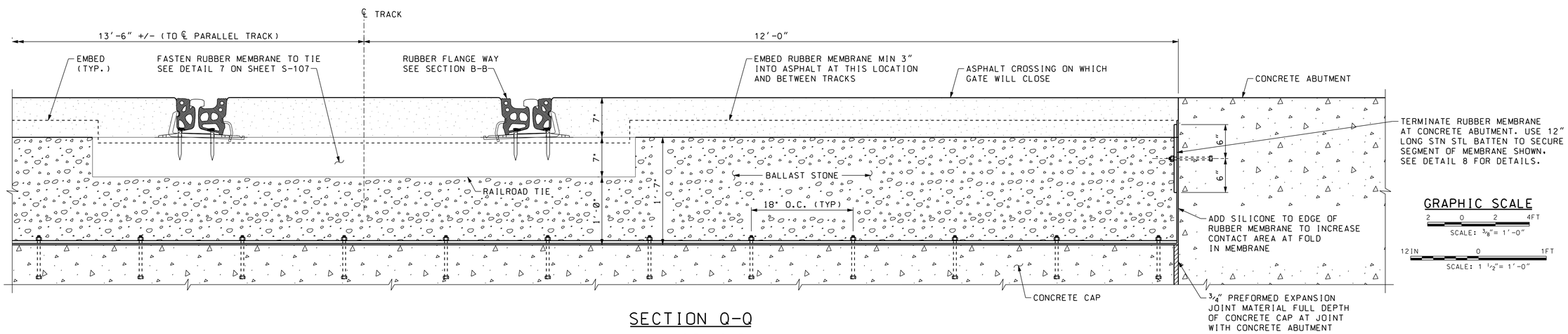

SECTION Q-Q

SCALE: 1½" = 1'-0"

GRAPHIC SCALE

2 0 2 4FT
SCALE: ⅜" = 1'-0"

12IN 0 1FT
SCALE: 1 ½" = 1'-0"

US Army Corps of Engineers
Chicago District

SYMBOL	AMENDMENT DESCRIPTION	DATE APPROVED	SYMBOL	DESCRIPTION	DATE APPROVED

DESIGNED BY: RJB
DATE: JUNE 2007
DRAWN BY: RWH
SCALE: AS SHOWN
CHECKED BY: PJS
SOLICITATION NUMBER: W912P6-07-B-0006
SUBMITTED BY: Robert Burslynowicz
DATE:

U.S. ARMY ENGINEER DISTRICT
CORPS OF ENGINEERS
CHICAGO, ILLINOIS

Bergmann associates

LITTLE CALUMET RIVER, INDIANA
LOCAL FLOOD PROTECTION
STAGE V, PHASE 2

RAILROAD SLIDE GATE CLOSURE
ASPHALT RAIL CROSSING

SHEET REFERENCE NUMBER:
S-109

SHEET 131 OF 138

PLOT DATE: 8/5/2007
FILENAME: D:\working\dm24897\S109 - Asphalt Rail Crossing.dgn

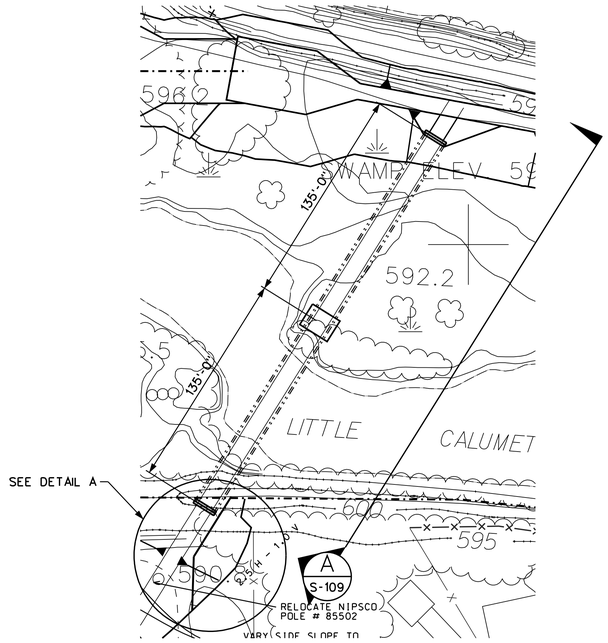

WEST OF KENNEDY AVE. PLAN

SCALE 1" = 40'-0"

NOTE: USE ABUTMENT PILE PLAN A

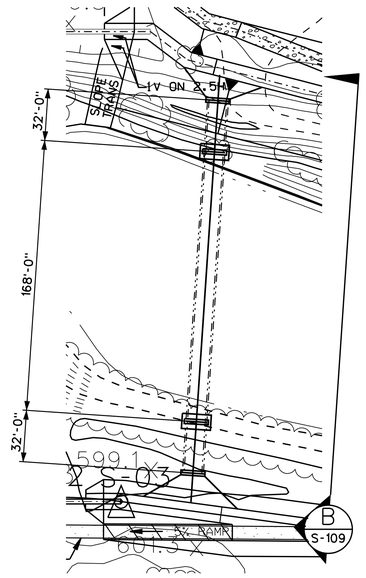

EAST OF KENNEDY AVE. PLAN

SCALE 1" = 40'-0"

NOTE: USE ABUTMENT PILE PLAN B

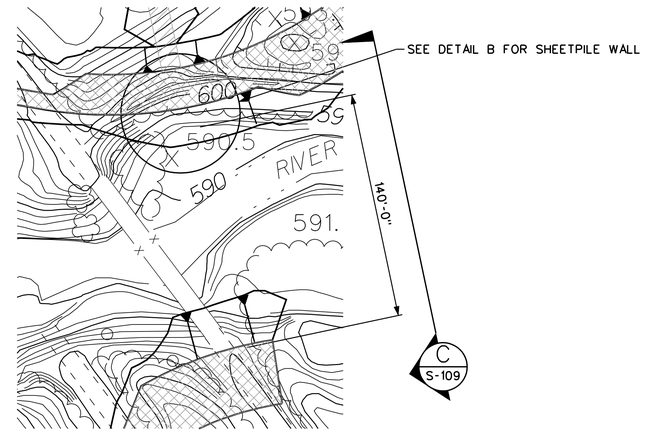

WEST OF INDIANAPOLIS BLVD. PLAN

SCALE 1" = 40'-0"

NOTE: USE ABUTMENT PILE PLAN C

N

NOTES:

1. ADDITIONAL ABUTMENT DETAILS ARE SHOWN ON S-109, S-110, AND R-09.
2. ADDITIONAL SHEET PILE WALL DETAILS ARE SHOWN ON S-109.
3. ELEVATION VIEWS ARE SHOWN ON S-109.

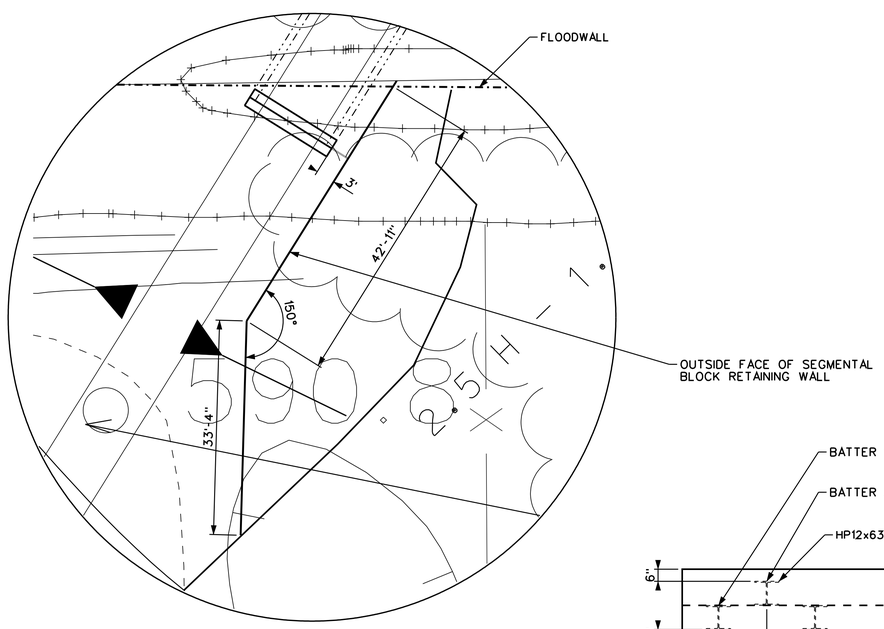

DETAIL A

SCALE 1" = 10'-0"

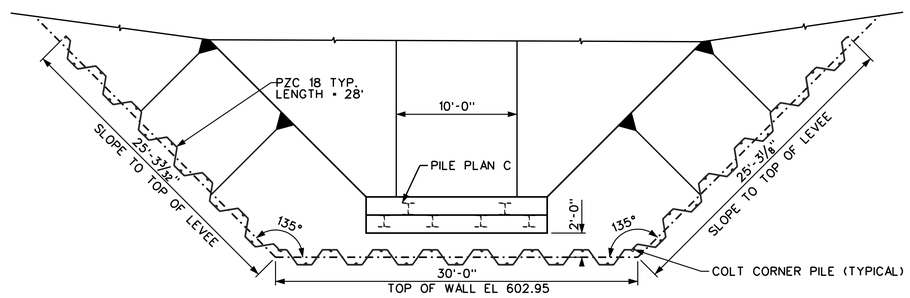

DETAIL B

SCALE: 3/16" = 1'-0"

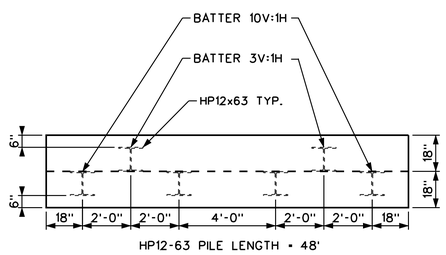

ABUTMENT PILE PLAN A

SCALE: 3/8" = 1'-0"

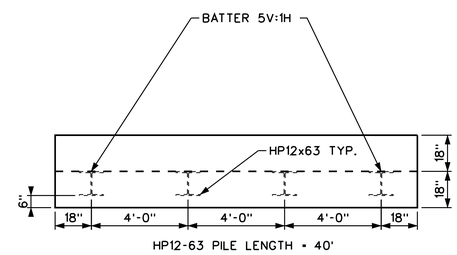

ABUTMENT PILE PLAN B

SCALE: 3/8" = 1'-0"

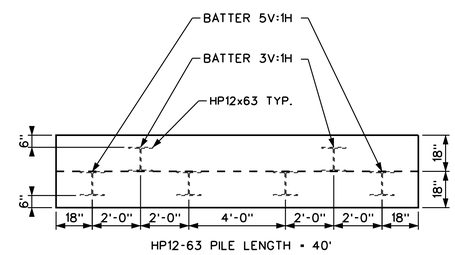

ABUTMENT PILE PLAN C

SCALE: 3/8" = 1'-0"

US Army Corps of Engineers
Chicago District

SYMBOL	AMENDMENT DESCRIPTION	DATE APPROVED	SYMBOL	DESCRIPTION	DATE APPROVED

U.S. ARMY ENGINEER DISTRICT
CORPS OF ENGINEERS
HUNTINGTON, WEST VIRGINIA

DESIGNED BY: ECV	DATE: 1 JUNE 2007
DRAWN BY: ECV	SCALE: 3/8" = 1'-0"
CHECKED BY: SAW	SOLICITATION NUMBER: W912P6-07-B-0006
Scott Wheeler SUBMITTED BY:	DATE: 08 MARCH 2007

LITTLE CALUMET RIVER, INDIANA
LOCAL FLOOD PROTECTION
STAGE VI PHASE 1 - SOUTH

PEDESTRIAN BRIDGES
BRIDGE AND ABUTMENT PLANS

SHEET REFERENCE NUMBER:
S-109A

SHEET 132 OF 138

PLOT DATE: 8/6/2007
FILENAME: D:\working\ems24670\S-108.dgn

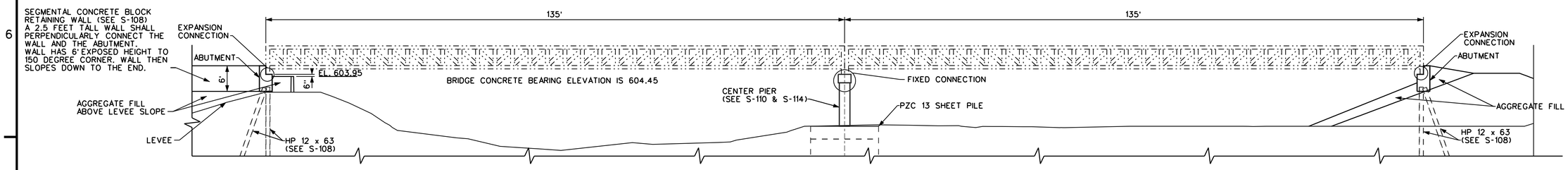

ELEVATION WEST OF KENNEDY AVENUE (A / S-108)

SCALE 3/32" = 1'-0"

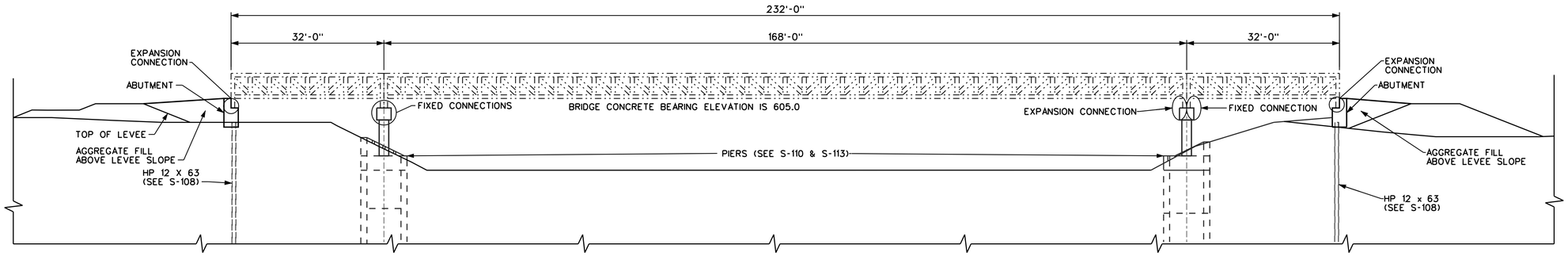

ELEVATION EAST OF KENNEDY AVENUE (B / S-108)

SCALE 3/32" = 1'-0"

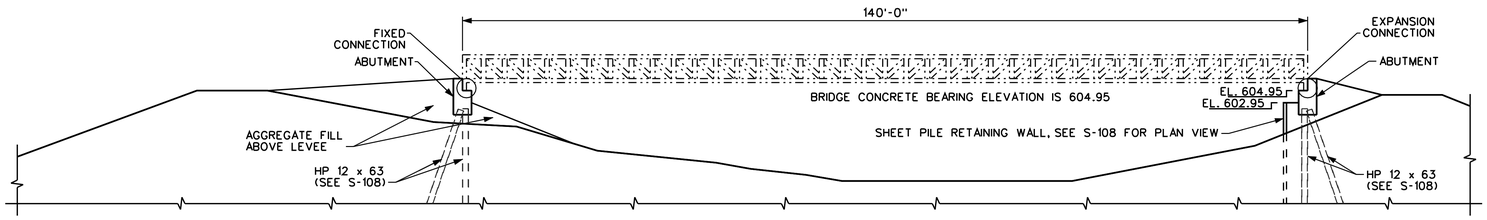

ELEVATION WEST OF INDIANAPOLIS BLVD (C / S-108)

SCALE 3/32" = 1'-0"

GENERAL NOTES:

1. PEDESTRIAN BRIDGE DECK ELEVATION AND THE TOP OF ABUTMENT ELEVATION MAY VARY BASED ON VARIOUS BRIDGE DESIGNS. THE BOTTOM ELEVATION OF THE BRIDGE MUST BE ABOVE THE LEVEL OF PROTECTION. A TWO (2) INCH GROUT PAD IS REQUIRED TO KEEP DEBRIS OFF OF THE EXPANSION BEARING AREA. GROUT PAD SHALL BE OVERSIZED ONE (1) INCH ON OPEN SIDES.
2. EACH BRIDGE SHALL HAVE BEARINGS AT EQUAL ELEVATIONS.
3. BRIDGE SPANS ARE SHOWN AS OUT TO OUT DIMENSIONS.
4. BRIDGE EXPANSION JOINTS SHALL ALLOW FOR TEMPERATURE MOVEMENTS FROM -20 TO 100 DEGREES FAHRENHEIT. MOVEMENT SHALL BE ALLOWED THROUGH SLOTTED HOLES ON THE BRIDGE CONNECTION DETAILS.
5. ALL H-PILES HAVE A TOTAL LENGTH WHICH INCLUDES 12 INCHES OF CONCRETE EMBEDMENT.
6. ALL FILL MATERIAL PLACED AROUND ABUTMENTS SHALL NOT HAVE A SLOPE THAT EXCEEDS 2.5H:1V. FILL ON THE RIVER SIDE OF THE ABUTMENTS SHALL BE TWO (2) FEET BELOW THE BEARING SURFACE.

US Army Corps of Engineers
Chicago District

SYMBOL	AMENDMENT DESCRIPTION	DATE APPROVED	SYMBOL	DESCRIPTION	DATE APPROVED

DESIGNED BY: ECV — DATE: 1 JUNE 2007
DRAWN BY: ECV — SCALE: 3/32" = 1'-0"
CHECKED BY: SAW — SOLICITATION NUMBER: W912P6-07-B-0006
SUBMITTED BY: Scott Wheeler — DATE: 08 MARCH 2007

U.S. ARMY ENGINEER DISTRICT
CORPS OF ENGINEERS
HUNTINGTON, WEST VIRGINIA

LITTLE CALUMET RIVER, INDIANA
LOCAL FLOOD PROTECTION
STAGE VI PHASE 1 - SOUTH

PEDESTRIAN BRIDGE ELEVATIONS

SHEET REFERENCE NUMBER:
S-109B

SHEET 133 OF 138

PLOT DATE: 8/6/2007
FILENAME: D:\working\dms24670\S-109.dgn

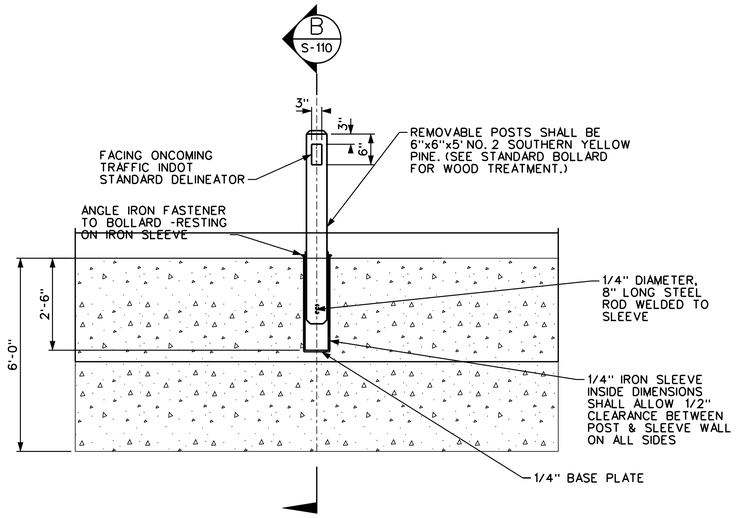

SECTION A

SCALE: N.T.S.

VEHICLE BARRIER TYPE 1 DETAILS

NOTE: SEE R-09 FOR ADDITIONAL VEHICLE BARRIER REQUIREMENTS

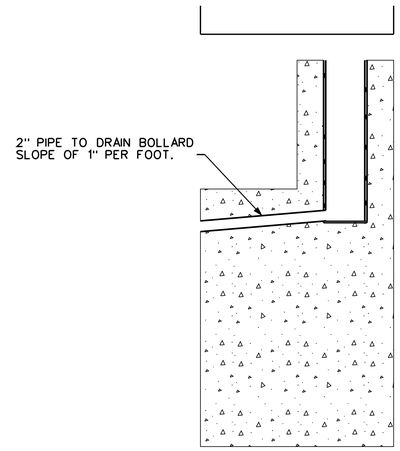

SECTION B

SCALE: 1"=1'

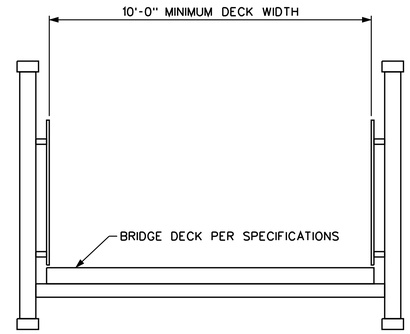

SAMPLE BRIDGE SECTION

SCALE: N.T.S.

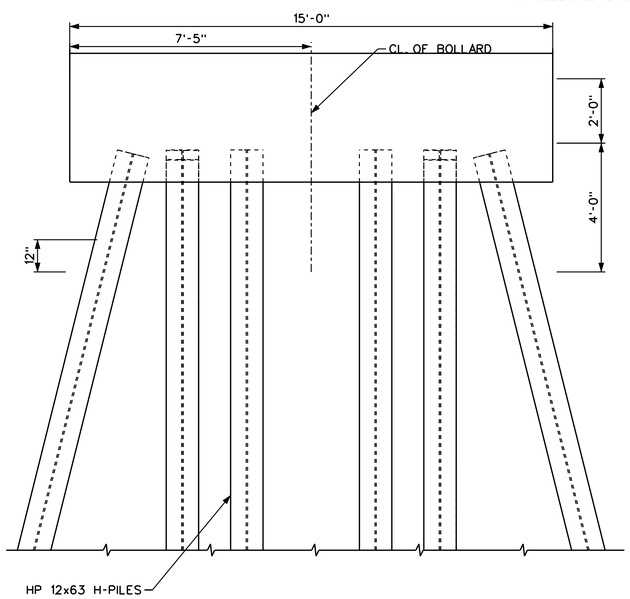

TYPICAL ELEVATION SECTION A

SCALE: 1" = 2'

SEE S-108 FOR PILE BATTER DETAILS

TYPICAL 18"x1" DIA. THREADED BAR - ASTM A354, GRADE BC ZINC COATED WITH 1' DIA. HEAVY HEX NUTS - ASTM A563, GRADE DH AND 2 1/2" O.D. CIRCULAR WASHER-ASTM F436, TYPE 1. HOT-DIPPED ZINC COATING ON THREADED BARS. BRIDGE FABRICATOR SHALL VERIFY ANCHORAGE CAPACITY FOR SELECTED BRIDGE TYPE.

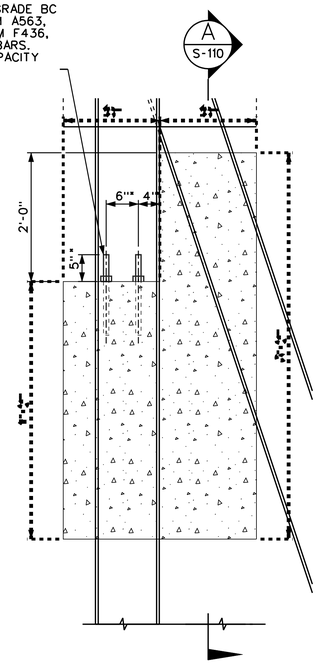

TYPICAL ABUTMENT SECTION

SCALE: 1" = 1'

*NOTE:
VERIFY DIMENSIONS WITH BRIDGE MAUFACTURER, PRIOR TO CONSTRUCTION

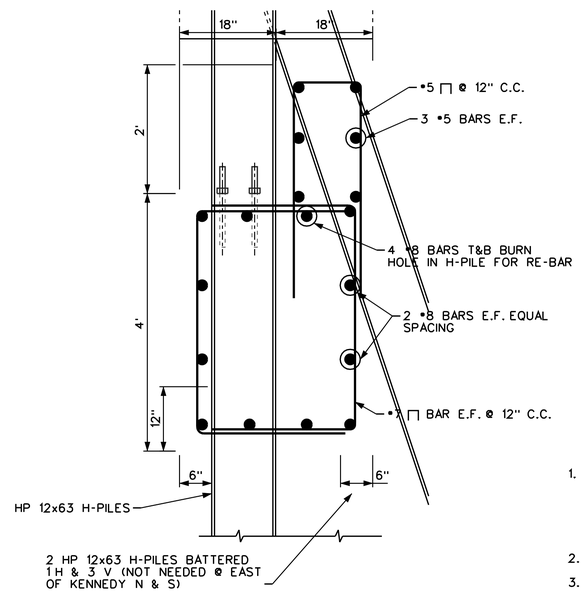

TYPICAL RE-STEEL DETAIL

SCALE: 1" = 1'

GENERAL NOTES:

1. PEDESTRIAN BRIDGE DECK ELEVATION AND THE TOP OF ABUTMENT ELEVATION MAY VARY BASED ON VARIOUS BRIDGE DESIGNS. THE BOTTOM ELEVATION OF THE BRIDGE MUST BE ABOVE THE LEVEL OF PROTECTION. A TWO (2) INCH GROUT PAD IS REQUIRED TO KEEP DEBRIS OFF OF THE EXPANSION BEARING AREA. GROUT PAD SHALL BE OVERSIZED ONE (1) INCH ON OPEN SIDES.
2. EACH BRIDGE SHALL HAVE BEARINGS AT EQUAL ELEVATIONS.
3. BRIDGE SPANS ARE SHOWN AS OUT TO OUT DIMENSIONS.
4. BRIDGE EXPANSION JOINTS SHALL ALLOW FOR TEMPERATURE MOVEMENTS FROM -20 TO 100 DEGREES FAHRENHEIT. MOVEMENT SHALL BE ALLOWED THROUGH SLOTTED HOLES ON THE BRIDGE CONNECTION DETAILS.
5. ALL H-PILES HAVE A TOTAL LENGTH WHICH INCLUDES 12 INCHES OF CONCRETE EMBEDMENT.

US Army Corps of Engineers
Chicago District

SYMBOL	AMENDMENT DESCRIPTION	DATE APPROVED	SYMBOL	DESCRIPTION	DATE APPROVED

U.S. ARMY ENGINEER DISTRICT
CORPS OF ENGINEERS
HUNTINGTON, WEST VIRGINIA

DESIGNED BY: ECV | DATE: MAY 2007
DRAWN BY: ABC | SCALE: 1" = 10'-0"
CHECKED BY: SAW | SOLICITATION NUMBER: W912P6-07-B-0006
Scott Wheeler | 08 MARCH 2007
SUBMITTED BY: | DATE:

LITTLE CALUMET RIVER, INDIANA
LOCAL FLOOD PROTECTION
STAGE VI PHASE 1 - SOUTH

PEDESTRIAN BRIDGE
TYPICAL ABUTMENT
DETAILS

SHEET REFERENCE NUMBER:
S-110

PLOT DATE: 8/3/2007
FILENAME: D:\working\ams24670\S-110.dgn

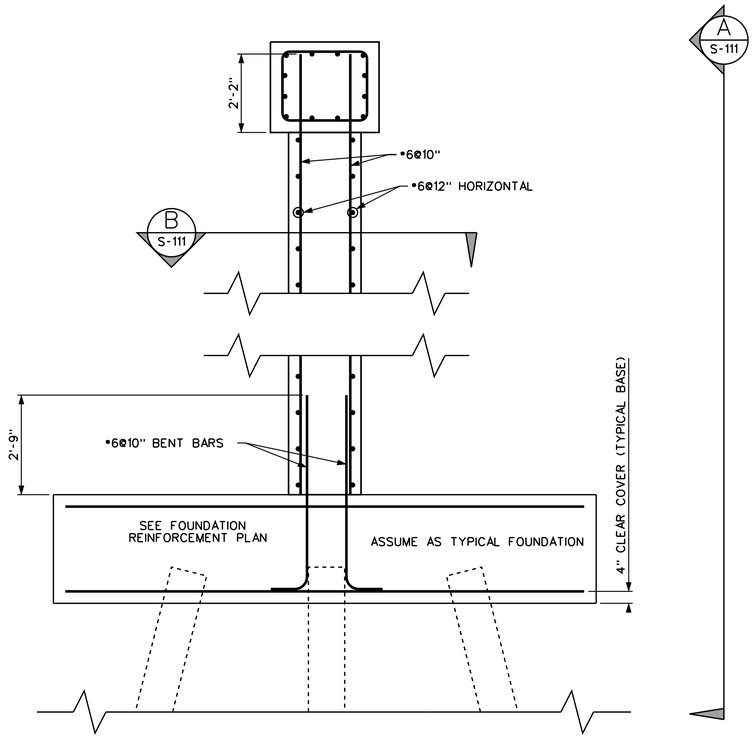

TYPICAL PIER REINFORCEMENT SECTION

SCALE: 1/4 " = 1'-0"

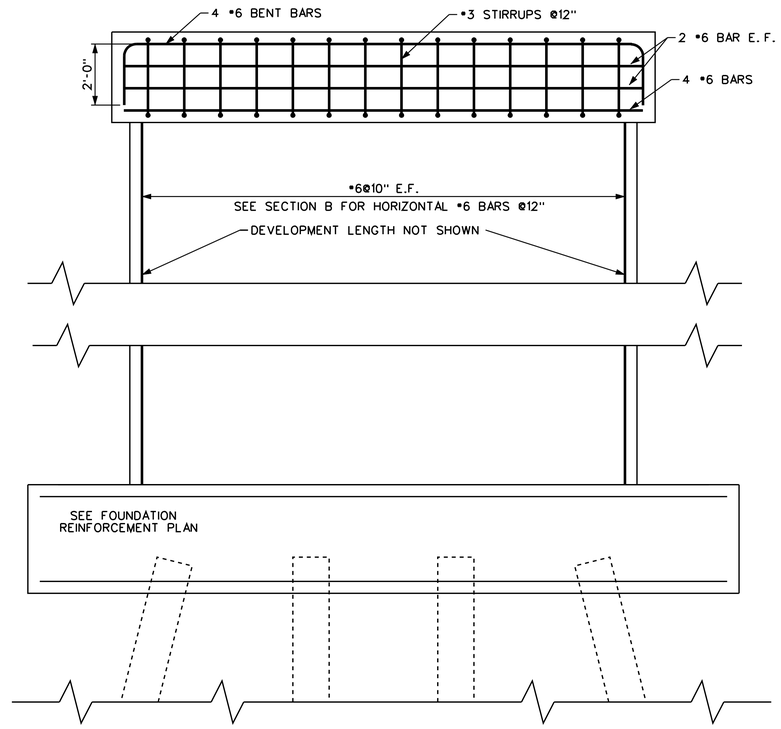

TYPICAL PIER REINFORCEMENT VIEW A

SCALE: 1/4 " = 1'-0"

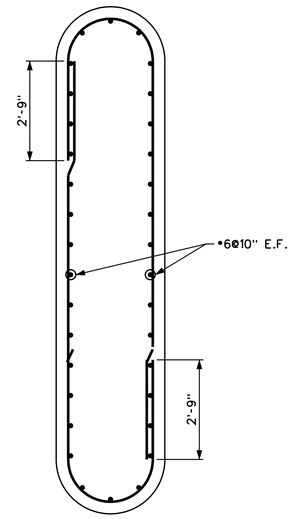

TYPICAL PIER REINFORCEMENT SECTION B

SCALE: 1/4 " = 1'-0"

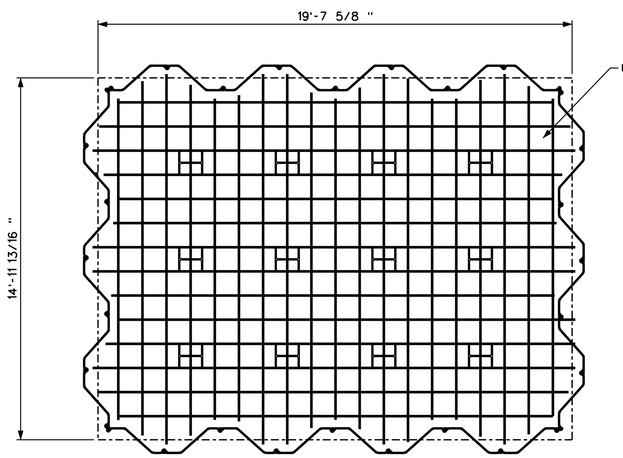

NOTE: BURN HOLE IN WEB OF H-PILES TO PASS BARS.

WEST OF KENNEDY AVENUE CENTER PIER FOUNDATION PLAN

SCALE: 3/8" = 1'-0"

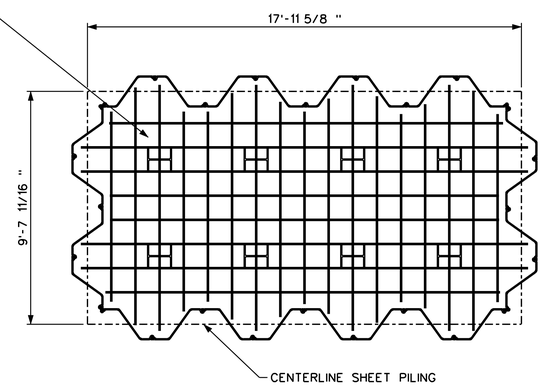

NOTE: BURN HOLE IN WEB OF H-PILES TO PASS BARS.

TYPICAL EAST OF KENNEDY AVENUE PIER FOUNDATION PLAN

SCALE: 3/8" = 1'-0"

REQUIRED: 2

NOTES:

1. ALL BEARING SURFACES SHALL BE AT A CONSTANT ELEVATION FOR EACH BRIDGE.
2. ALL H-PILES LENGTHS INCLUDE 12 INCHES OF CONCRETE EMBEDMENT.
3. GRIND TOP EDGES SMOOTH ON ALL SHEET PILING.
4. CONCRETE CLEAR COVER SHALL BE 3 INCHES UNLESS OTHERWISE NOTED.

US Army Corps of Engineers
Chicago District

SYMBOL	AMENDMENT DESCRIPTION	DATE APPROVED	SYMBOL	DESCRIPTION	DATE APPROVED

DESIGNED BY: ECV
DATE: 1 JUNE 2007
DRAWN BY: ECV
SCALE: 3/8" = 1'-0"
CHECKED BY: SAW
SOLICITATION NUMBER: W912P6-07-B-0006
Scott Wheeler
SUBMITTED BY:
DATE: 08/02/2004

U.S. ARMY ENGINEER DISTRICT
CORPS OF ENGINEERS
HUNTINGTON, WEST VIRGINIA

LITTLE CALUMET RIVER, INDIANA
LOCAL FLOOD PROTECTION
STAGE VI PHASE 1 - SOUTH

PEDESTRIAN BRIDGE
PIER ELEVATION AND PLAN

SHEET REFERENCE NUMBER:
S-111

SHEET 135 OF 138

PLOT DATE: 8/13/2007
FILENAME: D:\working\dms24670\S-111.dgn

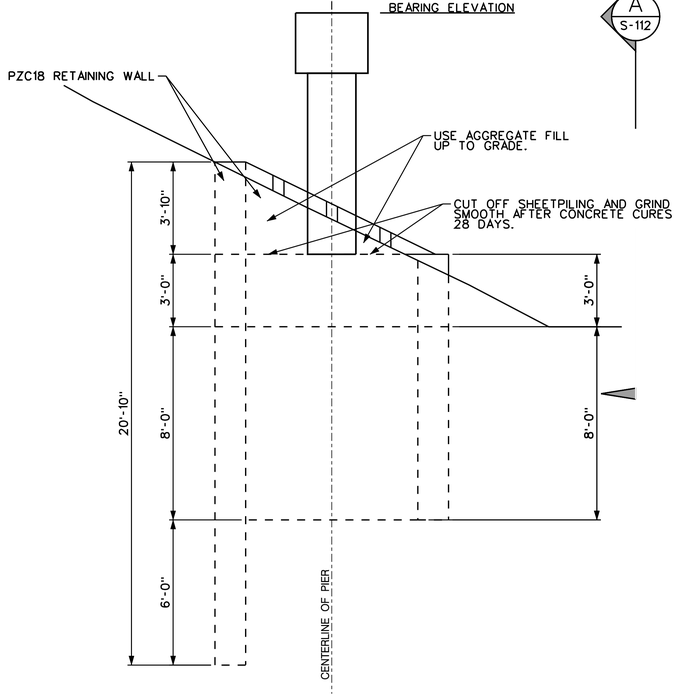

EAST OF KENNEDY AVENUE SOUTH PIER ELEVATION

SCALE: 3/8" = 1'-0"

NOTE: H-PILES NOT SHOWN FOR CLARITY

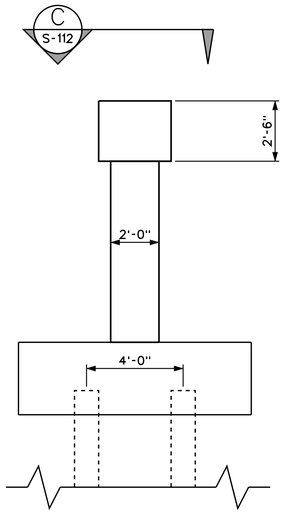

TYPICAL PIER VIEW B

SCALE: 3/8" = 1'-0"

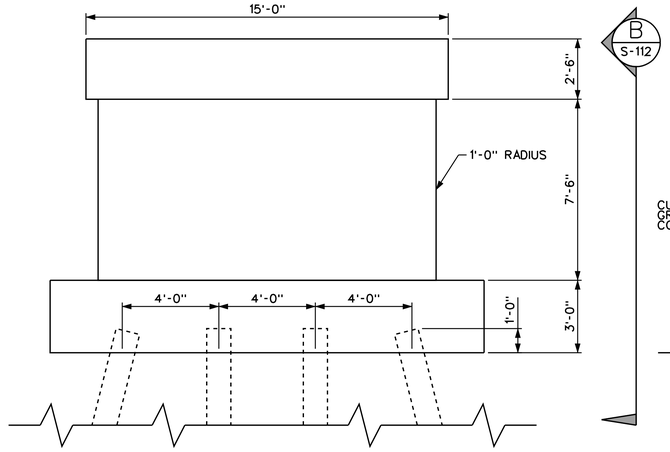

TYPICAL PIER VIEW A

SCALE: 3/8" = 1'-0"

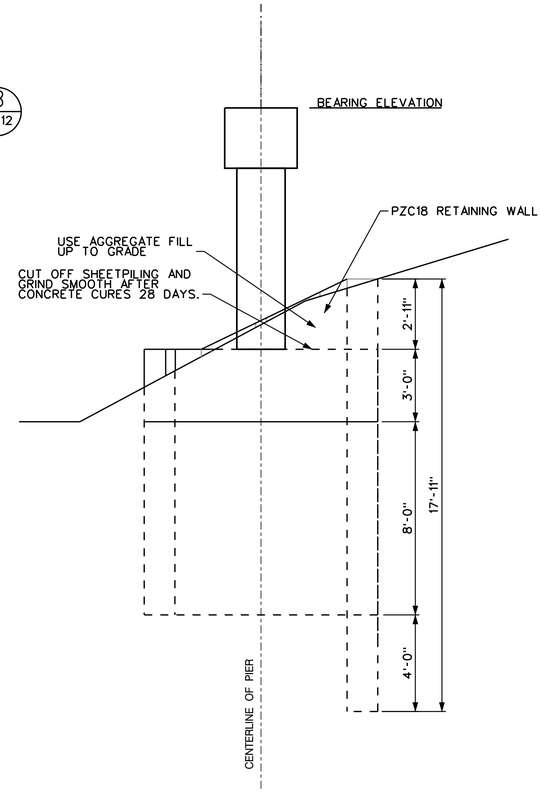

EAST OF KENNEDY AVENUE NORTH PIER ELEVATION

SCALE: 3/8" = 1'-0"

NOTE: H-PILES NOT SHOWN FOR CLARITY

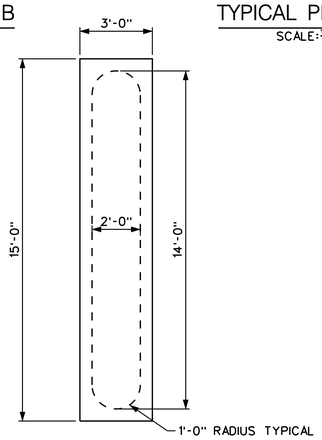

TYPICAL PIER VIEW C

SCALE: 3/8" = 1'-0"

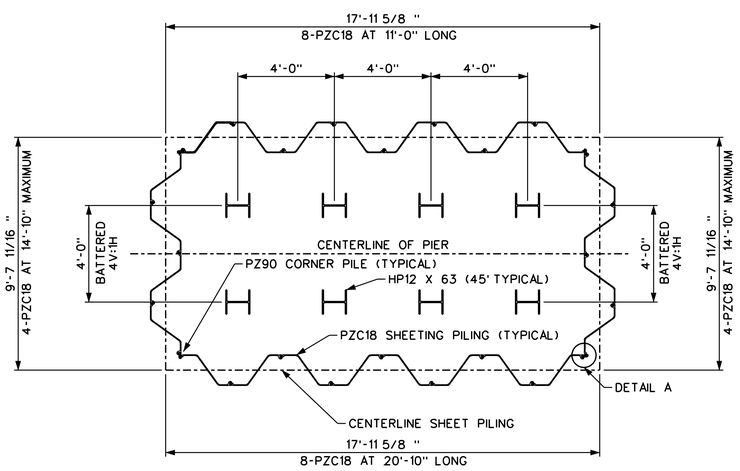

SOUTH PIER FOUNDATION PLAN

SCALE: 3/8" = 1'-0"

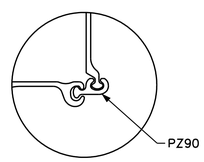

DETAIL A

SCALE: 1/16 " = 1'-0"

NOTES:

1. ALL BEARING SURFACES SHALL BE AT A CONSTANT ELEVATION FOR EACH BRIDGE.
2. ALL H-PILES LENGTHS INCLUDE 12 INCHES OF CONCRETE EMBEDMENT, EXCEPT AS NOTED.
3. GRIND TOP EDGES SMOOTH ON ALL SHEET PILING.
4. BRIDGE ANCHORAGE TO THE PIER SHALL BE TYPICAL WITH ABUTMENTS AS SHOWN ON S-110.
5. CONCRETE REINFORCEMENT DETAILS SHOWN ON S-111.

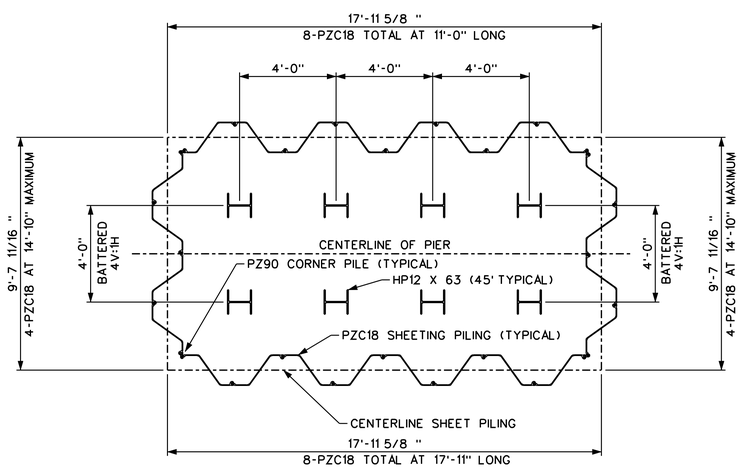

NORTH PIER FOUNDATION PLAN

SCALE: 3/8" = 1'-0"

US Army Corps of Engineers
Chicago District

SYMBOL	AMENDMENT DESCRIPTION	DATE APPROVED	SYMBOL	DESCRIPTION	DATE APPROVED

DESIGNED BY: ECV | DATE: 1 JUNE 2007
DRAWN BY: ECV | SCALE: 3/8" = 1'-0"
CHECKED BY: SAW | SOLICITATION NUMBER: W912P6-07-B-0006
SUBMITTED BY: Scott Wheeler | DATE: 08/02/2004

U.S. ARMY ENGINEER DISTRICT
CORPS OF ENGINEERS
HUNTINGTON, WEST VIRGINIA

LITTLE CALUMET RIVER, INDIANA
LOCAL FLOOD PROTECTION
STAGE VI PHASE 1 - SOUTH

PEDESTRIAN BRIDGE
EAST OF KENNEDY AVENUE
PIER ELEVATION AND PLAN

SHEET REFERENCE NUMBER:
S-112

SHEET 136 OF 138

PLOT DATE: 8/3/2007
FILENAME: D:\working\ems24670\S-112.dgn

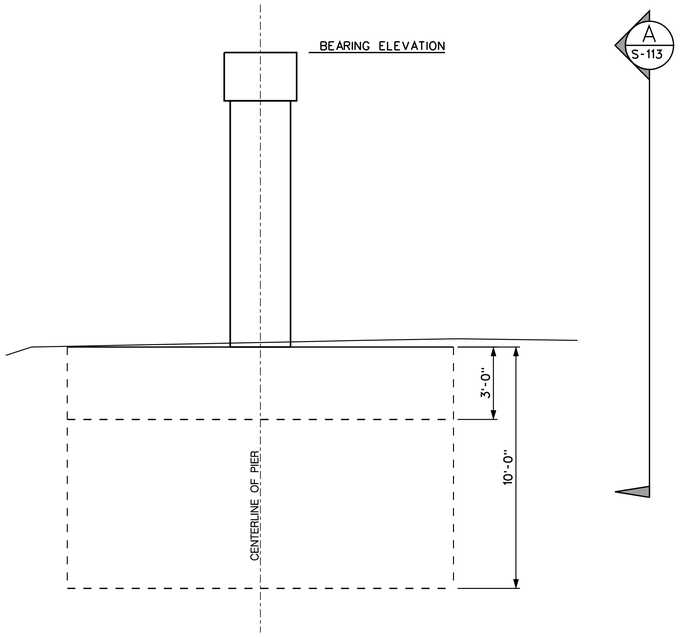

WEST OF KENNEDY AVENUE CENTER PIER ELEVATION

SCALE: 3/8" = 1'-0"
NOTE: H-PILES NOT SHOWN FOR CLARITY

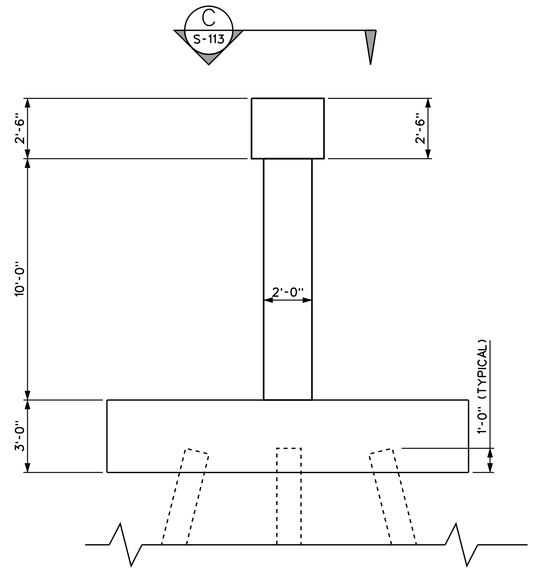

TYPICAL PIER VIEW B

SCALE: 3/8" = 1'-0"

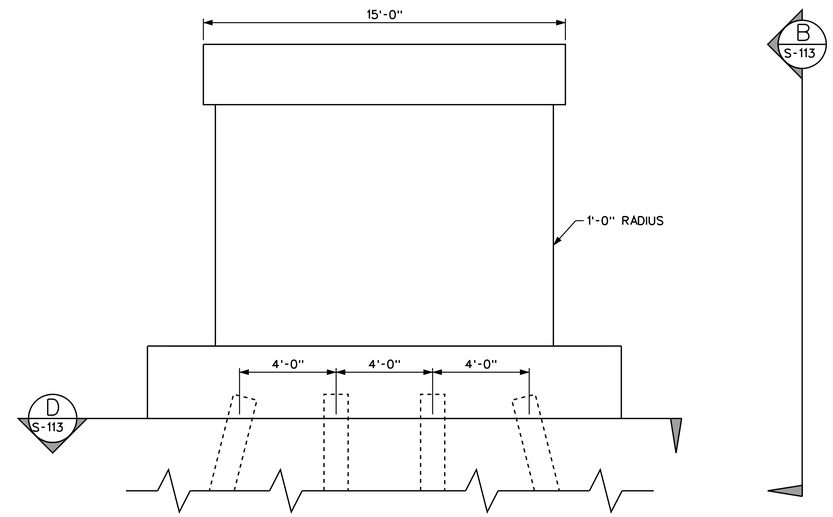

TYPICAL PIER VIEW A

SCALE: 3/8" = 1'-0"

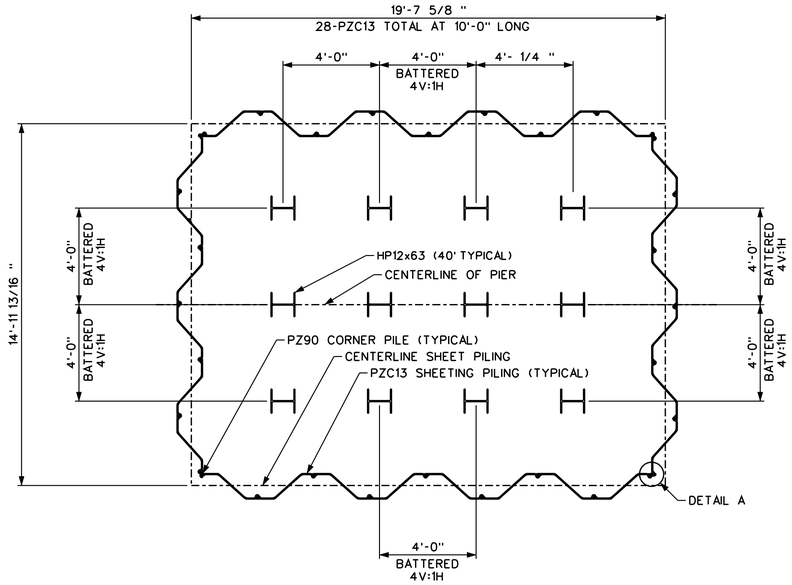

CENTER PIER FOUNDATION SECTION D

SCALE: 3/8" = 1'-0"

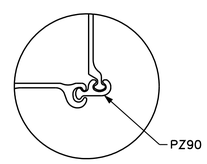

DETAIL A

SCALE: 1/16 " = 1'-0"

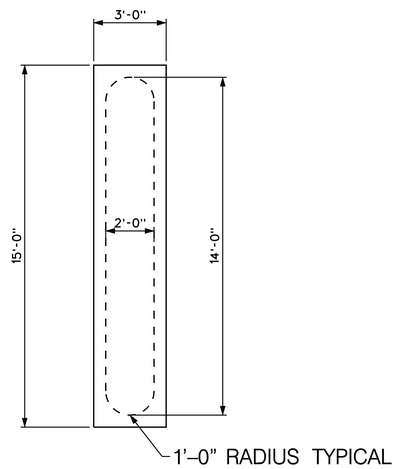

TYPICAL PIER VIEW C

SCALE: 3/8" = 1'-0"

NOTES:

1. ALL BEARING SURFACES SHALL BE AT A CONSTANT ELEVATION FOR EACH BRIDGE.
2. ALL H-PILES LENGTHS INCLUDE 12 INCHES OF EMBEDMENT, EXCEPT AS NOTED.
3. GRIND TOP EDGES SMOOTH ON ALL SHEET PILING.
4. BRIDGE ANCHORAGE TO THE PIER SHALL BE TYPICAL WITH ABUTMENTS AS SHOWN ON S-110.
5. REINFORCEMENT DETAILS SHOWN ON S-111.

US Army Corps of Engineers
Chicago District

SYMBOL	AMENDMENT DESCRIPTION	DATE	APPROVED	SYMBOL	DESCRIPTION	DATE	APPROVED

DESIGNED BY: ECV
DATE: 1 JUNE 2007
DRAWN BY: ECV
SCALE: 3/8" = 1'-0"
CHECKED BY: SAW
SOLICITATION NUMBER: W912P6-07-B-0006
Scott Wheeler
SUBMITTED BY:
DATE: 08/02/2004

U.S. ARMY ENGINEER DISTRICT
CORPS OF ENGINEERS
HUNTINGTON, WEST VIRGINIA

LITTLE CALUMET RIVER, INDIANA
LOCAL FLOOD PROTECTION
STAGE VI PHASE 1 - SOUTH

PEDESTRIAN BRIDGE
WEST OF KENNEDY AVENUE
PIER ELEVATION AND PLAN

SHEET REFERENCE NUMBER:
S-113

SHEET 137 OF 138

PLOT DATE: 8/3/2007
FILENAME: D:\working\dms24670\S-113.dgn

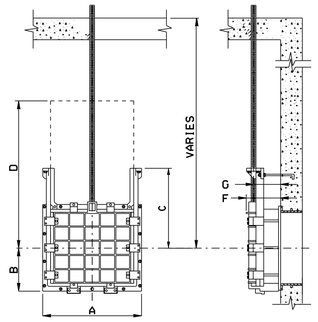

TYPICAL SLUICE GATE DETAIL
N.T.S.

SLUICE GATE SCHEDULE								
GATE LOCATION	NO. OF GATES	SIZE (IN.)	A	B	C	D	F	G
5S 2 + 29 *	1	42"	53"	26	44	69	9"	6"
5S 73 + 34	1	48"	59"	29	50	78	10	6"
6N 8 + 46	1	96"	107"	53"	99"	151"	14"	8"
6N 22 + 00	1	24"	34	17	26	42	9"	6"
6N 27 + 78	1	24"	34	17	26	42	9"	6"
6N 39 + 88	2	54"	67"	33"	57"	90"	15"	9"
6N 40 + 17	1	48"	59"	29	50	78	10	6"

* TO BE VERIFIED IN THE FIELD

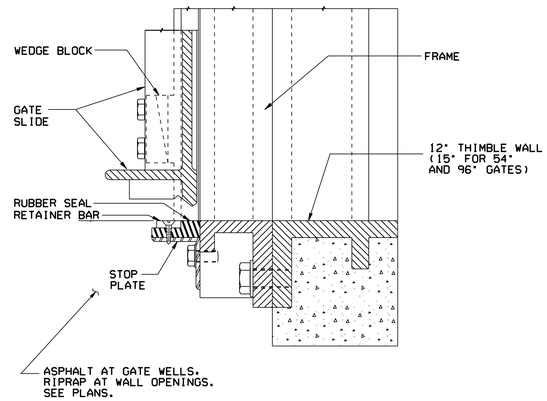

TYPICAL FLUSH BOTTOM ENCLOSURE
N.T.S.

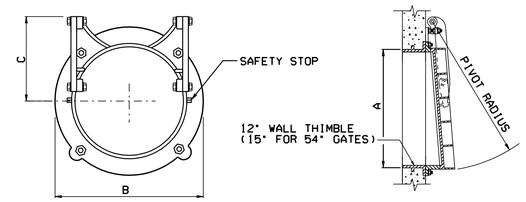

TYPICAL FLAP GATE DETAIL
N.T.S.

FLAP GATE SCHEDULE					
GATE LOCATION	GATE DESIGNATION	NO. OF GATES	A	B	C
5S 39+98	5-8C	1	24	32	19"
5S 73+34	5-7C	1	48	59½	38
6N 12+61	6-3C	1	24	32	19"
6N 22+00	6-5C	1	24	32	19"
6N 27+78	6-6C	1	24	32	19"
6N 34+38	6-7C	1	12	19	9"
6N 40+17	NEW HEADWALL @ KENNEDY	1	24	32	19"

NOTES:

1. GATE DIMENSIONS MAY VARY ALONG WITH REQUIRED LIFTING HARDWARE DUE TO WEIGHT LIMITATIONS. THE CONTRACTOR SHALL BE RESPONSIBLE FOR OBTAINING THE GATE DIMENSIONS AND ALL REQUIRED HARDWARE PRIOR TO WALL FORMING.
2. CONTRACTOR SHALL COORDINATE THE GATE STEM SLEEVE BOX OPENING WITH MANUFACTURERS DATA.
3. WALL THIMBLE SHALL BE PLACED IN FORM BEFORE CONCRETE IS CAST.
4. DIMENSIONS MAY VARY WITH MANUFACTURER OF GATES.
5. ENCLOSED GEAR LIFT UNIT IS AN ADDITIONAL EQUIPMENT TO BE INCORPORATED IN GATE FABRICATION FOR EASY OPERATION.
6. STEM GUIDE WILL BE REQUIRED TO MAINTAIN THE ALIGNMENT AND PREVENT BUCKLING OF THE STEM. STEM GUIDE MUST BE PLACED ON A CENTER TO CENTER DISTANCE THAT WILL LIMIT THE L/R RATIO OF THE STEM TO 200 OR LESS.
7. ALL DIMENSIONS IN SCHEDULES GIVEN IN INCHES.

US Army Corps of Engineers
Chicago District

SYMBOL	AMENDMENT DESCRIPTION	DATE APPROVED	SYMBOL	DESCRIPTION	DATE APPROVED

DESIGNED BY: JAG
DATE: AUG 2007
DRAWN BY: DB
SCALE: AS SHOWN
CHECKED BY: WK
SOLICITATION NUMBER: W912P6-07-B-0006
JOHN GROBOSKI
SUBMITTED BY:
DATE:

U.S. ARMY ENGINEER DISTRICT
CORPS OF ENGINEERS
CHICAGO, ILLINOIS

LITTLE CALUMET RIVER, INDIANA
LOCAL FLOOD PROTECTION
STAGE V, PHASE 2 - LEVEE

SLUICE AND FLAP GATE DETAILS

SHEET REFERENCE NUMBER:
M-01
SHEET 138 OF 138

PLOT DATE: 8/3/2007
FILENAME: D:\working\dms10534\1289W01.DGN