AMENDMENT OF SOLICITATION/MODIFICATION OF CONTRACT

1. CONTRACT ID CODE	PAGE OF PAGES	
J	1	103

2. AMENDMENT/MODIFICATION NO.	3. EFFECTIVE DATE	4. REQUISITION/PURCHASE REQ. NO.	5. PROJECT NO.(If applicable)
0001	29-Aug-2007	W81G6670749559	

6. ISSUED BY	CODE	7. ADMINISTERED BY (If other than item 6)	CODE
U. S. ARMY ENGINEER DISTRICT, CHICAGO 111 NORTH CANAL STREET SUITE 600 CHICAGO IL 60606-7206	W912P6	**See Item 6**	

8. NAME AND ADDRESS OF CONTRACTOR (No., Street, County, State and Zip Code)			
		X	9A. AMENDMENT OF SOLICITATION NO. W912P6-07-B-0006
		X	9B. DATED (SEE ITEM 11) 07-Aug-2007
			10A. MOD. OF CONTRACT/ORDER NO.
			10B. DATED (SEE ITEM 13)
CODE	FACILITY CODE		

11. THIS ITEM ONLY APPLIES TO AMENDMENTS OF SOLICITATIONS

[X] The above numbered solicitation is amended as set forth in Item 14. The hour and date specified for receipt of Offer [X] is extended, [ ] is not extended.

Offer must acknowledge receipt of this amendment prior to the hour and date specified in the solicitation or as amended by one of the following methods: (a) By completing Items 8 and 15, and returning 1 copies of the amendment; (b) By acknowledging receipt of this amendment on each copy of the offer submitted; or (c) By separate letter or telegram which includes a reference to the solicitation and amendment numbers. FAILURE OF YOUR ACKNOWLEDGMENT TO BE RECEIVED AT THE PLACE DESIGNATED FOR THE RECEIPT OF OFFERS PRIOR TO THE HOUR AND DATE SPECIFIED MAY RESULT IN REJECTION OF YOUR OFFER. If by virtue of this amendment you desire to change an offer already submitted, such change may be made by telegram or letter, provided each telegram or letter makes reference to the solicitation and this amendment, and is received prior to the opening hour and date specified.

12. ACCOUNTING AND APPROPRIATION DATA (If required)

13. THIS ITEM APPLIES ONLY TO MODIFICATIONS OF CONTRACTS/ORDERS.
IT MODIFIES THE CONTRACT/ORDER NO. AS DESCRIBED IN ITEM 14.

[ ] A. THIS CHANGE ORDER IS ISSUED PURSUANT TO: (Specify authority) THE CHANGES SET FORTH IN ITEM 14 ARE MADE IN THE CONTRACT ORDER NO. IN ITEM 10A.

[ ] B. THE ABOVE NUMBERED CONTRACT/ORDER IS MODIFIED TO REFLECT THE ADMINISTRATIVE CHANGES (such as changes in paying office, appropriation date, etc.) SET FORTH IN ITEM 14, PURSUANT TO THE AUTHORITY OF FAR 43.103(B).

[ ] C. THIS SUPPLEMENTAL AGREEMENT IS ENTERED INTO PURSUANT TO AUTHORITY OF:

[ ] D. OTHER (Specify type of modification and authority)

E. IMPORTANT: Contractor [ ] is not, [ ] is required to sign this document and return _____ copies to the issuing office.

14. DESCRIPTION OF AMENDMENT/MODIFICATION (Organized by UCF section headings, including solicitation/contract subject matter where feasible.)

SUBJECT: LITTLE CALUMET RIVER, INDIANA, LOCAL FLOOD PROTECTION, STAGE 5 PHASE 2, MUNSTER, HAMMOND, AND HIGHLAND, INDIANA

1. By way of this Amendment 0001, the Bid Opening Date is extended from 6 September 2007 to 12 September 2007. The Bid Opening time remains the same at 2:00 p.m. Chicago Local Time.

2. This Amendment incorporates the latest applicable wage rates for the subject Project. Accordingly, Modification Number 10 of General Decision Number IN070001, dated 8/17/2007 is attached hereto.

----THIE DESCRIPTION OF THIS AMENDMENT CONTINUES ON THE NEXT PAGE----

Except as provided herein, all terms and conditions of the document referenced in Item 9A or 10A, as heretofore changed, remains unchanged and in full force and effect.

15A. NAME AND TITLE OF SIGNER (Type or print)		16A. NAME AND TITLE OF CONTRACTING OFFICER (Type or print) TEL: EMAIL:	
15B. CONTRACTOR/OFFEROR (Signature of person authorized to sign)	15C. DATE SIGNED	16B. UNITED STATES OF AMERICA BY (Signature of Contracting Officer)	16C. DATE SIGNED 29-Aug-2007

SECTION SF 30 BLOCK 14 CONTINUATION PAGE

The following items are applicable to this Amendment:

IMPORTANT NOTES:

1. IN AN EFFORT TO AVOID FURTHER DELAYS OF THE BID OPENING, PLEASE PROVIDE ANY QUESTIONS REGARDING THE SOLICITATION PACKAGE AND THE CONTENTS THEREIN TO LINDA ZAMAROCY AT (312) 886-5475 NO LATER THAN THE CLOSE OF BUSINESS ON 31 AUGUST 2007. THIS IS A CRITICAL PROJECT FOR THE USACE AND ITS STAKEHOLDERS; THUS, IT IS IMPORTANT THAT THIS PROJECT BE AWARDED IN ACCORDANCE WITH THE USACE'S ACQUISITION PLAN.

2. Due to the new security safeguards implemented inside of the Facility housing the Chicago District Office, any bidder planning to hand-carry bids, must provide prior notice to the Contracting Office upon its arrival to the Chicago District. In that regard, any bidder intending to drop off/hand-carry bids to the Chicago District in response to this Solicitation, must contact one of the following individuals for the acceptance of their bid: Anita Simpkins at (312) 846-5372; Linda Zamarocy at (312) 846-5374; or Mike Jones at (312) 846-5373.

3. Bids for this Solicitation will be opened at 2:00p.m. Chicago Local Time on Wednesday, 12 September 2007. A USACE representative will be available in the Bid Opening Room, located in the Lobby Conference Room at 111 North Canal Street, Chicago, IL 60606, to accept bids delivered from 1:00 p.m. up to Bid Opening Time on 12 September 2007.

PART A – AMENDMENT TO THE SOLICITATION:

Bidders shall REMOVE Section 00010 (Bid Schedule) in its entirety and REPLACE it with the attached Revised Bid Schedule. **NOTE**:
Line items affected by this Amendment No. 0001 are annotated with an asterisk (*) above the changed/added line items (Refer to the following Item Numbers: 0001, 0006, 0008, 0009, 0010, 0010AD, 0010AE, 0010AF, 0010AG, 0010AH, 0011, 0013, 0014, 0015, 0016, 0016AB, 0016AC, 0017, 0017AA, 0018, 0018AA, 0018AC, 0018AD, 0019, 0019AD, 0020, 0020AD, 0021, 0021AA, 0021AD, 0021AE, 0021AF, 0022, 0023, 0023AA, 0023AG, 0024, 0025, 0026, 0027, 0028, 0029, 0030, 0033, 0034, 0034AH, 0035, 0035AG, 0038, 0038AC, 0039, 0039AC, 0040, 0040AC, 0040AF, 0041, 0041AC, 0042, 0042AD, 0043, and 0043AC).

PART B – AMENDMENT TO THE SPECIFICATIONS:

The following Sections of the Specifications have been amended by way of this Amendment 0002. Bidders shall REMOVE the Pages listed below and REPLACE with the respective Amended Pages, which are attached hereto.
The Amended sheet will show an underline for additions and stike through "---------" for deletions.

Section 01 10 00.00 03 General Provisions, Pages 3, 6 through 15.
Section 01 22 00.00 10 Measurement and Payment, Pages 9 through 22.
Section 01 45 04.00 03 Contractor Quality Control, Pages 8 through 11.
Section 01 52 02.00 10 Temporary Construction Facilities, Pages 1, 4 through 6.
Section 01 57 20.02 10 Environmental Protection for Indiana, Pages 10 through 12.
Section 31 00 00 Earthwork, Remove and Replace entire section.
Section 32 31 13 Chain Link Fences and Gates, Remove and Replace entire section.
Section 35 49 13.10 03 Metal Sheet Piling, Pages 5 through 7.

PART C – AMENDMENT TO THE PLANS:

Bidders shall **REMOVE** Sheet Reference No's C-09, C-10, C-11, C-13, C-16, C-18, C-22, C-23, C-25, C-26, C-46, C-48, C-49, C-50, C-53, C-54, C-56, S-01, S-02, S-04, S-05, S-06, S-07, S-08, S-09, S-10, S-11, S-12, S-13, S-14, S-16, S-7, S-18, S-19, S-20, S-23, S-24, S-25, S-26, S-28, S-29, S-30, S-31, S-32, S-33, S-34, S-35, S-36, S-37, S-38, S-39, S-40, S-41, S-42, S-43, S-44, S-45, S-46, S-109A, S-110, M-01 and **REPLACE** with the Respective Sheets attached hereto.

PART D –PRE-BID ATTENDANCE/MEETING NOTES:

PRE-BID MEETING was held at 10:30 a.m. on August 17, 2007 for Stage 5 Phase -2

Attendance: Imad Samara, Army Corps
John Groboski, Army Corps
Eric Sampson, Army Corps
Linda Zamarocy, Army Corps
Doug Anderson, Army Corps
Sheldon Edd, Army Corps
David Druzbicki, Army Corps
Kelsey Lavicka, Army Corps
Dick Albert, Army Corps

Jim Pokrajac, LCRBDC
Sandy Mordus, LCRBDC

Chris Bolek, T. J. Lambrecht (815-727-9211)
Jeff Eldridge, T. J. Lambrecht
Chris Naulty, T. J. Lambrecht
Jeff Webb, Dyer Construction (219-865-2961)
Steve Ahlersmeyer, HIS Constructors (317-541-9290)
Phil Ross, ICC (630-918-1242)
John Burt, Burt Inc.

Linda Zamarocy announced that Modification 03 to the FedBizoppsSynopsis was issued to notify prospective bidders that the FedTeds website is experiencing technical problems so downloading of the Plans and Specifications has not been possible. Prospective bidders should be able to download the solicitation package from the U.S. Army Corps of Engineers, Chicago District website. Modification 03 was posted August 7 with a direct link to the Solicitation on the Chicago Distrist website. Linda went through the solicitation package, announcing that all line items must be filled in. The government anticipates awarding a firm-fixed price, construction contract as a result of this Solicitation. The contract will contain base and optional items. The contract will be incrementally funded. There is a bid bond required with the submittal of your bids and should be in the amount of $3 million dollars or 20% of the bid price which ever is less. The bidder's are required to complete section 00600 Representations & Certifications and submit it along with all documents required by the Solicitation.

Imad Samara (Project Manager) added that all Federal regulations must be followed. This is the largest contract to be awarded on the Little Calumet River and the most complex. Federal participation is 75%; local sponsor participation is 25%. The project will be administered by the Army Corps Griffith office; Doug Anderson is head of that office. Project will include levees, floodwalls, sheet piling, bridges that connect recreational trails, coordination with railroads and utilities, and pipeline coordination. Safety is a major concern; all Corps safety requirements must be adhered to. There is a big concern with the problem of working so closely to home owners' property.

Jim Pokrajac added that a pre-construction meeting will be held after selection of a contractor to establish points of contact and discuss scheduling.

Burt Inc. asked if corrections being made now on the drawings. Many dimensions are missing making estimates very difficult. John Groboski and Eric Sampson asked if the contractors could reference the sheets with the deficiencies. Wrong pages are referenced. Burt was able to figure it out using his own CADD system, but the additions/corrections should be made. John Grobowski of The Army Corps is aware of the error in referencing and the errors will be corrected by way of an amendment.

All questions should be submitted separately and as soon as possible and amendments will be issued as soon as possible. Bid due date is now Friday, September 7. Only if major changes are made will the bid opening date be changed. It was discussed whether a second meeting was necessary; it was decided that it was not needed.

Jim Pokrajac asked if it was standard procedure for contractors to videotape residents' basements, or any other structures, near the areas where sheet piling is being driven for liability purposes prior to construction. The Army Corps agreed that it would probably be a wise thing to do. Several contractors indicated that they do this as standard procedure.

Linda Zamarocy distributed a contact information sheet, listing her email to send questions to and listing the Chicago District Website to download the Solicitation.

The Job site is accessible to all contractors to view the project area where construction will take place.

PART E – CONTRACTORS INQUIRES and USACE RESPONSES
(Submitted During the Period of August 20, 2007 to August 27, 2007)

Question 1. Division 35 of the Specifications does not allow vibratory hammers for driving any piling. Is it possible to reconsider the driving of sheet pile and allow vibratory hammers for sheet piles?

Response 1. Division 35 of the Contract Specifications is replaced in its entirety by way of this Amendment Number 0001. Specifically, Paragraph 3.2.2 of Specification Section 35 49 13.10 03, which previously prohibited the use of vibratory hammers, is now replaced as follows:

"Pilings shall be driven with the proper size hammer and by approved methods so as not to subject the pilings to damage. Vibratory driving of piles shall not be allowed in or within 50 feet of the Utility Corridor pipelines. Caution shall be taken in the sustained use of vibratory hammers when a hard driving condition is encountered to avoid interlock-melt or damages. The use of vibratory hammers should be discontinued AND impact hammers employed when the penetration rate due to vibratory loading is one foot or less per minute. Driving resistance in excess of 20 blows/in shall be considered practical refusal..."

Questions 2. Is the 37' of I-wall shown in sections XX & YY on S-105 to be included under pay items 38AB and 39AB or is it to be included in some other I-wall item and if they are what items are they to be included in?

Response 2. The I-wall shown in those particular Sections should be included under pay items 0038AB and 0039AB per Section 01 22 00.00 10 of the Specifications.

Question 3. Under pay item 16 there is a provision for the "temporary project safety fencing". As indicated in note 7 on sheet C-11 and other sheets it would appear that this would be required throughout the project – which could prove to be a rather costly item, and with no definite quantity listed. On the other sheets where there is mention of "temporary project safety fencing", a length is listed – please comment.

Response 3. The Measurement and Payment Section contains a description of this pay item. The drawings are to scale and can be measured. An approximate length was provided as an aid. All locations of temporary chain link fence are shown on the drawings.

Question 4. Under pay item 16 there is no provision for 8ft temporary chain link fence however the item is listed on sheets C-12, 18, 24, and 25 – please comment.

Response 4. SECTION 32 31 13 (*CHAIN LINK FENCES AND GATES)* of the Specifications have been revised by way of this Amendment 0001; a revised Section is attached hereto.

Question 5. Pay item 17 is identified with culvert structure 5-7C and the work for that culvert appears on sheet C-50. Pay item lists a trash rack and an end section however none appear on sheet C-50 – Please comment.

Response 5. The pay item description has been changed by this Amendment 0001, deleting the trash rack and end section. Refer to Drawing Sheet S-15 for end section details.

Question 6. Pay item 17AC flap gate does not appear on the list on M-01 – please comment.

Response 6. This Amendment includes a revised Drawing Sheet M-01; the flap gate now appears on the new sheet.

Question 7. Pay item 18 is for the Indianapolis pump station gate well however there are no pay items for sluice gates but there are three indicated on drawing S-43 and 44 and sheet M-01 has a 96' sluice gate listed for that structure. In addition there are pipe runs of 96" which do not appear in any pay item – please comment.

Response 7. The sluice and flap gates have been added to the Revised Drawing Sheet M-01, which is attached hereto. The Revised Bid Schedule enclosed herein provides two new bid items for the sluice and flap gates – See Items numbered as 0018AC & 0018AD.

Question 8. Pay item 20, Kennedy Ave Pump Station Outfall Modifications appears to have two sluice gates yet there is no pay item for them and the schedule on sheet M-01 indicates 2 – please comment.

Response 8. Item Number 0020 of the Bid Schedule is a parent line item associated with sub-items 0020AA through 0020AD; it is for informational purposes, not to be construed as a pay item – the correct title of the line item is "Kennedy Avenue

Gatewell." Bid Item 0020AB is for the sluice gates. On the Revised Drawing Sheet M-01, 54" flap gates have been added and will be paid for under the newly established Bid Item 0020AD – Refer to the Revised Bid Schedule contained herein.

Question 9. Pay item 21 Kennedy Pump Station Outfall Modifications is lacking any pay item for sluice gates or flap gates however drawing S29 & 31 indicates two sluice gates, (sizes?) in the gate well chamber and sheet C-48 indicates a sluice gate and a flap gate at the head wall structure (which are also noted on sheet M-01 – please comment.

Response 9. Item Number 0021 of the Bid Schedule is a parent line item associated with sub-items 0021AA through 0021AF; it is for informational purposes, not to be construed as a pay item. Drawing Sheets C-48 and M-01 have been modified by this Amendment 0001. On the Revised Bid Schedule, two new bid items have been added for the sluice gates and the flap gates – See Item Numbers 0021AD & 0021AE, respectively.

Question 10. Pay item 23AE is not quantified or listed in section 01 22 00.0 – is the new piece of 42"pipe to be included in this item? – please comment.

Response 10. Item 0023AE is listed under Specification Section 1.1.13 in 01 22 00.0 and is for the removal of the pipe and headwall. Installation of the new 42" pipe is covered under the newly established Bid Item 0023AG (42" RCP).

Question 11. Pay items 26 & 37 appear to have no provision for performance and payment bonds – please comment.

Response 11. Information regarding the exercising of option bid items are contained in the Bid Notes of the Bid Schedule. The bidder shall also refer to FAR Clause 52.228-15 (Performance and Payment Bonds) to obtain further information regarding the provisions for securing additional bonding.

Question 12. Under what pay item is the Indianapolis I-wall to be included as shown on sheets S-42, 43, & 45? – please comment.

Response 12. The title of 0018AA has been changed to Gatewell Structure and I-wall. The new I-wall will be included in this bid item. – See the Revised Bid Schedule included herein.

Question 13. Sheet C-11 a ditch, %S-D1 is noted on the plan from 4+73.42 to 9+73.13 yet none is shown on the cross sections on sheet C-26, further investigation indicates that none of the ditches listed on the plan sheets are indicated in the cross sections – please comment. Also the elevation of the bottom & top of the sheet pile wall shown on this sheet, (585 & 604) does not agree with the elevation shown on sheet S-01 (568 & 602.1) – are the elevations shown on the S sheets correct and can these be used over the C sheets? – please comment.

Response 13. The ditch widths, side slopes, inverts, beginning and ending locations are identified on the drawings. Generally speaking, the ditches are shown in cross section with the exception of 5S-D1, its 3ft wide and has minor excavation. This ditch was projected to the profile.

Top of wall shown in the profile on the Revised Drawing Sheet C-11, which was amended to match structural sheets - the revised Drawing Sheet is attached hereto. Structural sheets should be used for all elevations.

Question 14. Sheet C-18 note 9 indicates that equipment and material cannot be stored for more than 24 hours without approval from contracting officer – will approval be granted as if the contractor has to be out after every day there will be a large expense involved. Not 5 says to see sheet S13 for I wall details yet the details disagree with sheet S-23 where the North Drive Wall is indicated. Also the elevations and profile does not agree with sheet S-23 – please comment.

Response 14. A station range was provided with the note. The intent is not store equipment and material behind resident's homes. The contracting officer will make the determination, as what is acceptable. It is suggested that you coordinate, what you plan on the site overnight.

The wrong sheet reference was provided. As you noted, it is S-23.

The structural sheets are drawn with a smaller scale to show the details and elevations. Rather than trying to scale the exact elevation off of the profiles provided in the civil sheets, it is recommended that the elevations be taken from the structural sheets. The civil profile has been updated by this Amendment 0001.

Question 15. Sheet C-26 at cross sections 5S 7+00, & 9+00 wick drains are indicated but there is no pay item for wick drains in that area nor are there any drains indicated on sheet C-43 – please comment.

Response 15. It was incorrectly labeled; it should be French drain as indicated on the Revised and attached Drawing Sheet C-11, which has the location and typical section detailed.

Question 16. Sheet C-46 in the plan view for Culvert 6-5C indicates a precast manhole but the cross section view indicates a gate well – please comment.

Response 16. It was incorrectly labeled in the cross section. It is a 24" manhole, which has been corrected by way of the Revised Drawing Sheet C-46, which is attached hereto.

Question 17. Sheet C-48 at location F5 indicates a gate well and a sluice gate for culvert 6-8C yet there are no pay items for this work.

Response 17. The Bidder shall refer to Response 8.

Question 18. Sheet S-04 at location F4 there is a note to install a flexible check valve at the end of a pipe. What pay item should include this item and what are the specifications for this valve?

Response 18. The valve shall be included in the pay item for the Hart Ditch I-Wall. The following Specification Note has been added to the Revised and attached Drawing Sheet S-04 as follows:

> *3. CHECK VALVES SHALL BE ALL RUBBER OF THE FLOW OPERATED CHECK TYPE WITH A SLIP-ON CONNECTION. THE FURNISHED CHECK VALVE SHALL BE DESIGNED TO SLIP OVER THE PIPE'S OUTSIDE DIAMETER AND ATTACHED BY MEANS OF A VALVE MANUFACTURER'S FURNISHED STAINLESS STEEL CLAMP. THE PORT AREA SHALL CONTOUR DOWN TO A DUCKBILL, WHICH SHALL ALLOW PASSAGE OF FLOW IN ONE DIRECTION WHILE PREVENTING REVERSE FLOW. THE DUCKBILL SHALL BE OFFSET SO THAT THE BOTTOM LINE OF THE VALVE IS FLAT, KEEPING THE INVER OF THE PIPE PARALLEL WITH THE INVERT OF THE VALVE. THE VALVE SHALL BE INSTALLED IN ACCORDANCE WITH MANUFACTURER'S RECOMMENDATIONS.*

Question 19. Sheet S-05 at location E6 & H6 a ladder is shown, what pay item is this included in and there are no details of this ladder.

Response 19. The valve shall be included in the pay item for the Hart Ditch I-Wall. Nominal dimensions added to Sheet S-05. Also, the following Specification Note has been added to the Revised and attached Drawing Sheet S-04 as follows:

> *4. THE PASS THROUGH LADDER SHALL BE COMMERCIALLY MANUFACTURED OF FIBERGLASS REINFORCED PLASTIC (FRP) WITH FIXED RAILS AND A FRP GRATE PASS THROUGH LANDING. THE LADDER SHALL HAVE THE NOMINAL DIMENSIONS AS SHOWN ON SHEET S-05. THE LADDER SHALL BE INSTALLED IN ACCORDANCE WITH MANUFACTURER'S RECOMMENDATIONS.*

Question 20. Sheet S-06 at location E3 the dimension on the left side of section C/S5/S6 appears to be 13'6" not 9'-0' – please comment.

Response 20. The correct dimension is 13'-6" as shown on the Revised and attached Drawing Sheet S-06.

Question 21. Sheet S-12 Section C/S2/S12 the dimension on the right (13'-5") agrees with the elevations shown but the dimensions on the left add up to 13'-9", please comment.

Response 21. The correct dimension is 13'-5". The 1'-2" dimension shown in G5 should be 10". With this correction the dimensions of the left add up to the dimension

on the right. The dimensions have been corrected by way of the Revised and attached Drawing Sheet S-12.

Question 22. Sheet S-14 the turn around retaining wall profile does not agree with that shown on sheet C-18. The typical sheet pile wall section is for PZ27 – it would seem that another steel channel cap should be specified for the PZ22, (C12X25) – please comment.

Response 22. a. The turn around shown of Drawing Sheet C-18 does not have a retaining wall associated with it. The wall shown on Drawing Sheet C-18 is the Southwest Utility I-Wall. The turn around retaining wall shown on Drawing Sheet S-14 holds back the toe of the turn around shown on Drawing Sheet C-23… no wall profile is provided on Drawing Sheet C-23 since it is not part of the line of protection and it is shown on Drawing Sheet S-14.

b. There are no PZ22 Sheet Pile walls in this job only PZ27.

Question 23. Sheet S-18 has a dimension missing from the northeast elevation at the right side – please furnish it.

Response 23. The dimension is 17'-10"± and the respective sheet has been updated by way of this Amendment 0001.

Question 24. Sheet S-20 at location H2 there is an indication that the wall continues but there is no match line shown – what is the east end of this I wall?

Response 24. This wall continues as the North Drive I-Wall and it matches with Drawing Sheet S-23 – revisions have been made by way of this Amendment 0001.

Question 25. Sheet S-23 at location A5 a match is indicated with Sheet S-15 however there is no match on S-15. There appears to be a missing section of I wall to conform to C-18 – please comment.

Response 25. This wall matches with Drawing Sheet S-20. Refer to Response 23.

Question 26. Sheet S-32 – the dimension for the bottom of the parapet is missing on section B – please comment.

Response 26. The dimension is 1'-9," which has been corrected by way of this Amendment 0001.

Question 27. Sheet S-109A indicates a segmental block wall in detail A in the bottom left corner, (42' – 11' and 33'-4") however it doesn't indicate how high it is. – the height is required to calculate the cost of this wall – please comment. Also is it possible to get an elevation of the sheeting indicated at location F3 which we believe to be pay item

25AB, so that we know if there are any caps or sloped piles or anything incidental – please comment.

Response 27. The West of Kennedy Ave. plan view (S-109A) should reference S-109B View A. This elevation view shows the exposed height and provides wall details.

In S-109A Detail B, the top of wall elevation is stated for the wall parallel to the levee. (F2) The wing walls slope up to the top of the levee and also state "PZC 18 TYP. Length = 28'" This is bid item 0013AD. A Revised Drawing Sheet S-109A is incorporated by way of this Amendment 0001.

Question 28. Sheets S-111, S112 & S113 indicate sheeting to be driven under and around the pier footings however the foot print of the sheeting is smaller than the size of each footing can you explain what is actually desired?

Response 28. Piling information is shown on Drawing Sheets S-112 and S-113. Concrete and concrete reinforcement are on Drawing Sheet S-111. H-piles shall be driven for the pile foundation for the piers. Sheet piling shall be driven around the perimeter for scour protection and to serve as concrete formwork or as a retaining wall for construction access. Since the concrete has an irregular shape, the sheet piling centerline line is shown for quantity estimating purposes.

Question 29. Sheet M-01 has a sluice gate and a flap gate listed at station 6N 27+78 yet there is no drainage structure at that location – please comment.

Response 29. The respective Sheet was updated with the correct schedule by way of this Amendment 0001.

Question 30. Sheet e-16 at location F5 there is a note indicating a 24" RCP w/flared end sections on both ends-there is no length for the 24"pipe and there is no pay item for this work.

Response 30. The 24" RCP and end sections will be paid for under new bid item 0010AH. A Revised Bid Schedule is included in this Amendment 0001.

Question 31. Sheet c-19 what is the intent or meaning of note 3 - there do not appear to be any closure structures on this drawing?

Response 31. Note 3 is a Sheet Reference. It references Drawing Sheets S-33 to S-35; these particular Sheets were amended by way of this Amendment 0001. The Hart Ditch Control Structure is around Drawing Sheet C-3 and is also labeled in both the plan and profile view.

Question 32. Sheet c-22 at location C4 there is a note about a 24-pipe and end section -how long is the pipe, does it get connected to an existing 48" pipe, and what pay item is

it to be included in? Also at location F6 there is a note about a 1500 sf gravel pad -what pay item is that to be included in?

Response 32. a. The Bidder shall refer to Specification Section 1.2.6 GRADED CRUSHED AGGREGATE, CA-53 and Bid Item 0010AC. The payment information is as follows:

> *1.2.6.1 Payment*
>
> *Payment will be made at the contract unit price for graded crushed aggregate, CA-53 as described in SECTION 32 11 23.00 GRADED CRUSHED AGGREGATE BASE COURSE. This includes the aggregate used for all levee turnaround areas and gravel pad shown adjacent to 6N - 96" Gatewell.*

b. The new 24” RCP will be tied into the existing 48”. The 24” RCP, end section and grating will be paid for under new Bid Item 0019AD, which is included in the Revised Bid Schedule contained herein.

Question 33. Sheet S-36 at location H2 indicates a match with sheet S-26-26 however there is no match on that sheet. Sheet S-39 appears to have something to do with sheet S-36 however there are no indications of a match. Is it possible to better indicate What is happening on the work. that is not shown on the eastern end of the I~wall?

Response 33. Drawing Sheet S-35 matches with Drawing Sheet S-37 so that the Note at H2 matches Drawing Sheet S-37 and on the Drawing Sheet S-37 the location A2, the note should match Drawing Sheet S-36.

Question 34. Sheet C-25 at location D6 indicates two flared end sections for pay item 20, (Kennedy Avenue Gatewell), however there is no pay Item for these end sections.

Response 34. These items are included in pay item 0020AC of the Bid Schedule.

Question 35. Under pay item 10 there should be a provision for signs however there is not. What pay item are the signs as shown and listed on sheet R-08 to be included?

Response 35. Pay item 0010AG was added for signs by way of the Revised Bid Schedule included hereunder.

Question 36. Pay item 14AC specifies gabion mattresses-what size, (i.e. thickness) mattress is desired and is the wire to be galvanized, pvc coated,or Plain?

Response 36. The thickness is shown on Drawing Sheet C-54 and the technical requirements are contained in Specification SECTION 313600, “WIRE MESH GABION MATTRESSES”. The contractor shall use the type of wire recommended by the manufacturer of the mattresses.

Question 37. Sheets S-109A andS-109B indicate piles for the abutment for the bridge East of Kennedy Ave. however sheet S-110 at location E1 indicates that they are not required for that bridge abutment however there is a pay item 35AF for these piles - please comment. Also the lengths for the piles In the abutments are not listed but the abutment plan for the East of Kennedy Ave indicates 4 piles in each abutment –based on the quantity of pay item 35AF that would indicate 130' piles, which seem rather long - please comment..

Response 37. The two battered piles in that typical view are not required as noted. Therefore they are not shown on Drawing Sheet S-109A. The four piles shown on the Revised and attached Drawing Sheet S-109A are required. Additional piling is required for the two piers. See Drawing Sheet S-112 for additional pile information.

Question 38. Sheet S-109B indicates aggregate fill around each bridge abutment. Is that work to be included in the abutment or will there be a separate item for this work?

Response 38. Per the provisions expressed throughout the Contract Set (Specifications & Drawings), it should be included in the abutment.

Question 39. Sheets S-111, S-112, and S-113 have sheeting requirements. Does this sheeting require interlock sealing?

Response 39. No, interlock sealing is not required for the pier foundations or the piling in detail B of the Revised and attached Drawing Sheet S-109A.

Question 40. There do not seem to be any drawings which locate or show a cross section of Culvert 6-NC, pay item 40AC, therefore it is not possible to know all of the work involved for that item – please comment.

Response 40. This structure is part of the utility corridor I-wall. The title of Bid Item 0040AC has been amended by way of this Amendment 0001 to read as 24" Closure Structure." The Bidder shall refer to the Revised Bid Schedule included hereunder.

Question 41. Is the concrete I wall near Baring Ave Outfall structure to be included in item 23AA – Please comment.

Response 41. Yes; the Bidder shall refer to the respective Bid Item.

Question 42. What pay item does the work shown on sheet C-53 come under? Also the extent of the work cannot be determined from the drawing as the length is not listed. Also, if this road is to be used as an access road or haul road there will need to be some type of surface provided. There should be some earthwork quantity. Finally will the work as shown have to be moved upon completion of the work? What does the last sentence of note 3 mean? – please comment.

Response 42. As with any temporary access roads the contractor will determine what is necessary for them to complete the work. If the contractor determines that they want to use this area for access, this is what would be required to work near the pipelines. There is no pay item for this work. Per Note 3, the area must be restored to the preconstruction condition which includes removal. The last sentence of Note 3 has been revised by way of Sheet Reference No. C-53 (The Revised Sheet is attached hereto).

Question 43. Most of the I wall plans shown on the S sheets lack stationing, it appears that only S-04, S-05, and S-06 have some indication of stationing. Would it be possible that this information could be added to drawings either by reissuing the drawings or by a printed list to determine where the walls start and end?

Response 43. The Contractor shall use the Centerline Coordinates and the Stationing shown on the Work Limits and Control Data sheets, and the Plan and Profile sheets to determine where the walls start and end. Also use these sheets to determine wall bend locations and angles. Please note that the stations called out on Drawing Sheets S-04 and S-05 are indicated as approximate. An approximate station on the Structural Elevations of I-Walls is occasionally shown on longer walls to give a general location of wall bends and other features and to help orientate the wall to the civil sheets. The stationing shown on the Structural sheets shall not be used to layout the wall.

Question 44. Many of the sections on the drawings are mislabeled – would it be possible that someone could search through the plans and make the proper corrections? For an example on Sheet S-1 sections A and B indicate that the section shows up on sheet S-07 but it does not, on sheet S-20 sections D & F do not exist on either sheet S-20 or S-14, on what sheet S-36 sections labeled D and C do not show up on Sheet S-27 – this is only a partial list – much time is lost searching for the correct section and then it might not be correct.

Response 44. The sectioning has been updated and corrected by way of this Amendment 0001. The Bidder shall refer to the applicable Revised Drawing Sheets attached hereto.

Question 45. The sheeting profile shown on the structural sheets, (S), in many cases does not conform to the sheeting profile shown on the plan and profile sheets, (C), can we use the structural sheets to determine the desired sheeting lengths and the number of pieces of each length? – please comment.

Response 45. Bidders are required to bid on the quantities stated in the Bid Schedule.

Question 46. Sheet S-19 shows a match line at location F2, it says S-15 but it appears to be S-20 – vice versa for sheet 20, also on sheet S-20 at location H2 there should be a match line which looks like it should be S-23 – please comment.

<u>Response 46</u>. Drawing Sheets S-19, S-20 & S-23 have been corrected by way of this Amendment 0001; the Revised Sheets are attached hereto.

REVISED BID SCHEDULE
(AMENDMENT NO. 0001)

*

ITEM NO	SUPPLIES/SERVICES	QUANTITY	UNIT	UNIT PRICE	AMOUNT
0001		1	Lump Sum		
	MOBILIZATION AND DEMOBILIZATION **Firm-Fixed Price (FFP)** PURCHASE REQUEST NUMBER: W81G6670749559				
				NET AMT	

ITEM NO	SUPPLIES/SERVICES	QUANTITY	UNIT	UNIT PRICE	AMOUNT
0002		1	Lump Sum		
	TEMPORARY CONSTRUCTION FACILITIES FFP				
				NET AMT	

ITEM NO	SUPPLIES/SERVICES	QUANTITY	UNIT	UNIT PRICE	AMOUNT
0003		1	Lump Sum		
	MAINTENANCE OF TRAFFIC FFP				
				NET AMT	

ITEM NO	SUPPLIES/SERVICES	QUANTITY	UNIT	UNIT PRICE	AMOUNT
0004		1	Lump Sum		
	CLEARING AND GRUBBING FFP				
				NET AMT	

ITEM NO	SUPPLIES/SERVICES	QUANTITY	UNIT	UNIT PRICE	AMOUNT
0005		1	Lump Sum		
	DEMOLITION AND REMOVAL FFP				
				NET AMT	

*

ITEM NO	SUPPLIES/SERVICES
0006	
	RIPRAP CLASS 2 GRADATION **(NORTH BANK AT HART DITCH)** THIS IS A PARENT LINE ITEM; THEREFORE, THE BIDDER SHALL SET FORTH ITS PRICING AT THE ASSOCIATED SUB-ITEMS FOR THIS ITEM; REFER TO SUB-ITEMS 0006AA THROUGH 0006AC.

ITEM NO	SUPPLIES/SERVICES	QUANTITY	UNIT	UNIT PRICE	AMOUNT
0006AA	**RIPRAP** FFP	4,300	Net Ton (2,000 LB)		
				NET AMT	

ITEM NO	SUPPLIES/SERVICES	QUANTITY	UNIT	UNIT PRICE	AMOUNT
0006AB	**BEDDING STONE** FFP	2,130	Net Ton (2,000 LB)		
				NET AMT	

ITEM NO	SUPPLIES/SERVICES	QUANTITY	UNIT	UNIT PRICE	AMOUNT
0006AC	**SAND** FFP	710	Net Ton (2,000 LB)		
				NET AMT	

ITEM NO	SUPPLIES/SERVICES	QUANTITY	UNIT	UNIT PRICE	AMOUNT
0007		360	Linear Foot		
	FRENCH DRAINS FFP				
				NET AMT	

*

ITEM NO	SUPPLIES/SERVICES
0008	**EARTHWORK** THIS IS A PARENT LINE ITEM; THEREFORE, THE BIDDER SHALL SET FORTH ITS PRICING AT THE ASSOCIATED SUB-ITEMS FOR THIS ITEM; REFER TO SUB-ITEMS 0008AA THROUGH 0008AE.

ITEM NO	SUPPLIES/SERVICES	QUANTITY	UNIT	UNIT PRICE	AMOUNT
0008AA		32,605	Cubic Yard		
	STRIPPING TOPSOIL FFP				
				NET AMT	

ITEM NO	SUPPLIES/SERVICES	QUANTITY	UNIT	UNIT PRICE	AMOUNT
0008AB		116,000	Cubic Yard		
	IMPERVIOUS FILL FFP				
				NET AMT	

ITEM NO	SUPPLIES/SERVICES	QUANTITY	UNIT	UNIT PRICE	AMOUNT
0008AC		2,800	Cubic Yard		
	SATISFACTORY FILL FFP				
				NET AMT	

ITEM NO	SUPPLIES/SERVICES	QUANTITY	UNIT	UNIT PRICE	AMOUNT
0008AD		2,450	Cubic Yard		
	DITCH EXCAVATION (6N-D3 AND 5S-D2 ONLY. OTHER DITCHES ARE INCIDENTAL) FFP				
				NET AMT	

ITEM NO	SUPPLIES/SERVICES	QUANTITY	UNIT	UNIT PRICE	AMOUNT
0008AE		23,500	Cubic Yard		
	SPOIL BANK EXCAVATION FFP				
				NET AMT	

*

ITEM NO	SUPPLIES/SERVICES
0009	**LANDSCAPING** THIS IS A PARENT LINE ITEM; THEREFORE, THE BIDDER SHALL SET FORTH ITS PRICING AT THE ASSOCIATED SUB-ITEMS FOR THIS ITEM; REFER TO SUB-ITEMS 0009AA THROUGH 0009AB.

ITEM NO	SUPPLIES/SERVICES	QUANTITY	UNIT	UNIT PRICE	AMOUNT
0009AA		57	Acre		
	SEEDING FFP				
				NET AMT	

ITEM NO	SUPPLIES/SERVICES	QUANTITY	UNIT	UNIT PRICE	AMOUNT
0009AB		12,200	Cubic Yard		
	TOPSOIL FFP				
				NET AMT	

*

ITEM NO	SUPPLIES/SERVICES
0010	**RECREATION TRAIL AND RAMPS** THIS IS A PARENT LINE ITEM; THEREFORE, THE BIDDER SHALL SET FORTH ITS PRICING AT THE ASSOCIATED SUB-ITEMS FOR THIS ITEM; REFER TO SUB-ITEMS 0010AA THROUGH 0010AH.

ITEM NO	SUPPLIES/SERVICES	QUANTITY	UNIT	UNIT PRICE	AMOUNT
0010AA		380	Net Ton (2,000 LB)		
	BITUMINOUS SURFACE AND BINDER COURSE FFP				
				NET AMT	

ITEM NO	SUPPLIES/SERVICES	QUANTITY	UNIT	UNIT PRICE	AMOUNT
0010AB		1,050	Cubic Yard		
	LIMESTONE SCREENINGS FFP				
				NET AMT	

ITEM NO	SUPPLIES/SERVICES	QUANTITY	UNIT	UNIT PRICE	AMOUNT
0010AC		1,800	Cubic Yard		
	CRUSH AGGREGATE, CA-53 FFP				
				NET AMT	

*

ITEM NO	SUPPLIES/SERVICES	QUANTITY	UNIT	UNIT PRICE	AMOUNT
0010AD		4	Each		
	VEHICLE BARRIER, TYPE 1 **(SET - TWO FIXED AND ONE REMOVABLE BOLLARDS)** FFP				
				NET AMT	

*

ITEM NO	SUPPLIES/SERVICES	QUANTITY	UNIT	UNIT PRICE	AMOUNT
0010AE		20	Each		
	VEHICLE BARRIER, TYPE II (FIXED BOLLARDS) FFP				
				NET AMT	

*

ITEM NO	SUPPLIES/SERVICES	QUANTITY	UNIT	UNIT PRICE	AMOUNT
0010AF		7	Each		
	A-FRAME GATES FFP				
				NET AMT	

*

ITEM NO	SUPPLIES/SERVICES	QUANTITY	UNIT	UNIT PRICE	AMOUNT
0010AG		1	Lump Sum		
	RECREATION TRAIL SIGNAGE FFP				
				NET AMT	

*

ITEM NO	SUPPLIES/SERVICES	QUANTITY	UNIT	UNIT PRICE	AMOUNT
0010AH		1	Lump Sum		
	24” RCP AND END SECTIONS (RAMP 5-SE PARKWAY) FFP				
				NET AMT	

*

ITEM NO	SUPPLIES/SERVICES
0011	
	RELOCATE PARKWAY DRIVE THIS IS A PARENT LINE ITEM; THEREFORE, THE BIDDER SHALL SET FORTH ITS PRICING AT THE ASSOCIATED SUB-ITEMS FOR THIS ITEM; REFER TO SUB-ITEMS 0011AA THROUGH 0011AB.

ITEM NO	SUPPLIES/SERVICES	QUANTITY	UNIT	UNIT PRICE	AMOUNT
0011AA		5,025	Square Foot		
	6" PCC BASE COURSE FFP				
				NET AMT	

ITEM NO	SUPPLIES/SERVICES	QUANTITY	UNIT	UNIT PRICE	AMOUNT
0011AB		475	Net Ton (2,000 LB)		
	BITUMINOUS SURFACE FFP				
				NET AMT	

ITEM NO	SUPPLIES/SERVICES	QUANTITY	UNIT	UNIT PRICE	AMOUNT
0012		350	Cubic Yard		
	REMOVAL OF UNSUITABLE MATERIAL FFP				
				NET AMT	

*

ITEM NO	SUPPLIES/SERVICES
0013	**PEDESTRIAN BRIDGE WEST OF INDIANAPOLIS BOULEVARD** THIS IS A PARENT LINE ITEM; THEREFORE, THE BIDDER SHALL SET FORTH ITS PRICING AT THE ASSOCIATED SUB-ITEMS FOR THIS ITEM; REFER TO SUB-ITEMS 0013AA THROUGH 0013AE.

ITEM NO	SUPPLIES/SERVICES	QUANTITY	UNIT	UNIT PRICE	AMOUNT
0013AA		2	Each		
	CONCRETE ABUTMENTS FFP				
				NET AMT	

ITEM NO	SUPPLIES/SERVICES	QUANTITY	UNIT	UNIT PRICE	AMOUNT
0013AB		1	Lump Sum		
	PRE-FABRICATED PEDESTRIAN BRIDGE FFP				
				NET AMT	

ITEM NO	SUPPLIES/SERVICES	QUANTITY	UNIT	UNIT PRICE	AMOUNT
0013AC		2	Each		
	BOLLARDS WITH SLEEVES AND HARDWARE FFP				
				NET AMT	

ITEM NO	SUPPLIES/SERVICES	QUANTITY	UNIT	UNIT PRICE	AMOUNT
0013AD		2,217	Square Foot		
	PZC18 SHEET PILING FFP				
				NET AMT	

ITEM NO	SUPPLIES/SERVICES	QUANTITY	UNIT	UNIT PRICE	AMOUNT
0013AE		480	Linear Foot		
	HP 12X63 PILE FFP				
				NET AMT	

*

ITEM NO	SUPPLIES/SERVICES
0014	
	HART DITCH CONTROL STRUCTURE
	THIS IS A PARENT LINE ITEM; THEREFORE, THE BIDDER SHALL SET FORTH ITS PRICING AT THE ASSOCIATED SUB-ITEMS FOR THIS ITEM; REFER TO SUB-ITEMS 0014AA THROUGH 0014AD.

ITEM NO	SUPPLIES/SERVICES	QUANTITY	UNIT	UNIT PRICE	AMOUNT
0014AA		869	Net Ton (2,000 LB)		
	RIPRAP CLASS 2 GRADATION FFP				
				NET AMT	

ITEM NO	SUPPLIES/SERVICES	QUANTITY	UNIT	UNIT PRICE	AMOUNT
0014AB		1,142	Net Ton (2,000 LB)		
	RIPRAP REVETMENT GRADATION FFP				
				NET AMT	

ITEM NO	SUPPLIES/SERVICES	QUANTITY	UNIT	UNIT PRICE	AMOUNT
0014AC		144	Cubic Yard		
	GABION MATTRESS FFP				
				NET AMT	

ITEM NO	SUPPLIES/SERVICES	QUANTITY	UNIT	UNIT PRICE	AMOUNT
0014AD		1	Lump Sum		
	CONTROL STRUCTURE FFP				
				NET AMT	

*

ITEM NO	SUPPLIES/SERVICES
0015	
	HART DITCH I-WALL
	THIS IS A PARENT LINE ITEM; THEREFORE, THE BIDDER SHALL SET FORTH ITS PRICING AT THE ASSOCIATED SUB-ITEMS FOR THIS ITEM; REFER TO SUB-ITEMS 0015AA THROUGH 0015AB.

ITEM NO	SUPPLIES/SERVICES	QUANTITY	UNIT	UNIT PRICE	AMOUNT
0015AA		1	Lump Sum		
	CONCRETE FFP				
				NET AMT	

ITEM NO	SUPPLIES/SERVICES	QUANTITY	UNIT	UNIT PRICE	AMOUNT
0015AB		20,700	Square Foot		
	STEEL SHEET PILING, PZ-22 FFP				
				NET AMT	

*

ITEM NO	SUPPLIES/SERVICES
0016	
	FENCING THIS IS A PARENT LINE ITEM; THEREFORE, THE BIDDER SHALL SET FORTH ITS PRICING AT THE ASSOCIATED SUB-ITEMS FOR THIS ITEM; REFER TO SUB-ITEMS 0016AA THROUGH 0016AD.

ITEM NO	SUPPLIES/SERVICES	QUANTITY	UNIT	UNIT PRICE	AMOUNT
0016AA		3,385	Linear Foot		
	FENCE REMOVAL FFP				
				NET AMT	

*

ITEM NO	SUPPLIES/SERVICES	QUANTITY	UNIT	UNIT PRICE	AMOUNT
0016AB		789	Linear Foot		
	PERMANENT CHAIN LINK FENCE WITH BARBWIRE AND GATE, 5' FFP				

*

ITEM NO	SUPPLIES/SERVICES	QUANTITY	UNIT	UNIT PRICE	AMOUNT
0016AC		3,525	Linear Foot		
	PERMANENT CHAIN LINK FENCE AND GATES 8' FFP				

NET AMT

ITEM NO	SUPPLIES/SERVICES	QUANTITY	UNIT	UNIT PRICE	AMOUNT
0016AD		1	Lump Sum		
	TEMPORARY SECURITY FENCE & GATES FFP				

NET AMT

*

ITEM NO	SUPPLIES/SERVICES
0017	

CULVERT STRUCTURES 5-7C

THIS IS A PARENT LINE ITEM; THEREFORE, THE BIDDER SHALL SET FORTH ITS PRICING AT THE ASSOCIATED SUB-ITEMS FOR THIS ITEM; REFER TO SUB-ITEMS 0017AA THROUGH 0017AD.

*

ITEM NO	SUPPLIES/SERVICES	QUANTITY	UNIT	UNIT PRICE	AMOUNT
0017AA		1	Lump Sum		
	1-24" RCP CULVERT PIPE, 18" RCP CULVERT PIPE, AND 4 PRECAST MANHOLES FFP				
				NET AMT	

ITEM NO	SUPPLIES/SERVICES	QUANTITY	UNIT	UNIT PRICE	AMOUNT
0017AB		1	Lump Sum		
	HEADWALL FFP				
				NET AMT	

ITEM NO	SUPPLIES/SERVICES	QUANTITY	UNIT	UNIT PRICE	AMOUNT
0017AC		1	Lump Sum		
	1- 24" x 24" FLAP GATE FFP				
				NET AMT	

ITEM NO	SUPPLIES/SERVICES	QUANTITY	UNIT	UNIT PRICE	AMOUNT
0017AD		1	Lump Sum		
	RIPRAP REVETMENT GRADATION FFP				
				NET AMT	

*

ITEM NO	SUPPLIES/SERVICES
0018	
	INDIANAPOLIS PUMP STATION GATEWELL
	THIS IS A PARENT LINE ITEM; THEREFORE, THE BIDDER SHALL SET FORTH ITS PRICING AT THE ASSOCIATED SUB-ITEMS FOR THIS ITEM; REFER TO SUB-ITEMS 0018AA THROUGH 0018AD.

*

ITEM NO	SUPPLIES/SERVICES	QUANTITY	UNIT	UNIT PRICE	AMOUNT
0018AA		1	Lump Sum		
	GATEWELL STRUCTURE AND I-WALL FFP				
				NET AMT	

ITEM NO	SUPPLIES/SERVICES	QUANTITY	UNIT	UNIT PRICE	AMOUNT
0018AB		7,400	Square Foot		
	STEEL SHEET PILING, PZ-27 FFP				
				NET AMT	

*

ITEM NO	SUPPLIES/SERVICES	QUANTITY	UNIT	UNIT PRICE	AMOUNT
0018AC		1	Lump Sum		
	3-60”X60” SLUICE GATES AND EQUIPMENT FFP				
				NET AMT	

*

ITEM NO	SUPPLIES/SERVICES	QUANTITY	UNIT	UNIT PRICE	AMOUNT
0018AD		1	Lump Sum		
	3-60”X60” FLAP GATES AND EQUIPMENT FFP				

NET AMT

*

ITEM NO	SUPPLIES/SERVICES
0019	
	INDIANAPOLIS BOULEVARD CULVERT STRUCTURES THIS IS A PARENT LINE ITEM; THEREFORE, THE BIDDER SHALL SET FORTH ITS PRICING AT THE ASSOCIATED SUB-ITEMS FOR THIS ITEM; REFER TO SUB-ITEMS 0019AA THROUGH 0019AD.

ITEM NO	SUPPLIES/SERVICES	QUANTITY	UNIT	UNIT PRICE	AMOUNT
0019AA		1	Lump Sum		
	2-18" RCP CULVERT PIPES, 2 MANHOLES AND CONCRETE COLLARS FFP				

NET AMT

ITEM NO	SUPPLIES/SERVICES	QUANTITY	UNIT	UNIT PRICE	AMOUNT
0019AB		1	Lump Sum		
	REMOVE EXISTING STORM SEWER (WEST OF INDIANAPOLIS BOULEVARD) FFP				
				NET AMT	

ITEM NO	SUPPLIES/SERVICES	QUANTITY	UNIT	UNIT PRICE	AMOUNT
0019AC		1	Lump Sum		
	REMOVE SEDIMENT, GRADING AND PLACEMENT OF RIPRAP (EAST OF INDIANAPOLIS BOULEVARD) FFP				
				NET AMT	

*

ITEM NO	SUPPLIES/SERVICES	QUANTITY	UNIT	UNIT PRICE	AMOUNT
0019AD		1	Lump Sum		
	1-24" RCP CULVERT PIPE, END SECTION, AND TRASHRACK FFP				
				NET AMT	

*

ITEM NO	SUPPLIES/SERVICES
0020	

KENNEDY AVENUE GATEWELL (DOUBLE 54" S/6-8C)

THIS IS A PARENT LINE ITEM; THEREFORE, THE BIDDER SHALL SET FORTH ITS PRICING AT THE ASSOCIATED SUB-ITEMS FOR THIS ITEM; REFER TO SUB-ITEMS 0020AA THROUGH 0020AD.

ITEM NO	SUPPLIES/SERVICES	QUANTITY	UNIT	UNIT PRICE	AMOUNT
0020AA		1	Lump Sum		
	GATEWELL STRUCTURE FFP				
				NET AMT	

ITEM NO	SUPPLIES/SERVICES	QUANTITY	UNIT	UNIT PRICE	AMOUNT
0020AB		1	Lump Sum		
	2 - 54"X54" SLUICE GATES AND EQUIPMENT FFP				
				NET AMT	

ITEM NO	SUPPLIES/SERVICES	QUANTITY	UNIT	UNIT PRICE	AMOUNT
0020AC		1	Lump Sum		
	2- 54" RCP CULVERT PIPES, END SECTIONS, TRASHRACKS FFP				
				NET AMT	

*

ITEM NO	SUPPLIES/SERVICES	QUANTITY	UNIT	UNIT PRICE	AMOUNT
0020AD		1	Lump Sum		
	2- 54"X 54" FLAP GATES AND EQUIPMENT FFP				
				NET AMT	

*

ITEM NO	SUPPLIES/SERVICES
0021	**KENNEDY AVENUE PUMP STATION OUTFALL MODIFICATIONS** THIS IS A PARENT LINE ITEM; THEREFORE, THE BIDDER SHALL SET FORTH ITS PRICING AT THE ASSOCIATED SUB-ITEMS FOR THIS ITEM; REFER TO SUB-ITEMS 0021AA THROUGH 0021AF.

*

ITEM NO	SUPPLIES/SERVICES	QUANTITY	UNIT	UNIT PRICE	AMOUNT
0021AA		1	Lump Sum		
	CONCRETE STRUCTURE AND I-WALL FFP				
				NET AMT	

ITEM NO	SUPPLIES/SERVICES	QUANTITY	UNIT	UNIT PRICE	AMOUNT
0021AB		1	Lump Sum		
	REMOVE 48" AND 24" CULVERT PIPE FFP				
				NET AMT	

ITEM NO	SUPPLIES/SERVICES	QUANTITY	UNIT	UNIT PRICE	AMOUNT
0021AC		1,100	Square Foot		
	STEEL SHEET PILING, PZ-27 FFP				
				NET AMT	

*

ITEM NO	SUPPLIES/SERVICES	QUANTITY	UNIT	UNIT PRICE	AMOUNT
0021AD		1	Lump Sum		
	2 – 48”X48” SLUICE GATES AND EQUIPMENT FFP				
				NET AMT	

*

ITEM NO	SUPPLIES/SERVICES	QUANTITY	UNIT	UNIT PRICE	AMOUNT
0021AE		1	Lump Sum		
	2 – 48”X48” FLAP GATES AND EQUIPMENT FFP				
				NET AMT	

*

ITEM NO	SUPPLIES/SERVICES	QUANTITY	UNIT	UNIT PRICE	AMOUNT
0021AF		1	Lump Sum		
	24” RCP AND 48” RCP CULVERT PIPES FFP				
				NET AMT	

*

ITEM NO	SUPPLIES/SERVICES
0022	**NORTH DRIVE FLOODWALL** THIS IS A PARENT LINE ITEM; THEREFORE, THE BIDDER SHALL SET FORTH ITS PRICING AT THE ASSOCIATED SUB-ITEMS FOR THIS ITEM; REFER TO SUB-ITEMS 0022AA THROUGH 0022AB.

ITEM NO	SUPPLIES/SERVICES	QUANTITY	UNIT	UNIT PRICE	AMOUNT
0022AA	**STEEL SHEET PILING, PZ-27** FFP	17,800	Square Foot		
				NET AMT	

ITEM NO	SUPPLIES/SERVICES	QUANTITY	UNIT	UNIT PRICE	AMOUNT
0022AB	**CONCRETE** FFP	1	Lump Sum		
				NET AMT	

*

ITEM NO	SUPPLIES/SERVICES
0023	**BARING AVENUE I-WALL AND PUMP STATION OUTFALL** THIS IS A PARENT LINE ITEM; THEREFORE, THE BIDDER SHALL SET FORTH ITS PRICING AT THE ASSOCIATED SUB-ITEMS FOR THIS ITEM; REFER TO SUB-ITEMS 0023AA THROUGH 0023AG.

*

ITEM NO	SUPPLIES/SERVICES	QUANTITY	UNIT	UNIT PRICE	AMOUNT
0023AA	**OUTFALL STRUCTURE AND I-WALL** FFP	1	Lump Sum		
				NET AMT	

ITEM NO	SUPPLIES/SERVICES	QUANTITY	UNIT	UNIT PRICE	AMOUNT
0023AB	**STEEL SHEET PILING, PZ-22** FFP	9,000	Square Foot		
				NET AMT	

ITEM NO	SUPPLIES/SERVICES	QUANTITY	UNIT	UNIT PRICE	AMOUNT
0023AC		7,300	Square Foot		
	STEEL SHEET PILING, PZ-27 FFP				
				NET AMT	

ITEM NO	SUPPLIES/SERVICES	QUANTITY	UNIT	UNIT PRICE	AMOUNT
0023AD		1	Lump Sum		
	1 - 42" X 42" SLUICE GATE AND EQUIPMENT FFP				
				NET AMT	

ITEM NO	SUPPLIES/SERVICES	QUANTITY	UNIT	UNIT PRICE	AMOUNT
0023AE		1	Lump Sum		
	REMOVE SECTION 42" PIPING AND HEADWALL FFP				
				NET AMT	

ITEM NO	SUPPLIES/SERVICES	QUANTITY	UNIT	UNIT PRICE	AMOUNT
0023AF		1	Lump Sum		
	RIP RAP REVETMENT GRADATION FFP				
				NET AMT	

*

ITEM NO	SUPPLIES/SERVICES	QUANTITY	UNIT	UNIT PRICE	AMOUNT
0023AG		1	Lump Sum		
	42” RCP FFP				
				NET AMT	

*

ITEM NO	SUPPLIES/SERVICES
0024	
	24" GATEWELL 6-5C
	THIS IS A PARENT LINE ITEM; THEREFORE, THE BIDDER SHALL SET FORTH ITS PRICING AT THE ASSOCIATED SUB-ITEMS FOR THIS ITEM; REFER TO SUB-ITEMS 0024AA THROUGH 0024AH.

ITEM NO	SUPPLIES/SERVICES	QUANTITY	UNIT	UNIT PRICE	AMOUNT
0024AA		1	Lump Sum		
	PRELOAD EMBANKMENT FFP				
				NET AMT	

ITEM NO	SUPPLIES/SERVICES	QUANTITY	UNIT	UNIT PRICE	AMOUNT
0024AB		4,680	Linear Foot		
	PRE-FABRICATED VERTICAL DRAINAGE WICKS FFP				
				NET AMT	

ITEM NO	SUPPLIES/SERVICES	QUANTITY	UNIT	UNIT PRICE	AMOUNT
0024AC		1	Lump Sum		
	GATEWELL STRUCTURE FFP				
				NET AMT	

ITEM NO	SUPPLIES/SERVICES	QUANTITY	UNIT	UNIT PRICE	AMOUNT
0024AD		1	Lump Sum		
	1 - 24" RCP CULVERT PIPE, END SECTION, AND TRASHRACK FFP				
				NET AMT	

ITEM NO	SUPPLIES/SERVICES	QUANTITY	UNIT	UNIT PRICE	AMOUNT
0024AE		1	Lump Sum		
	HEADWALL FFP				
				NET AMT	

ITEM NO	SUPPLIES/SERVICES	QUANTITY	UNIT	UNIT PRICE	AMOUNT
0024AF		1	Lump Sum		
	1 - 24" X 24" SLUICE GATE AND EQUIPMENT FFP				
				NET AMT	

ITEM NO	SUPPLIES/SERVICES	QUANTITY	UNIT	UNIT PRICE	AMOUNT
0024AG		1	Lump Sum		
	1 - 24" X 24" FLAPGATE AND EQUIPMENT FFP				
				NET AMT	

ITEM NO	SUPPLIES/SERVICES	QUANTITY	UNIT	UNIT PRICE	AMOUNT
0024AH		1	Lump Sum		
	RIP RAP REVETMENT GRADATION FFP				
				NET AMT	

*

ITEM NO	SUPPLIES/SERVICES
0025	
	MISCELLANEOUS SHEET PILING
	THIS IS A PARENT LINE ITEM; THEREFORE, THE BIDDER SHALL SET FORTH ITS PRICING AT THE ASSOCIATED SUB-ITEMS FOR THIS ITEM; REFER TO SUB-ITEMS 0025AA THROUGH 0025AB.

ITEM NO	SUPPLIES/SERVICES	QUANTITY	UNIT	UNIT PRICE	AMOUNT
0025AA		2,050	Square Foot		
	6N TURNAROUND TOE - STEEL SHEET PILING, PZ-27 FFP				
				NET AMT	

ITEM NO	SUPPLIES/SERVICES	QUANTITY	UNIT	UNIT PRICE	AMOUNT
0025AB		1,800	Square Foot		
	6W RAMP TOE - STEEL SHEET PILING PZ-27 FFP				
				NET AMT	

*

ITEM NO	SUPPLIES/SERVICES
0026	**48" TRI-STATE GATEWELL** THIS IS A PARENT LINE ITEM; THEREFORE, THE BIDDER SHALL SET FORTH ITS PRICING AT THE ASSOCIATED SUB-ITEMS FOR THIS ITEM; REFER TO SUB-ITEMS 0026AA THROUGH 0026AG.

ITEM NO	SUPPLIES/SERVICES	QUANTITY	UNIT	UNIT PRICE	AMOUNT
0026AA		1	Lump Sum		
	PRELOAD EMBANKMENT FFP				
				NET AMT	

ITEM NO	SUPPLIES/SERVICES	QUANTITY	UNIT	UNIT PRICE	AMOUNT
0026AB		4,320	Linear Foot		
	PRE-FABRICATED VERTICAL DRAINAGE WICKS FFP				
				NET AMT	

ITEM NO	SUPPLIES/SERVICES	QUANTITY	UNIT	UNIT PRICE	AMOUNT
0026AC		1	Lump Sum		
	GATEWELL STRUCTURE WITH HEADWALLS FFP				
				NET AMT	

ITEM NO	SUPPLIES/SERVICES	QUANTITY	UNIT	UNIT PRICE	AMOUNT
0026AD		1	Lump Sum		
	1 - 48"RCP CULVERT PIPE FFP				
				NET AMT	

ITEM NO	SUPPLIES/SERVICES	QUANTITY	UNIT	UNIT PRICE	AMOUNT
0026AE		1	Lump Sum		
	1 - 48" X 48" SLUICE GATE & EQUIPMENT FFP				
				NET AMT	

ITEM NO	SUPPLIES/SERVICES	QUANTITY	UNIT	UNIT PRICE	AMOUNT
0026AF		1	Lump Sum		
	1 - 48" X 48" FLAPGATE & EQUIPMENT FFP				
				NET AMT	

ITEM NO	SUPPLIES/SERVICES	QUANTITY	UNIT	UNIT PRICE	AMOUNT
0026AG		1	Lump Sum		
	RIP RAP REVETMENT GRADATION FFP				

NET AMT

*

ITEM NO	SUPPLIES/SERVICES
0027	
	CULVERT STRUCTURE 5-8C THIS IS A PARENT LINE ITEM; THEREFORE, THE BIDDER SHALL SET FORTH ITS PRICING AT THE ASSOCIATED SUB-ITEMS FOR THIS ITEM; REFER TO SUB-ITEMS 0027AA THROUGH 0027AE.

ITEM NO	SUPPLIES/SERVICES	QUANTITY	UNIT	UNIT PRICE	AMOUNT
0027AA		1	Lump Sum		
	1 - 12" AND 1 - 24" RCP CULVERT PIPES, 2 - TRASHRACKS, 2 END SECTIONS, 1 CATCH BASIN, AND 1 PRECAST MANHOLE FFP				

NET AMT

ITEM NO	SUPPLIES/SERVICES	QUANTITY	UNIT	UNIT PRICE	AMOUNT
0027AB		1	Lump Sum		
	1 - HEADWALL FFP				
				NET AMT	

ITEM NO	SUPPLIES/SERVICES	QUANTITY	UNIT	UNIT PRICE	AMOUNT
0027AC		1	Lump Sum		
	1 - 24" X 24" FLAPGATE FFP				
				NET AMT	

ITEM NO	SUPPLIES/SERVICES	QUANTITY	UNIT	UNIT PRICE	AMOUNT
0027AD		1	Lump Sum		
	REMOVAL OF EXISTING CMP CULVERT INCLUDING INLET AND OUTLET STRUCTURES FFP				
				NET AMT	

ITEM NO	SUPPLIES/SERVICES	QUANTITY	UNIT	UNIT PRICE	AMOUNT
0027AE		1	Lump Sum		
	RIP RAP REVETMENT GRADATION FFP				
				NET AMT	

*

ITEM NO	SUPPLIES/SERVICES
0028	
	CULVERT STRUCTURE 6-3C
	THIS IS A PARENT LINE ITEM; THEREFORE, THE BIDDER SHALL SET FORTH ITS PRICING AT THE ASSOCIATED SUB-ITEMS FOR THIS ITEM; REFER TO SUB-ITEMS 0028AA THROUGH 0028AF.

ITEM NO	SUPPLIES/SERVICES	QUANTITY	UNIT	UNIT PRICE	AMOUNT
0028AA		1	Lump Sum		
	PRELOAD EMBANKMENT FFP				
				NET AMT	

ITEM NO	SUPPLIES/SERVICES	QUANTITY	UNIT	UNIT PRICE	AMOUNT
0028AB		4,320	Linear Foot		
	PRE-FABRICATED VERTICAL DRAINAGE WICKS FFP				
				NET AMT	

ITEM NO	SUPPLIES/SERVICES	QUANTITY	UNIT	UNIT PRICE	AMOUNT
0028AC		1	Lump Sum		
	1-24" RCP CULVERT PIPE, END SECTION, TRASHRACK, AND PRECAST MANHOLE FFP				
				NET AMT	

ITEM NO	SUPPLIES/SERVICES	QUANTITY	UNIT	UNIT PRICE	AMOUNT
0028AD		1	Lump Sum		
	HEADWALL FFP				
				NET AMT	

ITEM NO	SUPPLIES/SERVICES	QUANTITY	UNIT	UNIT PRICE	AMOUNT
0028AE		1	Lump Sum		
	1 - 24" X 24" FLAPGATE FFP				
				NET AMT	

ITEM NO	SUPPLIES/SERVICES	QUANTITY	UNIT	UNIT PRICE	AMOUNT
0028AF		1	Lump Sum		
	RIP RAP REVETMENT GRADATION FFP				
				NET AMT	

*

ITEM NO	SUPPLIES/SERVICES
0029	
	CULVERT STRUCTURE 6-7C
	THIS IS A PARENT LINE ITEM; THEREFORE, THE BIDDER SHALL SET FORTH ITS PRICING AT THE ASSOCIATED SUB-ITEMS FOR THIS ITEM; REFER TO SUB-ITEMS 0029AA THROUGH 0029AG.

ITEM NO	SUPPLIES/SERVICES	QUANTITY	UNIT	UNIT PRICE	AMOUNT
0029AA		1	Lump Sum		
	PRELOAD EMBANKMENT FFP				
				NET AMT	

ITEM NO	SUPPLIES/SERVICES	QUANTITY	UNIT	UNIT PRICE	AMOUNT
0029AB		5,760	Linear Foot		
	PRE-FABRICATED VERTICAL DRAINAGE WICKS FFP				
				NET AMT	

ITEM NO	SUPPLIES/SERVICES	QUANTITY	UNIT	UNIT PRICE	AMOUNT
0029AC		1	Lump Sum		
	1 - 24" RCP CULVERT PIPE, END SECTION, TRASHRACK, AND PRECAST MANHOLE FFP				
				NET AMT	

ITEM NO	SUPPLIES/SERVICES	QUANTITY	UNIT	UNIT PRICE	AMOUNT
0029AD		1	Lump Sum		
	HEADWALL FFP				
				NET AMT	

ITEM NO	SUPPLIES/SERVICES	QUANTITY	UNIT	UNIT PRICE	AMOUNT
0029AE		1	Lump Sum		
	1 -24" X 24" FLAPGATE FFP				
				NET AMT	

ITEM NO	SUPPLIES/SERVICES	QUANTITY	UNIT	UNIT PRICE	AMOUNT
0029AF		1	Lump Sum		
	REMOVAL OF EXISTING METAL CULVERT FFP				
				NET AMT	

ITEM NO	SUPPLIES/SERVICES	QUANTITY	UNIT	UNIT PRICE	AMOUNT
0029AG		1	Lump Sum		
	RIP RAP REVETMENT GRADATION FFP				
				NET AMT	

*

ITEM NO	SUPPLIES/SERVICES
0030	
	WICKER PARK I-WALL
	THIS IS A PARENT LINE ITEM; THEREFORE, THE BIDDER SHALL SET FORTH ITS PRICING AT THE ASSOCIATED SUB-ITEMS FOR THIS ITEM; REFER TO SUB-ITEMS 0030AA THROUGH 0030AB.

ITEM NO	SUPPLIES/SERVICES	QUANTITY	UNIT	UNIT PRICE	AMOUNT
0030AA		1	Lump Sum		
	CONCRETE FFP				
				NET AMT	

ITEM NO	SUPPLIES/SERVICES	QUANTITY	UNIT	UNIT PRICE	AMOUNT
0030AB	**STEEL SHEET PILING, PZ-27** FFP	7,950	Square Foot		
				NET AMT	

ITEM NO	SUPPLIES/SERVICES	QUANTITY	UNIT	UNIT PRICE	AMOUNT
0031	**NORTHCOTE SANDBAG CLOSURE** FFP	1	Lump Sum		
				NET AMT	

ITEM NO	SUPPLIES/SERVICES	QUANTITY	UNIT	UNIT PRICE	AMOUNT
0032	**CONCRETE CURB** FFP	74	Linear Foot		
				NET AMT	

*

ITEM NO	SUPPLIES/SERVICES	QUANTITY	UNIT	UNIT PRICE	AMOUNT
0033		1	Lump Sum		

PERFORMANCE & PAYMENT BONDS
THIS IS A COST REIMBURSABLE ITEM - The Government will reimburse the Contractor for the actual cost of acceptable performance and payments bonds, upon receiving evidence of payment (paid invoice) from the bonding company or agency, not to exceed the total amount of the contract line item. The Government will not pay more than the total line item amount for the performance and payment bonds. If the actual cost of the bonds is less than the line item amount, the contract will modified to adjust the line item accordingly. Adjustment(s) to the line item will also be made for any revisions to the actual bond costs associated with contract changes.

NOT TO EXCEED

OPTION BID ITEMS 0034AA THROUGH 0043AC

*

ITEM NO	SUPPLIES/SERVICES
0034 OPTION	**PEDESTRIAN BRIDGE WEST OF KENNEDY**

THIS IS A PARENT LINE ITEM; THEREFORE, THE BIDDER SHALL SET FORTH ITS PRICING AT THE ASSOCIATED SUB-ITEMS FOR THIS ITEM; REFER TO SUB-ITEMS 0034AA THROUGH 0034AH.

ITEM NO	SUPPLIES/SERVICES	QUANTITY	UNIT	UNIT PRICE	AMOUNT
0034AA OPTION	**CONCRETE ABUTMENTS** FFP	2	Each		
				NET AMT	

ITEM NO	SUPPLIES/SERVICES	QUANTITY	UNIT	UNIT PRICE	AMOUNT
0034AB OPTION	**CONCRETE PIER** FFP	1	Each		
				NET AMT	

ITEM NO	SUPPLIES/SERVICES	QUANTITY	UNIT	UNIT PRICE	AMOUNT
0034AC OPTION	**SEGMENTAL BLOCK WALL** FFP	1	Lump Sum		
				NET AMT	

ITEM NO	SUPPLIES/SERVICES	QUANTITY	UNIT	UNIT PRICE	AMOUNT
0034AD		1	Lump Sum		
OPTION	**PRE-FABRICATED PEDESTRIAN BRIDGE** FFP				
				NET AMT	

ITEM NO	SUPPLIES/SERVICES	QUANTITY	UNIT	UNIT PRICE	AMOUNT
0034AE		2	Each		
OPTION	**BOLLARDS WITH SLEEVES AND HARDWARE** FFP				
				NET AMT	

ITEM NO	SUPPLIES/SERVICES	QUANTITY	UNIT	UNIT PRICE	AMOUNT
0034AF		651	Square Foot		
OPTION	**PZC13 SHEET PILING** FFP				
				NET AMT	

ITEM NO	SUPPLIES/SERVICES	QUANTITY	UNIT	UNIT PRICE	AMOUNT
0034AG		1,056	Linear Foot		
OPTION	**HP 12X63 PILE** FFP				

NET AMT

*

ITEM NO	SUPPLIES/SERVICES	QUANTITY	UNIT	UNIT PRICE	AMOUNT
0034AH		1	Lump Sum		
OPTION	**PERFORMANCE AND PAYMENT BONDS** **THIS IS A COST REIMBURSABLE ITEM -** The Government will reimburse the Contractor for the actual cost of acceptable performance and payments bonds, upon receiving evidence of payment (paid invoice) from the bonding company or agency, not to exceed the total amount of the contract line item. The Government will not pay more than the total line item amount for the performance and payment bonds. If the actual cost of the bonds is less than the line item amount, the contract will modified to adjust the line item accordingly. Adjustment(s) to the line item will also be made for any revisions to the actual bond costs associated with contract changes.				

NOT TO EXCEED

*

ITEM NO	SUPPLIES/SERVICES
0035	
OPTION	**PEDESTRIAN BRIDGE EAST OF KENNEDY** THIS IS A PARENT LINE ITEM; THEREFORE, THE BIDDER SHALL SET FORTH ITS PRICING AT THE ASSOCIATED SUB-ITEMS FOR THIS ITEM; REFER TO SUB-ITEMS 0035AA THROUGH 0035AG.

ITEM NO	SUPPLIES/SERVICES	QUANTITY	UNIT	UNIT PRICE	AMOUNT
0035AA OPTION	**CONCRETE ABUTMENTS** FFP	2	Each		
				NET AMT	

ITEM NO	SUPPLIES/SERVICES	QUANTITY	UNIT	UNIT PRICE	AMOUNT
0035AB OPTION	**CONCRETE PIER** FFP	2	Each		
				NET AMT	

ITEM NO	SUPPLIES/SERVICES	QUANTITY	UNIT	UNIT PRICE	AMOUNT
0035AC OPTION	**PRE-FABRICATED PEDESTRIAN BRIDGE** FFP	1	Lump Sum		
				NET AMT	

ITEM NO	SUPPLIES/SERVICES	QUANTITY	UNIT	UNIT PRICE	AMOUNT
0035AD		2	Each		
OPTION	**BOLLARDS WITH SLEEVES AND HARDWARE** FFP				
				NET AMT	

ITEM NO	SUPPLIES/SERVICES	QUANTITY	UNIT	UNIT PRICE	AMOUNT
0035AE		1,443	Square Foot		
OPTION	**PZC18 SHEET PILING** FFP				
				NET AMT	

ITEM NO	SUPPLIES/SERVICES	QUANTITY	UNIT	UNIT PRICE	AMOUNT
0035AF		1,040	Linear Foot		
OPTION	**HP 12X63 PILE** FFP				
				NET AMT	

*

ITEM NO	SUPPLIES/SERVICES	QUANTITY	UNIT	UNIT PRICE	AMOUNT
0035AG		1	Lump Sum		
OPTION	**PERFORMANCE AND PAYMENT BONDS** **THIS IS A COST REIMBURSABLE ITEM -** The Government will reimburse the Contractor for the actual cost of acceptable performance and payments bonds, upon receiving evidence of payment (paid invoice) from the bonding company or agency, not to exceed the total amount of the contract line item. The Government will not pay more than the total line item amount for the performance and payment bonds. If the actual cost of the bonds is less than the line item amount, the contract will modified to adjust the line item accordingly. Adjustment(s) to the line item will also be made for any revisions to the actual bond costs associated with contract changes.				
				NOT TO EXCEED	

ITEM NO	SUPPLIES/SERVICES	QUANTITY	UNIT	UNIT PRICE	AMOUNT
0036		1	Lump Sum		
OPTION	**UPGRADE HAND RAILING TO WROUGHT IRON ON PEDESTRIAN BRIDGE EAST OF KENNEDY AVENUE** FFP				
				NET AMT	

ITEM NO	SUPPLIES/SERVICES	QUANTITY	UNIT	UNIT PRICE	AMOUNT
0037		1	Lump Sum		
OPTION	**UPGRADE TO A CAST IN PLACE CONCRETE DECK ON PEDESTRIAN BRIDGE EAST OF KENNEDY AVENUE** FFP				
				NET AMT	

*

ITEM NO	SUPPLIES/SERVICES
0038	
OPTION	**NORTH RAIL ROAD CLOSURE**
	THIS IS A PARENT LINE ITEM; THEREFORE, THE BIDDER SHALL SET FORTH ITS PRICING AT THE ASSOCIATED SUB-ITEMS FOR THIS ITEM; REFER TO SUB-ITEMS 0038AA THROUGH 0038AC.

ITEM NO	SUPPLIES/SERVICES	QUANTITY	UNIT	UNIT PRICE	AMOUNT
0038AA		375	Square Foot		
OPTION	**STEEL SHEET PILING, PZ-27** FFP				
				NET AMT	

ITEM NO	SUPPLIES/SERVICES	QUANTITY	UNIT	UNIT PRICE	AMOUNT
0038AB		1	Lump Sum		
OPTION	**STRUCTURE AND APPURTENANCES** FFP				
				NET AMT	

*

ITEM NO	SUPPLIES/SERVICES	QUANTITY	UNIT	UNIT PRICE	AMOUNT
0038AC		1	Lump Sum		
OPTION	**PERFORMANCE AND PAYMENT BONDS** **THIS IS A COST REIMBURSABLE ITEM -** The Government will reimburse the Contractor for the actual cost of acceptable performance and payments bonds, upon receiving evidence of payment (paid invoice) from the bonding company or agency, not to exceed the total amount of the contract line item. The Government will not pay more than the total line item amount for the performance and payment bonds. If the actual cost of the bonds is less than the line item amount, the contract will modified to adjust the line item accordingly. Adjustment(s) to the line item will also be made for any revisions to the actual bond costs associated with contract changes.				
				NOT TO EXCEED	

*

ITEM NO	SUPPLIES/SERVICES
0039	
OPTION	**SOUTH RAIL ROAD CLOSURE** THIS IS A PARENT LINE ITEM; THEREFORE, THE BIDDER SHALL SET FORTH ITS PRICING AT THE ASSOCIATED SUB-ITEMS FOR THIS ITEM; REFER TO SUB-ITEMS 0039AA THROUGH 0039AC.

ITEM NO	SUPPLIES/SERVICES	QUANTITY	UNIT	UNIT PRICE	AMOUNT
0039AA		375	Square Foot		
OPTION	**STEEL SHEET PILING, PZ-27** FFP				
				NET AMT	

ITEM NO	SUPPLIES/SERVICES	QUANTITY	UNIT	UNIT PRICE	AMOUNT
0039AB OPTION	**STRUCTURE AND APPURTENANCES** FFP	1	Lump Sum		
				NET AMT	

*

ITEM NO	SUPPLIES/SERVICES	QUANTITY	UNIT	UNIT PRICE	AMOUNT
0039AC OPTION	**PERFORMANCE AND PAYMENT BONDS** **THIS IS A COST REIMBURSABLE ITEM -** The Government will reimburse the Contractor for the actual cost of acceptable performance and payments bonds, upon receiving evidence of payment (paid invoice) from the bonding company or agency, not to exceed the total amount of the contract line item. The Government will not pay more than the total line item amount for the performance and payment bonds. If the actual cost of the bonds is less than the line item amount, the contract will modified to adjust the line item accordingly. Adjustment(s) to the line item will also be made for any revisions to the actual bond costs associated with contract changes.	1	Lump Sum		
				NOT TO EXCEED	

*

ITEM NO	SUPPLIES/SERVICES
0040 OPTION	**UTILITY CORRIDOR I-WALL, 6N EAST** THIS IS A PARENT LINE ITEM; THEREFORE, THE BIDDER SHALL SET FORTH ITS PRICING AT THE ASSOCIATED SUB-ITEMS FOR THIS ITEM; REFER TO SUB-ITEMS 0040AA THROUGH 0040AF.

ITEM NO	SUPPLIES/SERVICES	QUANTITY	UNIT	UNIT PRICE	AMOUNT
0040AA OPTION	**STEEL SHEET PILING, PZ-35** FFP	10,800	Square Foot		
				NET AMT	

ITEM NO	SUPPLIES/SERVICES	QUANTITY	UNIT	UNIT PRICE	AMOUNT
0040AB OPTION	**CONCRETE** FFP	1	Lump Sum		
				NET AMT	

*

ITEM NO	SUPPLIES/SERVICES	QUANTITY	UNIT	UNIT PRICE	AMOUNT
0040AC OPTION	**24" CLOSURE STRUCTURE** FFP	1	Lump Sum		
				NET AMT	

ITEM NO	SUPPLIES/SERVICES	QUANTITY	UNIT	UNIT PRICE	AMOUNT
0040AD OPTION	**1 - 24" X 24" FLAPGATE MOUNTED TO I-WALL** FFP	1	Lump Sum		
				NET AMT	

ITEM NO	SUPPLIES/SERVICES	QUANTITY	UNIT	UNIT PRICE	AMOUNT
0040AE OPTION	**1- 24"X24" SLUICE GATE MOUNTED TO I-WALL** FFP	1	Lump Sum		
				NET AMT	

*

ITEM NO	SUPPLIES/SERVICES	QUANTITY	UNIT	UNIT PRICE	AMOUNT
0040AF OPTION	**PERFORMANCE AND PAYMENT BONDS** **THIS IS A COST REIMBURSABLE ITEM -** The Government will reimburse the Contractor for the actual cost of acceptable performance and payments bonds, upon receiving evidence of payment (paid invoice) from the bonding company or agency, not to exceed the total amount of the contract line item. The Government will not pay more than the total line item amount for the performance and payment bonds. If the actual cost of the bonds is less than the line item amount, the contract will modified to adjust the line item accordingly. Adjustment(s) to the line item will also be made for any revisions to the actual bond costs associated with contract changes.	1	Lump Sum		
				NOT TO EXCEED	

*

ITEM NO	SUPPLIES/SERVICES
0041 OPTION	**UTILITY CORRIDOR I-WALL, 6N WEST** THIS IS A PARENT LINE ITEM; THEREFORE, THE BIDDER SHALL SET FORTH ITS PRICING AT THE ASSOCIATED SUB-ITEMS FOR THIS ITEM; REFER TO SUB-ITEMS 0041AA THROUGH 0041AC.

ITEM NO	SUPPLIES/SERVICES	QUANTITY	UNIT	UNIT PRICE	AMOUNT
0041AA OPTION	**STEEL SHEET PILING, PZ-27** FFP	1,250	Square Foot		
				NET AMT	

ITEM NO	SUPPLIES/SERVICES	QUANTITY	UNIT	UNIT PRICE	AMOUNT
0041AB OPTION	**CONCRETE** FFP	1	Lump Sum		
				NET AMT	

*

ITEM NO	SUPPLIES/SERVICES	QUANTITY	UNIT	UNIT PRICE	AMOUNT
0041AC OPTION	**PERFORMANCE AND PAYMENT BONDS** **THIS IS A COST REIMBURSABLE ITEM -** The Government will reimburse the Contractor for the actual cost of acceptable performance and payments bonds, upon receiving evidence of payment (paid invoice) from the bonding company or agency, not to exceed the total amount of the contract line item. The Government will not pay more than the total line item amount for the performance and payment bonds. If the actual cost of the bonds is less than the line item amount, the contract will modified to adjust the line item accordingly. Adjustment(s) to the line item will also be made for any revisions to the actual bond costs associated with contract changes.	1	Lump Sum		
				NOT TO EXCEED	

*

ITEM NO	SUPPLIES/SERVICES
0042 OPTION	**UTILITY CORRIDOR I-WALL, 6S EAST** THIS IS A PARENT LINE ITEM; THEREFORE, THE BIDDER SHALL SET FORTH ITS PRICING AT THE ASSOCIATED SUB-ITEMS FOR THIS ITEM; REFER TO SUB-ITEMS 0042AA THROUGH 0042AD.

ITEM NO	SUPPLIES/SERVICES	QUANTITY	UNIT	UNIT PRICE	AMOUNT
0042AA OPTION	**CONCRETE** FFP	1	Lump Sum		
				NET AMT	

ITEM NO	SUPPLIES/SERVICES	QUANTITY	UNIT	UNIT PRICE	AMOUNT
0042AB		2,800	Square Foot		
OPTION	**STEEL SHEET PILING, PZ-27** FFP				
				NET AMT	

ITEM NO	SUPPLIES/SERVICES	QUANTITY	UNIT	UNIT PRICE	AMOUNT
0042AC		240	Linear Foot		
OPTION	**STEEL H-PILES** FFP				
				NET AMT	

*

ITEM NO	SUPPLIES/SERVICES	QUANTITY	UNIT	UNIT PRICE	AMOUNT
0042AD		1	Lump Sum		
OPTION	**PERFORMANCE AND PAYMENT BONDS** **THIS IS A COST REIMBURSABLE ITEM -** The Government will reimburse the Contractor for the actual cost of acceptable performance and payments bonds, upon receiving evidence of payment (paid invoice) from the bonding company or agency, not to exceed the total amount of the contract line item. The Government will not pay more than the total line item amount for the performance and payment bonds. If the actual cost of the bonds is less than the line item amount, the contract will modified to adjust the line item accordingly. Adjustment(s) to the line item will also be made for any revisions to the actual bond costs associated with contract changes.				
				NOT TO EXCEED	

*

ITEM NO	SUPPLIES/SERVICES
0043	
OPTION	**UTILITY CORRIDOR I-WALL, 6S WEST**
	THIS IS A PARENT LINE ITEM; THEREFORE, THE BIDDER SHALL SET FORTH ITS PRICING AT THE ASSOCIATED SUB-ITEMS FOR THIS ITEM; REFER TO SUB-ITEMS 0043AA THROUGH 0043AC.

ITEM NO	SUPPLIES/SERVICES	QUANTITY	UNIT	UNIT PRICE	AMOUNT
0043AA		1,510	Square Foot		
OPTION	**STEEL SHEET PILING, PZ-27** FFP				
				NET AMT	

ITEM NO	SUPPLIES/SERVICES	QUANTITY	UNIT	UNIT PRICE	AMOUNT
0043AB		1	Lump Sum		
OPTION	**CONCRETE** FFP				
				NET AMT	

* ITEM NO	SUPPLIES/SERVICES	QUANTITY	UNIT	UNIT PRICE	AMOUNT
0043AC OPTION	**PERFORMANCE AND PAYMENT BONDS** **THIS IS A COST REIMBURSABLE ITEM -** The Government will reimburse the Contractor for the actual cost of acceptable performance and payments bonds, upon receiving evidence of payment (paid invoice) from the bonding company or agency, not to exceed the total amount of the contract line item. The Government will not pay more than the total line item amount for the performance and payment bonds. If the actual cost of the bonds is less than the line item amount, the contract will modified to adjust the line item accordingly. Adjustment(s) to the line item will also be made for any revisions to the actual bond costs associated with contract changes.	1	Lump Sum		_____
				NOT TO EXCEED	

TOTAL BID PRICE (ITEMS 0001 THROUGH 0043AC): $_____

*** Indicates Line Items effected by way of this Amendment 0001**

IMPORTANT NOTES:

1. **PRE-BID MEETING AND SITE VISIT:**

A Pre-Bid Meeting will be held on August 17, 2007 at 10:30 a.m. at the Little Calumet River Basin Development Commission office located at: 6100 Southport Road, Portage, Indiana 46368.

2. **BID CONDITIONS:**

a. The bidder's total price for the work shall be based on the TOTAL of all BID ITEMS included in the above Bid Schedule, with no exceptions. The Government intends to award all BID ITEMS to the successful bidder at the bid prices stated in the Bid Schedule.

b. Split awards or multiple award contracts will not result from this Solicitation.

c. Bidders are required to complete the entire Bid Schedule; therefore, any bidder who does not complete the entire Bid Schedule will be considered non-responsive to the Solicitation and ineligible for award.

3. **SMALL BUSINESS SUBCONTRACTING PLAN:**

a. Prior to the Contracting Officer awarding the contract, the successful bidder will be required to submit a Small Business Subcontracting Plan in accordance with the provision of FAR Clause 52.219-9, "Small Business Subcontracting Plan." **This requirement applies to all business concerns other than small businesses.** The Contracting Officer must approve the Plan before an award can be made; the Plan will be made apart of the resultant contract.

b. The successful bidder shall make a good faith effort to apply the following percentages to its intended amount of subcontracts in order to satisfy the Small Business Subcontracting goals of the Chicago District. The District Goals are identified below:

(1) at least 51.2% with small businesses (SB)
(2) at least 8.8% with small disadvantaged businesses (SDB)
(3) at least 7.3% with women-owned SB (WOSB)
(4) at least 1.5% with service-disabled veteran-owned SB
(5) at least 3.1% with HUBZone SB

- BIDDERS SHALL NOT INCLUDE A SMALL BUSINESS SUBCONTRACTING PLAN WITH ITS BID -

4. **SUBMISSION OF BIDS:**

a. BIDS OR MODIFICATIONS TO BIDS THAT ARE RECEIVED BY FACSIMILE OR TELETYPE WILL NOT BE CONSIDERED. All sealed Bids must be submitted in accordance with the procedures set forth in BLOCK NO. 13 of PAGE 1 of this Solicitation Document.

b. Bidders are required to acknowledge the receipt of all amendments to the Solicitation on the Standard Form 1442 in the space provided, OR by completing Blocks 8 and 15 of the Amendment (Standard Form 30), OR by separate letter, OR by telegram prior to opening of bids. Failure to acknowledge all amendments may cause rejection of the bid.

c. SF 1442 BACK (Page 2 of the Solicitation): Bidders shall fully complete all the required areas located under the section designated as **"OFFER"** (refer to Items 14. through 20C.)

d. SECTION 00600 (REPRESENTATIONS AND CERTIFICATIONS): The bidder must fully complete Section 00600 of this Solicitation and submit it along with all other documents required

by this Solicitation. Bids received without this Section fully completed may be rejected, considered non-responsive and ineligible for award.

e. BID GUARANTEE: The bidder is required to submit a Bid Guarantee for this procurement. Any bidder failing to submit an authentic Bid Guarantee will be considered non-responsive to the Solicitation and ineligible for award. The Bid Guarantee shall be in the amount of 20% percent of the bidder's bid price or $3,000,000.00, whichever is less.

5. OPTIONS: BID ITEM'S 0034AA THROUGH 0043AC:

The government reserves the right to exercise any or all of the Option Bid Items under the above Bid Schedule.

At the discretion of the government, Option Bid Items 0034AA through 0043AC may be awarded within **365** days of contract award. Should Option Bid Items 0034AA through 0043AC be awarded with the stated time period, NO additional calendar days will be added to the Contract Performance Period. If any or all of the Optional Bid Items are exercised, they will be awarded by way of a formal modification, which will issued by the Contracting Officer.

WAGE DETERMINATION:

General Decision Number: IN070001 08/17/2007 IN1

Superseded General Decision Number: IN20030001

State: Indiana

Construction Types: Building, Heavy and Highway

Counties: La Porte, Lake, Porter and St Joseph Counties in Indiana.

LAKE AND PORTER COUNTIES

BUILDING CONSTRUCTION PROJECTS (does not include single family homes and apartments up to and including 4 stories, HEAVY AND HIGHWAY CONSTRUCTION PROJECTS

Modification Number	Publication Date
0	02/09/2007
1	02/16/2007
2	04/06/2007
3	04/27/2007
4	05/11/2007
5	06/01/2007
6	06/15/2007
7	06/22/2007

8	07/06/2007
9	08/03/2007
10	08/17/2007

ASBE0017-002 06/01/2007

LAKE AND PORTER COUNTIES

	Rates	Fringes
ASBESTOS WORKER/HEAT & FROST INSULATOR	$ 37.15	19.18
HAZARDOUS MATERIAL HANDLER (INCLUDES PREPARATION, WETTING, STRIPPING REMOVAL SCRAPPING, VACUUMING, BAGGING AND DISPOSAL OF ALL INSULATION MATERIALS, WHETHER THEY CONTAIN ASBESTOS OR NOT, FROM MECHANICAL SYSTEMS)	$ 24.60	13.98

ASBE0075-001 06/01/2007

REMAINING COUNTIES:

	Rates	Fringes
ASBESTOS WORKER/HEAT & FROST INSULATOR	$ 28.65	10.54
HAZARDOUS MATERIAL HANDLER (includes preparation, wetting, stripping, removal, scrapping, vaccuming, bagging, and disposal of all insulation materials, whether they contain asbestos or not, from mechanical systems)	$ 18.75	9.70

BOIL0001-005 07/01/2004

LAKE COUNTY, City of Hammond; North of 114th Street

	Rates	Fringes
BOILERMAKER	$ 35.16	4.36+19.5%

BOIL0374-003 01/01/2006

	Rates	Fringes
BOILERMAKER	$ 30.00	16.07

BRIN0004-011 06/01/2007

MERRILLVILLE
  LAKE, LAPORTE AND PORTER COUNTIES

```
                                   Rates          Fringes

Bricklayer, Stone Mason,
Marble Mason, Terrazzo
Worker, Tile Layer, Pointer,
Cle...............................$ 32.80            15.22
Marble and terrazzo finisher.....$ 22.32             7.35
Marble Setter, Terrazzo
Worker & Tile Setter.............$ 29.10            12.72
TILE FINISHER....................$ 21.32             7.35
----------------------------------------------------------------
 BRIN0004-018 06/01/2007

SOUTH BEND
  ST. JOSEPH COUNTY

                                   Rates          Fringes

BRICKLAYER
     BRICKLAYER; STONE MASON;
     POINTER, CAULKER, CLEANER...$ 26.75            10.18
     MARBLE AND TILE FINISHER....$ 23.86             8.39
     MARBLE AND TILE LAYER.......$ 25.73             9.38
     TERRAZZO FINISHER...........$ 24.86             8.39
     TERRAZZO WORKER.............$ 26.73             9.38
----------------------------------------------------------------
 CARP0765-001 06/01/2007

HEAVY, HIGHWAY AND BUILDING CONSTRUCTION

LAKE, LAPORTE AND PORTER COUNTIES

                                   Rates          Fringes

CARPENTER........................$ 32.22            17.95
MILLWRIGHT.......................$ 32.32            17.95
----------------------------------------------------------------
 CARP0888-001 06/01/2007

ST. JOSEPH COUNTY (Zone 1)

                                   Rates          Fringes

Carpenters
     BUILDING CONSTRUCTION.......$ 24.74            10.62
     HEAVY & HIGHWAY
     CONSTRUCTION................$ 24.14            10.37
MILLWRIGHT
     BUILDING CONSTRUCTION.......$ 22.96            13.45
----------------------------------------------------------------
 ELEC0153-001 06/04/2007

ST JOSEPH COUNTY

                                   Rates          Fringes
```

Communication Technician.....$ 22.30 8.17
ELECTRICIAN.....$ 27.75 13.82

Includes the installation, operation, inspection, modification, maintenance and repair of systems used for the transmission and reception of signals of any nature, for any purpose, including but not limited to, sound and voice transmission/transference systems, communication systems that transmit or receive information and/or control systems, television and video systems, micro-processor controlled fire alarm systems, and security systems and the performance of any task directly related to such installation or service. The scope of work shall exclude the installation of electrical power wiring and the installation of conduit raceways exceeding fifteen (15) feet in length.

ELEC0531-001 09/05/2005

LAPORTE AND PORTER COUNTIES

	Rates	Fringes
ELECTRICIAN.....	$ 30.63	14.02

ELEC0697-001 05/30/2005

LAKE COUNTY

	Rates	Fringes
ELECTRICIAN.....	$ 32.50	14.97

ELEC0697-004 08/29/2005

LAKE COUNTY

	Rates	Fringes
Telecommunication Technician.....	$ 25.34	11.71

Work covers low voltage installation, maintenance and removal of telecommunication facilities (voice, sound, data and video) including, telephone and data inside wire, interconnect, terminal equipment, central offices, PABX, fiber optic cable and equipment, micro waves, V/SAT, bypass, CATV, WAN (WIDE AREA NETWORKS), LAN (local area networks), and ISDN (integrated system digital network). Does not cover any work which properly comes under the work description of Inside JW (Journeyman Wireman), but shall cover the pulling of wire in raceways, but not the installation of raceways.

ELEC1393-003 08/28/2006

LAKE & PORTER COUNTIES
(Calumet Area, North of U.S. Hwy 30)

	Rates	Fringes
Line Construction:		
EQUIPMENT OPERATOR (Backhoe over 1/2 yard bucket capacity, cranes rated at 15 ton or more capacity) 95% of J.L. Rate..	$ 32.35	4.75+25.75%
GROUNDMAN, EQUIPMENT OPERATOR: (Diggers 5th wheel type trucks, crawler type, D-4 and smaller, bucket trucks and live boom type line trucks).....	$ 25.47	4.75+25.75%
GROUNDMAN.....	$ 18.91	4.75+25.75%
GROUNDMAN-TRUCK DRIVER.....	$ 22.70	4.75+25.75%
LINEMAN.....	$ 32.35	4.75+25.75%

ELEV0002-005 07/03/2002

ELEVATOR CONSTRUCTION

LAKE AND PORTER COUNTIES

	Rates	Fringes
ELEVATOR MECHANIC.....	$ 34.475	7.455+a&b

FOOTNOTES:

a. Eight Paid Holidays: New Year's Day; Veterans Day, Memorial Day; Independence Day; Labor Day; Thanksgiving Day; Friday after Thanksgiving and Christmas Day.

b. Employer contributes 8% of regular hourly rate to vacation pay credit for employee who has worked in business more than 5 years. Employer contributes 6% of regular hourly rate to vacation pay credit for employee who has worked in business less than 5 years.

ELEV0057-001 01/01/2005

LAPORTE AND ST. JOSEPH COUNTIES

	Rates	Fringes
ELEVATOR MECHANIC.....	$ 31.77	12.015+a

FOOTNOTES:

a. Employer contributes 8% basic hourly rate for 5 years or more of service or 6% basic hourly rate for 6 months to 5 years of service as vacation pay credit.

b. Eight Paid Holidays: New Year's Day; Memorial Day; Independence Day; Labor Day; Veteran's Day; Thanksgiving Day, the Friday after Thanksgiving Day and Christmas Day.

ENGI0150-001 06/01/2006

BUILDING CONSTRUCTION POWER EQUIPMENT OPERATORS:

LAKE, LAPORTE, PORTER COUNTIES

	Rates	Fringes
Power equipment operators:		
GROUP 1	$ 36.35	14.88
GROUP 2	$ 35.75	14.88
GROUP 3	$ 33.05	14.88
GROUP 4	$ 31.55	14.88
GROUP 5	$ 26.10	14.88

POWER EQUIPMENT OPERATOR CLASSIFICATIONS

GROUP 1: Asphalt Plant; Autograde; Batch Plant); Benoto (requires 2 engineers; Boiler & throttle valve; Boring machine (mining machine); Caisson Rigs; Central redi-mix plant; Combination Backhoe Endloader with backhoe bucket over 1/2 cu. yd. or with attachments; Combination tugger hoist & air compressor; Compressor & throttle; Concrete Breaker (truck mounted); Concrete conveyor; Concrete conveyor (truck mounted); Concrete paver over 27E cu.ft.; Concrete paver 27E cu. ft. & under; Concrete placing boom; Concrete pump/grout pump with boom (truck mounted); Concrete pump with boom (truck mounted); concrete tower; Cranes and Backhoes (All Attachments); Cranes, Hammerhead Tower; Creter Crane; Derricks (all); Derricks (traveling); Forklift lull type; Forklift, 10 ton & over; Gradall, Hoist 1, 2, and 3 drums; Hoist (2 tugger l floor), Hydraulic Boom truck, Laser Screed, Locomotive (all), Motor patrol, Mucking Machine; Pile Driving and Skid rig, Pit machine, Prestress Machines, Pump cretes (and similar types), Rock Drill (self-propelled), Rock Drill Truck mounted; Slip form paver, Straddle buggies, Tractor with boom and side boom, Trenching Mechine; Winch Tractors, Welding machines (6-9),

GROUP 2: Air Comporessor (3) (feeding a common receiver); Asphalt Spreader; boilers; bulldozers; Combination Backhoe end loader with Backhoe bucket 1/2 cu. yd. and under or with attachments; Corboy drilling machine; Grader, Elevating; Grouting machines; Guard rail post driver; Highlift Shovel or frontend loader; Hoist (automatic), Hoist (all elevators); Hoist (tugger and single drum); Post hole digger; rollers (all); Scoop (tractor drawn); Stone crushers; Tournapull; Winch trucks

GROUP 3: Air compressor - small 210 and under (1 to 5 not to exceed a total of 300 feet); Air compressor - large over 210; Air compressor (2) feeding a common receiver;

Combination - small equipment operator; Concrete mixer (two bag & over); Conveyor, portable; Forklift-under 10 ton; Generator; Pumps (1 to 3 not to exceed a total of 300 feet); Pumps, well points; Steam generators; Tractors, farm & similar type; Welding machines (2 thru 5); Winches, 4 electric drillo winches

GROUP 4: Bull gang (crane erection crew); Heaters, mechanical (1 to 5); Oilers; Switchmen

GROUP 5: Fork lifts (Housing and commercial only)

ENGI0150-012 06/01/2005

BUILDING CONSTRUCTION

ST. JOSEPH COUNTY

	Rates	Fringes
Power equipment operators:		
GROUP 1	$ 23.60	13.75+a
GROUP 2	$ 22.25	13.75+a
GROUP 3	$ 21.45	13.75+a
GROUP 4	$ 20.65	13.75+a
GROUP 5	$ 18.05	13.75+a

FOOTNOTE:
a. PAID HOLIDAYS: New Years Day, Fourth of July, Thanksgivng Day, Decoration Day, Labor Day and Christmas Day

POWER EQUIPMENT OPERATOR CLASSIFICATIONS

GROUP 1: Mechanic, Asphalt Plant, Asphalt Spreader, Auto Grader; Batch Plant, Benoto (requires 2 Engineers), Boiler and Throttle Valve, Boring Machine (road), Bulldozers (with engines of 140 net horse power or more) Caisson Rigs, Central Redi-mix Plant, Concrete Conveyor Systems, Concrete Power (over 27E cu. ft.), Concrete Paver (27E cu. ft. and under), Concrete Pumps/Grout cncrete placer (Truck Mounted), Concrete Tower, Cranes and backhoes (all), Cranes, Hammerhead Tower, Creter Crane, Derricks (all), Forklift (capble of hoisting and mechanically moving forks horizontally), Grader, Elevating, Highlift Shovels or Front End Loaders (over 3 yd bucket), Hoists (2 or more drums), Locomotives (all), Laser screed, Motor Patrol, Pile Drivers and Skid Rig, Pre-Stress Machines, Pump Cretes & Similar Types, Rock Drill (Self-Propelled), Rock Drill (self propelled Truck Mounted), Scoops (tractor drawn), Slip-Form Paver, Tournapull, Tractor with Boom & Side Boom, Trenching Machine (12 or more inches in width), Combination Backhoe Front End Loader Machine with backhoe 1/2 yd bucket or attachments.

GROUP 2: Air Compressor (600 cu. ft. and over), Bob Cat (over 3/4 cu. yd.), Boilers, Broom (all powered propelled),

Bull Dozers with engines of less than 140 net horsepower, combination backhoe front end loader 1/2 yf bskhhoe or under, Compressor and Throttle Valve, Concrete Breaker (truck mounted), Concrete Mixer (of moore than 21 cu. ft. capacity), Forklift (with fixed or tilt mast), Greaser Engineer, Highlift shovel or front endloader 3 yd bucket and under, Hoists (1 drum), Hydrulic Boom Truck, Post Hole Digger (vehicle mounted), Pump Cretes (squeze crete type pumps, Gypsum, bulker , Rollers(all), Steam Generators, Stone Crushers, Stradddle Buggies, Tractors, Winch Trucks (with "a" frame.

GROUP 3: Buck Hoist, Combination (small equipment operator), .Conveyor (portable), Grouting Machine, Hoist Elevators (material and personnel), Hydraulic Power Units, Grouting and Pile Driving, Stud Welder, Trenching Machines less than 12 inches in width, Welding Machines (8 through 15).

GROUP 4: Bobcat (up to and including 3/4 cu. yd.). Compressor (over 210 cu. ft. and less than 600 cu. ft.), Generator (over 50 kw.), Heaters, Mechanical, Hoists (all elevator, permanent installation), Hoist (automatic), Hoist (tugger single drum), Oilers, Pumps, Well Points and electric submersible, Small Rubber Tired End Loaders (1/4 cu. yd. and under), Tractors (farm type) Welding Machines (2 through 8)

GROUP 5: Bobcats and forklifts (commercial or residential)

ENGI0150-014 05/01/2006

POWER EQUIPMENT OPERATOR HEAVY/HIGHWAY

LAKE, LAPORTE, PORTER AND ST. JOSEPH COUNTIES

	Rates	Fringes
Power equipment operators:		
GROUP 1	$ 33.95	14.95
GROUP 2	$ 33.50	14.95
GROUP 3	$ 33.05	14.95
GROUP 4	$ 31.85	14.95
GROUP 5	$ 30.80	14.95

POWER EQUITMENT OPERATOR CLASSIFICATIONS

GROUP 1: Asphalt plants (construction), Asphalt plant (permanent), Auto Patrol (Maintainer), Automatic Dry Batch Plant, Automated Concrete Placer, Automated Sub-Grader, Automated Slip Form Paver, Automated Finish Machine, Combination Backhoe Front, End Loader Machine (1/2 cu. yd.), Backhoe bucket or over or with attachments), Combination backhoe 1 cu yd, Backhoe bucket or over or with attachments, Ballast Regulator (RR), Belt Loader (stationary), Boring Machine (road), Bulldozer, Concrete Mixer(27 cu. ft. or over), Concrete Pump (truck mounted),

Concrete Breaker (truck mounted and self-propelled), Core Drilling Machine, Cranes and Backhoes (all attachments), Cranes, Hammerhead, Creter Crane, Crushers (concrete, rock, recycling, etc.), Derricks , Derricks (traveling), Dredge Operator, Formless Curb and Gutter Machine (36 inches and over), Formless Curb and Gutter Machine under 36 inches, Gradall and Machines (of a like nature), Guardrail Post Driver (truck mounted), Lead Greaser, Helicopter, Highlift Shovel (3 yd. and over), Hoist (1 drum), Hoist (2, and 3 drums), Hydraulic Power Units (grouting, piledriving and extracting) Hydro or water blaster (self-propelled), Locomotive Operators, Mechanic, Welder, Mucking Machine, Panelboard Concrete Plant (central mix type), Paver (Hetherington), Pile Driver (Skid or Crawler), Road Paving Mixer, Rock Drill Crawler or Skid Rig, Rock Drill (truck Mounted), Ross Carrier, Roto Mill Grinder (36" and over), Roto mill grinder (less than 36"), Throttle Valve and Compressor or Clever Brooks Type Combination, Throttle Valve and Fireman Combination or Horizontal or Upright Boiler, Tournapull or similar type equipment, Tractor (boom), Tractor Drawn Belt Loader with attached Pusher (requires two engineers), Trench Machine, Tug Boat Operator, Wheel Excavator, Winch Tractor with "a" frame, Scoops, Turnapull or similar types machine used in Tandem (add $1.00 to class l hourly rate for each machine attached there to).

GROUP 2: Combination Backhoe Front End Loader Machine with less than 1/2 cu. yd., Backhoe Bucket or with attachments, Bituminous Mixer, Bituminous Paver, Bridge Deck Finisher, Concrete Mixer (less than 27 cu. ft.), Compressor and throttle valve, Compressor (common receiver 3), Greaser, Highlift Shovels (under 3 cu. yds.), Jersey Spreader or Base Paver, Pavement Bump Grinder (self-propelled), Roller (Asphalt, waterbound, Macadam, Bituminous Macadam, Brick Surface, Sheepfoot Roller (self- propelled with blade), Surface Heater and Planer, Tamper (mutiple vibrating, asphalt waterbound macadam, bituminouus macadam, brick surface), Tractor (push), Tractor with scoop, Widener, Apsco or similar type.

GROUP 3: Back Filler, Bituminous Distributor, Broom and Belt Machine, Bull Float, Compressor (common receiver 2), Concrete cutter wheel type (rockwell), Concrete Finishing Machine, Concrete Spreader (power driven), Digger, Post Hole (power driven), Finishing Machine and Bull Float, Forklift, Form Grader, Form Tamper (motor driven), Hydraulic (boom truck) when used for hauling materials, Laser screed, Mutiple Tamping Machine, Paving Breaker, Roller (earth and subbase material), Roller sheepfoot (self-propelled), Sub-grader, Tamper, Mutipile Vibrating (earth and subbase material), Tractaire with Drill, Tractor (with all drawn attachements except backhoe and including Highlift, Endloader of 1 cu. yd. capacity and less.

GROUP 4: Air Compressors, Conveyor (all), Fireman on Boiler,

Generator, Grout Machine, Power curing Spraying Machine (self-propelled), Broom (self-propelled), Seaman Tiller, Skid steer loaders, Spike Machine (RR), Stripping Machine (paint, self-propelled), Throttle Valve, Welding Machine, Well Points System.

GROUP 5: Deck Hand, Hetherington Driver, Mechanical Heater (1 to 5), Outboard or Inboard Motor Boat, Oiler, Power Saw (Concrete Power Driven), Water Pump, Grasscutter.

IRON0292-001 01/01/2006

ST. JOSEPH and LAPORTE (REMAINDER OF COUNTY)

	Rates	Fringes
IRONWORKER	$ 21.55	14.18

IRON0395-001 06/01/2005

LAKE, PORTER AND LAPORTE (FROM LAKE MICHIGAN ON NORTH TO 50 MILES S. OF LAKE MICHIGAN ON THE S. AND FROM IN/IL STATE LINE ON W. TO 3 MILES E. OF IN. COUNTIES

	Rates	Fringes
Ironworkers:		
SHEETER	$ 29.50	15.77
STRUCTURAL & ORNAMENTAL	$ 29.25	15.77

LABO0041-001 06/01/2007

BUILDING CONSTRUCTION:

LAKE (Western Half)

	Rates	Fringes
Laborers:		
BUILDING CONSTRUCTION		
GROUP 1	$ 28.28	10.30
GROUP 2	$ 29.03	10.30
GROUP 3	$ 29.28	10.30
CAISSON AND TUNNEL WORK (Compressed & Free Air)		
GROUP 1	$ 29.78	10.30

LABORER CLASSIFICATIONS

GROUP 1: Building and Construction Laborers; Scaffold Builders (other than for Mason or Plasterers); Railroad Workers, Masonry Wall Workers, (interior & exterior); Portable Water, Pumps with discharge up to 3 indches; Handling of Creosote Lumber or Like Treated Material (excluding railroad material); Asphalt Rakers and Lutemen;

Earth compactors; Jackmen and Sheetmen Working Ditches Deeper than Six (6) Feet in Depth; Laborers Working Ditches Six (6) Feet in Depth or Deeper; Assembly of Unicrete Pump; Tile Layers (sewer or field) and Sewer Pipe Layers (metallic or non-metallic); Motor Driven Wheelbarrows and Concrete Buggies; Hyster Operators; Pump Crete Assemblers; Core Drill Operators; Cement, Lime or Silica Clay Handler (bulk or bag); Handling of Toxic Materail Damaging to Clothing; Pneumatic Spikers; Deck Engine and Winch Operators; Water main and Cable Ducking (metallic and non-metallic); Screed Man or Screw Operator on Asphalt Paver; Chain Saw and Demolition Saw Operators; Concrete Saw; Concrete Conveyor Assemblers; Applying of Curing Compound; Sinking of Wellpoints; Dewatering Header Systems

GROUP 2: Plaster Tenders, Masons Tenders; Mortar Mixers; Welders (acetylene or electric); Cutting Torch or Burner; Cement Nozzle Laborers; Cement Gun Operators; Scaffold Builders for Plasterers; Scaffold Builders for Masons; Water Blast Machine Operators; Air Tool Operators and all Pneumatic Tool Operators, Air and Electric Vibrators and Chpping Hammer Operators; Asbestos Removal; Hazardous Waste Removal; All Boiler Setters Laborers, including expediters, bottom men, bell men, and Mason Tenders

GROUP 3: Dynamite Men; Drillers, Air Track or Wagon Drilling for explosives.

CAISSON AND TUNNEL WORK (Compressed & Free Air)

GROUP 1: Cage Tenders, Dump Men, Flagman, Signalman, Top Laborers, Rod Men, Concrete Repairmen, Motor Men, Muckers, Grout Machine, Track Layers, Air Hoist, Key Board, Agitator Car, Car Pushers, Concrete Laborers, Grout Laborers, Sttl Setters, Tuggers, Switchmen, Mucking Machine, Laser Beam, Liner Plate & Ring Setter, Shield Drivers, Power Knife, Burners, Pipe Jacking Machine, Skinners, Maintenance Technician, Miner, Bricklayer Tenders, Concrete Blowers, Drillers, Erectors, Form Men, Jackhammermen, Mining Machine, Dynamite Men, Drillers-air track or wagon drilling for explosives.

Premium for all employees working in compressed air shall be as follows:

0 - 15 lbs.	$1.00 per hour
16 - 20 lbs.	1.50 per hour
21 - 26 lbs.	2.00 per hour
27 - 33 lbs.	3.00 per hour
34 & over	4.00 per hour

LABO0041-004 04/01/2007

LAKE (WESTERN HALF)

	Rates	Fringes

Laborers
HEAVY AND HIGHWAY
CONSTRUCTION

GROUP 1	$ 21.99	9.45
GROUP 2	$ 22.29	9.45
GROUP 3	$ 22.99	9.45

LABORERS (HEAVY AND HIGHWAY) CONSTRUCTION

GROUP 1: Constructino Laborer, Carpenter Tender, Fence Erector, Grade Checker, Guard Rail Erector, Continuous Steel Rod or Mat Installer, Wire Mesh Layer, Joint Man (Mortar, Mastic, and all other types), Lighting Installer (Permanent or Temporary), Lineman for Automatic Grade Maker on Paving Machines, Mortar Man, Multi-Plant Erector, Rip-rap Installer (all Products and Materials), Road Marking and Delineation Laborer, Setting and Placing of all Precast Concrete Products, Sing Installation including supporting structure, Spraying of all Epoxy, Curing Compound, or Like Material, Flagperson, Air Tool, Power Tool, and Power Equipment Operator, Asphalt Raker Man, Batch Truck Dumper, Bridge Hand Rail ERector, Handler (bulk or bag cement), Chain Saw Man, Concrete Puddler, Concrete Rubber, Concrete Saw Operator, Core Drill Operator, Eye Level, Hand Blade Operator Hydro Seeder Man, Motor Driven Georgia Buggy Operator, Power Driven Compactor or Taper Operator, Power Saw Operator, Pump Crete Assembly Man, Sreed Man or Screw Man on Asphalt Paver, Regar Installer, Sandblaster Man, Sealer Applicator for Asphalt (toxic), Setting and Placing pre-stressed on Pre-cast Concrete Structural Members, Side Rail Setters (for Sidewalk, Side Ditches, Radii, and Pavement), Spreader Box Tender (manua or power driven), Straw Blower Man, Subsureface Drain and Culvert Pipe Layer, Transverse and longitudinal Hand Bull Float Man, Concrete Conveyor, Horizonal Boring and Jackman and Sheetman, Pipe Greade Man, Winch and Windless Operator Conduit Installer, Sod Layer

GROUP 2: Cutting Torch Burner, Laser Beam Aligner, Manhole Erector, Sewer Pipe Layer, Water Line Installer, Temporary or Permanent Welders (electric or Oxy Acetylene)

GROUP 3: Air Track and Wagon Drillman, Dynamite and Powder Man, Concrete Barrier Rail Form Setter, General Laborer, Concrete Finisher Transverse and longitudinal hand, bull float man, concrete saw, join control cutting

---

LABO0081-001 04/01/2007

HEAVY and HIGHWAY CONSTRUCTION:

LAKE (Eastern Half), LA PORTE AND PORTER COUNTIES

	Rates	Fringes

Laborers:

GROUP 1	$ 21.99	9.45
GROUP 2	$ 22.29	9.45
GROUP 3	$ 22.99	9.45

LABORERS (HEAVY AND HIGHWAY) GROUP DESCRIPTIONS

GROUP 1: Construction Laborer; Carpenter Tender; Fence Erector; Grade Checker; Guard Rail Erector; Continuous Steel Rod or Mat Installer; Wire Mesh Layer; Joint Man (Mortar, Mastic, and all other types); Lighting Installer (Permanent or Temporary); Lineman for Automatic Grade Maker on Paving Machines; Mortar Man; Multi-Plant Erector; Rip-rap Installer (all Products and Materials); Road Marking and Delineation Laborer; Setting and Placeing of all Precast Concrete Products; Sing Installation including Supporting Structure; Spraying of all Epoxy, Curing Compound, or Like Material; Flagperson; Air Tool, Power Tool, and Power Equipment Operator; Asphalt Raker Man; Batch Truck Dumper; Bridge Hand Rail Erector; Handler (bulk or bag cement); Chain Saw Man; Concrete Puddler; Concrete Rubber; Concrete Saw Operator; Core Drill Operator, Eye Level; Hand Blade Operator Hydro Seeder Man; Motor Driven Georgia Buggy Operator; Power Driven Compactor or Tamper Operator; Power Saw Operator; Pump Crete Assembly Man; Screed Man or Screw Man on Asphalt Paver; Rebar Installer; Sandblaster Man; Sealer Applicator for Asphalt (toxic); Setting and Placeing Prestressed on Precast Concrete Structural Members; Side Rail Setters (for Sidewalk, Side Ditches, Radii, and Pavement); Spreader Box Tender (manual or power driven); Straw Blower Man; Subsurface Drain and Culvert Pipe Layer; Transverse and and longitudinal Hand Bull Float Man; Concrete Conveyor; Horizonial Boring and Jackman and Sheetman; Pipe Grade Man; Winch and Windlass Operator Conduit Installer, Sod Layer.

GROUP 2: Cutting Torch Burner: Laser Beam Aligner; Manhole Erector; Sewer Pipe Layer; Water Line Installer, Temporary or Permanent; Welders (electric or Oxy-Acetylene).

GROUP 3: Air Track and Wagon Drillman; Dynamite and Powder Man; Concrete Barrier Rail Form Setter; General Laborer; Concrete finisher; transverse and longitudinal hand; bull float man, concrete saw, joint control cutting

---

LABO0081-004 06/01/2007

LAKE (Eastern Half), LA PORTE AND PORTER COUNTIES

	Rates	Fringes
Laborers		
BUILDING CONSTRUCTION		
GROUP 1	$ 28.28	10.30
GROUP 2	$ 29.03	10.30
GROUP 3	$ 29.28	10.30

LABORER CLASSIFICATIONS (BUILDING CONSTRUCTION)

GROUP 1: Building and Construction Laborers; Scaffold Builders (other than for Mason or Plasterers); Ironworker Tenders; Mechanic Tenders; Rodmen and Chainmen, Railroad Workers, Masonry Wall Workers, (interior & exterior); Roofer Tenders, Cement Finisher Tenders, Carpenter Tenders, Portable Water, Pumps with discharge up to 3 inches; Waterproofing; Hauling of Creosote Lumber or Lutemen; Asphalt Rakers; Kettlem, Earth Compactors; Jackman and Sheetmen in Ditches more than 6 ft. deep; Laborers in ditches 6' deep or deeper; Assembly of Uncrete Pump; Tile Layers (sewer or field); Sewer Pipe Layers; Motor driven Wheelbarrows and Concrete Buggies; Hyster Operator; Pump Crete Assemblers; Core Drill Operator; Cement, Line or Silica Clay Handers; Handling of Toxic Materials damaging to clothing; Pneumatic Spikers; Deck Engine and Winch Operator; Water Main and Cable Ducking; Screed Man or Screw Operator on Asphalt Paver; Chain Saw and Demolition Saw Operator; Concrete Conveyor Assembler.

GROUP 2: Plaster Tenders, Masons Tenders; Mortar Mixers; Welders (acetylene or electric); Cutting Torch or Burner; Cement Nozzle; Cement Gun; Scaffold Builders when working for Plasterers, and Mason; Water Blast Machine Operator; Air Tool Operators and all Pheumatic Tool Operators; Air and Electric Vibrators and Chipping Hammer Operators; Asbestos Removal; Hazardous Waste Removal

GROUP 3: Dynamite Men; Drillers, Air Track or Wagon Drilling for explosives; Laborer Specialist

---

LABO0645-001 06/01/2007

BUILDING CONSTRUCTION:

ST JOSEPH COUNTY:

	Rates	Fringes
Laborers:		
GROUP 1	$ 19.58	8.80
GROUP 2	$ 19.78	8.80
GROUP 3	$ 20.08	8.80
GROUP 4	$ 20.58	8.80

BUILDING CONSTRUCTION

GROUP 1: Building and Construction Laborers; Scaffold Builders (other than for Plasterers); Ironworker Tenders; Mechanic Tenders; Window Washers and cleaners; Waterboys and Toolhousemen; Roofers Tenders; Railroad Workers; Masonry Wall Washers (interior and exterior); Cement Finisher Tenders; Carpenter Tenders; All Portable Water pumps with discharge up to (3) inches; Plaster Tenders;

Mason Tenders; Flag & Signal Person.

GROUP 2: Waterproofing; Handling of Creosot Lumber or like treated material (excluding railroad material);Asphalt Rakers and Lutemen; Kettlemen; Air Tool Operators and all Pneumatic Tool Operators; Air and Electric Vibrators and Chipping Hammer Operators; Earth Compactors Jackmen and Sheetmen working Ditches deeper than (6) ft.in depth; Laborers working in ditches (6) ft.in depth or deeper; Assembly of Unicrete Pump; Tile Layers (sewer or field) and Sewer Pipe Layer (metallic or non-metallic); Motor driven Wheelbarrows and Concrete Buggies; Hyster Operators; Pump Crete Assemblers; Core Drill Operators; Cement, Lime or Silica Clay Handlers (bulk or bag); Handling of Toxic Materials damaging to clothing; Pneumatic Spikers; Deck Engine and Winch Operators; Water Main and Cable Ducking (metallic and non-metallic); Screed Man or Screw Operator on Asphalt Paver; Chain and Demolition Saw Operators; Concrete Conveyor Assemblers.

GROUP 3: Water Blast Machine Operator; Mortar Mixers; Welders (Acetylene or electric); Cutting Torch or Burner; Cement Nozzle. Laborers; Cement Gun Operator; Scaffold Builders when Working for Plasterers.

GROUP 4: Dynamite Men; Drillers - Air Track or Wagon Drilling for explosives Hazardous and Toxic material handler, asbestos removal or handler.

LABO0645-002 04/01/2007

(UTILITY CONSTRUCTION)

ST JOSEPH COUNTY

	Rates	Fringes
Laborers:		
GROUP 1:.....	$ 20.22	8.90
GROUP 2:.....	$ 20.52	8.90
GROUP 3:.....	$ 21.22	8.90

LABORER CLASSIFICATIONS (UTILITY CONSTRUCTION)

GROUP 1: Construction laborer; Fence erector; Flagger; Grade checker; Guard rail erector; Wire mesh layer; Joint man (mortar, mastic and all other types); Lighting installer (permanent or temporary); Lineman for automatic grade maker on paving machines; Mortar man; Multi-plateerector; Rip-rap installer (all products and materials); Road markin and delineation laborer; Setting and placing of all precast concrete products; Sign installation including supporting structure; Spraying of all epoxy, curing compound, or like material; sod layer; Air tool, power tool, and power equipment operator; Asphalt lute man; Asphalt raker man; Batch truck dumper; Bridge handrail erector; Handler (bulk

or bag cement); Chain saw man; concrete puddler; concrete rubber; Concrete saw operator; Core drill operator, eye level; Hand blade operator; Hydro seeder man; Motor-driven Georgia buggy operator; Power-driven cmpactor or tamper operator; Power saw operator; Pumpcrete assembly man; Screed man or screw man or asphalt paver; Rebar installer; Sandblaster man; Sealer applicator for asphalt (toxic); Setting and placing prestressed or precast concrete structural members; Side rail setter (for sidewalks, side ditches, radii, and pavements); Spreader box tender (manual or power-driven); Straw blower man; Subsurface drain and culvert pipe layer; Transverse and longitudinal hand bull float man; Concrete conveyor assembly man; Horizontal boring and jacking man; Jackman and sheetman; Pipe grade man; winch and windlass operator

GROUP 2: Cutting torch burner; Laser beam aligner; Manhole erector; Sewer pipe layer; Water line installer, temporary or permanent; Welder (electric or exy-acetylene) in connection with waterline and sewer work, Hod Carrier (tending bricklayers); TVing and associated grouting of utility lines.

GROUP 3: Air track and wage drillman; Concrete barrier rail form setter; Dynamite and powder man; General leadman; Concrete Finisher; Transverse and Longitudinal hand Bullfloat man; Concrete Saw Joint Cutting

---

LABO0645-004 04/01/2007

ST. JOSEPH COUNTY

	Rates	Fringes
Laborers		
HEAVY AND HIGHWAY CONSTRUCTION		
GROUP 1	$ 20.02	8.90
GROUP 2	$ 20.32	8.90
GROUP 3	$ 21.22	8.90

LABORER CLASSIFICATIONS (HEAVY AND HIGHWAY CONSTRUCTION)

GROUP 1: Construction laborer; Fence erector; Flagger; Grade checker; Guard rail erector; Wire mesh layer; Joint man (mortar, mastic and all other types); Lighting installer (permanent or temporary); Lineman for automatic grade maker on paving machines; Mortar man; Multi-plateerector; Rip-rap installer (all products and materials); Road markin and delineation laborer; Setting and placing of all precast concrete products; Sign installation including supporting structure; Spraying of all epoxy, curing compound, or like material; sod layer; Air tool, power tool, and power equipment operator; Asphalt lute man; Asphalt raker man; Batch truck dumper; Bridge handrail erector; Handler (bulk or bag cement); Chain saw man; concrete puddler; concrete

rubber; Concrete saw operator; Core drill operator, eye level; Hand blade operator; Hydro seeder man; Motor-driven Georgia buggy operator; Power-driven cmpactor or tamper operator; Power saw operator; Pumpcrete assembly man; Screed man or screw man or asphalt paver; Rebar installer; Sandblaster man; Sealer applicator for asphalt (toxic); Setting and placing prestressed or precast concrete structural members; Side rail setter (for sidewalks, side ditches, radii, and pavements); Spreader box tender (manual or power-driven); Straw blower man; Subsurface drain and culvert pipe layer; Transverse and longitudinal hand bull float man; Concrete conveyor assembly man; Horizontal boring and jacking man; Jackman and sheetman; Pipe grade man; winch and windlass operator

GROUP 2: Cutting torch burner; Laser beam aligner; Manhole erector; Sewer pipe layer; Water line installer, temporary or permanent; Welder (electric or exy-acetylene) in connection with waterline and sewer work, Hod Carrier (tending bricklayers); TVing and associated grouting of utility lines.

GROUP 3: Air track and wage drillman; Concrete barrier rail form setter; Dynamite and powder man; General leadman; Concrete Finisher; Transverse and Longitudinal hand Bullfloat man; Concrete Saw Joint Cutting

---

* PAIN0027-004 06/01/2007

LAKE COUNTY, West of Highway #41, including HAMMOND area

	Rates	Fringes
GLAZIER	$ 35.00	18.78

PAIN0091-004 06/01/2007

LA PORTE (Everything East of Hwy 39 and North of Hwy 20, including the Cities of LaPorte and Michigan City); ST. JOSEPH COUNTIES

	Rates	Fringes
Painters:		
Brush & Roller, Drywall Taping & Finishing, Vinyl/Paper Hanging	$ 23.03	9.30
Spray	$ 23.53	9.30

PAIN0460-003 06/01/2007

PORTER, LAKE and the remainder of LA PORTE COUNTY)

	Rates	Fringes

Painters:
DRYWALL FINISHING.....$ 29.24 13.58
PAINTER.....$ 28.44 14.58

---

* PAIN1165-005 07/01/2007

LAKE (EAST OF HIGHWAY #41 EXCLUDING HAMMOND AREA), LAPORTE and PORTER COUNTIES

	Rates	Fringes
GLAZIER	$ 30.02	12.75

---

* PAIN1165-009 07/01/2007

ST. JOSEPH

	Rates	Fringes
GLAZIER	$ 24.14	10.10

PLAS0101-006 01/01/2006

HEAVY/HIGHWAY

ST. JOSEPH COUNTY

	Rates	Fringes
CEMENT MASON/CONCRETE FINISHER	$ 25.41	8.95

PLAS0101-007 06/01/2006

BUILDING CONSTRUCTION

ST. JOSEPH COUNTY

	Rates	Fringes
CEMENT MASON/CONCRETE FINISHER	$ 23.19	9.75
PLASTERER	$ 23.46	10.55

10.55

PLAS0165-001 07/01/2006

LAKE COUNTY (EXCEPT BY THE NORTHEAST SECTION LYING NORTH OF CROWN POINT AND EAST OF GRIFFITH)

	Rates	Fringes
CEMENT MASON/CONCRETE FINISHER		
BUILDING CONSTRUCTION	$ 32.53	13.82
HEAVY & HIGHWAY		

CONSTRUCTION.....$ 28.23 11.07
PLASTERER
BUILDING CONSTRUCTION.....$ 28.78 12.35

PLAS0406-001 07/01/2007

LAKE COUNTY (NORTHWARD ON LAKE COUNTY LINE TO AND INCLUDING THE CITY OF MERRILLVILLE, BUT NOT THE CITY LIMITS OF CROWN POINT), PORTER COUNTY

	Rates	Fringes
CEMENT MASON/CONCRETE FINISHER		
BUILDING CONSTRUCTION	$ 31.25	15.09
HEAVY & HIGHWAY CONSTRUCTION	$ 27.69	11.61
PLASTERER		
BUILDING CONSTRUCTION	$ 30.23	12.40

PLAS0438-001 06/01/2007

LAPORTE COUNTY, EASTERN PORTION OF PORTER COUNTY WEST TO BUT NOT INCLUDING CHESTERTON IN THE NORTH AND WEST TO AND INCLUDING KOUTS IN THE SOUTH

	Rates	Fringes
CEMENT MASON/CONCRETE FINISHER		
BUILDING CONSTRUCTION		
Cement Mason	$ 31.93	16.60
HEAVY & HIGHWAY CONSTRUCTION		
Cement Mason	$ 27.52	11.47

PLUM0172-006 06/04/2007

LA PORTE COUNTY (CITY OF LAPORTE) AND ST. JOSEPH COUNTY

	Rates	Fringes
Plumber, Pipefitter, Steamfitter	$ 28.35	12.16

PLUM0210-001 06/01/2007

LAKE, LAPORTE (Excluding the City of LaPorte) and PORTER COUNTIES

	Rates	Fringes
PLUMBER	$ 33.26	14.75

PLUM0597-003 06/01/2007

LAKE (Entire County), LA PORTE (Excluding the city of La Porte), PORTER (Entire County)

	Rates	Fringes
PIPEFITTER	$ 40.00	17.33

ROOF0023-006 01/01/2007

LA PORTE AND ST. JOSEPH COUNTIES

	Rates	Fringes
Roofers:		
COMPOSITION	$ 24.95	8.90
SLATE & TILE	$ 25.45	8.90

ROOF0026-003 06/01/2007

LAKE AND PORTER COUNTIES

	Rates	Fringes
ROOFER, Including Built Up, Composition and Single Ply	$ 30.66	13.62

SFIN0281-001 06/01/2007

PORTER COUNTY (North of U.S. Route 30)

	Rates	Fringes
Sprinkler Fitters	$ 40.50	15.80

SFIN0669-001 04/01/2006

LAKE AND PORTER COUNTIES

	Rates	Fringes
SPRINKLER FITTER	$ 31.29	11.40

SFIN0669-002 04/01/2006

	Rates	Fringes
SPRINKLER FITTER	$ 31.29	11.40

SHEE0020-013 07/01/2007

ST. JOSEPH COUNTY

	Rates	Fringes

Sheet metal worker.....$ 27.50 14.99

---

* SHEE0020-015 07/01/2007

LAKE, LAPORTE AND PORTER COUNTY

	Rates	Fringes
Sheet metal worker	$ 32.73	15.35

TEAM0142-002 06/01/2006

	Rates	Fringes
Truck drivers: (BUILDING CONSTRUCTION ONLY)		
LAPORTE COUNTY		
GROUP 1	$ 14.00	A
GROUP 2	$ 14.10	A
GROUP 3	$ 14.25	A
GROUP 4	$ 14.45	A
Truck drivers: (BUILDING, HEAVY AND HIGHWAY CONSTRUCTION (INCLUDING ASPHALT PAVING WORK))		
LAKE AND PORTER COUNTIES		
GROUP 1	$ 28.85	10.57
GROUP 2	$ 29.05	10.57
GROUP 3	$ 29.25	10.57
GROUP 4	$ 29.45	10.57
GROUP 5	$ 29.80	10.57
GROUP 6	$ 31.10	10.57

FOOTNOTE: A. $123.50 PER WEEK. PER EMPLOYEE

(BUILDING CONSTRUCTION ONLY)
LAPORTE COUNTY

GROUP 1: 4 Wheel and sheet metal trucks
GROUP 2: 6 Wheel and semi trucks
GROUP 3: Winch Trucks
GROUP 4: Mechanics

BUILDING, HEAVY & HIGHWAY AND ASPHALT PAVING
LAKE AND PORTER COUNTIES

GROUP 1: 2 and 3 Axle
GROUP 2: 4 Axle
GROUP 3: 5 Axle
GROUP 4: 6 Axle
GROUP 5: Over 6 Axles
GROUP 6: Articulated Dumps

TEAM0364-004 06/01/2005

	Rates	Fringes

Truck drivers:

BUILDING CONSTRUCTION (St. Joesph County)

GROUP 1	$ 19.33	a+b
GROUP 2	$ 19.54	a+b
GROUP 3	$ 19.62	a+b
GROUP 4	$ 19.67	a+b

HEAVY AND HIGHWAY CONSTRUCTION (LaPorte & St. Joesph Counties)

GROUP 1	$ 15.12	a
GROUP 2	$ 15.17	a
GROUP 3	$ 15.22	a
GROUP 4	$ 15.27	a
GROUP 5	$ 15.32	a
GROUP 6	$ 15.37	a
GROUP 7	$ 15.42	a
GROUP 8	$ 15.47	a
GROUP 9	$ 15.52	a
GROUP 10	$ 14.97	a
GROUP 11	$ 15.07	a

REMAINING COUNTIES

FOOTNOTE:

a. HEALTH & WELFARE: $237.40 per week for each employee.
PENSION: $37.00 per week for each employee.

b. HOLIDAYS: New Year's Day, Memorial Day, Fourth of July, Labor Day, Thanksgiving Day and Christmas Day.

TRUCK DRIVERS BUILDING CLASSIFICATIONS

GROUP 1: Pickup Trucks
GROUP 2: Single Axle Trucks
GROUP 3: Tandem, Triaxle and Fuel Trucks
GROUP 4: Semi Trailer Trucks

For the REMAINING COUNTIES:

FOOTNOTE: a. $162.30+.07 per week, per employee

TRUCK DRIVER HEAVY & HIGHWAY CLASSIFICATIONS

GROUP 1: Single axle straight trucks

GROUP 2: Single axle fuel and water trucks

GROUP 3: Single axle "dog-legs", and tandem truck or dog-legs; Drivers on batch trucks, wet or dry over 3 (34E) batches and tandem axle truck.

GROUP 4: Tandem axle fuel and Tandem axle water trucks; Drivers on Bituminous Distributors, Two-Man.

GROUP 5: Tandem trucks over 15 tons payload; Single axle semi trucks; Farm tractors hauling material; Mixer trucks (all types); trucks pulling tilt-top trailer single axle; single axle lowboys; truck mounted pavement breakers.

GROUP 6: Tandem trucks or "dog-legs"; Semi-water; Sprinkler; Heavy equipment-type water wagons, 5,000 gallons and under; Drivers on Bituminous Distributors, One-Man.

GROUP 7: Tri-axle trucks; tandem axle semi trucks; Equipment when not self-loaded or pusher loaded, such as Koehring or similar dumpsters, track trucks, Euclid bottom dump and hug bottom dump, tournatrailer, tournarockers, atley wagons, or similar equipment over 12cu. yds.; Mobile mixer trucks; trucks pulling tilt-top trailer tandem axle; Low-boys tandem axle; Tri- axle batch trucks and Tri-axle truck grease and maintenance truck for servicing equipment.

GROUP 8: Tandem-tandem semi trucks; truck mechanics and welders; Heavy equipment type water wagon over 5,000 gallons. Trucks pulling tilt-top trailer tri-axle; Low-boys tandem-tandem axle.

GROUP 9: Low-boys, tandem tri-axle; Acey wagons up to and including three (3) buckets.

GROUP 10: Pick-up trucks.

GROUP 11: Tenders; Greasers; Tire Men; Batch Board Tenders.

WELDERS - Receive rate prescribed for craft performing operation to which welding is incidental.

==========

Unlisted classifications needed for work not included within the scope of the classifications listed may be added after award only as provided in the labor standards contract clauses (29CFR 5.5 (a) (1) (ii)).

In the listing above, the "SU" designation means that rates listed under the identifier do not reflect collectively bargained wage and fringe benefit rates. Other designations indicate unions whose rates have been determined to be prevailing.

WAGE DETERMINATION APPEALS PROCESS

1.) Has there been an initial decision in the matter? This can be:

* an existing published wage determination
* a survey underlying a wage determination
* a Wage and Hour Division letter setting forth a position on a wage determination matter
* a conformance (additional classification and rate) ruling

On survey related matters, initial contact, including requests for summaries of surveys, should be with the Wage and Hour Regional Office for the area in which the survey was conducted because those Regional Offices have responsibility for the Davis-Bacon survey program. If the response from this initial contact is not satisfactory, then the process described in 2.) and 3.) should be followed.

With regard to any other matter not yet ripe for the formal process described here, initial contact should be with the Branch of Construction Wage Determinations. Write to:

Branch of Construction Wage Determinations
Wage and Hour Division
U.S. Department of Labor
200 Constitution Avenue, N.W.
Washington, DC 20210

2.) If the answer to the question in 1.) is yes, then an interested party (those affected by the action) can request review and reconsideration from the Wage and Hour Administrator (See 29 CFR Part 1.8 and 29 CFR Part 7). Write to:

Wage and Hour Administrator
U.S. Department of Labor
200 Constitution Avenue, N.W.
Washington, DC 20210

The request should be accompanied by a full statement of the interested party's position and by any information (wage payment data, project description, area practice material, etc.) that the requestor considers relevant to the issue.

3.) If the decision of the Administrator is not favorable, an interested party may appeal directly to the Administrative Review Board (formerly the Wage Appeals Board). Write to:

Administrative Review Board
U.S. Department of Labor
200 Constitution Avenue, N.W.
Washington, DC 20210

4.) All decisions by the Administrative Review Board are final.

==========

END OF GENERAL DECISION

used, a designation following the "G" designation identifies the office that will review the submittal for the Government. The following shall be submitted in accordance with Section 01 33 00 SUBMITTAL PROCEDURES:

SD-01 Preconstruction Submittals

Construction Schedule; G, CS

Condition of Existing Structures and Roads;G,CS

Coordination with Others; G, CS

Drug Free Workplace

Refer to FAR CLAUSE entitled DRUG FREE WORKPLACE in Section 00700.

SD-11 Closeout Submittals

As-Built Drawings; G, CS

Construction Documentation Report; G, DG

1.5 REAL ESTATE

All required right-of-way to do the work is available to the Contractor, and is included on the contract drawings. In the event the Contractor requires any additional access roads and storage areas, he shall obtain such areas at his own expense. The Contractor shall furnish to the Contracting Officer copies of all legal documents or leases permitting his use of private or other properties other than included in the contract.

1.6 AS-BUILT DRAWINGS

a. Working As-Built Drawings. The Contractor shall revise and maintain during the execution of the project two (2) sets of full-scale paper prints by red-line process to show the as-built conditions. These working as-built drawings shall be kept current and available for review on the jobsite at all times. Changes from the contract drawings that are made in the work or additional information that might be uncovered in the course of construction shall be accurately, legibly and neatly recorded and dated as they occur by means of details and notes. All variations from the contract drawings, for whatever reason, including those occasioned by modifications, optional material and the required coordination between trades, shall be indicated. These variations shall be shown in the same general detail that is utilized in the contract drawings. The working as-built drawings will be jointly reviewed for accuracy and completeness by the COR and the Contractor prior to submission of each monthly pay estimate. If the Contractor fails to maintain the working as-built drawings as specified herein, the COR shall deduct from the monthly progress payment an amount representing the estimated cost of maintaining the working as-built drawings. The working as-built drawings shall show the following information, but not be limited thereto:

1. The actual location, kinds and sizes of all sub-surface utility lines. In order that the location of these lines and appurtenances may be determined in the event the surface openings or indicators become covered over or obscured, the as-built drawings shall show, by offset dimensions to two permanently fixed surface features, the end of each run including each change in direction. Valves, splice boxes and

d. Cofferdam records
e. Wick drain lengths installed and settlement gauge readings
f. Field and laboratory compaction test results
g. Concrete mix proportions
h. Concrete strength test results
i. Pile driving equipment
j. Pile driving records
k. Quality Control Plan
l. Daily Construction Quality Control Management Reports and Checklists

1.7.2 Additional Requirements

Within 30 days of completion of the physical construction, the Contractor shall submit all documents requested for the CDR in Adobe Portable Document Format (*.pdf) on labeled CD-ROMs. All documents that fall into the same category, as referenced above, should be placed on the same CD. If multiple CDs are needed to complete the compilation, then each CD should be labeled with what type of document is included on the CD and also that it is 1 of 2, 2 of 2, etc. Also, the Contractor shall save the *.pdf files with the name of the document, as referenced above, in the filename (abbreviations are allowed), as well as the date. The Contractor shall submit two (2) copies of CDs for Government approval. Upon Government approval, the Contractor shall submit four (4) copies of the CDs and possibly one or more hard copies. If hard copies are requested, they should indicate what type of document is included and that it is binder 1 of 2, 2 of 2, etc. A sum of $5,000 will be retained until final approval of the CDR.

1.8 INSPECTION

The presence or absence of a QA representative shall not relieve the Contractor of responsibility for the proper execution of work in accordance with the plans and specifications.

1.9 CONDITION OF EXISTING STRUCTURES AND ROADS

Two (2) copies of the complete condition survey(s) shall be submitted to the Government for review and approval no later than 30 days after commencement of operations on the site. This process may be separated into clearly definable sections of work provided that the surveys are completed prior to the start of any work in that section. Prior to commencement of operations by the contractor at the site, a detailed survey will be made of all existing structures that may be affected by the contractor's operations. The survey will be conducted in coordination with local interests, contractor, Corps of Engineers Representative, and private parties concerned and will be sufficient in scope to provide advance agreement among all concerned as to the condition of the existing structures. The contractor shall be responsible for full and active participation in such pre-construction surveys of existing structures as deemed necessary to permit determination and accurate assessment of any subsequent damage to existing structures that may be incurred during the period of the contract.

1.10 PRESERVATION OF HISTORICAL, ARCHAEOLOGICAL AND CULTURAL RESOURCES

If, during construction activities, the Contractor observes items that might have historical or archaeological value, such observations shall be reported immediately to the Contracting Officer's Representative (COR) so

that the appropriate authorities may be notified and a determination can be made as to their significance and what, if any, special disposition of the finds should be made. The Contractor shall cease all activities that may result in the destruction of these resources and shall prevent his employees from trespassing on, removing, or otherwise damaging such resources.

1.11 MINIMUM AMOUNT OF INSURANCE REQUIRED

In accordance with FAR CLAUSE entitled INSURANCE - WORK IN A GOVERNMENT INSTALLATION, the following minimum insurance coverages and limits are required. The term "Installation" referred to in this clause is deemed to mean Corps of Engineers project site or Federal property.

a. Evidence of the following minimum insurance coverages and limits, with concurrent policy expiration dates, must be received by the Department of the Army, Corps of Engineers before the contractor can begin work. This evidence must be on a fully-completed, signed and dated ACCORD Certificate of Insurance. In addition, policy endorsements must be issued by or in behalf of the insuring company or companies naming the Department of the Army, Corps of Engineers as Additional Interest Insured regarding the work. The endorsements must also provide that the Department of the Army, Corps of Engineers receive direct written notice at least thirty (30) calendar days before the effective date of any material changes to, any cancellation of, or any non-renewal of these coverages during the time period of the contractor's work.

b. Should the coverages expire or be terminated during the time period of the contractor's work, the Department of the Army, Corps of Engineers must receive an ACCORD Certificate of Insurance as evidence of renewal or replacement insurance coverage and the supporting policy endorsements as specified above. The required evidence of renewal replacement insurance must be received by either the Contracting Officer or Contracting Officer's Representative at least ten (10) calendar days before the coverage expires or is being terminated.

c. All insuring companies must be rated A- or Excellent or better, by A.M. Best Company, an independent insurance rating service. The ACCORD Certificate must list the A.M. Best Company insurance company code of listed insurance companies being offered.

Comprehensive General Liability	
(Occurrence policy form only)	
General Aggregate	$2,000,000
Products/Completed Operations	$2,000,000
Each Occurrence	$1,000,000
Fire Damage Legal Liability	$ 50,000
Comprehensive Automobile Liability	
(Including Hired Automobile Liability	
and Non-Owned Automobile Liability)	
Combined Single Limit	$1,000,000
Employers' Liability	
Each Occurrence	$ 500,000
Policy Limit	$ 500,000
Each Employee	$ 500,000

Workers Compensation
(As required by state law or Federal law)

Umbrella Liability
(Occurrence policy form only)
Each Occurrence and Aggregate $5,000,000

d. Prior to commencement of work hereunder, the Contractor shall furnish to the Contracting Officer a certificate or written statement of the above required insurance. The policies evidencing required insurance shall contain an endorsement to the effect that cancellation or any material change in the policies adversely affecting the interests of the Government in such insurance shall not be effective for such period as may be prescribed by the laws of the State in which contract is to be performed and in no event less than thirty (30) calendar days after written notice thereof to the Contracting Officer.

1.12 TIME EXTENSIONS FOR UNUSUALLY SEVERE WEATHER

This clause specifies the procedure for the determination of time extensions for unusually severe weather in accordance with the CONTRACT CLAUSE entitled "DEFAULT (FIXED PRICE CONSTRUCTION)." In order for the Contracting Officer to award a time extension under this clause, the weather experienced at the project site during the contract period must be found to be unusually severe, that is, more severe than the adverse weather anticipated for the project location during any given month.

The following schedule of monthly anticipated adverse weather delays is based on National Oceanic and Atmospheric Administration (NOAA) or similar data for the project location and will constitute the base line for monthly weather time evaluations. The Contractor's progress schedule must reflect these anticipated adverse weather delays in all weather dependent activities.

MONTHLY ANTICIPATED ADVERSE WEATHER DELAY
WORK DAYS BASED ON A FIVE (5) DAY WORK WEEK

JAN	FEB	MAR	APR	MAY	JUN	JUL
22	20	21	7	4	3	3

AUG	SEP	OCT	NOV	DEC 1-15	DEC 16-31
5	3	5	7	4	12

Upon acknowledgement of Notice to Proceed (NTP) and continuing throughout the contract, the Contractor shall record on the daily CQC report, the occurrence of adverse weather and resultant impact to normally scheduled work. Actual adverse weather delay days must prevent work on critical activities for 50 percent or more of the Contractor's scheduled workday.

The number of actual adverse weather delay days shall include days impacted by actual adverse weather (even if adverse weather occurred in previous month), be calculated chronologically from the first to the last day of each month, and be recorded as full days. If the number of actual adverse weather delays exceeds the number of days anticipated in paragraph 2, above, the Contracting Officer will convert any qualifying delays to calendar days, giving full consideration for equivalent fair weather work days, and issue a modification in accordance with the contract clause

entitled "Default (Fixed Price Construction)".

1.13 PERMITS AND RESPONSIBILITIES

It shall be the responsibility of the Contractor to obtain all permits/licenses required for this project as required under CONTRACT CLAUSES paragraph entitled "PERMITS AND RESPONSIBILITIES".

1.14 COORDINATION WITH OTHERS

The Contractor shall schedule and coordinate its operations affecting other Contractors, Government hired labor forces, utilities, and/or property within the work limits. Such scheduling shall be accomplished with lead time sufficient for coordination of all involved parties as necessary for timely completion of each contract feature. As evidence of this compliance with this General Provision, the Contractor shall furnish the Contracting Officer's Representative (COR) with a copy of each coordinated schedule prior to commencing operations affecting such other Contractors, utilities, and/or property.

1.14.1 GENERAL CONSTRUCTION REQUIREMENTS

Some of the utility owners and rail road provided general construction requirements for working around their utility and rail-road lines. These requirements are provided in Attachment 1. The attachment contains the list of requirements submitted by BP Pipelines at the time of submittal. It was provided to the other utility owners for review and comment. There were no objections to the contents and no additional requirements were requested to be added.

The construction requirements may not be all inclusive and are subject to change. The attachment does not negate the Contractors reasonability to coordinate with all impacted utility and rail-road owners.

1.15 SPECIAL SAFETY REQUIREMENTS

The Contractor shall comply with all applicable Federal, state and local safety requirements including, but not limited to, those provided in EM 385-1-1.

1.16 ONE CALL SYSTEMS FOR EXCAVATORS

One call systems, established by law, are operated by owners of underground facilities for excavators. Upon notification by an excavator through a one call system, all participating operators of underground facilities in a covered area will identify and locate their facilities. One call systems will be identified by contacting the following:

INDIANA
INDIANA UTILITY CHECK
1-800-382-5544

1.17 ELECTRICAL POWER LINES

The Contractor shall study the construction plans and site and know in detail all locations of power lines within the rights of way. Prior to performing any construction operation adjacent to power lines, appropriate danger signs shall be provided where any equipment scheduled for use on the site is capable of contacting such lines. To confirm the location of

underground lines, the Contractor shall contact the appropriate council listed in paragraph ONE CALL SYSTEMS FOR EXCAVATORS. Aerial power lines shall either be shut off and a positive means taken to prevent the lines from being energized, or clearances required by EM 385-1-1, Safety and Health Requirements Manual, shall be maintained. Work shall not proceed into dangerous areas without an additional workman being assigned the crew to watch the movements of other personnel and equipment to assure that designated clearances are maintained.

1.18 BORROW/DISPOSAL SITES AND QUARRIES

a. Definitions. For purposes of this general provision, the following definitions apply:

(1) Government-Suggested borrow/disposal site or quarry means a site or quarry suggested by the Government for use by the Contractor concerning which all applicable Federal, state and local environmental statutory and regulatory requirements may or may not have been satisfied.

(2) Commercial/existing borrow/disposal site or quarry means a site or quarry which is either in the business of providing borrow material or has been used as a disposal site for other purposes and is available for use; and concerning which all applicable Federal, state and local environmental statutory and regulatory requirements have been satisfied.

(3) Contractor-chosen borrow/disposal site or quarry means a site or quarry chosen by the Contractor for use concerning which none or not all of the applicable Federal, state and local environmental statutory and regulatory requirements have been satisfied.

b. If a borrow/disposal site or quarry is identified in the contract specifications as Government-Suggested, it is the responsibility of the Contractor to ascertain whether or not all Federal, state and local environmental statutory and regulatory requirements have been satisfied. If any of such requirements have not been satisfied, the Contractor is required to follow the procedures set forth in paragraph d(4) below. Use of such a site or quarry must be approved by the Contracting Officer.

c. If the Contractor chooses a commercial/existing borrow/disposal site or quarry, the Contractor is not required to ensure that all applicable Federal, state and local environmental statutory and regulatory requirements have been satisfied, but is required to provide to the Government either, as a minimum, a letter from the owner/operator of the commercial/existing borrow/disposal site or quarry certifying that all environmental and operating permits have been acquired, or actual copies of all such environmental and operating permits. Use of such a site or quarry must be approved by the Contracting Officer. The Contractor shall adhere to all rules, regulations and business practices required by the owner/operator.

d. If a Contractor decides to use a Contractor-chosen borrow/disposal site or quarry, it is the Contractor's responsibility to ensure that all applicable Federal, state and local environmental statutory and regulatory requirements have been satisfied. Use of such a site or quarry must be approved by the Contracting Officer before any material

is brought to the site, and such approval shall not be granted unless all applicable requirements have been met and such use of the site does not pose significant environmental impacts.

(1) The specific requirements which must be met by the Contractor before a Contractor-chosen (or, when applicable, a Government-recommended) site or quarry shall be approved by the COR include, at a minimum, but are not necessarily limited to, compliance with the following environmental laws, regulations and executive orders:

Federal Laws, Regulations, and Executive Orders

Name	Agency
Section 404, Clean Water Act (Permit)	U.S. Army Corps of Engineers, Detroit District (IN/WI) Chicago District (IL)
Section 10, River and Harbor Act of 1899 (Permit)	U.S. Army Corps of Engineers
Emission Limitations, Clean Air Act	U.S. Environmental Protection Agency
Section 9, Endangered Species Act of 1973	U.S. Fish and Wildlife Service, Barrington Office (IL) Bloomington Office (IN) Green Bay Office (WI)
Section 703, Migratory Bird Treaty Act of 1918	U.S. Fish and Wildlife Service
Section 106, National Historic Preservation Act of 1966	Indiana Department of Natural Resources, Division of Historic Preservation (IN)
Flood Plain Management, Executive Order 11988	U.S. Army Corps of Engineers, Chicago District
Surface Mining Control and Reclamation Act of 1977	Bureau of Mines
Resource Conservation and Recovery Act of 1976	U.S. Environmental Protection Agency
Toxic Substance Control Act	U.S. Environmental Protection Agency

Indiana State Statutes

Construction Within a Floodway (Permit)	Indiana Department of Natural Natural Resources, Division of Water

Section 401, Clean Water Act (Waiver of Permit)	Indiana Department of Environmental Management
Section 402, Clean Water Act (NPDES Permit)	Indiana Department of Environmental Management

It is the Contractor's responsibility to ensure that all applicable Federal, state and local environmental statutory and regulatory requirements are satisfied, regardless of their presence on, or absence from, the above list.

(2) It is the responsibility of the Government to ensure that the requirements of the National Environmental Policy Act (NEPA) have been complied with. If the Contractor decides to use a site or quarry which has not previously undergone an environmental review under NEPA (either Government-recommended or Contractor-chosen), the Contractor shall notify the Contracting Officer, who shall arrange for such an environmental review. This review and compliance process may include inter-agency coordination and the preparation and circulation for public review of environmental documentation. It is the responsibility of the Contractor to allow sufficient time in the construction schedule to accommodate this review and compliance process, and to provide the Contracting Officer with any and all information that the Contracting Officer deems necessary to facilitate the process. The review and compliance process requires a minimum time frame of ninety (90) calendar days, but could take substantially longer, possibly up to one year or, in unusual circumstances, even longer than one year, to complete. Any construction delays caused by the need to conduct an environmental review under NEPA shall be solely the responsibility of the Contractor, at no additional cost to the Government.

(3) It is also the responsibility of the Government to perform Section 7 consultation under the Endangered Species Act, to coordinate with the U.S. Fish and Wildlife Service and appropriate state wildlife agencies under the Fish and Wildlife Coordination Act, and to perform a Farmland Conversion Impact Rating under the Farmland Protection Policy Act for all Government-Suggested or Contractor-Chosen sites. This shall be accomplished concurrently with the NEPA environmental review process. It is the responsibility of the Contractor to allow sufficient time in the construction schedule to accommodate these consultation and coordination requirements as well as the NEPA review process, and to provide the Contracting Officer with any and all information that the Contracting Officer deems necessary to facilitate the completion of these consultation and coordination requirements.

(4) The Government cannot guarantee that any Government-Suggested or Contractor-chosen site is capable of complying with all applicable Federal, state and local environmental statutory and regulatory requirements and may reject any such site proposed for use by the Contractor for environmental reasons. If the Contracting Officer does not approve the use of a Government-recommended or Contractor-chosen borrow/disposal site or quarry because not all applicable Federal, state or local environmental statutory and regulatory requirements have been

satisfied, or because the Government determines that such site or quarry could not be used for environmental reasons as a result of the environmental review under NEPA, it is the Contractor's responsibility to locate an alternate site or quarry and to perform all necessary reviews to obtain approval of the use of such alternative site or quarry. Any construction delays caused by the need to locate an alternate site or quarry, shall be solely the responsibility of the Contractor, at no additional cost to the Government.

(5) Nothing in this clause shall relieve the Contractor from the responsibility of obtaining all non-environmental permits and licenses which may be required under Federal, state or local statutes, regulations and ordinances.

1.19 TAX EXEMPTION

INDIANA SALES AND USE TAX

a. This contract is a construction contract which contains separate amounts applicable to the performance of the services and the furnishing of the materials as defined in State of Indiana, Department of Revenue Information Bulletin No. 60, dated Dec 2002. Notwithstanding any other provisions of this contract, the contract price does not include any amount for Indiana Sales and Use Tax on materials to be incorporated by the Contractor or Subcontractor into the structure or improvement to real estate. The Contractor or Subcontractor should provide his supplier with a State of Indiana General Exemption Certificate for Construction Contractors (Form ST-134) with respect to such property.

b. For the purpose of complying with the requirements of State of Indiana, Department of Revenue Information Bulletin No. 60, dated Dec 2002, the Contractor, pursuant to the requirements of the solicitation shall furnish prior to contract award a breakdown separating pricing (1) materials to be incorporated into the structure or improvement to real estate, (2) services and other obligations of the construction contract, and (3) the total contract price. This breakdown is for the sole purpose of complying with the requirements of State of Indiana, Department of Revenue Information Bulletin No. 60, dated Dec 2002 with regard to separate pricing of services and materials and has no other contractual significance.

c. Any subcontracts awarded hereunder shall also contain separate amounts applicable to the performance of services and the furnishing of the materials.

1.20 BARRICADES AND WARNING SIGNS

The Contractor shall provide and maintain barricades, danger and warning signs and suitable and efficient lights at all points of entry to the section or sections of roadway which are to be closed to public travel during construction operations under the contract. The Contractor shall also furnish flagmen and watchmen to warn and direct traffic or to prevent travel on any portion of roadways during the periods in which operations under the contract are performed as may be required to ensure safety and prevent accidents. All facilities furnished by the contractor under this paragraph shall be as prescribed by local highway authorities and shall be

subject to approval by the Contracting Officer. Traffic control shall be in accordance with the Indiana Manual on Uniform Traffic Control Devices. A copy of the plan shall be submitted to the Contracting Officer for approval. Separate payment shall not be made for any costs incurred by the contractor in compliance with the provisions of this paragraph but all costs therefore shall be considered as a subsidiary obligation of the Contractor and are included in the contract price for other contract items as applicable.

1.21 PROGRESS MEETINGS

A progress meeting will be held once every two weeks (biweekly), except that progress meetings shall be held weekly during periods where there is active construction on the railroad closures and in the utility corridors. The meetings shall be held on-site, in the contractor's field trailer, unless the Government elects to hold the meetings at an alternate off-site location. The day and time for conducting meetings will be mutually agreed to between the Contractor, the Government, the Local Sponsors and other participants as required, within 30 calendar days after receipt of the notice to proceed. The Contractor shall be a required to fully participate in the progress meeting.

Unless the Contracting Officer's Representative (COR) specifically indicates in writing otherwise, the Contractor shall prepare meeting agendas and meeting minutes for each meeting. The agenda and minutes shall be prepared in a format acceptable to the COR and shall contain all information required by the COR, including, but not limited to:

a. A listing of all meeting participants;

b. The financial progress, including original and current contract amounts, the amount paid to date, and original and current contract completion dates;

c. A list of work completed since the last meeting;

d. A list of work activities scheduled for the upcoming two weeks;

e. Critical work activities in the project schedule;

f. Old business, including summaries of the status of unresolved issues discussed at previous progress meetings;

g. New business, including summaries of issues that need to be addressed and have not been included in previous meeting minutes;

h. Potential items of interest to the public, local sponsor, or local community;

i. The status of submittals, including lists of outstanding submittals, key submittals in review, and upcoming submittals;

j. A listing of all field changes/modifications.

The progress meeting minutes shall be submitted to the Government and all other meeting participants for review and approval within seven days of the meeting. The review and approval process will allow for mutual acceptance of the minutes as written. As directed by the Government, the Contractor shall edit the minutes to add, delete, and/or correct items that were

covered in the weekly meeting. The edited meeting minutes shall then be resubmitted within 7 days of the receipt of the Government comments.

1.22 Contractor Performance Evaluations

It is the Corps' standard operating procedure that the Contracting Officer evaluate the contractor's performance and prepare a performance report using the web-based application CCASS (Construction Contractor Appraisal Support System) for construction contracts of $100,000 or more. After an evaluation (interim or final) is written up by the Corps, the contractor has a 30 day period to access, review and comment on the evaluation. Accessing and using the CCASS requires having specific software, called PKI certification, installed on the user's computer. The certification, a Department of Defense requirement, was implemented to provide security in electronic transactions. The certification software could cost approximately $100 - $115 per certificate per year and is purchased from an External Certificate Authorities (ECA) vendor. Current information about the PKI certification process and for contacting vendors can be found on the web site: http://www.cpars.navy.mil/. If the Contractor wishes to participate in the performance evaluation process, access to CCASS and PKI certification is the sole responsibility of the Contractor.

PART 2 PRODUCTS (Not Applicable)

PART 3 EXECUTION (Not Applicable)

-- End of Section --

with gatewells with and without headwalls as described in SECTION 33 49 33.00 03 SLUICE GATES AND FLAP GATES, SECTION 03 30 00.00 CONCRETE and SECTION 05 50 00.00 10 MISCELLANEOUS METALS. Payment constitutes full compensation for all labor, equipment, materials and incidentals including excavation, bedding, backfill, miscellaneous metal items, formwork, concrete and reinforcing.

1.1.14.2 Unit of Measure

Unit of measure: Lump Sum (LS)

1.1.15 HEADWALLS (Bid Item 0017AB, 0024AE, 0027AB, 0028AD and 0029AD)

1.1.15.1 Payment

Payment will be made at the contract lump sum price for the work associated with the Headwall Structures as described in SECTION 33 49 33.00 03 SLUICE GATES AND FLAP GATES and SECTION 03 30 00.00 CONCRETE. Payment constitutes full compensation for all labor, equipment, materials and incidentals including excavation, bedding, backfill, formwork, concrete and reinforcing.

1.1.15.2 Unit of Measure

Unit of measure: Lump Sum (LS)

1.1.16 HEAVY DUTY SLUICE GATES, FLAP GATES AND EQUIPMENT (Bid Item 0017AC, 0018AC, 0018AD, 0020AB, 0020AD, 0021AD, 0021AE, 0023AD, 0024AF, and 0024AG, 0026AE, 0026AF, 0027AC, 0028AE, 0029AE, 0040AD and 0040AE)

1.1.16.1 Payment

Payment at the contract lump sum price will be made for heavy-duty sluice gates, flap gates, portable electric operators and equipment as described in SECTION 33 49 33.00 03 SLUICE GATES AND FLAP GATES. Payment constitutes full compensation for all labor, delivery, equipment, materials, and incidentals associated with both sluice and flap gates.

1.1.16.2 Unit of Measure

Unit of Measure: Lump Sum (LS)

1.1.17 PRECAST DRAINAGE STRUCTURES (Bid Items 0010AH, 0017AA, 0019AA, 0019AD, 0020AC, 0021AF, 0023AG, 0024AD, 0026AD, 0027AA, 0028AC, 0029AC, and 0040AC)

1.1.17.1 Payment

Payment will be made at the contract lump sum price for installing the precast drainage structures as described in SECTION 33 40 00.00 STORM-DRAINAGE SYSTEM, and as shown on drawings, including excavation, bedding, backfilling, castings for the construction of the drainage structures, pipes, geotextile (described in SECTION 31 05 19.13 GEOTEXTILES USED AS FILTERS AND UNDERLAYS), connection to drainage piping and providing the manholes, catch basins, concrete collars, end sections, and trashracks. Payment constitutes full compensation for all labor, equipment, materials, and incidentals necessary to complete the work.

1.1.17.2 Unit of Measure

Unit of measure: Lump Sum (LS)

1.1.18 PRELOAD EMBANKMENT (Bid Item 0024AA, 0026AA, 0028AA, and 0029AA)

1.1.18.1 Payment

Payment will be made at the applicable contract lump sum price for the preload embankment as described in SECTION 31 00 00 EARTHWORK. The price shall be full compensation for excavating, loading, hauling, placing fill, granular drain material, filter fabric, and removal of this material, and for furnishing all labor, materials, equipment, tools, and incidentals necessary to complete the work.

1.1.18.2 Unit of Measure

Unit of measure: Lump Sum (LS)

1.1.19 CONTROL STRUCTURE (Bid Item 0014AD)

1.1.19.1 Payment

Payment will be made at the contract lump sum price for the work associated with control structure by Hart Ditch 6N, as shown on drawings. Payment constitutes full compensation for all labor, equipment, materials and incidentals including fabrication, delivery, formwork, excavating, concrete and reinforcing.

1.1.19.2 Unit of Measure

Unit of measure: Lump Sum (LS)

1.1.20 OUTFALL STRUCTURE (Bid Item 0023AA)

1.1.20.1 Payment

Payment will be made at the contract lump sum price for the work associated with outfall structure at Baring Ave I-Wall pump station 5S, as shown on drawings. Payment constitutes full compensation for all labor, equipment, materials and incidentals including fabrication, delivery, formwork, excavating, concrete and reinforcing.

1.1.20.2 Unit of Measure

Unit of measure: Lump Sum (LS)

1.1.21 NORTHCOTE SANDBAG CLOSURE (Bid Item 0031)

1.1.21.1 Payment

Payment will be made at the contract lump sum price for the work associated with closure structure, as shown on drawings. Payment constitutes full compensation for all labor, equipment, materials and incidentals including fabrication, delivery, formwork, excavating, concrete and reinforcing.

1.1.21.2 Unit of Measure

Unit of measure: Lump Sum (LS)

1.1.22 CONCRETE (Bid Item 0015AA, 0021AA, 0022AB, 0030AA, 0040AB, 0041AB, 0042AA and 0043AB)

1.1.22.1 Payment

Payment will be made at the contract lump sum price for delivery, furnish, placement, finish, and cure of concrete as described in SECTION 03 30 00.00 CONCRETE. Payment constitutes full compensation for all plant, labor, materials, equipment, tools, and incidentals necessary to complete the work.

1.1.22.2 Unit of Measure

Unit of measure: Lump Sum (LS)

1.1.23 NORTH RAIL ROAD CLOSURE STRUCTURE AND APPURTENANCES (Bid Item 0038AB) AND SOUTH RAIL ROAD CLOSURE STRUCTURE AND APPURTENANCES (Bid Item 0039AB)

1.1.23.1 Payment

Payment at the contract lump sum price will be made for heavy-duty steel slide gate closure structures. Payment constitutes full compensation for all labor, equipment, materials, and incidentals associated with the construction.

1.1.23.2 Unit of Measure

Unit of Measure: Lump Sum (LS)

1.1.24 PERFORMANCE AND PAYMENT BONDS (Bid Item 0033, 0034AH, 0035AG, 0038AC, 0039AC, 0040AF, 0041AC, 0042AD, and 0043AC)

1.1.24.1 Payment

Payment will be made at the contract lump sum price for the performance and payment bonds that are required as part of this contract. All costs associated with this item shall be included in the lump sum contract price.

1.1.24.2 Unit of Measure

Unit of measure: Lump Sum (LS)

1.1.25 TEMP SECURITY FENCE & GATES (Bid Item 0016AD)

1.1.25.1 Payment

Payment at the contract unit price will be made for installation, maintenance and removal of fencing, and gates within the fence as described in SECTION 32 31 13 CHAIN LINK FENCES AND GATES and indentified on the drawings. A combination of project safety fencing and chain link fencing shall be used as indentified on the plan and profile sheets. The areas that are primarly impacted are 5S West of Harts Ditch, 6N, and 6S. Payment constitutes full compensation for furnishing, installing, removing, and disposing of all materials used in the security fence and for providing all necessary labor, equipment, and other incidental items necessary to complete the work.

1.1.25.2 Unit of Measure

Unit of measure: Unit of measure: Lump Sum (LS)

1.1.26 REMOVE SEDIMENT, GRADING, AND PLACEMENT OF RIPRAP (Bid Item 0019AC)

1.1.26.1 Payment

Payment will be made at the contract lump sum price for removal and disposal of sediment, grading and placing riprap (at the existing 48" gatewell East of Indianapolis Boulevard) as described in SECTION 31 37 16.00 03 RIP-RAP FOR EROSION CONTROL. Payment constitutes full compensation for all labor, materials, equipment, tools, and incidentals necessary to complete the work. Including but not limited to excavation, grading and placement of riprap.

1.1.26.2 Unit of Measure

Unit of measure: Unit of measure: Lump Sum (LS)

1.1.27 RECREATION TRAIL SIGNAGE (Bid Item 0010AG)

1.1.27.1 Payment

Payment will be made at the contract lump sum price for furnishing and installing the recreation trail signs as shown on drawing R-08. Payment constitutes full compensation for all plant, labor, materials, equipment, tools, and incidentals necessary to complete the work.

1.1.27.2 Unit of Measure

Unit of measure: Lump Sum (LS)

1.2 UNIT PRICE PAYMENT ITEMS

Payment items for the work of this contract on which the contract unit price payments will be made are listed in the BIDDING SCHEDULE and described below. The unit price and payment made for each item listed shall constitute full compensation for furnishing all plant, labor, materials, and equipment, and performing any associated Contractor quality control, environmental protection, meeting safety requirements, tests and reports, and for performing all work required for each of the unit price items.

1.2.1 FRENCH DRAINS (Bid Item 0007)

1.3.1.1 Payment

Payment will be made at the contract unit price for the work associated with French Drains, as shown on drawings. Payment constitute full compensation for all plant, labor, excavation and backfill, and incidentals necessary to complete the work.

1.2.1.1 Measurement

Measurement will be based on the linear foot of french drains installed.

1.2.1.2 Unit of Measure

Unit of measure: Linear foot (LF)

1.2.2 VERTICAL PREFABRICATED WICK DRAINS (Bid Item 0024AB, 0026AB, 0028AB, and 0029AB)

1.2.2.1 Payment

Payment will be made at the contract unit price for the prefabricated vertical drainage wicks associated with the preloading embankment at the gatewell and culvert structures as described in SECTION 33 46 26.19 VERTICAL PREFABRICATED DRAINAGE WICKS. The unit price shall shall be for full compensation for the cost of furnishing the full length of drainage wick material; installing the drainage wick; and furnishing all tools, materials, labor, equipment, and all other costs necessary to complete the required work. No payment will be made for any excess lengths, additional wicks used for contractor convenience, unacceptable drainage wicks, or for any delays or expenses incurred through changes necessitated by the use of improper or unacceptable material or equipment.

1.2.2.2 Unit of Measure

Unit of measure: Linear Foot (LF)

1.2.3 STRIPPING TOP SOIL (Bid Item 0008AA)

1.2.3.1 Payment

Payment will be made at the contract unit price for stripping as described in SECTION 31 00 00 EARTHWORK, including excavating, loading, hauling, stockpiling, and placing of this material. Payment constitutes full compensation for all labor, materials, equipment, tools, and incidentals necessary to complete the work. No separate payment will be made for stripping outside of the limits indicated to be stripped.

1.2.3.2 Measurement

Stripping will be measured by the cubic yard. The quantity to be measured for payment shall be the actual number of square yards of material stripped to the depth specified within the limits of construction designated on the plans and typical sections, or as directed by the Contracting Officer. The Contractor shall perform original and final surveys for the purpose of measuring quantities for payment. The Contractor shall notify the Contracting Officer's representative sufficiently in advance of the start of the stripping operation and upon completion of the stripping operation to afford sufficient time during which to be present for the surveys. The contractor shall have the surveys performed by an independent licensed surveyor. The original ground survey, final post-stripping quantity survey and quantity calculations for each clearly definable section of work shall be submitted to the Government within 20 calendar days of completion of the stripping operations in said section. Unless otherwise approved, pay estimate unit quantities for stripping will be capped at 80% of the bid item quantity until the complete final quantity survey and quantity calculations have been submitted and approved.

1.2.3.3 Unit of Measure

Unit of measure: Cubic Yard (CY)

1.2.4 IMPERVIOUS AND SATISFACTORY FILL (Bid Item 0008AB and 0008AC)

1.2.4.1 Payment

Payment will be made at the contract unit price for fill placed as described in SECTION 31 00 00 EARTHWORK, including excavating, loading, hauling, placing and compacting of this material and excavation for inspection trenches. No separate payment will be made for inspection trenches. Inspection trenches will be incidental to impervious and satisfactory fill operations. Payment constitutes full compensation for furnishing all labor, materials, equipment, tools, and incidentals necessary to complete the work. Inspection trench excavating and backfilling will be incidental to this pay item.

1.2.4.2 Measurement

Impervious and satisfactory fill used for the embankment construction will be measured for payment by the cubic yard, in-place. Quantities shall be determined by the average end area method every 100 feet, or as directed by the Contracting Officer. Pre-placement surveys shall be taken after the necessary stripping, excavation, and other preparation of the area has been performed. The Contractor shall notify the Contracting Officer's representative sufficiently in advance of the start of the placing operation to afford sufficient time during which to be present for the necessary original measurements. The final quantity survey and quantity calculations for impervious and satisfactory levee fill shall be submitted for approval within 20 calendar days after completion of levee filling operations for each clearly definable section of work. Interim pay requests for levee fill quantities can be estimated using truck count method or any other gross quantity estimating process approved by the Government. Unless otherwise approved, pay estimate unit quantities for levee fill will be capped at 80% of the bid item quantity until the complete final quantity survey and quantity calculations have been submitted and approved.

Upon completion of the placement operation, the Contractor will notify the Contracting Officer's representative that final surveys will be performed. The contractor shall have the surveys performed by an independent licensed surveyor. The Contractor should note that subsurface soils may be compressible, and shrinkage and settlement may occur during construction. No additional volume of impervious or satisfactory fill shall be added to the survey quantity to account for settlement or shrinkage, but shall be incidental to the levee construction. The quantity of impervious and satisfactory fill computed in the aforementioned paragraphs shall constitute the total measurement quantity for payment. No other method or means of determining quantities of placed impervious and satisfactory fill materials will be considered. Inspection trench excavating and backfilling will not be measured for payment.

1.2.4.3 Unit of Measure

Unit of measure: Cubic Yard (CY)

1.2.5 DITCH EXCAVATION (Bid Item 0008AD)

1.2.5.1 Payment

Ditch excavation will be paid for at the contract unit price per cubic yard

as described in SECTION 31 00 00 EARTHWORK. Only two ditches are considered for this pay item: 5S-D2 and 6N-D3, all other ditch excavation is considered in spoil bank excavation. The price shall be full compensation for all plant, labor, equipment, and materials required to perform the work necessary to achieve the lines, grades, and elevations of the new ditch as shown. This shall also include the stockpiling of material from the excavation as necessary. Unless otherwise approved, pay estimate unit price quantities will be capped at 80% of the bid item quantity until the final quantity survey and calculations have been submitted and approved.

1.2.5.2 Unit of Measure

Unit of Measure: Cubic Yard (CY)

1.2.6 EXISTING SPOIL BANK EXCAVATION (Bid Item 0008AE)

1.2.6.1 Payment

Payment will be made at the contract unit price for excavation of the existing spoil banks as indicated on the drawings to the top of the inspection trench, (not including the inspection trench excavation) as described in SECTION 31 00 00 EARTHWORK, including excavating, loading, hauling, stockpiling and/or disposal of this material. Payment constitutes full compensation for all labor, materials, equipment, tools, and incidentals necessary to complete the work.

1.2.6.2 Measurement

Excavation will be measured for payment by the cubic yard and shall include the existing spoil bank breach excavations as indicated. Quantities shall be determined by the average end area method every 100 feet, or as directed by the Contracting Officer. The Contractor shall perform original and final surveys for the purpose of measuring quantities for payment. The Contractor shall notify the Contracting Officer's representative sufficiently in advance of the start of the excavtion operation and upon completion of the excavation operation to afford sufficient time during which to be present for the surveys. The surveys shall be performed by an independent licensed surveyor. Excavation of the borrow material will not be measured for separate payment. The original ground survey, final quantity survey and quantity calculations for excavation of the existing spoil bank shall be submitted for approval within 20 calendar days after completion of excavation for each clearly definable section of work. Interim pay requests for these unit price quantities can be estimated using truck count method or any other gross quantity estimating process approved by the Government. Unless otherwise approved, pay estimate unit quantities for existing spoil bank excavation will be capped at 80% of the bid item quantity until the complete final quantity survey and quantity calculations have been submitted and approved.

1.2.6.3 Unit of Measure

Unit of measure: Cubic Yard (CY)

1.2.7 SEEDING (Bid Item 0009AA)

1.2.7.1 Payment

Payment will be made at the contract unit price for seeding as described in

SECTION 32 92 19.13 TURF, including excavating, loading, hauling, and placing of this material. Payment constitutes full compensation for all labor, materials, equipment, tools, and incidentals necessary to complete the work.

1.2.7.2 Measurement

The seeding will be measured for payment in acres of seed, completed and accepted. Unless otherwise approved, pay estimate unit quantities for seeding will be capped at 50% of the bid item quantity until it has been determined that the turf has met all establishment requirements and the final quantity survey and quantity calculations have been submitted and approved.

1.2.7.3 Unit of Measuree

Unit of measure: Acre (AC)

1.2.8 TOPSOIL (Bid Item 0009AB)

1.2.8.1 Payment

Payment will be made at the contract unit price for topsoil as described in SECTION 31 00 00 EARTHWORK, including excavating, loading, hauling, and placing of this material. Payment constitutes full compensation for all labor, materials, equipment, tools, and incidentals necessary to complete the work.

1.2.8.2 Measurement

Topsoil will be measured by the cubic yard. The material will be measured in its final position by the average end area method every 100 feet. The Contractor shall perform original and final surveys for the purpose of measuring quantities for payment. The Contractor shall notify the Contracting Officer's representative sufficiently in advance of the start of the topsoil operation and upon completion of the topsoil operation to afford sufficient time during which to be present for the surveys. The surveys shall be performed by an independent licensed surveyor. Topsoil stripping and stockpiling at the borrow site will not be measured for payment and costs associated with the operations shall be considered incidental to the borrow site development. The final quantity survey and quantity calculations for topsoil shall be submitted for approval within 20 calendar days after completion of topsoil operations for each clearly definable section of work. Interim pay requests for topsoil quantities can be estimated using truck count method or any other gross quantity estimating process approved by the Government. Unless otherwise approved, pay estimate unit quantities for topsoil will be capped at 80% of the bid item quantity until the complete final quantity survey and quantity calculations have been submitted and approved.

1.2.8.3 Unit of Measure

Unit of measure: Cubic Yard (CY)

1.2.9 RIPRAP CLASS 2 GRADATION - NORTH BANK AT HART DITCH (Bid Item 0006AA, 0006AB, and 0006AC)

1.2.9.1 Payment

Payment will be made at the contract price for placing riprap as described in SECTION 31 37 16.00 03 RIP-RAP FOR EROSION CONTROL. Payment constitutes full compensation for all labor, materials, equipment, tools, and incidentals necessary to complete the work, including but not limited to grading as indicated in the drawings, placement of RipRap, Bedding Stone, and Geotextile Fabric (described in SECTION 31 05 19.13 GEOTEXTILES USED AS FILTERS AND UNDERLAYS). Deductions: All stone permitted by the Contracting Officer to remain outside the tolerances required will be deducted from the quantity to be paid for. Volume of excess stone will be computed, using the average end area of excess above the tolerance line. The excess volume will be deducted from the payment quantity at a rate of 135 pounds per cubic foot regardless of actual weight per cubic foot.

1.2.9.2 Unit of Measure

Unit of Measure: Tons (TN)

1.2.10 BITUMINOUS SURFACE and BINDER COURSE (Bid Items 0010AA, and 0011AB)

1.2.10.1 Payment

Payment will be made at the contract unit price per ton for bituminous surface and binder course as described in SECTION 32 10 00.00 BITUMINOUS CONCRETE PAVEMENT. Payment constitutes full compensation for preparing or reconditioning the base course or existing pavement; for furnishing all materials, equipment, plant, and tools; and for labor and other incidentals necessary to complete work required. Prime/tack coat, as necessary, shall be included in surface course payment.

No separate measurement or direct payment will be made for bituminous pavement used to repair street cuts for drainage structure and culvert installations. All associated costs for repair work shall be included with the applicable unit prices in the Bid Schedule.

1.2.10.2 Unit of Measure

Unit of Measure: Ton (TN)

1.2.11 LIMESTONE SCREENINGS (Bid Item 0010AB)

1.2.11.1 Payment

Payment will be made at the contract unit price for crushed aggregate and limestone screening as described in SECTION 32 11 23.00 GRADED CRUSHED AGGREGATE BASE COURSE. Payment constitutes full compensation for labor, materials, equipment, tools, and incidentals necessary to complete the work.

1.2.11.2 Measurement

Crushed aggregate and limestone screenings will be measured for payment in cubic yards of trail surface materials, completed and accepted.

1.2.11.3 Unit of Measure

Unit of Measure: Cubic Yards (CY)

1.2.12 GRADED CRUSHED AGGREGATE, CA-53 (Bid Item 0010AC)

1.2.12.1 Payment

Payment will be made at the contract unit price for graded crushed aggregate, CA-53 as described in SECTION 32 11 23.00 GRADED CRUSHED AGGREGATE BASE COURSE. This includes the aggreate used for all levee turna around areas and gravel pad shown adjacent to 6N - 96" Gatewell. Payment constitutes full compensation for labor, materials, equipment, tools, and incidentals necessary to complete the work.

1.2.12.2 Measurement

Graded crushed aggregate will be measured for payment in cubic yards of trail surface materials, completed and accepted.

1.2.12.3 Unit of Measure

Unit of Measure: Cubic Yards (CY)

1.2.13 VEHICLE BARRIERS TYPE I, TYPE II, AND BRIDGE BOLLARDS(Bid Item 0010AD,0010AE, 0013AC, 0034AE, and 0035AD)

1.2.13.1 Payment

Payment at the contract unit price will be made for furnishing and installing fixed and removable bollards as indicated on the drawings.

Vehicle Barrier - Type I is indentified in the bid schedule as a set. A set consist of two fixed bollards and one removable bollards.

Vehicle Barrier - Type II is indentified in the bid schedule per fixed bollard.

Payment constitutes full compensation for all materials and labor associated with site preparation, excavating and backfilling and other incidental items necessary to complete the work.

1.2.13.2 Measurement

Vehicle barriers will be measured for payment by the number of vehicle barriers constructed in place, and accepted.

1.2.13.3 Unit of Measure

Unit of measure: EACH (EA)

1.2.14 PEDESTRIAN BRIDGE CONCRETE ABUTMENTS AND PIERS (Bid Item 0013AA, 0034AA, 0034AB, 0035AA and 0035AB)

Payment at the contract unit price will be made for furnishing and installing concrete abutments and piers as indicated on the drawings and in accordance with Section 03 30 00.00 CONCRETE. Payment constitutes full compensation for all materials and labor associated with site preparation, excavating and backfilling and other incidental items necessary to complete

the work.

1.2.15 A-FRAME GATES (Bid Item 0010AF)

1.2.15.1 Payment

Payment will be made at the contract unit price for A-Frame Gates as shown in the drawings. Payment constitutes full compensation for all labor, materials, equipment, tools, and incidentals necessary to complete the work.

1.2.15.2 Unit of Measure

Unit of Measure: Each (EA)

1.2.16 RIPRAP CLASS 2 GRADATION AND RIPRAP REVETMENT GRADATION (Bid Item 0014AA, and 0014AB)

1.2.16.1 Payment

Payment at the contract unit price for riprap material acceptably placed and within the tolerances required as described in SECTION 31 37 16.00 03 RIP RAP FOR EROSION CONTROL will be made. All associated costs for placement of goetextile fabric under the rip rap shall be considered incidental. Payment constitutes full compensation for all labor, materials, equipment, tools, and incidentals necessary to complete the work.

Deductions: All stone permitted by the Contracting Officer to remain outside the tolerances required will be deducted from the quantity to be paid for. Volume of excess stone will be computed, using the average end area of excess above the tolerance line. The excess volume will be deducted from the payment quantity at a rate of 135 pounds per cubic foot regardless of actual weight per cubic foot.

1.2.16.2 Measurement

Stone material shall be weighed on accurate, approved scales furnished or made available by the Contractor. Before being approved for use, the scales shall have been tested by the State of Indiana Department of Weights and Measures, or by a reliable scale servicing company, so as to operate within a degree of error not greater than one percent, and be sensitive to a change in load of one-fifth of one percent: both percentages being based on the total required weight of material normally weighed as a unit on the scale. Scales shall be spot checked for accuracy and sensitivity at least once a week as the contract work progresses. When materials are weighed in hauling vehicles, gross weights shall be checked and the vehicle tare weight determined as often as the Contracting Officer directs. The Contractor shall furnish such weights, accessories, and assistance as the Contracting Officer may require for making weighing equipment tests.

Weighing operations shall be performed offsite, as approved, in the presence of the Contracting Officer, unless waived. Each load shall be accompanied by duplicate copies of delivery tickets certified by the weighmaster. At a minimum each ticket shall contain the following: Date and time, Vehicle number, Gross weight, Vehicle tare weight, Net weight, Material weighed, and Signature of weighmaster. Delivery tickets shall be collected by the Contractor, and one copy thereof furnished to the Contracting Officer at the close of each day's operations.

1.2.16.3 Unit of Measure

Unit of measure: Ton (TN)

1.2.17 GABION MATTRESS (Bid Item 0014AC)

1.2.17.1 Payment

Payment will be made for costs associated with gabion mattress, including the cost of furnishing, assembling, and placing the wire baskets, the stone fill, and all other materials, labor, equipment, tools, supplies, and incidental costs in connection with completing this item of work.

1.2.17.2 Measurement

Gabions meeting the requirements of these specifications and acceptably placed within the limits indicated on the drawings or otherwise established in the field, will be measured for payment by the cubic yard of stone filled gabions in place.

1.2.17.3 Unit of Measuree

Unit of measure: Cubic Yards (CY)

1.2.18 STEEL SHEET PILING (Bid Item 0013AD, 0015AB, 0022AA, 0023AB, 0023AC, 0025AA, 0025AB, 0030AB, 0034AF, 0035AE, 0038AA, 039AA, 0040AA, 0041AA, 0042AB and 0043AA)

1.2.18.1 Payment

Payment at the contract unit price will be made for the installation of steel sheet piling as described in SECTION 35 49 13.10 03 METAL SHEET PILING, including removing and disposing of all materials. Payment constitutes full compensation for all necessary labor, equipment, materials, steel channels and bars, and other incidental items necessary to complete the work.

1.2.18.2 Unit of Measure

Unit of measure: Square Feet (SF)

1.2.19 STEEL H-PILES (Bid Item 0013AE, 0034AG, 0035AF, and 0042AC)

1.2.19.1 Payment

The Contractor shall furnish a price which includes all necessary equipment, tools, material, labor, and supervision required to: deliver, handle, install, and cut off the piles (including test piles); conduct the load tests; and meet the applicable contract requirements. Payment for piles will be on the basis of the lengths of the piles measured from cut off elevations to final tip elevations. No additional payment will be made for: damaged, rejected, or misplaced piles; withdrawn piles other than test piles withdrawn as directed; any portion of a pile remaining above the cut off elevation; backdriving; cutting off piles; splicing; build-ups; or any cut off length of piles.

1.2.19.2 Unit of Measure

The Contracting Officer reserves the right to increase or decrease the

aggregate length of piles to be furnished and installed by changing the foundation pile locations or elevations, requiring the installation of additional piles, or requiring omission of piles from the requirements shown and specified. Whether or not such changes are made, the Contractor will be paid at the contract unit price per foot, multiplied by the total length in feet of acceptable piles actually installed.

Unit of measure: Square Feet (SF)

1.2.20 FENCE REMOVAL (Bid Item 0016AA)

1.2.20.1 Payment

Payment will be made at the contract unit price for removal of existing fence within the work limits as shown on drawings and as described in SECTION 02 41 00, SITE DEMOLITION. Payment constitutes full compensation for all plant, labor, equipment, materials, and incidentals necessary to complete the work.

1.2.20.2 Measurement

Fence removal will be measured for payment in linear feet of fence removed.

1.2.20.3 Unit of Measure

Unit of measure: Linear Foot (LF)

1.2.21 PERMANENT FENCE 5' AND PERMANENT FENCE 8' (Bid Item 0016AB and 0016AC)

1.2.21.1 Payment

Payment at the contract unit price will be made for installation and removal of fencing, and gates within the fence as described in SECTION 32 31 13 CHAIN LINK FENCES AND GATES and indentified on the drawings. The areas impacted are primarly 5S East of Harts Ditch, small areas are also indentified on 6N. All costs associated with manufacturing, furnishing, delivering, excavating, installing, of the permanent chain link fence 5' and 8' tall as shown on drawings including barbed wire, metal posts, tie wires, rails braces, and other misc. parts shall be paid for at the per linear foot of permanent fence under the unit price.

1.2.21.2 Measurement

Measurement will be based on the linear foot of permanent fence installed.

1.2.21.3 Unit of Measure

Unit of measure: Linear Foot (LF)

1.2.22 CONCRETE CURB AND CONCRETE GUTTER (Bid Item 0032)

1.2.22.1 Payment

All cost for all labor, equipment, materials and incidentals including fabrication, delivery, formwork, excavating, concrete and reinforcing shall be paid for at the per linear foot of concrete curb and concrete gutter under the unit price.

1.2.22.2 Measurement

Measurement will be based on the linear foot of concrete curb and concrete gutter installed.

1.2.22.3 Unit of Measure

Unit of measure: Linear Foot (LF)

1.2.23 REMOVAL OF UNSUITABLE MATERIAL(Bid Item 0012)

1.2.23.1 Payment

All costs associates with the off site disposal of the material piles found on site will be paid for by the contract unit price. This item covers the removal of material for the reconstruction of Parkway Drive.

1.2.23.2 Measurement

Materials being disposed off-site will be measured for payment by the cubic yard as recorded on-site, as approved by the Contracting Officers's Representative.

1.2.23.3 Unit of Measure

Unit of Measure: Cubic Yard (CY)

PART 2 PRODUCTS (Not Applicable)

PART 3 EXECUTION (Not Applicable)

-- End of Section --

production supervision or work crew; if work on a definable feature is resumed after a substantial period of inactivity; or if other problems develop.

3.7 TESTS

3.7.1 Testing Procedure

The Contractor shall perform specified or required tests to verify that control measures are adequate to provide a product which conforms to contract requirements. Upon request, the Contractor shall furnish to the Government duplicate samples of test specimens for possible testing by the Government. Testing includes operation and/or acceptance tests when specified. The Contractor shall procure the services of a Corps of Engineers approved testing laboratory or establish an approved testing laboratory at the project site. The Contractor shall perform the following activities and record and provide the following data:

a. Verify that testing procedures comply with contract requirements.

b. Verify that facilities and testing equipment are available and comply with testing standards.

c. Check test instrument calibration data against certified standards.

d. Verify that recording forms and test identification control number system, including all of the test documentation requirements, have been prepared.

e. Results of all tests taken, both passing and failing tests, shall be recorded on the CQC report for the date taken. Specification paragraph reference, location where tests were taken, and the sequential control number identifying the test shall be given. If approved by the Contracting Officer, actual test reports may be submitted later with a reference to the test number and date taken. An information copy of tests performed by an offsite or commercial test facility shall be provided directly to the Contracting Officer. Failure to submit timely test reports as stated may result in nonpayment for related work performed and disapproval of the test facility for this contract.

f. The Corps of Engineers approves laboratories for specific individual tests. Ensure that the laboratory performing the test is approved by the Corps of Engineers to run each specific test and all related tests necessary for each complete test process.

g. A current list of Corps of Engineers approved commercial laboratories may be accessed electronically at this address: http://www.wes.army.mil/SL/MTC/ValidatedLabsList.htm

3.7.2 Testing Laboratories

3.7.2.1 Capability Check

The Government reserves the right to check laboratory equipment in the proposed laboratory for compliance with the standards set forth in the contract specifications and to check the laboratory technician's testing procedures and techniques. Laboratories utilized for testing soils, concrete, asphalt, and steel shall meet criteria detailed in ASTM D 3740

and ASTM E 329.

3.7.2.2 Capability Recheck

If the selected laboratory fails the capability check, the Contractor will be assessed a charge of $2,500 to reimburse the Government for each succeeding recheck of the laboratory or the checking of a subsequently selected laboratory. Such costs will be deducted from the contract amount due the Contractor.

3.7.3 Onsite Laboratory

The Government reserves the right to utilize the Contractor's control testing laboratory and equipment to make assurance tests, and to check the Contractor's testing procedures, techniques, and test results at no additional cost to the Government.

3.7.4 Furnishing or Transportation of Samples for Testing

Costs incidental to the transportation of samples or materials shall be borne by the Contractor. Samples of materials for test verification and acceptance testing by the Government shall be delivered to the Contracting Officer, unless otherwise specified or directed.

3.8 COMPLETION INSPECTION

3.8.1 Punch-Out Inspection

Near the end of the work, or any increment of the work established by a time stated in the SPECIAL CONTRACT REQUIREMENTS Clause, "Commencement, Prosecution, and Completion of Work", or by the specifications, the CQC Manager shall conduct an inspection of the work. A punch list of items which do not conform to the approved drawings and specifications shall be prepared and included in the CQC documentation, as required by paragraph DOCUMENTATION. The list of deficiencies shall include the estimated date by which the deficiencies will be corrected. The CQC System Manager or staff shall make a second inspection to ascertain that all deficiencies have been corrected. Once this is accomplished, the Contractor shall notify the Government that the facility is ready for the Government Pre-Final inspection.

3.8.2 Pre-Final Inspection

The Government will perform the pre-final inspection to verify that the facility is complete and ready to be occupied. A Government Pre-Final Punch List may be developed as a result of this inspection. The Contractor's CQC System Manager shall ensure that all items on this list have been corrected before notifying the Government, so that a Final inspection with the customer can be scheduled. Any items noted on the Pre-Final inspection shall be corrected in a timely manner. These inspections and any deficiency corrections required by this paragraph shall be accomplished within the time slated for completion of the entire work or any particular increment of the work if the project is divided into increments by separate completion dates.

3.8.3 Final Acceptance Inspection

The Contractor's Quality Control Inspection personnel, plus the superintendent or other primary management person, and the Contracting

Officer's Representative shall be in attendance at the final acceptance inspection. Additional Government personnel including, but not limited to, those from Base/Post Civil Facility Engineer user groups, and major commands may also be in attendance. The final acceptance inspection will be formally scheduled by the Contracting Officer based upon results of the Pre-Final inspection. Notice shall be given to the Contracting Officer at least 14 days prior to the final acceptance inspection and shall include the Contractor's assurance that all specific items previously identified to the Contractor as being unacceptable, along with all remaining work performed under the contract, will be complete and acceptable by the date scheduled for the final acceptance inspection. Failure of the Contractor to have all contract work acceptably complete for this inspection will be cause for the Contracting Officer to bill the Contractor for the Government's additional inspection cost in accordance with the contract clause titled "Inspection of Construction".

3.9 DOCUMENTATION

The Contractor shall maintain current records providing factual evidence that required quality control activities and/or tests have been performed. These records shall include the work of subContractors and suppliers and shall be on an acceptable form that includes, as a minimum, the following information:

a. Contractor/subContractor and their area of responsibility.

b. Operating plant/equipment with hours worked, idle, or down for repair.

c. Work performed each day, giving location, description, and by whom. When Network Analysis (NAS) is used, identify each phase of work performed each day by NAS activity number.

d. Test and/or control activities performed with results and references to specifications/drawings requirements. The control phase shall be identified (Preparatory, Initial, Follow-up). List of deficiencies noted, along with corrective action.

e. Quantity of materials received at the site with statement as to acceptability, storage, and reference to specifications/drawings requirements.

f. Submittals and deliverables reviewed, with contract reference, by whom, and action taken.

g. Offsite surveillance activities, including actions taken.

h. Job safety evaluations stating what was checked, results, and instructions or corrective actions.

i. Instructions given/received and conflicts in plans and/or specifications.

j. Contractor's verification statement.

k. As-built contract drawings consisting of two (2) full size sets of contract drawings marked in red to depict all conditions differing from the original plans.

l. Shop drawings consisting of three (3) complete sets of prints as finally approved.

m. These records shall indicate a description of trades working on the project; the number of personnel working; weather conditions encountered; and any delays encountered. These records shall cover both conforming and deficient features and shall include a statement that equipment and materials incorporated in the work and workmanship comply with the contract. The original and one copy of these records in report form shall be furnished to the Government daily within twenty-four (24) hours after the date(s) covered by the report, except that reports need not be submitted for days on which no work is performed unless no work was performed as a result of adverse weather. As a minimum, one report shall be prepared and submitted for every seven days of no work and on the last day of a no work period. All calendar days shall be accounted for throughout the life of the contract. The first report following a day of no work shall be for that day only. Reports shall be signed and dated by the CQC system manager. The report from the CQC system manager shall include copies of test reports and copies of reports prepared by all subordinate quality control personnel.

These records shall indicate a description of trades working on the project; the number of personnel working; weather conditions encountered; and any delays encountered. These records shall cover both conforming and deficient features and shall include a statement that equipment and materials incorporated in the work and workmanship comply with the contract. The original and one copy of these records in report form shall be furnished to the Government daily within twenty-four (24) hours after the date covered by the report, except that reports need not be submitted for days on which no work is performed. As a minimum, one report shall be prepared and submitted for every 7 days of no work and on the last day of a no work period. All calendar days shall be accounted for throughout the life of the contract. The first report following a day of no work shall be for that day only. Reports shall be signed and dated by the CQC System Manager. The report from the CQC System Manager shall include copies of test reports and copies of reports prepared by all subordinate quality control personnel.

3.10 SAMPLE FORMS

The web-based Quality Control System (QCS) will generate the CQC Daily Report and other forms needed to track and manage the project.

3.11 NOTIFICATION OF NONCOMPLIANCE

The Contracting Officer will notify the Contractor of any detected noncompliance with the foregoing requirements. The Contractor shall take immediate corrective action after receipt of such notice. Such notice, when delivered to the Contractor at the work site, shall be deemed sufficient for the purpose of notification. If the Contractor fails or refuses to comply promptly, the Contracting Officer may issue an order stopping all or part of the work until satisfactory corrective action has been taken. No part of the time lost due to such stop orders shall be made the subject of claim for extension of time or for excess costs or damages by the Contractor.

-- End of Section --

SECTION TABLE OF CONTENTS

DIVISION 01 - GENERAL REQUIREMENTS

SECTION 01 52 02.00 10

TEMPORARY CONSTRUCTION FACILITIES

PART 1 GENERAL

1.1 APPLICABLE PUBLICATIONS
1.2 SUBMITTALS
1.3 Site Plan
1.4 USE OF UTILITY SERVICES
1.4.1 Sanitation
1.4.2 Telephone, Water and Electricity
1.5 BULLETIN BOARD, PROJECT SIGN, AND PROJECT SAFETY SIGN
1.5.1 Bulletin Board
1.5.2 Project and Safety Signs
1.6 PROTECTION AND MAINTENANCE OF TRAFFIC
1.7 CONTRACTOR'S TEMPORARY FACILITIES
1.7.1 Administrative Field Offices
1.7.2 Storage Area
1.7.3 Appearance of Trailers
1.7.4 Security Provisions
1.8 GOVERNMENT FIELD OFFICE
1.8.1 Facility Requirements
1.8.2 Trailer-Type Mobile Office
1.8.3 Existing facility
1.8.4 Telephone, Utilities, and Insurance
1.8.5 Janitorial Services
1.8.6 Security
1.8.6.1 Lighting
1.8.6.2 Temporary Fencing
1.9 TEMPORARY PROJECT SAFETY FENCING
1.10 WARNING SIGNS
1.11 CLEANUP
1.12 RESTORATION OF STORAGE AREA

PART 2 PRODUCTS (Not Used)

PART 3 EXECUTION (Not Used)

-- End of Section Table of Contents --

1.7.4 Security Provisions

Adequate outside security lighting shall be provided at the Contractor's temporary facilities. The Contractor shall be responsible for the security of its own equipment; in addition, the Contractor shall notify the appropriate law enforcement agency requesting periodic security checks of the temporary project field office.

1.8 GOVERNMENT FIELD OFFICE

The Contractor shall provide a temporary field office, at a location to be coordinated with the COR, for use by the Government. The Contractor shall have the option of either constructing a new building for use as the temporary field office, or providing such facilities in an existing building or trailer.

1.8.1 Facility Requirements

The temporary field office shall be approximately 12 feet in width, 30 feet in length and have a minimum headroom of 7 feet. It shall be provided with a work table (minimum size 42" x 72"), two free standing desks with locking drawers, a touchtone telephone with auto redial, telephone answering machine, plain paper fax machine, desk top plain paper/low volume photocopy machine (with all supplies including paper) capable of making 8 1/2" x 11", 8 1/2" x 14" and 11" x 17" copies, two swivel chairs with casters, four side chairs, one four drawer, steel, legal size "Class D" fire resistant file cabinet complete with lock, one reference table with stool, two 36" wide x 60" high five shelf bookcases, and one combination plan rack. The facility shall be weatherproof, and be supplied with heat in season. It shall have a minimum of one door, electric lights, a sufficient number of adjustable windows for adequate light and ventilation, indoor toilet facilities with an exterior holding tank, washing facilities, and a supply of approved drinking water and cups. The windows and doors shall be provided with locking devices. The windows shall be arranged to open and to be securely fastened from the inside. Glass panels in the windows shall be equipped with bars or heavy mesh screens which will prevent easy access to the building or trailer through these panels. The door shall be equipped with a dead bolt lock keyed from the outside of the door only. In warm weather, air conditioning shall be furnished which will maintain the office at 50 percent relative humidity and a room temperature 20 degree F below the outside temperature when the outside temperature is 95 degree F. Any new building erected by the Contractor for a temporary field office will remain the property of the Contractor and shall be removed when directed by the Contracting Officer.

1.8.2 Trailer-Type Mobile Office

The Contractor may, at its option, furnish and maintain a trailer-type mobile office acceptable to the Contracting Officer and providing as a minimum the facilities specified above. This temporary field office shall be constructed in accordance with EM 385-1-1.

1.8.3 Existing facility

In the event the temporary field office is provided in an existing building or trailer, the Contractor shall furnish space, facilities, and services equivalent to those specified.

1.8.4 Telephone, Utilities, and Insurance

The Contractor shall pay for all costs for utilities, hauling, insurance and rental for the temporary field office for the entire duration of this contract. The Contractor shall be responsible for the arrangement, installation and removal of one telephone unit including hookup and phone bills for both local and long distance calls for up to $100.00 per month at no additional cost to the Government.

1.8.5 Janitorial Services

The Contractor shall furnish daily janitorial services for the office, deemed necessary by the COR during the entire life of the contract. Toilet facilities shall be kept clean and sanitary at all times. Services shall be performed at such a time and in such a manner to minimize interference with the operations but will be accomplished during normal working hours. Services shall be accomplished to the satisfaction of the COR. The Contractor shall also provide daily trash collection and cleanup of the buildings and adjacent outside areas, snow removal in season, and shall dispose of all discarded debris in a manner approved by the COR.

1.8.6 Security

1.8.6.1 Lighting

Security lighting shall be installed around and 6 inches below the top of the temporary field office as directed by the Contracting Officer. The light fixtures shall be wall mounted, raintight, and weather resistant. The security lighting shall be controlled by a photo control switch.

1.8.6.2 Temporary Fencing

Temporary chain-link security fencing shall be installed around the perimeter of the field office. The height of the fence shall be 10 feet. Barb wire shall be installed along the top of the fence which will be properly grounded as needed [**(SENTENCE OPTIONAL FOR SOME PROJECTS)**]. The location of the gate and layout of the fencing shall be as shown on the drawings. The safety fencing shall be maintained by the Contractor during the life of the contract and, upon completion and acceptance of the work, shall become the property of the Contractor and shall be removed from the work site.

1.9 TEMPORARY PROJECT SAFETY FENCING

As soon as practicable, but not later than 15 days after the date established for commencement of work, the Contractor shall furnish and erect temporary project safety fencing at the project site as indicated on the drawing. The fence shall be made of high density polyethylene grid or approved equal, a minimum of 42 inches high, supported and tightly secured to steel posts located on minimum 10 foot centers. The safety fencing shall be maintained by the Contractor during the life of the contract and, upon completion and acceptance of the work, shall become the property of the Contractor and shall be removed from the work site.

1.10 WARNING SIGNS

Place warning signs at the construction area perimeter designating the

presence of construction hazards requiring unauthorized persons to keep out. Signs must be placed on all sides of the project, that are are adjacent to residential or public areas. Such along 5S alignment, 6S alignment, 6N alignment east of the utility cooridor. All points of entry shall have signs designating the construction site as a hard hat area.

1.11 CLEANUP

Construction debris, waste materials, packaging material and the like shall be removed from the work site daily. Any dirt or mud which is tracked onto paved or surfaced roadways shall be cleaned away. Materials resulting from demolition activities which are salvageable shall be stored within the fenced area described above. Stored material not in trailers, whether new or salvaged, shall be neatly stacked when stored.

1.12 RESTORATION OF STORAGE AREA

Upon completion of the project and after removal of trailers, materials, and equipment from within the fenced area, the fence shall be removed and will become the property of the Contractor. Areas used by the Contractor for the storage of equipment or material, or other use, shall be restored to the original or better condition. Gravel used to traverse grassed areas shall be removed and the area restored to its original condition, including top soil and seeding as necessary.

PART 2 PRODUCTS (Not Used)

PART 3 EXECUTION (Not Used)

-- End of Section --

intended actions to prevent introduction of such materials into the air, water, or ground; and details provisions for compliance with Federal, State, and local laws and regulations for storage and handling of these materials. In accordance with EM 385-1-1, a copy of the Material Safety Data Sheets (MSDS) and the maximum quantity of each hazardous material to be on site at any given time shall be included in the Contaminant Prevention Plan. As new hazardous materials are brought on site or removed from the site, the plan shall be updated.

p. A waste water management plan that identifies the methods and procedures for management and/or discharge of waste waters which are directly derived from construction activities, such as concrete curing water, clean-up water, dewatering of ground water, disinfection water, hydrostatic test water, and water used in flushing of lines. If a settling/retention pond is required, the plan shall include the design of the pond including drawings, removal plan, and testing requirements for possible pollutants. If land application will be the method of disposal for the waste water, the plan shall include a sketch showing the location for land application along with a description of the pretreatment methods to be implemented. If surface discharge will be the method of disposal, a copy of the permit and associated documents shall be included as an attachment prior to discharging the waste water. If disposal is to a sanitary sewer, the plan shall include documentation that the Waste Water Treatment Plant Operator has approved the flow rate, volume, and type of discharge. The wastewater management plan must also address the handling, treatment, and disposal of water from dewatering cofferdams during work operations.

q. A historical, archaeological, cultural resources, biological resources, and wetlands plan that defines procedures for identifying and protecting historical, archaeological, cultural resources, biological resources and wetlands known to be on the project site: and/or identifies procedures to be followed if historical archaeological, cultural resources, biological resources and wetlands not previously known to be on site or in the area are discovered during construction. The plan shall include methods to assure the protection of known or discovered resources and shall identify lines of communication between Contractor personnel and the Contracting Officer.

r. A sediment disposal plan, that gives the proposed disposal location(s) for all sediment and entrained water to be removed during cofferdam construction. No sediment nor entrained water may be placed in the Little Calumet River untreated, and no sediment or entrained water may be discharged or placed on the banks of the river.

1.7.3 Appendix

Copies of all environmental permits, permit application packages, approvals to construct, notifications, certifications, reports, and termination documents shall be attached, as an appendix, to the Environmental Protection Plan.

1.8 PROTECTION FEATURES

Prior to the start of any on-site construction activities, the Contractor and the Contracting Officer shall make a joint condition survey. Immediately following the survey, the Contractor shall prepare a brief report including a plan describing the features requiring protection under the provisions of the Contract Clauses, which are not specifically

identified on the drawings as environmental features requiring protection along with the condition of trees, shrubs and grassed areas immediately adjacent to the site of work and adjacent to the Contractor's assigned storage area and access route(s), as applicable. This survey report shall be signed by both the Contractor and the Contracting Officer upon mutual agreement as to its accuracy and completeness. The Contractor shall protect those environmental features included in the survey report and any indicated on the drawings, regardless of interference which their preservation may cause to the Contractor's work under the contract.

1.9 SPECIAL ENVIRONMENTAL REQUIREMENTS

The Contractor shall comply with the environmental requirements of this section.

1.10 ENVIRONMENTAL ASSESSMENT OF CONTRACT DEVIATIONS

Any deviations, requested by the Contractor, from the drawings, plans and specifications which may have an environmental impact will be subject to approval by the Contracting Officer and may require an extended review, processing, and approval time. The Contracting Officer reserves the right to disapprove alternate methods, even if they are more cost effective, if the Contracting Officer determines that the proposed alternate method will have an adverse environmental impact.

1.11 NOTIFICATION

The Contracting Officer will notify the Contractor in writing of any observed noncompliance with Federal, State or local environmental laws or regulations, permits, and other elements of the Contractor's Environmental Protection plan. The Contractor shall, after receipt of such notice, inform the Contracting Officer of the proposed corrective action and take such action when approved by the Contracting Officer. The Contracting Officer may issue an order stopping all or part of the work until satisfactory corrective action has been taken. No time extensions shall be granted or equitable adjustments allowed to the Contractor for any such suspensions. This is in addition to any other actions the Contracting Officer may take under the contract, or in accordance with the Federal Acquisition Regulation or Federal Law.

PART 2 PRODUCTS (NOT USED)

PART 3 EXECUTION

3.1 ENVIRONMENTAL PERMITS AND COMMITMENTS

The Contractor shall be responsible for obtaining and complying with all environmental permits and commitments required by Federal, State, Regional, and local environmental laws and regulations.

3.1.1 NOI Posting Requirement

The Government will provide copies of the NOI, and all other applicable Government correspondence with IDEM, to the Contractor. The Contractor shall post the information required in 327 IAC 15-5-7 (b)(6) in a publicly accessible location near the entrance of the project site. The location will be jointly agreed to by the Contractor and the Government during the pre-construction conference. The Contractor shall take all actions necessary to keep the NOI and applicable correspondence protected from the

weather so that it remains legible. If, in the judgment of the Contracting Officer's Representative, the documents degrade to the point of being illegible, the Contractor shall replace the documents with fresh copies and remedy the problems that caused the degradation.

3.2 LAND RESOURCES

The Contractor shall confine all activities to areas defined by the drawings and specifications. Prior to the beginning of any construction, the Contractor shall identify any land resources to be preserved within the work area. Except in areas indicated on the drawings or specified to be cleared, the Contractor shall not remove, cut, deface, injure, or destroy land resources including trees, shrubs, vines, grasses, topsoil, and land forms without approval. No ropes, cables, or guys shall be fastened to or attached to any trees for anchorage unless specifically authorized. The Contractor shall provide effective protection for land and vegetation resources at all times as defined in the following subparagraphs. Stone, soil, or other materials displaced into uncleared areas shall be removed by the Contractor.

3.2.1 Work Area Limits

Prior to commencing construction activities, the Contractor shall mark the areas that need not be disturbed under this contract. Isolated areas within the general work area which are not to be disturbed shall be marked or fenced. Monuments and markers shall be protected before construction operations commence. Where construction operations are to be conducted during darkness, any markers shall be visible in the dark. The Contractor's personnel shall be knowledgeable of the purpose for marking and/or protecting particular objects.

3.2.2 Landscape

Trees, shrubs, vines, grasses, land forms and other landscape features indicated and defined on the drawings to be preserved shall be clearly identified by marking, fencing, or wrapping with boards, or any other approved techniques. The Contractor shall restore landscape features damaged or destroyed during construction operations outside the limits of the approved work area.

3.2.3 Erosion Control and Sediment Controls

The Contractor shall be responsible for providing erosion and sediment control measures in accordance with Federal, State, and local laws and regulations. The erosion and sediment controls selected and maintained by the Contractor shall be such that water quality standards are not violated as a result of the Contractor's construction activities. The area of bare soil exposed at any one time by construction operations should be kept to a minimum. The Contractor shall construct or install temporary and permanent erosion and sediment control best management practices (BMPs). BMPs may include, but not be limited to, vegetation cover, stream bank stabilization, slope stabilization, silt fences, construction of terraces, interceptor channels, sediment traps, inlet and outfall protection, diversion channels, and sedimentation basins. The Contractor's best management practices shall also be in accordance with the State of Indiana National Pollutant Discharge Elimination System (NPDES) Storm Water Pollution Prevention requirements. Any temporary measures shall be removed after the area has been stabilized.

SECTION TABLE OF CONTENTS

DIVISION 31 - EARTHWORK

SECTION 31 00 00

EARTHWORK

PART 1 GENERAL

1.1 Special Note
1.2 SUMMARY
1.3 REFERENCES
1.4 DEFINITIONS
1.4.1 Satisfactory Materials
1.4.2 Unsatisfactory Materials
1.4.3 Impervious Materials for Levee Construction
1.4.4 Topsoil
1.4.5 Degree of Compaction
1.4.6 Excavation
1.4.7 Embankment
1.4.8 Fill
1.4.9 Structural Backfill
1.4.10 Pervious Fill
1.4.11 Flowable Fill
1.4.12 Imported Earth Fill
1.5 SUBMITTALS
1.6 SUBSURFACE DATA
1.7 BORROW, STOCKPILE, AND DISPOSAL AREAS
1.7.1 Borrow Area
1.7.2 Selection of Borrow Material
1.7.3 Testing of Borrow Materials
1.7.4 Stockpile Locations
1.8 PLAN OF OPERATION
1.8.1 General
1.8.2 Equipment
1.8.3 Commercial Laboratory
1.9 TESTING
1.9.1 General
1.9.1.1 Procedures
1.9.1.2 Compliance
1.9.2 Schedule of Tests (Minimum)
1.9.2.1 Moisture Density Relations
1.9.2.2 Field Density and Moisture Content
1.9.2.3 Unconfined Compressive Strength
1.9.2.4 Atterberg Limits
1.9.2.5 Topsoil Tests
1.10 DRAINAGE AND DEWATERING
1.10.1 Control of Water
1.10.2 Drainage
1.10.3 Control Measures
1.10.4 Ground Water
1.10.5 Cofferdams
1.11 EMBANKMENT/BACKFILL PROTECTION
1.12 MAINTAINING FLOOD PROTECTION AND DRAINAGE DURING CONSTRUCTION
1.13 CONSTRUCTION LIMITS

PART 2 PRODUCTS

2.1 2.1 Ballast
2.2 Ballast Quality Requirements

PART 3 EXECUTION

3.1 STRIPPING
3.1.1 Levee Foundation
3.1.2 Borrow Areas
3.1.3 Topsoil
3.2 EXCAVATION
3.2.1 General
3.2.2 Disposition of Satisfactory Materials
3.2.3 Disposition of Unsatisfactory Materials
3.2.4 Excavation for Structures and Utilities
3.2.5 Drainage Ditches and Swales
3.2.6 Inspection Trench
3.2.6.1 Inspection Trench Type
3.2.6.2 Inspection Trench Backfill
3.2.7 Utilization of Excavated Materials
3.3 SELECTION OF BORROW MATERIAL
3.3.1 Borrow materials from commercial borrow source
3.3.2 Environmental Testing of Borrow Materials
3.3.2.1 Soil Sampling Plan for Borrow Source
3.3.2.2 Environmental Soil Sampling Report for Contractor-chosen borrow source
3.4 EMBANKMENT/FILL FOUNDATION PREPARATION
3.4.1 Foundation Preparation
3.4.2 Placement
3.4.3 Fill Locations
3.4.4 Foundation within the Levee Footprint
3.4.5 Fill Material
3.4.6 Staged Construction
3.4.7 Preload Embankment
3.5 FROZEN GROUND
3.5.1 Fill Placement
3.5.2 Fill Material Conditions
3.6 EMBANKMENT MATERIALS
3.7 EMBANKMENT CONSTRUCTION
3.7.1 Compacted Impervious Levee Embankment
3.7.1.1 Equipment
3.7.1.2 Placement
3.7.1.3 Compaction
3.7.1.4 Preload Embankment
3.7.1.5 Reading of Settlement Gages
3.7.2 Dressing
3.8 SPREADING TOPSOIL
3.9 ANNULAR BACKFILL
3.10 STRUCTURAL BACKFILL
3.10.1 Structural Backfill Material
3.10.2 Placement
3.11 CROSS SECTIONS
3.12 GRADE TOLERANCES
3.13 SLIDES
3.14 DITCHES AND DEPRESSIONS
3.15 EXCAVATION, EMBANKMENT, AND PREPARATION OF SUBGRADE FOR ROADWAYS
3.15.1 Subgrade Preparation

3.15.2 Embankment
3.15.2.1 Earth Embankment
3.15.2.2 Compaction
3.15.3 Shoulder Construction
3.15.4 Finishing
3.15.5 Subgrade and Embankment Protection
3.15.6 Roads
3.15.7 Ramps
3.16 QUALITY CONTROL
3.16.1 Quality Control System
3.16.2 Records
3.17 Railroad Ballast and Trackwork
3.17.1 General
3.17.2 Placement of Backfill Material
3.17.3 Trackwork
3.17.3.1 Crossties
3.17.3.2 Tie Plate
3.17.3.3 Continuous Welded Rail
3.17.3.4 Joint Bar
3.17.3.5 Final Gauging
3.17.3.6 Anchor and Double Spiking
3.17.3.7 Rail Installation
3.17.3.8 Ballasting
3.17.3.9 Surfacing
3.17.3.10 Alignment

-- End of Section Table of Contents --

SECTION 31 00 00

EARTHWORK

PART 1 GENERAL

1.1 Special Note

Italicized items within this specification pertain to the railroad closure.

1.2 SUMMARY

The work covered by this section consists of furnishing all plant, labor, equipment, and materials; and performing all operations necessary for stripping, stockpiling materials, excavation of existing levees, excavation of borrow areas, excavation of drainage ditches and swales, miscellaneous excavation, removal of unsuitable material from levee foundations, and all other excavation incidental to the construction of levees, drainage structures, and channel improvement *excavation, removal of unsuitable material, foundation preparation and backfilling of foundations for railroad closure structures and the removal and reinstallation of the rail track*. The work covered by this section also consists of performing all operations in connection with foundation preparation and the construction of levee embankments, including inspection trench excavations, new levee, placement of impervious fill for the access ramps, backfill at drainage structures, and other incidental earthwork as may be necessary to complete the levee, as shown on the drawings, as hereinafter specified, and as directed by the Contracting Officer or Contracting Officer's Representative (COR).

1.3 REFERENCES

The publications listed below form a part of this specification to the extent referenced. The publications are referred to in the text by basic designation only.

ASTM INTERNATIONAL (ASTM)

ASTM C 117	(2004) Materials Finer Than 75 micrometer (No. 200) Sieve in Mineral Aggregates by Washing
ASTM C 127	(2004) Density, Relative Density (Specific Gravity), and Absorption of Coarse Aggregate
ASTM C 136	(2005) Standard Test Method for Sieve Analysis of Fine and Coarse Aggregates
ASTM C 142	(1997; R 2004) Clay Lumps and Friable Particles in Aggregates
ASTM C 535	(2003e1) Resistance to Degradation of Large-Size Coarse Aggregate by Abrasion and Impact in the Los Angeles Machine

ASTM C 88	(2005) Soundness of Aggregates by Use of Sodium Sulfate or Magnesium Sulfate
ASTM D 1556	(2000) Density and Unit Weight of Soil in Place by the Sand-Cone Method
ASTM D 1557	(2002e1) Laboratory Compaction Characteristics of Soil Using Modified Effort (56,000 ft-lbf/cu. ft. (2,700 kN-m/cu.m.))
ASTM D 2166	(2006) Standard Test Method for Unconfined Compressive Strength of Cohesive Soil
ASTM D 2487	(2006) Soils for Engineering Purposes (Unified Soil Classification System)
ASTM D 2922	(2005) Density of Soil and Soil-Aggregate in Place by Nuclear Methods (Shallow Depth)
ASTM D 3017	(2005) Water Content of Soil and Rock in Place by Nuclear Methods (Shallow Depth)
ASTM D 4318	(2005) Liquid Limit, Plastic Limit, and Plasticity Index of Soils
ASTM D 448	(2003a) Sizes of Aggregate for Road and Bridge Construction
ASTM D 698	(2000a) Laboratory Compaction of Soil Using Standard Effort (12,400 ft-lb/ft3 (600 kn-m/m3)

U.S. ARMY CORPS OF ENGINEERS (USACE)

COE CRD-C 119	(1997) Handbook for Concrete and Cement Standard Method of Test for Flat or Elongated Particles in Coarse Aggregate
EM 385-1-1	(2003) Safety -- Safety and Health Requirements

1.4 DEFINITIONS

1.4.1 Satisfactory Materials

Satisfactory materials shall comprise any materials classified by ASTM D 2487 as GW, GP, GM, GP-GM, GW-GM, GC, GP-GC, GM-GC, SW, SP, SW-SM, SW-SC, SP-SM, SP-SC, SM, SC, ML, CL, and CL-ML. Satisfactory materials shall consist of material free from roots and other organic matter, contamination from hazardous, toxic, or radiological substances, trash, debris, ice, snow, frozen materials, and stones larger than 3 inches in any dimension. Satisfactory materials may also be called acceptable materials in these specifications. Satisfactory materials obtained from any given borrow source shall meet the environmental requirements in paragraph "Environmental Testing of Borrow Materials."

1.4.2 Unsatisfactory Materials

Unsatisfactory materials also include rubbish, vegetation, muck, highly plastic soils, construction debris, or other materials not meeting the definition of satisfactory materials. Material from any given borrow site that does not satisfy all the requirements set forth in paragraph "Environmental Testing of Borrow Materials" shall be deemed unsatisfactory and shall not be used for this contract.

1.4.3 Impervious Materials for Levee Construction

Satisfactory impervious materials shall consist of any materials classified as SC, CL-ML, or CL by ASTM D 2487 with not less than 35 percent by weight passing a No. 200 sieve.

1.4.4 Topsoil

Topsoil shall be natural, friable sandy loam material consisting of 30 percent to 50 percent sand. Topsoil shall have an organic content between 3 percent and 20 percent by weight, a pH range between 6.1 and 7.8, and shall be characteristic of representative productive soils in the vicinity. Topsoil shall be free from subsoil, noxious weeds, stones, roots, lime, concrete, ashes, slag, toxic substances, and all materials and substances that may be harmful and or hinder grading, planting, establishment, and maintenance operations. Topsoil shall be obtained from required stripping operations, and from offsite sources selected by the Contractor and approved by the Contracting Officer. All topsoil, from all sources, must meet the physical and chemical property requirements of this paragraph and paragraph 3.1.3 Topsoil.

1.4.5 Degree of Compaction

Degree of compaction for levee embankments, levee subgrades, and all other earthwork will be evaluated relative to the Standard Proctor Test described in ASTM D 698.

1.4.6 Excavation

Excavation shall include the satisfactory removal and deposition of all materials.

1.4.7 Embankment

As used in these specifications, the term "embankment" is defined as the earth fill portions of the levee or roadway subgrade prepared to finish grade after stripping and removal of unsatisfactory material.

1.4.8 Fill

As used in these specifications, the term "fill" includes all fill, except structural backfill, deposited in layers and compacted by rolling or tamping.

1.4.9 Structural Backfill

Structural backfill material shall consist of satisfactory materials free from rocks 3 inches or larger in any dimension or free from rocks of such size as recommended by the pipe manufacturer, whichever is smaller. *Structural backfill under foundations shall be placed and compacted in*

layers in accordance with the specifications. Stone aggregate under the railroad closure structure foundation shall meet the gradation of ASTM D 448 #57 stone. A 6-inch compacted layer shall be placed under the foundation and compacted

1.4.10 Pervious Fill

Pervious fill for closure structures shall be well graded sand with 100 percent by weight passing the 3/8 inch sieve and not more than 10 percent by weight passing the No. 200 sieve.

1.4.11 Flowable Fill

A cementitious fill material consisting of Portland cement, water, admixtures, and fillers. Flowable fill shall be used as backfill in trenches for pipe structures, culverts, and utility cuts at the locations shown on the plans. Flowable fill shall conform to INDOT Standard Specification Section 213.

1.4.12 Imported Earth Fill

As used in these specifications includes all fill imported from off site, deposited or placed in layers and compacted, that is obtained from a non-commercial borrow source. Imported earth fill must meet the testing requirements detailed in paragraph 3.17 IMPORTED EARTH FILL TESTING REQUIREMENTS. Terminologies used in project plans for various types of fill material that may fall under definition of imported earth fill include but are not limited to topsoil, structural backfill, pervious fill/materials, impervious fill/materials, satisfactory fill/materials, and flowable fill.

1.5 SUBMITTALS

Government approval is required for submittals with a "G" designation; submittals not having a "G" designation are for information only. When used, a designation following the "G" designation identifies the office that will review the submittal for the Government. The following shall be submitted in accordance with Section 01 33 00 SUBMITTAL PROCEDURES:

SD-01 Preconstruction Submittals

Plan of Operation; G, CS

Dewatering Work Plan; G, CS

Cofferdam Work Plan; G, CS

Commercial Borrow Source; G, CS

Survey of Existing Berm Crest Elevations; G, CS

Submit name and location of commercial source of borrow material and a letter from owner/operator of quarry or borrow site certifying that all environmental and operating permits have been acquired.

Soil Sampling Plan for Contractor-chosen borrow source; G, DH, PL

Prior to sampling borrow material from a Contractor-chosen borrow

source, the Contractor must have a Government approved soil sampling plan. The Contractor shall submit a soil sampling plan for environmental testing of the borrow material before proceeding with sampling of any given source. Samples collected prior to Government approval of a soil sampling plan will not be considered and any costs associated with sampling prior to approval of a soil sampling plan will be the Contractors expense. In addition to DH, other parties who may be reviewing the report include CS, PL, Local Sponsor, and any other entity deemed appropriate by the Government. The comments from all reviewers will be considered in the review and approval process of the soil sampling plan.

SD-06 Test Reports

Quality Control Test Reports

Contractor shall submit copies of all quality control testing within 48 hours after the completion of laboratory testing.

Environmental Soil Sampling Report for Contractor-chosen borrow source; G, DH

Prior to excavating material from any given borrow source and bringing it to the job site, the Contractor shall submit, for Government review and approval, the final report of environmental soil sampling and testing for any given source. No material from a borrow source shall be brought to the project site before the Contractor receives written Government approval of the environmental soil sampling report. In addition to DH, other parties who may be reviewing the report include CN and LS, Local Sponsor, and any other entity deemed appropriate by the Government. The comments from all reviewers will be considered in the review and approval process of the environmental soil sampling report.

SD-06 Test Reports

Topsoil Tests; G, CS

SD-07 Certificates

Analytical Laboratory Certification; G, CS

Contractor shall submit a valid Engineer Research Development Center, Waterways Experiment Station (ERDC/WES) letter of lab certification for the testing laboratory used. Significant lead time may be required to obtain an ERDC/WES certification.

1.6 SUBSURFACE DATA

Complete boring logs are appended to Section 00 31 32.13 GEOTECHNICAL DATA. The subsoil investigation report may be examined at the Corps of Engineers Chicago District office. These data represent the best subsurface information available; however, variations may exist in the subsurface between boring locations.

1.7 BORROW, STOCKPILE, AND DISPOSAL AREAS

1.7.1 Borrow Area

All costs to load, haul, and place the material and any other work associated with the placement of the material are to be the Contractor's costs. The Contractor shall bear all costs for developing the borrow area as necessary to obtain the material including the construction, repair and maintenance of any roads or facilities damaged by the Contractor's operations. Materials required in this Section for construction may be taken from approved commercial borrow sites or from approved borrow site locations obtained by the Contractor.

1.7.2 Selection of Borrow Material

Borrow material shall be selected to meet the requirements and conditions for the particular fill or embankment for which it is to be used. The Contractor shall bear all expense of developing the source, including rights-of-way for hauling.

1.7.3 Testing of Borrow Materials

Testing of borrow materials will be required before construction begins. Testing requirements are presented in paragraph 3.3 SELECTION OF BORROW MATERIAL.

1.7.4 Stockpile Locations

Stockpile locations have not been specified. The Contractor may stockpile material anywhere within the work limits, on the landward side; but, not in or near a collector ditch, on the levee embankment, nor in a location which would interfere with the line-of-protection. No stockpile shall remain in place after construction. Stockpiled impervious material for levee construction shall be used in embankment construction and unsatisfactory material shall be disposed of in accordance with the environmental requirements of these specifications. Disposal of both satisfactory and unsatisfactory material shall be the Contractor's responsibility. Unsatisfactory material may be disposed of in an approved commercial disposal site.

1.8 PLAN OF OPERATION

1.8.1 General

The Contractor shall submit a Plan of Operation to the Contracting Officer for approval. The Plan of Operation shall cover the timetable for construction, the sequence in which the construction will take place, all subcontractor information including schedules and sequencing, maintenance of existing flood protection during construction, temporary outlets and drainage, fill placement procedures, equipment to be used, and the name of the commercial laboratory to be used for the testing services. *The work around and associated with construction of the railroad closure structures requires permission, a construction permit and coordination with Norfolk Southern Railroad. The Contractor shall identify this feature within the Plan of Operation. The Contractor shall coordinate with the Contracting Officer and Norfolk Southern Railroad regarding the time necessary to excavate and construct the closure structures to minimize railroad track outages. The Contractor is required to maintain one track in operation at all times during the construction and shall provide any necessary*

excavation support, staging requirements and bracing to maintain the one operational track. The Plan of Operation must be submitted to the Contracting Officer at least 15 days before starting earthwork operations.

1.8.2 Equipment

Before the work is started, the Contractor shall submit to the Contracting Officer for approval in the Plan of Operations a list of all plant, equipment and tools to be used in the performance of the work. The equipment shall be maintained in satisfactory working condition at all times. The equipment shall be adequate and have the capability of producing the required compaction and meet the requirements specified in paragraph 3.7.1.1; and otherwise be suitable for construction of embankments as set forth herein.

1.8.3 Commercial Laboratory

Testing shall be performed at the expense of the Contractor by an approved commercial testing laboratory. The Contractor shall submit for approval in the Plan of Operations the name and qualifications of the laboratory to be used.

1.9 TESTING

1.9.1 General

1.9.1.1 Procedures

The Contracting Officer reserves the right to direct the location, and select the material for samples to be tested. Field moisture and density tests shall be performed when and where directed. Field in-place density shall be determined in accordance with ASTM D 1556 or ASTM D 2922. When field in-place density is determined in acordance with ASTM D 2922, field in-place moisture shall be determined in accordance with ASTM D 3017. Laboratory moisture and density tests shall be determined in accordance with ASTM D 698. When ASTM D 2922 is used, the calibration curves shall be checked and adjusted, if necessary, with ASTM D 1556. The calibration checks of both the density and moisture gages shall be made at the beginning of a job, on each different type of material encountered, or at intervals as directed by the Contracting Officer. Copies of calibration curves, results of calibration tests, and field and laboratory density tests shall be furnished to the Contracting Officer within 24 hours of conclusion of the tests as part of the Quality Control Test Reports.

1.9.1.2 Compliance

When Quality Control Test Reports indicate that compaction is not as specified, the material shall be removed, replaced and recompacted to meet specification requirements, at no additional expense to the Government. Tests on recompacted areas shall be performed to determine conformance with specification requirements. All inspections and test results shall be certified by a registered professional civil engineer. These certifications shall state that the tests and observations were performed by or under the direct supervision of the engineer; and that the results are representative of the materials or conditions being certified by the tests. The following number of tests, if performed at the appropriate times, will be the minimum acceptable for each type of operation and if, in the opinion of the Contracting Officer, compacted fill of an acceptable quality is not being obtained, increased testing rates will be required at

no cost to the Government. Tests of materials which do not meet the specified requirements will not be counted as part of the tests required.

1.9.2 Schedule of Tests (Minimum)

1.9.2.1 Moisture Density Relations

Levee embankment/fill: One for each type of levee fill material by the Standard Proctor Test (ASTM D 698). *Railroad Closure Structure: The fill material to be placed under each of the foundations shall be tested at least once per each type of foundation material by the Standard Proctor Test (ASTM D 698), prior to the construction of any concrete foundations.*

All other fills and subgrades: One for each type of fill material (ASTM D 698)

1.9.2.2 Field Density and Moisture Content

ASTM D 1556, or ASTM D 2922 and ASTM D 3017

Levee Embankment/Fill: One per 400 LF (In place measure) on each lift, or one per lift, whichever results in the greater number of tests; but, not less than 1 per day on days when fill is placed. The Contractor shall perform one (1) sand cone test (ASTM D 1556) after each ten (10) nuclear density tests performed, to check the accuracy of the nuclear gage. At least one (1) sand cone should be performed when the type of embankment fill material changes. *Railroad Closure Structure: The fill material to be placed under each of the foundations shall be tested at least twice at each foundation location in accordance with ASTM D 2922 prior to the construction of any concrete foundations.*

All subgrades: One per 1000 SY of subgrade prepared, but not less than one per location.

All hand compacted areas: One per 1000 SY of area prepared, but not less than one per location.

1.9.2.3 Unconfined Compressive Strength

For the portion of levee between stations 5N 17+00 to 31+71, for each type of fill material, two unconfined compressive strength tests will be run on laboratory compacted specimens in accordance with ASTM D 2166. One test will be performed on a specimen compacted at about optimum moisture (+/-1%). The second test will be performed on a speciment compacted at about +3% of optimum moisture.

1.9.2.4 Atterberg Limits

One Atterberg Limits ASTM D 4318 test for each laboratory moisture density shall be performed only on cohesive materials. Ten additional Atterberg Limits tests shall be performed to correlate field density and moisture content tests to laboratory moisture density relation tests. The ten additional tests shall be done on representative samples taken from in place embankment material at the locations where field density tests are performed. Results of these tests shall be submitted to the Contracting Officer within 24 hours of their completion.

1.9.2.5 Topsoil Tests

Contractor shall submit at least three (3) representative tests, for review and approval, from each source of topsoil showing full compliance with paragraphs 1.4.4 Topsoil and 3.1.3 Topsoil. The first test shall be submitted and approved prior to the first placement of the topsoil from that source. The remaining two tests shall be taken, submitted and approved at approximately the third points of the total quantity expected from that same source. Testing shall be performed by an independent reputable laboratory whose normal business includes the testing of topsoil. If the topsoil tests indicate the addition of amendments to bring the topsoil into compliance, the Contractor shall include the incorporation of the amendments in accordance with the recommendations. The cost of the tests and any soil amendments shall be at no additional cost to the Government and are considered incidental to the bid item for topsoil.

1.10 DRAINAGE AND DEWATERING

1.10.1 Control of Water

The Contractor shall control, by acceptable means, all water regardless of its source. The Contractor shall be fully responsible for disposal of the water; and shall provide all necessary means to control and dispose of the water at no additional cost to the Government.

1.10.2 Drainage

Surface water shall be directed away from excavation and construction sites so as to prevent erosion and undermining of foundations. Diversion ditches, dikes and grading shall be provided and maintained as necessary during construction. Excavation slopes and backfill surfaces shall be protected to prevent erosion and sloughing. Excavation shall be performed so that the site, the area immediately surrounding the site, and affected construction operations at the site shall be continually and effectively drained.

1.10.3 Control Measures

Control measures shall be taken as needed by the time the excavation reaches the ground water level in order to maintain the integrity of the in-situ material while the excavation is open. Dry excavations shall be maintained during fill placement and compaction. The methods to be used shall be detailed in the Dewatering Work Plan and submitted 15 days prior to starting point.

1.10.4 Ground Water

The Contractor should be aware that the ground water levels at the site are possibly high, often close to the ground surface and will vary seasonally and approximately with river levels. Any excavations may encounter significant seepage. The boring logs included with these plans and specifications should be thoroughly reviewed by the Contractor.

1.10.5 Cofferdams

The Contractor shall design temporary cofferdams and a temporary culvert bypass for the Hart Ditch Control Structure and submit a Cofferdam Work Plan. The cofferdams are to be removed after construction of the Hart Ditch

Control Structure. The bypass culvert can be removed or filled as directed in the plans and specifications. All sediment and entrained water removed from the river and bank area during cofferdam construction must be disposed of at an off-site location in accordance with all federal, state, and local laws. Sediment and entrained water may not be placed back into the river or on the banks. However, ~~water from dewatering the cofferdam to maintain dry working conditions may be discharged to the river untreated~~river water only, from the initial dewatering of the cofferdam to establish dry working conditions, may be discharged back to the river untreated. No muddy or turbid water, and no water mixed with sediment, may be discharged to the river.

1.11 EMBANKMENT/BACKFILL PROTECTION

Newly graded areas shall be protected from traffic and erosion, that may occur from any cause, prior to acceptance of the work; and shall be repaired and grades reestablished to the required elevations and slopes. All work shall be conducted in accordance with Section 01 57 20.02 10 ENVIRONMENTAL PROTECTION requirements of the contract.

1.12 MAINTAINING FLOOD PROTECTION AND DRAINAGE DURING CONSTRUCTION

Survey of Existing Berm Crest Elevations. Contractor shall survey existing berm crest elevations at 50 foot intervals throughout work limits and submit this data for review prior to construction. This data will be used to monitor that existing flood protection is maintained at all times during construction until new flood protection is completed in those areas.

The Contractor shall take appropriate measures to maintain flood protection within the project area for the duration of this contract. The existing flood protection shall be maintained until such time as the new flood barrier is constructed ~~to the elevations listed in the table below~~. This shall be addressed in the Plan of Operation by the Contractor.

~~Minimum Levee Crest Elevation During Construction~~

~~Northcote to Indianapolis~~	~~598.4~~
~~Indianapolis to Norfolk Southern RR~~	~~598.0~~
~~Norfolk Southern RR to Kennedy~~	~~597.8~~
~~Along Hart Ditch~~	~~600.0~~

The Contractor shall maintain drainage through construction of the line of flood protection across existing drainage paths such as swales, ditches, culverts, or pump outfalls, by temporary means as required to avoid increasing landward flooding of structures or private property. The Contractor shall be responsible for any increased flood damages that may be caused by construction operations as compared to preconstruction drainage conditions.

Where existing flap gated culverts are removed during construction, temporary replacement culverts shall prevent backflow from the river as needed. The Contractor shall coordinate construction of structures located on pump station outfalls and other storm sewer outlets with the local government or private entities that operate these facilities. In particular the outlets for the Baring, S. Kennedy, and Indianapolis pump stations shall be coordinated with the Hammond Sanitary District. The Contractor shall maintain their operability during construction. Bypass piping may be required during construction of new outlets.

Coffer dams and a bypass pipe will be required to construct the Hart Ditch Control structure as shown on plan sheet C-55.

There are two areas with specific restrictions that require special phased construction to prevent increased flooding impacts. These areas include:

1. The "no fill area" between the concrete portion of the Hart Ditch Control Structure and the floodwall along the south side of the Little Calumet River - No fill or any other blockage to flow shall be placed in the no fill area as shown on plan sheet C-55 until all other Stage V-2 floodwalls, levees and drainage structures through the line of protection are completed. At that time, the tie back berm that connects the concrete portion of the Hart Ditch Control Structure and the floodwall along the south side of the river can be constructed.

2. A 100 foot long gap shall be left between stations 5S 51+00 and 5S 69+00, until the remainder of the levee has been constructed. Within the gap the levee shall not be built above elevation 597. The location of the 100 ft gap must be placed within the provided station range. The gap allows water to flow into the Wicker Park Golf Course during a flood event. This gap shall be filled after the no fill area is filled as described in the above paragraph.

These two items must be constructed in the order presented above, but not until all other items of the Phase V-2 project are constructed and functional. Constructing any of these items earlier in the construction sequence would cause increased flood levels and shall not be allowed.

1.13 CONSTRUCTION LIMITS

The Contractor shall perform all work within the construction limits as shown on the drawings. Notice shall be given to INDOT's Lake County District Director at least one week before commencing work on INDOT right-of-ways.

PART 2 PRODUCTS

2.1 2.1 Ballast

All ballast material shall be submitted to and approved by the Contracting Officer prior to delivery to the site. Ballast material type (granite or limestone) shall be as specified on the plans. If unspecified, granite is to be used, unless an alternate material is approved by the Contracting Officer.

Prepared ballast shall be crushed stone composed of hard durable particles, free from objectionable amounts of deleterious substances and shall meet the following specifications:

a. Gradation, as determined using ASTM C 136. One test shall be performed each 1000 tons or fraction thereof of material loaded for delivery.

Ballast shall comply with the modified AREA gradation #3, as shown in the table:

Percent Passing Standard Sieve Size by Weight

Type	*2 1/2"*	*2"*	*1 1/2"*	*1"*	*3/4"*	*1/2"*	*3/8"*	*#4*	*No. 200*

Percent Passing Standard Sieve Size by Weight

AREA #3 Mod	*100*	*95-100*	*30-65*	*0-15*	*---*	*0-5*	*---*	*---*	*0.5 max*

Note: All Gradation Testing shall be done according to ASTM C 136

2.2 Ballast Quality Requirements

a. Clay lumps and friable material - percentage as determined by ASTM C 142 shall not exceed 0.5%.

b. Material finer than #200 sieve - percentage as determined by ASTM C 117 test shall not exceed 0.5%.

c. Absorption - as determined by ASTM C 127 shall not exceed 1.0%.

d. Sodium sulfate soundness - average weighted loss after five (5) cycles shall not exceed 2.5%, as determined by ASTM C 88.

e. Resistance to degradation - as determined by ASTM C 535, grading type 2, (Los Angles Abrasion Test 535-2) shall not result in a wear percentage greater than 27.5% for granite, or 25.0% for limestone.

f. Flat and/or elongated particles - as determined by U.S. Army Corps of Engineers' Test COE CRD-C 119, using a 3:1 ratio shall not exceed 5.0%.

g. Rock cementing value (limestone only) shall not exceed 200 psi. The test shall conform to the following procedure:

1. Take 350 grams of stone dust passing #100 mesh sieve. Dust is obtained by running approximately one (1) quart pea size stone chips (retained on #4 sieve, passing 3/8" sieve) in standard Deval Abrasion machine for 10,000 revolutions, or 5 to 6 hours at 30 to 33 rpm with three (3) standard ASTM C 535 balls.

2. Place dust on glass surface, make a crater, add approximately 70 cc water, cover and allow to absorb for one (1) minute. Wearing rubber gloves, mix roll, and knead for five (5) minutes to obtain a stiff dough. Adjust amount of water to obtain this. Place in an air tight can for two (2) hours.

3. Mold ten (10) standard 1" diameter x 1" high cylinders. Weigh about 30 to 31 grams stiff dough (or sufficient to obtain cylinders 1" plus or minus 1/32" high) in balance. Place mold and compress with 1475 lbs (1877.5 psi), holding load constant for one (1) minute.

4. Air Dry cylinders for 20 hours at room temperature, then for four (4) hours in hot air bath at 212°F. Place immediately in a desiccator for 20 minutes and then test in compression testing machine with pivoted or ball socket head for uniform load distribution. Load is applied at 600 lbs. per minute.

5. Report average crushing strength in psi as cementing value of stone. Calculation: PSI = Load / 0.7854.

h. Contractor shall furnish a certification of compliance stating that the material meets or exceeds the requirements of the specification. For sources not currently approved by the Contracting Officer, the Contractor shall provide independent certification as required by the Contracting Officer.

i. Graded aggregates subject to on site stockpiling prior to placement shall be reblended as directed by the Contracting Officer to ensure compliance with the original gradation specified.

PART 3 EXECUTION

3.1 STRIPPING

After inspection and approval of cleared and grubbed areas, stripping may proceed.

3.1.1 Levee Foundation

The area within the limits of the levee foundation shall be stripped to remove heavy growth of grasses, weeds, other vegetation, and surface soils to a depth not to exceed 12 inches as shown on the drawings.

3.1.2 Borrow Areas

The Contractor shall remove heavy growth of grasses, weeds, other vegetation, and topsoil.

3.1.3 Topsoil

Stripped materials suitable for use as topsoil, shall be spread on areas already graded and prepared for topsoil; or when so specified topsoil shall be transported and deposited in stockpiles convenient to areas that are to receive application of the topsoil later, or at locations indicated or specified by the Contracting Officer. Topsoil shall be kept separate from other unusable excavated materials, brush, litter, objectionable weeds, roots, stones larger than 3 inches in diameter, and other materials that would interfere with planting and maintenance operations. Unusable material shall be removed and properly disposed of.

3.2 EXCAVATION

3.2.1 General

Excavation shall consist of removal of every type of material encountered within the limits of the project in preparing the foundations to the lines, grades, and elevations indicated on the drawings as specified herein, or as approved by the Contracting Officer. Excavation shall consist of removal of material for the inspection trenches, structures, and for ditches and swales, to the sections indicated on the drawings, or as approved by the Contracting Officer. Excavation also includes removal of objectionable materials; and obtaining required fill materials from borrow areas. Care shall be exercised by the Contractor not to excavate below the grades shown on the drawings, or as approved by the Contracting Officer. Grading shall be in conformity with the typical sections shown, and the tolerances specified in paragraph 3.12 GRADE TOLERANCES. Any excessive excavation, as determined by the Contracting Officer, due to the fault or negligence of the Contractor, shall be backfilled to grade with satisfactory, thoroughly compacted material to grades shown on the drawings. Corrective measures shall be done by and at the expense of the Contractor. During construction, excavation and fill procedures shall be performed in a manner and sequence that will provide proper drainage at all times and in accordance with EM 385-1-1 standards. Excavation areas shall be kept free from water during placement of pipe, concrete, earth fill, and backfill.

3.2.2 Disposition of Satisfactory Materials

Excavated materials which are suitable to construct the embankment or other fills shall be placed directly therein or stockpiled for future use within the limits of the work, as shown on the drawings, unless otherwise directed by the Contracting Officer.

3.2.3 Disposition of Unsatisfactory Materials

Materials encountered within the limits of the work which are unsatisfactory for use in the completed project shall be hauled off site and disposed of at an approved commercial disposal site or as directed by the Contracting Officer. Unsatisfactory materials shall be excavated below grade and replaced with satisfactory materials as directed by the Contracting Officer.

3.2.4 Excavation for Structures and Utilities

Excavation for structures and utilities shall be performed within the work limits shown on the drawings, or as modified by the Contracting Officer. *Excavation associated with the Railroad Closure Structure shall be done only after coordination and permission is obtained from Norfolk Southern Railroad and the Contracting Officer. The excavation shall be performed to the limits shown and to the planned foundation level shown on the drawings. Any unsatisfactory material encountered at the planned foundation level shall be removed to the level as directed by the Contracting Officer. The Contractor is required to maintain one track in operation at all times during the construction process and shall provide any necessary excavation support, staging requirements and bracing to maintain the one operational track.*

3.2.5 Drainage Ditches and Swales

Drainage ditches and swales and culvert outlet ditches and swales shall be excavated accurately to the cross-sections, lines, grades, and elevations shown on the drawings. Care shall be taken not to excavate ditches and swales below grades specified on the drawings. Satisfactory material excavated from drainage ditches and swales shall be stockpiled as covered in subparagraph 3.2.2, unless otherwise directed by the Contracting Officer. Unsatisfactory materials excavated from drainage ditches and swales and any excess material shall be removed from the site as covered in in subparagraph 3.2.3, or as directed by the Contracting Officer. The Contractor shall maintain all drainage ditch and swale excavations free from detrimental quantities of leaves, brush, sticks, trash, and other debris until final acceptance of the work. Any fence removed for the ditch and swale excavation shall be replaced with similar construction.

3.2.6 Inspection Trench

An inspection trench will be installed for the total length of the levee as shown on the plans. This work shall be considered incidental. The inspection trench will be used to locate any undesirable underground features such as near surface pipes, buried debris, unsatisfactory foundation materials, etc. Any pipes, tiles, conduits, buried debris, or other unsatisfactory foundation materials encountered shall be removed from within the footprint of the levee or plugged as directed by the Contracting Officer. Excavation and backfilling of the inspection trench shall be performed in a continuous operation. The Contractor shall notify the Contracting Officer 48 hours prior to start of this work, so that the

Contracting Officer's Representative may be present during excavation and backfilling work. During construction of the inspection trench, the Contractor shall immediately notify the Contracting Officer's Representative in the event that soil conditions encountered are significantly different from those shown in the boring logs. Of particular concern are open work gravels, whether or not they are water bearing, or other granular materials, located immediately beneath the proposed levee fill, especially in the area of Optimist Lake. The Contractor shall not place impervious levee fill in these areas without the expressed approval of the Contracting Officer's Representative.

3.2.6.1 Inspection Trench Type

The trenches shall be excavated to the dimensions indicated below unless otherwise indicated on the drawings. The slit inspection trench shall be a minimum of 1.5 feet wide and 6 feet deep. If a slit trench cannot be maintained stable due to soil conditions, the trench shall be expanded to permit inspection by the Contracting Officer's Representative.

3.2.6.2 Inspection Trench Backfill

After inspection by the Contracting Officer's Representative and upon authorization, the inspection trench may be backfilled. Backfilling shall be completed at least 200 feet in advance of the embankment construction. The excavated material may be used to backfill the trench if it is considered to be satisfactory under subparagraph 1.3.1 and does not include granular material. All inspection trench backfill shall be compacted to a density comparable to that of the surrounding soil. Unsatisfactory material as defined in subparagraph 1.3.2 shall be removed and replaced with impervious levee material as defined in subparagraph 1.3.3 when so directed by the Contracting Officer.

3.2.7 Utilization of Excavated Materials

All unsatisfactory materials removed during excavation shall be disposed of by the Contractor in an approved commercial disposal site. No satisfactory excavated materials shall be wasted without specific written authorization. Satisfactory materials may be stockpiled in the staging areas until the material is incorporated into the completed work. Upon completion of the work, all excess excavated materials shall be removed from the project and properly disposed. No excavated materials shall be disposed in such a manner as to obstruct the flow of any stream, or be detrimental to the completed work in any way.

3.3 SELECTION OF BORROW MATERIAL

Borrow material shall be satisfactory material, as defined in paragraph 1.3.1, selected to meet the requirements and conditions for the particular fill for which it is to be used. Borrow material shall be obtained from a commercial borrow site or from Contractor-chosen borrow site. The Contractor shall bear all the expense of developing the borrow site. Contractor shall not bring material to the job site until all required submittals and reports pertaining to borrow material have been approved in writing by the Government. If the Contractor brings material to the job site without first obtaining written approval from the Government, the materials shall be removed within forty-eight (48) hours of receipt of a direction from the Government to remove the material from the job site. The Contractor shall not be entitled to any additional increase in the contract price or any additional time for completion of the contract

associated with the removal of the materials notwithstanding any other provision in the contract. If the Contractor has not completed removal of the material from the job site within forty-eight (48) hours of receipt of a direction from the Government to remove the material for the job site, this failure shall constitute a material breach of the contract and entitle the Government to all appropriate remedial actions including, but not limited to, termination for default.

Contractor shall comply with the borrow/disposal sites and quarries requirements in SECTION 01 10 00.00 03 GENERAL PROVISIONS.

3.3.1 Borrow materials from commercial borrow source

The contractor shall submit for approval, prior to importing borrow material from a commercial borrow source, the name of the borrow site or quarry and the supporting documentation required in SECTION 01 10 00.00 03 GENERAL PROVISIONS. The commercial borrow site or quarry shall be in the business of providing borrow and whose materials meet all applicable federal, state, and local environmental statutory and regulatory requirements.

3.3.2 Environmental Testing of Borrow Materials

Contractor shall submit for approval a request to utilize any given borrow source. Submission for approval includes a soil sampling plan and an environmental soil sampling report. Contractor shall not bring material to the job site until the soil sampling plan and environmental soil sampling report, for any given source, are submitted and have been approved in writing by the Government. The Contractor shall remove material brought to the job site that does not have written Government approval in accordance with the provisions set forth in paragraph "Selection of Borrow Material". Any costs associated with deviating from the requirements in this section will be the Contractors expense.

Material obtained from any borrow source will be considered acceptable under this part if the values obtained by the analysis of all parameters specified in paragraph "Soil Sampling Plan for Borrow Source" are below values included in Tables 1 attached. If the values obtained by the analysis of one or more of the parameters set forth in Table 1 are exceeded, the material from that source will be deemed unsatisfactory and may not be used for this contract. Analytical results shall not be averaged for purposes of determining compliance with the requirements set forth in Table 1.

Materials classified as commercially manufactured stone or sand, or topsoil, do not require the environmental testing stated in this paragraph. Materials obtained from the project site do not require the environmental testing stated in this paragraph.

3.3.2.1 Soil Sampling Plan for Borrow Source

The Contractor shall address the following, at a minimum, in the Soil Sampling Plan for any given source of material: location of the material source, proposed sample locations (including a map), volume of borrow material, sample collection and handling procedures, laboratory selected, laboratory certifications, parameters to be analyzed, analytical methods, laboratory reporting limits, QA/QC requirements, chain of custody procedures, the quality assurance project plan (QAPP), data quality objectives, data validation, and reporting requirements. The data quality

objectives for the soil sampling are to detect contamination and produce results that are at or below the values for all parameters included in Table 1 attached. If a phase I or phase II environmental site assessment of the borrow site exists, this information shall be submitted as part of the sampling plan. The Contractor shall use and submit the name and qualifications of a qualified environmental professional who will conduct all sampling, analysis, and reporting. The laboratory selected to perform the laboratory analysis must comply with the requirements of the DOD QSM and shall be certified through the National Environmental Laboratory Accreditation Conference/National Environmental Laboratory Accreditation Program (NELAC/NELAP) certification program.

The Contractor shall sample and test the borrow material for all of the parameters listed in Tables 1 using SW-846 methodology. Total metals analysis shall include the following metals: Antimony, Arsenic, Barium, Beryllium, Cadmium, Chromium, Copper, Mercury, Nickel, Silver, Lead, Zinc, and Selenium. Contractor shall collect at least one composite sample for every ½ acre of property where borrow will be obtained, from any given borrow location. A minimum of three composite samples shall be collected for any given borrow location. Contractor shall composite each individual sample to represent the vertical extent of the borrow area. Contractor shall distribute samples to adequately cover the horizontal extent of the borrow area. The proposed sample locations shall be included in the soil sampling plan.

3.3.2.2 Environmental Soil Sampling Report for Contractor-chosen borrow source

After completing soil sampling and testing from any given borrow source, the Contractor shall prepare and submit an environmental soil sampling reportenvironmental soil sampling report for Governmental approval. The report shall consist of, at a minimum: a narrative of information obtained during sampling, copy of field notes, identification of sample locations from borrow material, copies of chain of custody forms, copies of laboratory data, a table comparing the analytical results to the contract requirements specified in paragraph "Environmental Testing of Borrow Materials", and a discussion of results and conclusions. The report shall be called "final" after approval is made by the Government. The Contractor is responsible for maintaining accurate records to support information for development of the borrow source. Only after receiving written Government approval of the environmental soil sampling report for any given borrow source will the Contractor be allowed to import soil material from that source to the contract job.

3.4 EMBANKMENT/FILL FOUNDATION PREPARATION

3.4.1 Foundation Preparation

All foundation work shall be completed at least 200 feet in advance of the levee embankment construction.

3.4.2 Placement

Satisfactory materials shall be used in bringing fills and backfills to the lines and grades indicated and for replacing unsatisfactory materials. Backfilling shall not begin until construction below finish grade has been approved. Backfill shall be brought to the indicated finish grade. Backfill shall not be placed in wet or frozen areas. Each layer of fill and backfill shall be compacted to not less than the percentage of maximum

density and moisture content specified. After excavation or stripping of the embankment/fill foundation, and excavation and backfilling of the inspection trench to the extent indicated on the drawings or otherwise required, cavities or depressions shall be broken down, where so directed, to flatten out the slopes. Immediately prior to the placement of embankment/fill material, the entire earth surface on or against which embankment/fill is to be placed, except areas which were occupied by roadways within the levee foundation, shall be thoroughly broken to a depth of 12 inches. Existing pavement and subbase within the levee foundation shall be removed from the embankment foundation. All areas shall be compacted to a minimum 95 percent maximum dry density ASTM D 698.

3.4.3 Fill Locations

If for any cause the foundation, or other surface that is to receive levee embankment/fill, is such that, in the opinion of the Contracting Officer, a plane of seepage or weakness might be induced, it shall again be thoroughly scarified before placing the material thereon. All scarifying and breaking of ground surface shall be done parallel to the centerline of the levee.

3.4.4 Foundation within the Levee Footprint

The foundation within the levee footprint shall be cleared of unsatisfactory material as defined in subparagraph 1.3.2. Ponded water greater than 12 inches deep shall be drained before placement of embankment/fill. The contractor will be permitted to use the displacement method described below to construct an earthen cofferdam to permit dewatering of the levee foundation, where feasible. This method will not be permitted in the Optimist Lake area. Where surficial granular fill is encountered within the levee footprint, the fill shall be removed from within the levee footprint and replaced with compacted impervious levee fill. Where highly plastic or soft soils are present near or at the surface within the levee footprint, the material shall be removed and replaced with compacted impervious levee fill.

3.4.5 Fill Material

Where fill must be placed in standing water not greater than 12 inches deep, or where foundation conditions will not support equipment for placement of an 8 inch lift, the Contracting Officer may waive the maximum 8 inch loose lift thickness restriction for the first lift of the embankment/fill. These conditions may exist in areas inundated with ponded water, marshes, secondary river channels, or wetlands. When approved by the Contracting Officer, and where material must be placed in water, the levee shall be constructed by pushing the embankment/fill material ahead of the equipment so as to displace the water. Water must not be entrapped in or behind the embankment/fill material. Fill should be advanced with a V-shaped leading edge so that the center of the fill is most advanced, thereby displacing soft soil and/or water to both sides. In areas where placement is along an existing embankment, displacement of soft soil and/or water shall be away from the embankment. Fill shall be placed until it reaches an elevation 1.0 foot above water surface, or until a stable fill surface is obtained. The Contractor will have achieved a stable surface when the fill can be compacted to the extent that the top 8 inches meet the compaction requirements of subparagraph 3.7.1.3 "Compaction". To facilitate compaction, fill placed in standing water shall not exhibit water contents greater than two (2) percentage points above the optimum moisture content. Placement of fill in standing water shall be specifically addressed in the Plan of Operation.

3.4.6 Staged Construction

Borings indicate that portions of the foundation soils beneath the levee alignment between stations 5N 17+00 to 31+71 are soft. These soils may cause stability problems during or immediately after construction. To minimize the risk of levee failure in this area the Contractor shall build this portion of the levee using staged construction. The levee shall be constructed to half of the design height as shown on the drawings. This partial levee section will then be allowed to consolidate for a period of not less that 120 calendar days before the remaining levee fill is placed. The partial levee section will be constructed to its full width as shown on the drawings. Fill placed within the first half of the design height may be compacted at water contents up to +3 percent over optimum provided that the required density can be achieved and the material possesses a minimum shear strength of 450 psf. The Contractor has the option to perform interim surveys at the beginning and end of the consolidation period for the purpose of establishing levee fill quantities. These optional surveys will be at no additional cost to the Government and are considered as an incidental cost to be included in the bid items for levee fill.

3.4.7 Preload Embankment

Preload embankments have been specified to surcharge the soft foundation soils at the locations shown before the structure is constructed. Wick drains and a granular blanket will be installed, as specified in Section 33 46 26.19, before the fill for the preload embankment is placed. In addition, a settlement gage shall be installed beneath the preload embankment to monitor the foundation settlement. It is estimated that six (6) months will be required to surcharge the soft foundation soils with wick drains installed as shown. The surcharge period will be considered completed after the time-settlement curve based on the settlement gage readings indicates the primary consolidation of the foundation soils is essentially complete. However, the full surcharge shall be applied for a minimum of three (3) months, regardless of the observed settlement. The settlement data shall be submitted to the COR for review. Removal of the preload embankment shall not be performed without authorization of the COR.

Approx. Location	Description	Anticipated Settlement
STA 5S 73+00	48" Gatewell (Tri-State)	4.4"
STA 6N 12+60	24" Culvert (6-3C)	5.3"
STA 6N 22+00	24" Culvert (6-5C)	7.5"
STA 6N 34+40	12" Culvert (6-7C)	7.6"

3.5 FROZEN GROUND

3.5.1 Fill Placement

No fill shall be placed upon natural ground or previously placed fill which is frozen or covered with snow or ice.

3.5.2 Fill Material Conditions

Under no circumstances shall frozen earth, snow, or ice be placed in the embankments/fills.

3.6 EMBANKMENT MATERIALS

The levee and preload embankments shall be constructed of earth material obtained from borrow areas as prescribed in paragraph 3.3 SELECTION OF BORROW MATERIAL, having the characteristics defined in subparagraph 1.3.3.

The granular blanket installed beneath the preload embankment shall be constructed of clean, natural granular material, and filter fabric. The material for the granular blanket shall be course aggregate, as described in Section 32 11 23.00 GRADED CRUSHED AGGREGATE BASE COURSE.

The filter fabric to be used for the preload embankment shall be as specified in Section 31 05 19.13 GEOTEXTILES USED AS FILTERS AND UNDERLAYS.

3.7 EMBANKMENT CONSTRUCTION

3.7.1 Compacted Impervious Levee Embankment

The compacted levee embankment shall be built to the grades and elevations shown on the drawings.

3.7.1.1 Equipment

A.) Compaction of cohesive soils shall be accomplished by sheepsfoot rollers. The Contractor has the option of using either self-propelled or tractor-drawn sheepsfoot rollers. The tractor drawn rollers shall consist of a heavy duty double drum unit with a drum diameter not less than 60 inches and an individual drum length of not less than 60 inches. The drums shall be water, or sand and water ballasted. Each drum shall have staggered feet uniformly spaced over the cylindrical surface such as to provide approximately three tamping feet for each two square feet of drum surface. The tamping feet shall be seven (7) to nine (9) inches in clear projection from the cylindrical surface of the roller and shall have a face area of not less than five (5) nor more than seven (7) square inches. The roller shall be equipped with cleaning fingers, so designed and attached as to prevent the accumulation of material between the tamping feet, and these cleaning fingers shall be maintained at their full length throughout the periods of use of the roller. The weight of the roller shall not be less than 3500 pounds per foot of linear drum length weighted, and shall not be more than 2000 pounds per foot of drum length empty. The two drums comprising one roller unit shall be yoked such that they will oscillate when traversing uneven surfaces. The design and operation of the roller shall be subject to the approval of the Contracting Officer who shall have the right at any time during the prosecution of the work to direct such repairs to the tamping feet, minor alternations in the roller and variations in the weight as may be found necessary to secure optimum compaction of the earth fill materials. The Contractor may be required to add ballast to the roller to the maximum capacity specified by the manufacturer of the roller. The roller shall be operated at a speed not to exceed 3.5 miles per hour. If the roller is drawn by a rubber-tired tractor, the use of the rubber-tired tractor shall be discontinued if the tires leave ruts that prevent uniform compaction by the tamping roller.

B.) At the option of the Contractor, self-propelled sheepsfoot rollers may be used in lieu of tractor-drawn sheepsfoot rollers. Self-propelled rollers exceeding the empty weight requirement may be used provided that by the substitution of tamping feet having a face

area not exceeding 14 square inches, the nominal foot pressure on the tamping feet of the self-propelled roller can be adjusted to approximate the nominal foot pressure of the towed roller for the particular working condition required for the towed rollers. For self-propelled rollers, in which steering is accomplished through use of rubber-tired wheels, the tire pressure shall not exceed 40 pounds per square inch. Self-propelled rollers shall be operated at a speed not to exceed 3.5 miles per hour. Hand compactors shall be used as directed by the Contracting Officer.

C.) The Contracting Officer may approve a specific sheepsfoot roller provided it does not deviate significantly from the preceding description, and can achieve the required compaction. Trucks, dozers, and other earth moving equipment shall not be used as substitutes for a sheepsfoot roller.

3.7.1.2 Placement

A.) The Contractor shall submit for approval to the Contracting Officer a written procedure with sketches of their placement and procedure prior to the start of embankment placement. This procedure shall be included in the Plan of Operations. The gradation and distribution of materials throughout the compacted embankment shall be such that the embankment will be free from lenses, pockets, streaks, and layers of material differing substantially in texture or gradation from surrounding material.

B.) After dumping, the materials shall be spread by bulldozers or other approved means over the embankment areas. Layers shall be started full out to the slope stakes; and shall be carried substantially horizontal with sufficient crown or slope to provide satisfactory drainage during construction. Unless otherwise directed, the thickness of impervious layers before compaction shall be not more than 8 inches. When in the opinion of the Contracting Officer, the surface of any compacted layer is too smooth to bond properly with the succeeding layer, it shall be scarified to the satisfaction of the Contracting Officer before the succeeding layer is placed thereon.

C.) During the dumping and spreading processes, the Contractor shall maintain at all times an adequate workforce to remove all stones greater than 3 inches in maximum dimension, roots, and debris from all embankment materials. Stones, roots, and debris removed from the embankment shall be removed from the site. Removal and disposal of such stone, roots and debris as specified herein will not be paid for separately; but all cost in connection therewith will be considered a subsidiary obligation of the Contractor and will be included in the applicable contract price. The entire surface of any section of the embankment under construction shall be maintained in such condition that construction equipment can travel on any part of any one section. Ruts in the surface layer shall be filled satisfactorily before compacting.

D.) After a layer of impervious embankment material has been dumped and spread, it shall be disked to break up and blend the embankment materials. Disking shall be performed with a heavy disk plow or other approved disk, to the full depth of the layer. If one pass of the disk does not accomplish the breaking up and blending of materials, additional passes of the disk may be required; but in no case will more than 3 passes of the disk on any one layer be required for this

purpose.

3.7.1.3 Compaction

A.) Each lift of impervious embankment shall be compacted to a minimum of 95 percent maximum dry density (Standard Proctor Test) within plus or minus 2 percent of optimum moisture as determined by the moisture density relation ASTM D 698.

B.) If in the opinion of the Contracting Officer or Contracting Officer's Representative, the material is too dry for proper compaction, the Contractor will be required to pre-wet the material, or to uniformly distribute sufficient moisture in each layer before rolling to permit the desired compaction. Material that is too wet shall be spread on the embankment and permitted to dry, assisted by disking, if necessary.

3.7.1.4 Preload Embankment

The preload embankment shall be constructed in accordance with these specifications and as shown on the drawings. After the surcharge period is completed, but before the embankment fill is placed, the preload material, granular blanket and filter fabric shall be removed in its entirety.

3.7.1.5 Reading of Settlement Gages

Gage readings taken in conjunction with preloading activities shall be performed as follows. The Contractor shall read the settlement gage before placing fill, before and after the addition of each new section of riser pipe, and immediately upon completion of fill placement. After completion of fill placement, the Contractor shall take four (4) readings at weekly intervals. Thereafter, readings shall be taken monthly. The reading period shall continue until the settlement gage readings indicate that primary consolidation of the foundation material is substantially complete. The COR shall review the settlement data. When the settlement stops, the COR will direct the Contractor to stop taking the readings, and proceed with construction.

3.7.2 Dressing

The entire levee embankment, including topsoil where required, shall be brought to not less than the prescribed gross cross section at all points. The surface shall be finished to a smoothness suitable for the application of turfing materials. Vertical tracking on side slopes should be used to minimize erosion rate.

3.8 SPREADING TOPSOIL

Topsoil shall be distributed and spread uniformly on the levee to the average thickness of 6 inches unless shown otherwise on the plans. Topsoil shall be spread such that planting can proceed with little additional soil preparation or tillage. Surface irregularities resulting from topsoiling or other operations shall be leveled to prevent depressions. Compacted soil shall be slightly scarified or disced to assure bond.

3.9 ANNULAR BACKFILL

Annular backfill for culverts through the levee shall be placed as shown on the drawings.

3.10 STRUCTURAL BACKFILL

3.10.1 Structural Backfill Material

Structural backfill shall consist of refill around structures. In areas below existing grade where impervious fill is not indicated, the backfill may be any satisfactory material. Impervious fill shall be placed as shown on the drawings. Structural backfill shall not be placed around or adjacent to a structure until the structure is completed, or until a specified time interval has elapsed after completion.

3.10.2 Placement

Backfill shall be placed in 6-inch thick loose lifts and thoroughly compacted. Unless otherwise directed, the placing and compacting of all backfill material and the control of its moisture content shall conform to the applicable provisions of paragraphs 1.3, 1.6, 3.7.1.2, and 3.7.1.3. Heavy compaction equipment shall not be permitted to operate within three (3) feet of structures, conduit sides, or conduit tops. Within this restricted area, and other areas where rollers can not be used, the material shall be compacted by means of hand operated power tampers. Unless otherwise specified, the materials shall be placed and compacted to obtain 95 percent maximum dry density as determined by ASTM D 698.

3.11 CROSS SECTIONS

Unless otherwise specified, the dimensions and slopes shall conform to the applicable "Typical Sections" shown on the drawings.

3.12 GRADE TOLERANCES

All levee embankments shall be constructed to the lines, grades and cross-sections shown on the drawings. At all points a tolerance of plus five-tenth (5/10) of one foot above, and minus zero feet below the prescribed grade will be permitted in the final dressing, provided that any excess material is so distributed that the crown of the levee drains riverward; and that there are no abrupt humps or depressions in surfaces or bulges in the width of the crown. However, this tolerance above grade may be modified at locations where, in the opinion of the Contracting Officer, such modifications will not impair the design or appearance of the structure. For topsoil, a tolerance of 1 inch above the thickness as shown on the drawings will be permitted. No tolerance will be allowed for the drainage ditchs and swales.

3.13 SLIDES

In the event a slide occurs on any part of the levee during construction or after its completion, but prior to its acceptance, the Contractor shall, upon written order of the Contracting Officer, cut out and remove the slide from the levee and then rebuild that portion of the levee in accordance with the applicable provisions of paragraphs 1.3, 1.6., 3.6, 3.7, and 3.10. If the slide is caused through fault of the Contractor, the foregoing operations shall be performed at no cost to the Government. If the slide is due to no fault of the Contractor, the yardage ordered removed will be paid for as specified in SECTION 01 22 00.00 10, and the yardage replaced will be paid for as specified in SECTION 01 22 00.00 10, in addition to any payment due to the Contractor for materials previously placed.

3.14 DITCHES AND DEPRESSIONS

All sloughs, old pits, ditches, or depressions beyond the limits of the levee foundation within the permanent rights-of-way, when required by the Contracting Officer, shall be filled to the natural surface of the ground with approved satisfactory material. The material for the fill shall be placed in layers or lifts not to exceed 12 inches in thickness. The only compaction required will be that obtained by the necessary spreading and dumping operations, except that the equipment shall be so operated that the tracks are distributed evenly over the surface of each lift.

3.15 EXCAVATION, EMBANKMENT, AND PREPARATION OF SUBGRADE FOR ROADWAYS

3.15.1 Subgrade Preparation

Subgrade shall be shaped to lines, grades, and cross-sections shown on the drawings; and the top 12 inches compacted to a minimum of 95 percent maximum dry density ASTM D 698. This operation shall include plowing, discing, and any moistening or aerating required to obtain specified compaction. Unsatisfactory material shall be removed and replaced with approved satisfactory material as directed by the Contracting Officer. Low areas resulting from removal of unsatisfactory material shall be brought up to required grade with approved satisfactory materials; and the entire subgrade shall be shaped to lines, grades, elevations, and cross-sections shown on the drawings, and compacted as specified. The elevation of the finished subgrade shall not vary more than 0.10 foot from the established grade and cross-section. Subgrade shall be tested according to paragraph 1.8.2.

3.15.2 Embankment

3.15.2.1 Earth Embankment

Earth embankments shall be constructed in accordance with applicable provisions in paragraphs 3.4 through 3.14 of this specification. If conditions warrant, special fill materials may be used in the embankment. However, a core of impervious levee embankment material of the same cross sectional configuration as the levee must continue through the line of protection.

3.15.2.2 Compaction

Compaction for clayey soils shall be accomplished by sheepsfoot rollers, as described in subparagraph 3.7.1.3. Compaction of any granular fill shall be accomplished by vibratory rollers, as described in paragraph 3.5, BACKFILLING, in Section 33 40 00.00 STORM-DRAINAGE SYSTEM. Measured compaction shall meet the 95 percent of maximum dry density (Standard Proctor test) as specified in subparagraph 1.3.5. Compaction shall be tested according to paragraph 1.8.

3.15.3 Shoulder Construction

Shoulders shall be constructed of satisfactory or borrow materials, or as otherwise shown or specified herein. Shoulders shall be constructed as soon as possible after adjacent paving is completed. Compaction shall be accomplished by sheepsfoot rollers. Shoulder construction shall be done in proper sequence in such a manner that adjacent ditches will be drained effectively; and that no damage of any kind is done to the adjacent completed pavement. The completed shoulders shall be true to alignment and

grade, and shaped to drain in conformity with the cross-sections shown on the drawings.

3.15.4 Finishing

The surface of all roadway excavations, embankments, and subgrades shall be finished to a smooth and compact surface in accordance with the lines, grades, cross-sections, and elevations shown on the drawings. The degree of finish for all graded areas shall be within 0.1 foot of the grades and elevations indicated. Ditches and swales shall be finished in a manner that will result in effective drainage. The surface of areas to be turfed shall be finished to a smoothness suitable for the application of turfing materials.

3.15.5 Subgrade and Embankment Protection

During construction, embankments and excavations shall be kept shaped and drained. Ditches and drains along subgrade shall be maintained in such a manner as to drain effectively at all times. The finished subgrade shall not be disturbed by traffic or other operations; and shall be protected and maintained by the Contractor in a satisfactory condition until subbase, base, and pavement are placed. The storage or stockpiling of materials on finished subgrade will not be permitted. No subbase, base course ballast, and or pavement shall be laid until the subgrade has been checked and approved. In no case shall subbase, base, surfacing, or pavement be placed on a muddy, spongy, or frozen subgrade.

3.15.6 Roads

At locations where access roads to fields or buildings are destroyed because of the work required under this contract, the Contractor shall provide temporary roads, if directed by the Contracting Officer, to give access to fields and buildings during the construction period. Such facilities shall be removed after construction is complete, and replaced with permanent access roads to the extent required by the Contracting Officer.

3.15.7 Ramps

Road ramps and crossings shall be constructed at the locations shown on the drawings by placement of compacted impervious fill as specified in paragraph 3.7 EMBANKMENT CONSTRUCTION.

3.16 QUALITY CONTROL

3.16.1 Quality Control System

The Contractor shall establish and maintain quality control for work under this section to assure compliance with contract requirements; and maintain records of his quality control for all construction operations including, but not limited to the following:

(1) Foundation materials;
(2) Foundation preparation;
(3) Layer thickness;
(4) Moisture control;
(5) Compaction;
(6) Lines, grades, and tolerances; and
(7) Test results.

3.16.2 Records

A copy of the records of inspections and tests, as well as the records of corrective actions taken, shall be furnished to the Government as directed by the Contracting Officer. See Section 01 45 04.00 03, CONTRACTOR QUALITY CONTROL.

3.17 Railroad Ballast and Trackwork

3.17.1 General

All ballast shall be placed in accordance to project plans, using standard railroad construction practices and equipment. Changes or substitutions must be approved in advance of installation by the Contractor. Ballast that is contaminated by foreign material during stockpiling or construction shall not be used in track construction. Contaminated material shall be removed prior to tamping. Ballast that becomes segregated by field stockpiling will be reblended to specification prior to use in track construction. Ballast section depth, width, and slope shall conform to typical section(s) shown on the plans. The Contractor will be required to add or remove ballast from the track section if deemed necessary by the Contracting Officer.

Damage to completed ballast layers/section caused by the Contractor during subsequent operations shall be repaired by the Contractor at his expense prior to acceptance of work by the Government. This shall include, but is not limited to, rutting, inter-mixing of foreign materials, or disturbance of finished shoulders.

Any Contractor furnished material which is placed and then subsequently determined through material testing to not be in compliance with the Specifications shall be removed as directed the Contracting Officer at no cost to the Government.

3.17.2 Placement of Backfill Material

In a fill section, after stripping topsoil and organic material, the entire area where the embankment is to be constructed shall be plowed and scarified for a minimum depth of 6 inches. This surface and all future fill layers shall be compacted to 95 percent of maximum density per Standard Proctor in accordance ASTM D 698 or 90 percent of maximum density per Modified Proctor in accordance with ASTM D 1557, except that a minimum of the top 2 feet of fill shall be compacted to 100 percent Standard Proctor. The top 12 inches of the subgrade in cuts shall be plowed, scarified and compacted to 100 percent Standard Proctor. The Contracting Officer shall determine the ASTM test method to be used after review of the soil analysis.

The Contractor shall notify the Contracting Officer when fill layers are ready for compaction testing. Successive layers shall not be placed prior to compaction testing. The Contractor shall not make any claims for delay to work due to compaction testing.

Field testing for density control for fill and subgrade materials shall be made in accordance with the requirements of ASTM D 1556 and ASTM D 2922 using a portable nuclear density testing device with field test locations selected by the Contracting Officer. All soil tests shall be performed at the expense of the Contractor. Testing shall not relieve the Contractor of the responsibility for ensuring that the work is done in accordance with

these Specifications.

Contractor may increase the depths of successive fill layers beyond the depths specified if tests, performed at his expense, determine that the required densities can be obtained for the increased layer's depths.

Moisture content of soil shall be controlled as necessary to obtain the specified densities based upon the optimum moisture content for each material. Water shall be added to the soil when, in the opinion of the Contracting Officer, additional moisture may be necessary to obtain the specified density. Soil that is too wet shall be allowed to dry or be worked by plowing, disking, harrowing, or other means to dry the material to a workable moisture content.

In the event a specified density is not obtained, the Contracting Officer may order additional rolling, watering, or drying of the soil as necessary to obtain the specified density. Fill layers not meeting a specified density after additional working shall be removed and new material shall be placed and compacted to the specified density at no cost to the Government.

The lower part of fills constructed across inundated areas shall be built by dumping successive loads of rock in layers no thicker than necessary to support the hauling equipment. Succeeding layers shall be constructed as specified herein.

Rutted areas shall be immediately excavated of unstable material and replaced with rock or suitable earth fill and compacted to prevent additional rutting.

3.17.3 Trackwork

The existing track and ties shall be removed to the nearest existing rail splice and reinstalled. No track shall be laid until the roadbed (subgrade and subballast) is completed and approved by the Contracting Officer. All track work shall be performed by a Contractor found acceptable and approved to work on Norfolk-Southern Railroad projects.

The Contractor shall construct, ballast, line and surface the track to the required grade and alignment. The Contractor shall be responsible for the track until the track is accepted by the Contracting Officer.

3.17.3.1 Crossties

Crosstie installation shall conform to the following:

1. Crossties shall be spaced 20 inches center to center, and laid at right angles to the track centerline with the end measuring 1 foot 10-3/4 inches from the end of the tie to the gauge line of the rail.

2. The bearing surfaces of the crossties shall be clean before tie plate and rail installation.

3.17.3.2 Tie Plate

Tie plate installation shall conform to the following:

1. All crossties shall be fully tie plated before the rail is laid.

2. The bottom of the tie plates shall be cleaned before the plate is

applied.

3. Tie plates shall be applied with the 1:40 cant down towards the center of track.

4. The tie plate shall be spiked to gauge, not greater than every third crosstie, and shall be set so that the outside shoulder of the tie plate shall bear squarely against the base of the rail, having a full bearing for the rail and, at the same time, a full bearing on the crosstie.

3.17.3.3 Continuous Welded Rail

Continuous welded rail installation shall conform to the following:

1. Installation of the continuous welded rail shall be done with off track equipment so as to not interfere with the operation of main line traffic.

2. Although the Railroad shall endeavor to unload the rail in the approximate final location, it shall be the duty of the Contractor to position the rail in its final location which may require moving the welded rail strands.

3. The following rail temperature criteria shall apply:

a. Prior to laying continuous welded rail, the Contractor shall determine and record the maximum and minimum rail temperatures in the area, as laying procedures are dependent on the total range of temperatures to be experienced by the rail.

b. Although it is a recommended practice to lay continuous welded rail when the temperature is within plus or minus 10°F. of the regional mean temperature, the Contractor shall consult with the Contracting Officer and Norfolk-Southern Railroad to establish the desired laying temperature.

c. When it is not possible to lay the rail at the desired laying temperature, the Contractor shall record the temperature of each rail laid and make the necessary adjustments at a later date. All adjustments shall be as instructed by the Contracting Officer.

d. The Contractor shall be required to keep an accurate record of rail temperatures taken three times daily (morning, noon and afternoon). Rail temperature report chart shall be furnished to the Contractor by the Railroad.

4. If relay continuous welded rail is laid, the rail shall be laid so that the least worn side of the head of the rail is on the gauge side.

5. Continuous welded rail shall be handled in such a manner as to prevent bending and damaging the rail. Any rail damaged by the Contractor, due to mishandling, shall be replaced at the Contractor's expense.

6. The bottom of the rail shall be cleaned before the rail is laid.

7. Strands of continuous welded rail shall be connected by 36 inch joint bars and bolts as directed by the Contracting Officer. In some

cases only the outside holes will be drilled for later thermit welding. Continuous welded rail shall be laid without expansion gaps at the joints.

8. Joints are not allowed in continuous welded rail on or within 234 feet of open deck bridges except those associated with expansion joints.

9. The Contractor shall not be required to field weld joints.

10. Flame cutting of rails or burning of bolt holes with a torch shall be prohibited. Rails shall be cut with a rail saw only. Bolt holes shall be drilled with a rail drill only. Any Railroad or Industry owned rail which is flame cut by the Contractor shall be replaced by the Contractor at his expense.

3.17.3.4 Joint Bar

Joint bar installation shall conform to the following:

1. Joint bars shall be clean of any foreign material, except metal preservative, and properly installed with the full number of and correct size of bolts, nuts and spring washers.

2. Before placing joint bars, the bearing surfaces of the bars as well as the rail ends within the joint bar area shall be free of any foreign material except metal preservative.

3. Bolts placed with nuts alternately on inside and outside of rail shall be drawn tight before spiking.

4. Where possible, all joints shall be kept out of road crossings.

5. Before acceptance of work, all bolts shall be checked by the Contractor and, if necessary, tightened.

3.17.3.5 Final Gauging

Final gauging shall conform to the following:

1. Necessary final gauging shall be done after the rail is laid and jointed.

2. Before spikes are driven, crossties shall be evenly spaced and square to the rail. Tie plates shall be centered on the tie and provide full bearing.

3. When spiking, care shall be exercised not to spike the rail.

4. The final gauge shall be 56-1/2 inches.

5. Track shall be gauged as spikes are driven home.

6. Any crossties that do not fully bear on the subballast shall be nipped up while spiking.

7. When constructing skeleton track, final gauging and anchor spiking shall not be performed until after the track is lined to final alignment.

3.17.3.6 Anchor and Double Spiking

Anchor and double spiking shall conform to the following:

1. Track curvature shall be spiked as shown on the plans.

2. Drive screw spikes shall be used for anchor spiking of curves if specified on the plans.

3. When driving spikes in secondhand crossties, tie plugs shall be placed in all holes before driving spikes.

4. All spikes shall be started and driven perpendicular to the crosstie and square with the rail and so driven that the head of the spike shall have a full hold on the base of rail or the tie plate when anchor spiking.

5. Spikes shall not be overdriven so that the lip of the spike head bends upward.

6. No spikes shall be driven at the ends of joint bars.

7. The Contractor shall remove any overdriven spikes or spikes that are bent while driving. Tie plugs shall be placed and then spikes properly driven.

8. Relay spikes shall be used for all anchor spiking of tie plates. The Contractor shall straighten all relay spikes before use.

3.17.3.7 Rail Installation

Rail anchor installation shall conform to the following:

1. For continuous welded rail box anchor as follows:

a. Every other crosstie on tangent track and curves less than 3 degrees.

b. Every crosstie on curves 3degrees or greater.

c. Every crosstie 234 feet on each side of a joint.

3.17.3.8 Ballasting

Ballasting shall conform to the following:

1. The Contractor shall supply ballast. Contractor shall unload the ballast promptly upon delivery to the job site.

2. Contractor shall be responsible for unloading, hauling, transferring, spreading, tamping and dressing ballast.

3. Ballast shall be uniformly distributed as it is unloaded by the contractor after anchoring of the track has been completed.

4. The depth of preliminary ballast for surfacing shall not be more than 4 inches between the bottom of crossties and the top of subballast. Each successive raise shall not exceed 4 inches.

5. Care shall be taken to avoid disturbing or destroying any centerline or top of rail stakes.

6. The Contractor shall dress ballast to conform to typical roadbed sections as shown on the plans.

3.17.3.9 Surfacing

Surfacing shall conform to the following:

1. A preliminary surfacing shall follow each unloading of ballast.

2. The Contractor shall thoroughly tamp (surface) track with an on-track power (mechanical) tamper.

3. If jacks are used they must be placed close enough together to prevent undue bending of rails or strains at joints.

4. Both rails must be raised at one time as uniformly as possible.

5. The track shall not be raised more than 4 inches in one lift and ballast shall be well tamped under each crosstie before the next lift is made.

6. All crossties that are pulled loose shall be restored to proper position and fully nipped and spiked before tamping.

7. The Contractor shall raise the track to the final profile grades with the necessary additional ballast mechanically tamped under the crossties.

8. Ballast shall be well tamped from a point 15 inches inside of each rail, on both sides and under the crosstie, to the end of the crosstie.

3.17.3.10 Alignment

The alignment for the track shall not deviate from uniformity more than 1/8 inch at the midoffset in any 62 foot line on tangent track or more than 1/8 inch mid-offset in any 62 foot chord on curved track.

Track surface may not deviate from uniformity more than the following:

1. The deviation from design profile on any rail at the mid-ordinate of a 62 foot chord may not be more than 1/8 inch. Cross level must be maintained.

2. Curved track shall be superelevated as shown by the plans. Deviation from superelevation on spirals may not be more than 1/8 inch.

Upon completion of the final surfacing and lining of the track, the Contractor shall trim the ballast as shown on the plans, and dispose of any surplus ballast as directed by the Contracting Officer. The completed ballast section shall have all tie cribs filled, and crossties, tie plates and rails shall be swept clean.

-- End of Section --

SECTION TABLE OF CONTENTS

DIVISION 32 - EXTERIOR IMPROVEMENTS

SECTION 32 31 13

CHAIN LINK FENCES AND GATES

PART 1 GENERAL

1.1 REFERENCES
1.2 SUBMITTALS
1.3 ASSEMBLY AND INSTALLATION

PART 2 PRODUCTS

2.1 GENERAL
2.2 ZINC COATING
2.3 FABRIC
2.4 TOP AND BOTTOM SELVAGES
2.5 LINE POSTS
2.6 END, CORNER, AND PULL POSTS
2.7 SLEEVES
2.8 TOP RAIL
2.9 CENTER RAILS BETWEEN LINE POSTS
2.10 POST-BRACE ASSEMBLY
2.11 TENSION WIRE
2.12 STRETCHER BARS
2.13 POST TOPS
2.13.1 BARBED WIRE SUPPORTING ARMS
2.13.2 BARBED WIRE
2.14 STRETCHER BAR BANDS
2.15 GATE POSTS
2.16 GATES
2.17 GATE HARDWARE AND ACCESSORIES
2.18 MISCELLANEOUS HARDWARE
2.19 WIRE TIES
2.1.8 HEAVY DUTY BREATHABLE MESH/WINDSCREEN
2.20 CONCRETE

PART 3 EXECUTION

3.1 GENERAL
3.2 EXCAVATION
3.3 SETTING POSTS
3.4 CONCRETE STRENGTH
3.5 TOP RAILS
3.6 CENTER RAILS
3.7 BRACE ASSEMBLY
3.8 TENSION WIRE INSTALLATION
3.9 FABRIC INSTALLATION
3.10 STRETCHER BAR INSTALLATION
3.11 BARBED WIRE INSTALLATION
3.12 GATE INSTALLATION

3.13 TIE WIRES
3.14 FASTENERS
3.15 ZINC-COATING REPAIR
3.15.1 HEAVY DUTY BREATHABLE MESH/WINDSCREEN
3.16 TOLERANCES
3.17 GROUNDING
3.17.1 Resistance Training
3.18 FENCE REPAIR
3.19 QUALITY CONTROL

-- End of Section Table of Contents --

SECTION 32 31 13

CHAIN LINK FENCES AND GATES

PART 1 GENERAL

This specification section will be used for installation, maintenance and removal of temporary security fencing and permanent fencing as designated in the drawings.

1.1 REFERENCES

~~This specification section will be used for installation and removal of temporary security fencing and permanent fencing as designated in the drawings.~~ The publications listed below form a part of this specification to the extent referenced. The publications are referred to within the text by the basic designation only.

ASTM INTERNATIONAL (ASTM)

ASTM A 116	(2000) Standard Specification for Metallic-Coated, Steel Woven Wire Fence Fabric
ASTM A 121	(2004) Standard Specification for Metallic-Coated Carbon Steel Barbed Wire
ASTM A 153/A 153M	(2005) Standard Specification for Zinc Coating (Hot-Dip) on Iron and Steel Hardware
ASTM A 390	(2001) Standard Specification for Zinc-Coated (Galvanized) Steel Poultry Fence Fabric (Hexagonal and Straight Line)
ASTM A 702	(1989; R 2000) Standard Specification for Steel Fence Posts and Assemblies, Hot Wrought
ASTM A 780	(2001) Standard Practice for Repair of Damaged and Uncoated Areas of Hot-Dip Galvanized Coatings
ASTM A 90/A 90M	(2001) Standard Test Method for Weight of Coating on Iron and Steel Articles with Zinc or Zinc-Alloy Coatings
ASTM C 94/C 94M	(2004a) Standard Specification for Ready-Mixed Concrete
ASTM F 1043	(2004) Strength and Protective Coatings on Metal Industrial Chain-Link Fence Framework
ASTM F 1083	(2004) Standard Specification for Pipe, Steel, Hot-Dipped Zinc Coated (Galvanized) Welded, for Fence Structures

ASTM F 626	(1996a; R 2003) Standard Specification for Fence Fittings

U.S. GENERAL SERVICES ADMINISTRATION (GSA)

FS RR-F-191/3D	(2001) Fencing, Wire and Pest, Metal (Chain Link Fence Posts, Top Rails and Braces) (Detail Specification)

1.2 SUBMITTALS

Government approval is required for submittals with a "G" designation; submittals not having a "G" designation are for Contractor Quality Control approval. Submit the following in accordance with Section 01 33 00 SUBMITTAL PROCEDURES:

SD-02 Shop Drawings

Erection/Installation Drawings shall be submitted for the following items in accordance with paragraph entitled, "Assembly and Installation," of this section.

Fence Assembly
Gate Assembly
Gate Hardware and Accessories

SD-03 Product Data

Manufacturer's catalog data shall submitted for the following items:

Fence Assembly
Gate Assembly
Gate Hardware and Accessories

SD-04 Samples

Contractor shall submit the following samples described within this section:

Heavy Duty Breathable Mesh/Windscreen; G, C

A colored sample of the Mesh/Windscreen compliant shall be delivered prior to installation.

SD-07 Certificates

Certified copies of test reports demonstrating conformance to applicable specifications shall be delivered to the Contracting Officer before fencing is installed.

SD-08 Manufacturer's Instructions

Manufacturer's instructions shall be submitted for the following items:

Fence Assembly
Gate Assembly

Hardware Assembly
Accessories

1.3 ASSEMBLY AND INSTALLATION

Contractor shall provide manufacturer's instructions that detail proper assembly and materials in the design for fence, gate, hardware and accessories.

Erection/Installation drawings shall be submitted along with manufacturer's catalog data for Complete fence assembly, gate assembly, hardware assembly and accessories.

PART 2 PRODUCTS

2.1 GENERAL

Fencing materials shall conform to the requirements of ASTM A 116, ASTM A 121, ASTM A 390, ASTM A 702, ASTM F 626, and as specified.

2.2 ZINC COATING

Ferrous-metal components and accessories, except as otherwise specified, shall be hot-dip galvanized after fabrication.

Weight of zinc coating shall not be less than 1.8 ounces per square foot, as determined from the average result of two specimens, when tested in accordance with ASTM A 90/A 90M.

Zinc coating shall conform to the requirements of the following:

Pipe: FS RR-F-191/3D Class 1 Grade A in accordance with ASTM F 1083.

Hardware and accessories: ASTM A 153/A 153M, Table 1

Surface (ASTM F 1043):

External: Type B-B surface zinc with organic coating, 0.9 ounce per square foot minimum thickness of acrylated polymer.

Internal: Surface zinc coating of 0.9 ounce per square foot minimum.

Galvanizing repair material shall be a cold-applied zinc-rich coating conforming to ASTM A 780.

2.3 FABRIC

Fabric shall consist of No. 9-gage wires woven into a 2-inch diamond mesh, with dimensions of fabric and wire conforming to ASTM A 116, ASTM A 121, ASTM A 390, ASTM A 702 and ASTM F 626, with 1.2 ounces per square foot zinc galvanizing.

Fence heights to 12 feet shall have one-piece fabric widths.

2.4 TOP AND BOTTOM SELVAGES

Fabric with 2 inch mesh and up to 60 inches high shall be knuckled on both top and bottom selvages, over if 60 inches high, it shall be twisted and barbed on the top selvage and knuckled on the bottom selvage.

Top and bottom selvages shall be knuckled for 1-3/4-inch and 1-inch mesh fabric.

2.5 LINE POSTS

Minimum acceptable line posts shall be as follows:

Up to 6-feet high:

Grade A: 1.900 inch O.D. pipe weighing 2.72 pounds per linear foot.

Grade B: 2.375 inch O.D. pipe weighing 3.12 pounds per linear foot.

Over 6-feet high:

2.0 inch O.D. pipe weighing 3.65 pounds per linear foot.

2.6 END, CORNER, AND PULL POSTS

Minimum acceptable end, corner, and pull posts shall be as follows:

Up to 6 feet high:

Grade A: 2.375 inch O.D. pipe weighing 3.65 pounds per linear foot.

Grade B: 2.375 inch O.D. pipe weighing 3.12 pounds per linear foot.

Over 6 feet high:

Grade A: 2.875 inch O.D. pipe weighing 5.79 pounds per linear foot.

Grade B: 2.875 inch O.D. pipe weighing 4.64 pounds per linear foot.

2.7 SLEEVES

Sleeves for setting into concrete construction shall be of the same material as post sections. Size shall be 1-inch greater than the diameter or dimension of the post. Flat plates shall be welded to each sleeve base to provide anchorage and prevent intrusion of concrete.

2.8 TOP RAIL

Rails shall be a minimum of 1.660 inches O.D. pipe Grade B weighing 1.82 pounds per linear foot. Expansion couplings 6-inches long shall be provided at each joint in top rails.

2.9 CENTER RAILS BETWEEN LINE POSTS

For fencing over 6-feet high, center rails shall be 1.660 inches O.D. pipe Grade B weighing 1.82 pounds per linear foot.

2.10 POST-BRACE ASSEMBLY

Bracing shall consist of 1.660 inches O.D. pipe Grade B weighing 1.82 pounds per linear foot and 3/8 inch adjustable truss rods and turnbuckles.

2.11 TENSION WIRE

Wire shall be galvanized, No. 7-gage, coiled spring wire, provided at the bottom of the fabric only. Zinc Coating shall weigh not less than 1.6 ounces per square foot.

2.12 STRETCHER BARS

Bars shall be one-piece lengths equal to the full height of the fabric with a minimum cross section of 3/16 by 3/4 inch, in accordance with ASTM A 116, ASTM A 121, ASTM A 390, ASTM A 702 and ASTM F 626.

2.13 POST TOPS

Tops shall be steel, wrought iron, or malleable iron designed as a weathertight closure cap. One cap shall be provided for each post, unless equal protection is provided by a combination post-cap and barbed-wire supporting arm. Caps shall have an opening to permit through passage of the top rail.

2.13.1 BARBED WIRE SUPPORTING ARMS

Supporting arms for barbed wire shall be steel, wrought iron, or malleable iron, complete with provisions for anchorage to posts and for attaching 3 rows of barbed wire to each arm. Supporting arms may either be attached to posts or integral with the post top weather cap.

2.13.2 BARBED WIRE

Wire shall conform to ASTM A 116, ASTM A 121, ASTM A 390, ASTM A 702 and ASTM F 626, two-strand, 12-1/2-gage wire with 14-gage 4-point round barbs spaced 5 inches on center.

2.14 STRETCHER BAR BANDS

Bar bands for securing stretcher bars to posts shall be steel, wrought iron, or malleable iron spaced not over 15 inches on center. Bands may also be used in conjunction with special fittings for securing rails to posts. Bands shall have projecting edges chamfered or eased.

2.15 GATE POSTS

Contractor shall provide a gate post for supporting each gate leaf as follows:

Up to 6-feet wide:

2.875 inch O.D. pipe
Grade A weighing 5.79 pounds per linear foot.
Grade B weighing 4.64 pounds per linear foot.

Over 6 feet wide and up to 13 feet wide:

2.875 inch O.D. pipe
Grade A weighing 5.79 pounds per linear foot.
Grade B weighing 4.64 pounds per linear foot.

Over 13-feet and up to 18-feet wide:

Provide 6.625 inch O.D. pipe weighing 18.97 pounds per linear foot.

Over 18-feet wide:

Provide 8.625 inch O.D. pipe weighing 24.70 pounds per linear foot.

2.16 GATES

For gate leaves up to 6-feet high or 6-feet wide, perimeter gate frames shall be 1.66 inch O.D. pipe

Grade A weighing 2.27 pounds per linear foot.
Grade B weighing 1.82 pounds per linear foot.

For gate leaves over 6 feet high or 6 feet wide, perimeter gate frames shall be 1.90 inch O.D. pipe

Grade A weighing 2.72 pounds per linear foot.
Grade B weighing 2.28 pounds per linear foot.

Gate frame assembly shall be welded or assembled with special malleable or pressed-steel fittings and rivets to provide rigid connections. Fabric shall be installed with stretcher bars at vertical edges; stretcher bars may also be used at top and bottom edges. Stretcher bars and fabric shall be attached to gate frames on all sides at intervals not exceeding 15 inches. Hardware shall be attached with rivets or by other means that will provide equal security against breakage or removal.

Where barbed wire is indicated above gates, the end members of gate frames shall be extended approximately 1-foot above the top member with provision for attaching the wire. Vertical support arms shall be provided at intermediate points, spaced the same as line posts.

Diagonal cross-bracing, consisting of 3/8-inch diameter adjustable-length truss rods on welded gate frames, shall be provided where necessary to obtain frame rigidity without sag or twist. Nonwelded gate frames shall have diagonal bracing.

2.17 GATE HARDWARE AND ACCESSORIES

Gate hardware and accessories shall conform to ASTM A 116, ASTM A 121, ASTM A 390, ASTM A 702, ASTM F 626, and be as specified:

Hinges shall be malleable iron, forged steel, or pressed steel to suit gate size, non-lift-off type, offset to permit 180-degree opening.

Latch shall permit operation from either side of the gate, with a padlock eye provided as an integral part of the latch.

Stops and holders of malleable iron shall be provided for vehicular gates. Stops shall automatically engage the gate and hold it in the open position until manually released.

Double gates shall be provided with a cane bolt and ground-set keeper, with latch or locking device and padlock eye designed as an integral part.

Manufacturer's standard heavy-duty track ball-bearing hanger sheaves, overhead framing and supports, guides, stays, bracing, and accessories shall be provided as required for easy operation of manual sliding gates.

2.18 MISCELLANEOUS HARDWARE

Miscellaneous hardware shall be provided as required and shall be hot-dip galvanized.

2.19 WIRE TIES

Wires for tying fabric to line posts shall be 16-gage galvanized steel wire spaced 12 inches on center. For tying fabric to rails and braces, wire ties shall be spaced 24 inches on center. For tying fabric to tension wire, 0.105-inch hog rings shall be spaced 24 inches on center.

Manufacturer's standard procedure will be accepted if of equal strength and durability.

2.1.8 HEAVY DUTY BREATHABLE MESH/WINDSCREEN

Mesh/Windscreen shall be Poly "Closed Mesh" Polypropylene material, 5% ventilation, 7 oz. closed mesh woven polypropylene, 3-ply hems sewn with two rows of heavy-duty polyester threads. Brass grommets shall be spaced 15 inches on center on all four sides, providing wind vents as required.

2.20 CONCRETE

Concrete shall conform to ASTM C 94/C 94M. Mix shall be designed to obtain concrete with a minimum 28-day compressive strength of 2,500 psi.

PART 3 EXECUTION

3.1 GENERAL

Contractor shall coordinate with the COR prior to fence installation. Fence shall be installed to the lines indicated on the drawings unless directed by the COR. Line post shall be spaced equidistant at intervals not exceeding 10 feet. Terminal (corner) posts shall be set at abrupt changes in vertical and horizontal alignment. Where denoted on the drawings, fabric shall be continuous between terminal (corner) posts.

3.2 EXCAVATION

Footings shall be spaced for line posts 10 feet on center maximum and at closer intervals when indicated.

Bottoms of the holes shall be approximately 3-inches below the bottoms of the posts. Bottom of each post shall be set not less than 36-inches below finished grade when in firm, undisturbed soil. Posts shall be set deeper, as required, in soft and problem soils and for heavy, lateral loads.

Soil from excavations shall be spread uniformly adjacent to the fence line or on areas of Government property, as directed.

When solid rock is encountered near the surface, the Contractor shall drill into the rock at least 12 inches for line posts and at least 18 inches for end, pull, corner, and gate posts. Holes shall be drilled at least 1 inch greater in diameter than the largest dimension of the placed post.

If solid rock is below the soil overburden, Contractor shall drill to the full depth required except that penetration into rock need not exceed the minimum depths specified above.

3.3 SETTING POSTS

Loose and foreign materials shall be removed from holes and the soil moistened prior to placing concrete.

Tops of footings shall be trowel finished and sloped or domed to shed water away from posts. Hold-open devices, sleeves, and other accessories shall be set in concrete.

Exposed concrete shall be kept moist for at least 7 calendar days after placement or cured with a membrane curing material, as approved.

Posts set in concrete construction shall be set vertically, with tops aligned and held in position until concrete has set.

3.4 CONCRETE STRENGTH

Concrete shall have attained at least 75 percent of its minimum 28-day compressive strength, but in no case sooner than 7 calendar days after placement, before rails, tension wires, barbed wire, or fabric are installed. Fabric and wires shall not be stretched or gates hung until the concrete has attained its full design strength.

3.5 TOP RAILS

Top rails shall run continuously through post caps or extension arms, bending to radius for curved runs. Expansion couplings shall be provided as recommended by the fencing manufacturer.

3.6 CENTER RAILS

Center rails shall be one piece between posts set flush with posts on the fabric side, using special offset fittings where necessary.

3.7 BRACE ASSEMBLY

Contractor shall provide bracing assemblies at end and gate posts and at both sides of corner and pull posts, with the horizontal brace located at midheight of the fabric.

Brace assemblies shall be installed so posts are plumb when the diagonal rod is under proper tension.

Two complete brace assemblies shall be provided at corner and pull posts where required for stiffness and as indicated.

3.8 TENSION WIRE INSTALLATION

Tension wires shall be installed by weaving them through the fabric and tying them to each post with not less than 7-gage galvanized wire or by securing the wire to the fabric with 10-gage ties or clips spaced 24 inches on center.

3.9 FABRIC INSTALLATION

Fabric shall be provided in single lengths between stretch bars with bottom barbs placed approximately 1-1/2-inches above the ground line. Fabric shall be pulled taut and tied to posts, rails, and tension wires with wire ties and bands.

Fabric shall be installed on the security side of fence, unless otherwise directed.

Fabric shall remain under tension after the pulling force is released.

3.10 STRETCHER BAR INSTALLATION

Stretcher bars shall be threaded through or clamped to fabric 4 inches on center and secured to posts with metal bands spaced 15 inches on center.

3.11 BARBED WIRE INSTALLATION

Three parallel strands of barbed wire shall be installed on the security side of the fence as specified or indicated. Wire shall be pulled taut and fastened securely to each support arm.

3.12 GATE INSTALLATION

Gates shall be installed plumb, level, and secure, with full opening without interference. Ground-set items shall be installed in concrete for anchorage as recommended by the fence manufacturer. Hardware shall be adjusted for smooth operation and lubricated where necessary.

3.13 TIE WIRES

Tie wires shall be U-shaped to the pipe diameters to which attached. Ends of tie wires shall be twisted not less than two full turns and bent so as not to present a hazard.

3.14 FASTENERS

Nuts for tension bands and hardware shall be installed on the side of the fence opposite the fabric side. Ends of bolts shall be peened to prevent removal of nuts.

3.15 ZINC-COATING REPAIR

Galvanized surfaces damaged by welding or abrasions, and cut ends of fabric, barbed wire, or other cut sections shall be cleaned and repaired with specified galvanizing repair material applied in strict conformance with the manufacturer's printed instructions.

3.15.1 HEAVY DUTY BREATHABLE MESH/WINDSCREEN

Mesh/Windscreen shall be installed on the interior face of the chain link fence. The Mesh shall be black or dark green in color. The contractor shall maintain the mesh/windscreen after installation. Maintenance shall include but not limited to repairing damaged screens and posts.

3.16 TOLERANCES

Posts shall be straight and plumb within a vertical tolerance of 1/4 inch

after the fabric has been stretched. Fencing and gates shall be true to line with no more than 1/2 inch deviation from the established centerline between line posts. Defects shall be repaired as directed.

3.17 GROUNDING

Fences shall be grounded at intervals not exceeding 500 feet and there shall be a ground within 100 feet of gates in each section of the fence adjacent to the gate. Ground conductor shall consist of No. 8 AWG solid copper wire. Grounding electrodes shall be 19mm (3/4-inch) by 3.05m (10-foot) long copper-clad steel rod. Electrodes shall be driven into the earth so that the top of the electrode is at least 152mm (6 inches) below the grade. Where driving is impracticable, electrodes shall be buried a minimum of 300mm (12 inches) deep and radially from the fence. The top of the electrode shall be not less than 0.6m (2 feet) or more than 2.4m (8 feet) from the fence. Ground conductor shall be clamped to the fence and electrodes with bronze grounding clamps to create electrical continuity between fence posts, fence fabric, and ground rods. After installation the total resistance of fence to ground shall not be greater than 25 ohms.

3.17.1 Resistance Training

Perform resistance testing of all ground rods and fence components to assure safe, adequate grounding has been achieved.

3.18 FENCE REPAIR

Fences that are damaged during construction must be repaired to pre-damaged condition. The tie wire used to fix the fence should be of the same gauge as the tie wire used to install the fence (9-gauge aluminum or 11-gauge galvanized steel) or heavier, and when fixing a break, each chain link in the break should be connected to its corresponding chain link with the tie wire. In addition, buckled fence posts, braces, and truss rods should be replaced, not bent back into shape. Inspection, maintenance and repair of windscreen fabric (if applied) is to be performed for the duration of the project. The Contractor shall perform regular inspections and maintenance of the fence during the entire life of the contract.

3.19 QUALITY CONTROL

The Contractor shall establish and maintain a quality control system for the work under this section in accordance with Section 01 45 04.00 03 CONTRACTOR QUALITY CONTROL including, but not limited to, the following:

a. Fence Materials and Installation.
b. Fence Repair.
c. Grounding.

-- End of Section --

3.2 PLACING AND DRIVING

3.2.1 Placing

Any excavation required within the area where pilings are to be installed shall be completed prior to placing sheet piling. Pilings shall be carefully located as shown on the drawings or directed by the Contracting Officer. Pilings shall be placed plumb with out of plumbness not exceeding 1/8 inch per foot of length and true to line. Temporary wales, templates, or guide structures shall be provided to insure that the pilings are placed and driven to the correct alignment. At least two templates shall be used in placing each piling and the maximum spacing of templates shall not exceed 20 feet. Sheet pilings properly placed and driven shall be interlocked throughout their length with adjacent pilings to form a continuous diaphragm throughout the length or run of piling wall.

3.2.2 Driving

~~Vibratory driving of piles shall not be allowed. Pilings shall be driven with the proper size hammer and by approved methods so as not to subject the pilings to damage.~~Pilings shall be driven with the proper size hammer and by approved methods so as not to subject the pilings to damage. Vibratory driving of piles shall not be allowed in or within 50 feet of the Utility Corridor pipelines. Caution shall be taken in the sustained use of vibratory hammers when a hard driving condition is encountered to avoid interlock-melt or damages. The use of vibratory hammers should be discontinued AND impact hammers employed when the penetration rate due to vibratory loading is one foot or less per minute. Driving resistance in excess of 20 blows/in shall be considered practical refusal. If driving resistance approaches practical refusal to penetrate the layer, then the contractor shall notify the Contracting Officer and perform any corrective measures as directed by him. Insure proper sheet pile interlocking throughout their lengths. Driving hammers shall be maintained in proper alignment during driving operations by use of leads or guides attached to the hammer. A protecting cap shall be employed in driving when using impact hammers to prevent damage to the tops of pilings. Pilings damaged during driving or driven out of interlock shall be removed and replaced at the Contractor's expense. Adequate precautions shall be taken to insure that pilings are driven plumb. If at any time the forward or leading edge of the sheet piling wall is found to be out of plumb in the plane of the wall, the piling being driven shall be driven to the required depth and tapered pilings shall be provided and driven to interlock with the out of plumb leading edge or other approved corrective measures shall be taken to insure the plumbness of succeeding pilings. The maximum permissible taper for any tapered piling shall be 1/8 inch per foot of length. Pilings in each run or continuous length of piling wall shall be driven alternately in increments of depth to the required depth or elevation. No piling shall be driven to a lower elevation than those behind it in the same run except when the pilings behind it cannot be driven deeper. If the sheet piling next to the one being driven tends to follow below final elevation it may be pinned to the next adjacent piling. If obstructions restrict driving a piling to the specified penetration the obstructions shall be removed or penetrated with chisel beam. If the Contractor demonstrate that removal or penetration is impractical the Contractor shall make changes in the design alignment of the piling structure as directed by the Contracting Officer to insure the adequacy and stability of the structure. Pilings shall be driven to depths shown on the drawings and shall extend up to the elevation indicated on the drawings for the top of pilings. Pilings shall not be driven within 100 feet of concrete less than 7 days old.

3.3 CUTTING OFF AND SPLICING

Pilings driven to refusal or to the point where additional penetration cannot be attained and are extending above the required top elevation shall be cut off to the required elevation, as directed by the Contracting Officer. Pilings driven below the required top elevation and pilings damaged by driving and cut off to permit further driving shall be extended as required to reach the top elevation by splicing when directed by the Contracting Officer at no additional cost to the Government. If directed by the Contracting Officer pilings shall be spliced as required to drive them to depths greater than shown on the drawings and extend them up to the required top elevation. Pilings adjoining spliced pilings shall be full length unless otherwise approved. Ends of pilings to be spliced shall be squared before splicing to eliminate dips or camber. Pilings shall be spliced together with concentric alignment of the interlocks so that there are no discontinuities, dips or camber at the abutting interlocks. Spliced pilings shall be free sliding and able to obtain the maximum swing with contiguous pilings. The tops of pilings excessively battered during driving shall be trimmed when directed at no cost to the Government. Piling cutoffs shall become the property of the Contractor and shall be removed from the site. The Contractor shall cut holes in pilings for bolts, rods, drains or utilities as shown on the drawings or as directed. All cutting shall be done in a neat and workmanlike manner. A straight edge shall be used in cuts made by burning to avoid abrupt nicks. Bolt holes in steel piling shall be drilled or may be burned and reamed by approved methods which will not damage the surrounding metal. Holes other than bolt holes shall be reasonably smooth and the proper size for rods and other items to be inserted.

3.3.1 Inspection of Driven Piling

The Contractor shall inspect the interlocked joints of driven sheet pilings extending above ground. Pilings found to be out of interlock shall be removed and replaced at the Contractor's expense.

3.3.2 Pulling and Redriving

The Contractor shall pull selected pilings after driving to determine the condition of the underground portions of pilings when directed by the Contracting Officer. The method of pulling pilings must be approved by the Contracting Officer. Any piling so pulled and found to be damaged to the extent that its usefulness in the structure is impaired shall be removed and replaced at the Contractor's expense. Pilings pulled and found to be in satisfactory condition shall be redriven when directed by the Contracting Officer.

3.4 REMOVAL

The removal of pilings shall consist of pulling, sorting, cleaning, inventorying and storing previously installed pilings as shown on the drawings and directed by the Contracting Officer.

3.4.1 Pulling

The method of pulling piling must be approved by the Contracting Officer. Pulling holes shall be provided in pilings as required. Extractors shall be of suitable type and size. Care shall be exercised during the pulling of pilings to avoid damaging piling interlocks and adjacent construction.

If the Contracting Officer determine that adjacent permanent construction has been damaged during pulling the Contractor will be required to repair this construction at no cost to the Government. Pilings shall be pulled one sheet at a time. Pilings fused together shall be separated prior to pulling unless the Contractor demonstrates to the satisfaction of the Contracting Officer that the pilings cannot be separated. The Contractor will not be paid for the removal of pilings damaged beyond structural use due to proper care not being exercised during pulling.

3.4.2 Sorting, Cleaning, Inventorying and Storing

Pulled pilings shall be sorted, cleaned, inventoried and stored by type into groups as (1) piling usable without reconditioning, (2) piling requiring reconditioning and (3) piling damaged beyond structural use.

3.5 QUANTITIES

The estimated quantities of steel sheet piling listed in the bidding schedule of the contract are furnished for bidding purposes only. Sheet pile quantities for payment shall consist of the square feet of piling acceptably installed. Installed quantities shall consist of all piling including fabricated sections driven between the required top and bottom elevations of pilings plus any additions thereto resulting from changes in design or alignment.

3.6 QUALITY CONTROL

The Contractor shall establish and maintain a quality control system for the work under this section, in accordance with SECTION 01 45 04.00 03, "CONTRACTOR QUALITY CONTROL".

-- End of Section --

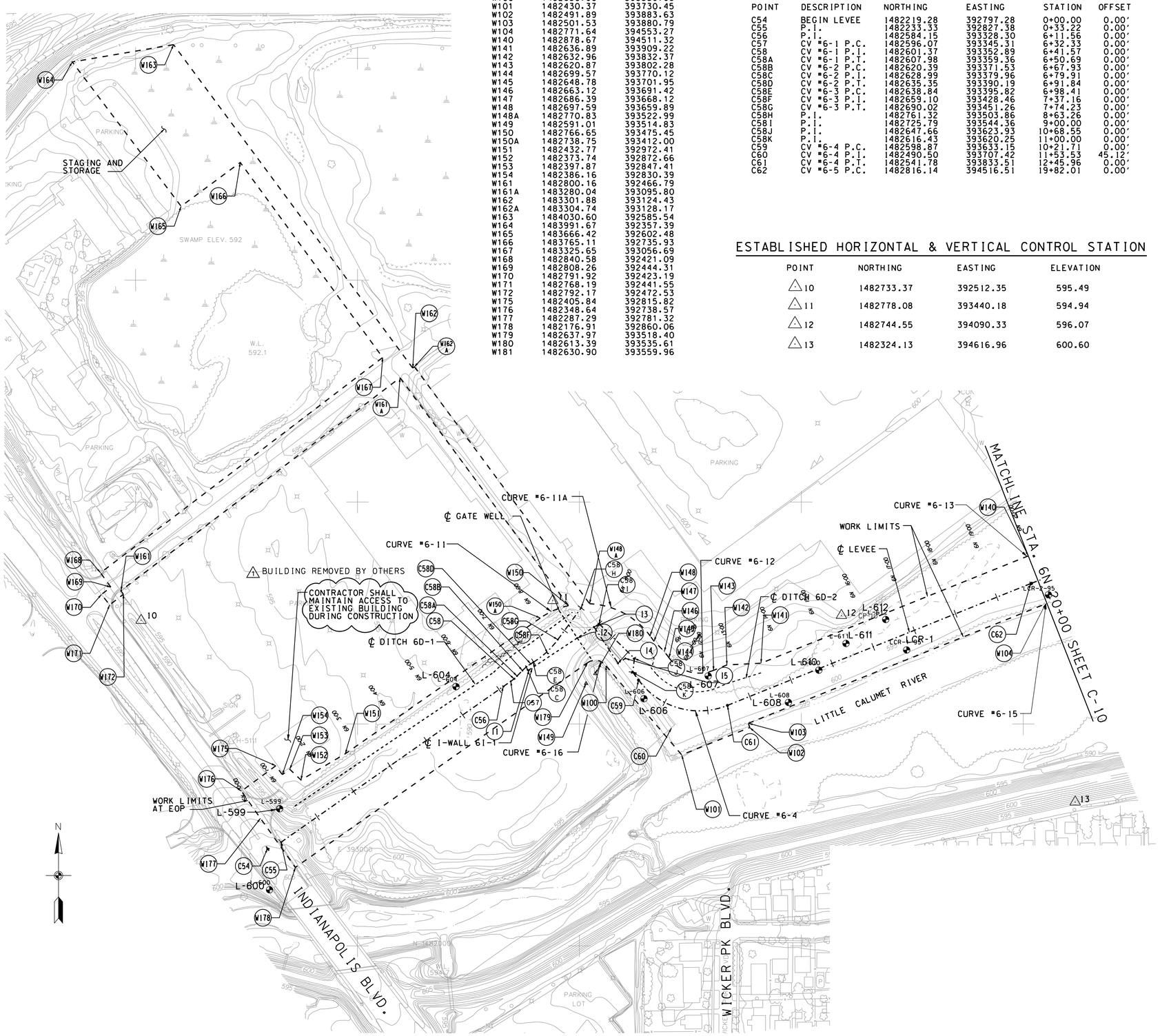

WORK LIMIT COORDINATES

POINT	NORTHING	EASTING
W100	1482630.90	393559.98
W101	1482430.37	393730.45
W102	1482491.89	393883.63
W103	1482501.53	393880.79
W104	1482771.64	394553.27
W140	1482878.67	394511.32
W141	1482636.89	393909.22
W142	1482632.96	393832.37
W143	1482620.87	393802.28
W144	1482699.57	393770.12
W145	1482648.78	393701.95
W146	1482663.12	393691.42
W147	1482686.39	393668.12
W148	1482697.59	393659.89
W148A	1482770.83	393522.99
W149	1482591.01	393514.83
W150	1482766.65	393475.45
W150A	1482738.75	393412.00
W151	1482432.77	392972.41
W152	1482373.74	392872.66
W153	1482397.87	392847.41
W154	1482386.16	392830.39
W161	1482800.16	392466.79
W161A	1483280.04	393095.80
W162	1483301.88	393124.43
W162A	1483304.74	393128.17
W163	1484030.60	392585.54
W164	1483991.67	392357.39
W165	1483666.42	392602.48
W166	1483765.11	392735.93
W167	1483325.65	393056.69
W168	1482840.58	392421.09
W169	1482808.26	392444.31
W170	1482791.92	392423.19
W171	1482768.19	392441.55
W172	1482792.17	392472.53
W175	1482405.84	392815.82
W176	1482348.64	392738.57
W177	1482287.29	392781.32
W178	1482176.91	392860.06
W179	1482637.97	393518.40
W180	1482613.39	393535.61
W181	1482630.90	393559.96

LEVEE CENTERLINE COORDINATES

POINT	DESCRIPTION	NORTHING	EASTING	STATION	OFFSET
C54	BEGIN LEVEE	1482219.28	392797.28	0+00.00	0.00'
C55	P.I.	1482233.33	392827.38	0+33.22	0.00'
C56	P.I.	1482584.15	393328.30	6+11.56	0.00'
C57	CV #6-1 P.C.	1482596.07	393345.31	6+32.33	0.00'
C58	CV #6-1 P.I.	1482601.37	393352.89	6+41.57	0.00'
C58A	CV #6-1 P.T.	1482607.98	393359.36	6+50.69	0.00'
C58B	CV #6-2 P.C.	1482620.39	393371.53	6+67.93	0.00'
C58C	CV #6-2 P.I.	1482628.99	393379.96	6+79.91	0.00'
C58D	CV #6-2 P.T.	1482635.35	393390.19	6+91.84	0.00'
C58E	CV #6-3 P.C.	1482638.84	393395.82	6+98.41	0.00'
C58F	CV #6-3 P.I.	1482659.10	393428.46	7+37.16	0.00'
C58G	CV #6-3 P.T.	1482690.02	393451.26	7+74.23	0.00'
C58H	P.I.	1482761.32	393503.86	8+63.26	0.00'
C58I	P.I.	1482725.79	393544.36	9+00.00	0.00'
C58J	P.I.	1482647.66	393623.93	10+68.55	0.00'
C58K	P.I.	1482616.43	393620.25	11+00.00	0.00'
C59	CV #6-4 P.C.	1482598.87	393633.15	10+21.71	0.00'
C60	CV #6-4 P.I.	1482490.50	393707.42	11+53.53	45.12'
C61	CV #6-4 P.T.	1482541.78	393833.51	12+45.96	0.00'
C62	CV #6-5 P.C.	1482816.14	394516.51	19+82.01	0.00'

ESTABLISHED HORIZONTAL & VERTICAL CONTROL STATION

POINT	NORTHING	EASTING	ELEVATION
10	1482733.37	392512.35	595.49
11	1482778.08	393440.18	594.94
12	1482744.55	394090.33	596.07
13	1482324.13	394616.96	600.60

CURVE DATA

LEVEE

CV #6-1

DELTA 10° 56' 00.00" (LT)
TANGENT 9.25
LENGTH 18.44
RADIUS 100

CV #6-2

DELTA 13° 73' 00.00" (RT)
TANGENT 12.02
LENGTH 23.97
RADIUS 100

CV #6-3

DELTA 21° 75' 00.00" (LT)
TANGENT 38.42
LENGTH 75.92
RADIUS 200

REMOVE CURVE DATA FOR CV #6-5

CV #6-5

DELTA 38° 06' 16.68" (RT)
TANGENT 155.41
LENGTH 299.27
RADIUS 450.00

CV #6-4

DELTA 75° 34' 50.12" (LT)
TANGENT 131.819
LENGTH 224.252
RADIUS 170

WORK LIMITS

CV #6-11

DELTA 22°12'03.36"(RT)
TANGENT 35.32'
LENGTH 69.75'
RADIUS 180.00

CV #6-11A

DELTA 51°05'52.75" (LT)
TANGENT 86.04'
LENGTH 160.53'
RADIUS 180.00

CV #6-13

DELTA 36° 04' 26.12" (RT)
TANGENT 149.79
LENGTH 289.62
RADIUS 460.00

CV #6-12

DELTA 75° 33' 12.10" (LT)
TANGENT 65.88
LENGTH 112.09
RADIUS 85.00

CV #6-15

DELTA 43° 04' 43.91" (LT)
TANGENT 136.17
LENGTH 259.39
RADIUS 345.00

CV #6-16

DELTA 89° 18' 31.67" (LT)
TANGENT 29.64
LENGTH 46.76
RADIUS 30.00

I-WALL CENTERLINE COORDINATES

POINT	DESCRIPTION	NORTHING	EASTING
I1	BEGIN I-WALL	1482621.81	393386.60
I2	P.I.	1482693.77	393495.13
I3	P.I.	1482718.73	393532.77
I4	P.I.	1482636.79	393587.10
I5	P.I.	1482647.67	393603.52

LEGEND

(C1)	CENTERLINE POINT AT LEVEE
(W1)	WORK LIMIT POINT
-·-·-·-·-	LEVEE CENTERLINE
----------	DITCH CENTERLINE
- - - - - -	WORK LIMIT LINE

NOTES:

1. FOR SYMBOLS, ABBREVIATIONS, AND GENERAL NOTES SEE SHEETS G-03 AND G-04.
2. ALL COORDINATES ARE BASED ON INDIANA STATE PLANE COORDINATES ZONE WEST, NAD27.
3. FOR CROSS SECTION SEE SHEETS C-38 AND C-39.
4. FOR PLAN AND PROFILE AND DITCH COORDINATES SEE SHEETS C-22 AND C-23.
5. FOR ACCESS RAMPS COORDINATES SEE SHEET C-58.
6. FOR GATEWELL AND CULVERT COORDINATES SEE SHEETS C-45 AND C-51.

100 50 0 100 200
1 INCH = 100 FEET

US Army Corps of Engineers
Chicago District

SYMBOL	AMENDMENT DESCRIPTION	DATE APPROVED	SYMBOL	DESCRIPTION	DATE APPROVED

CHANGES IDENTIFIED NEXT TO BUBBLE

DESIGNED BY: JAG
DATE: AUG 2007
DRAWN BY: DB
SCALE: AS SHOWN
CHECKED BY: WK
SOLICITATION NUMBER: W912P6-07-B-0006
SUBMITTED BY: JOHN GROBOSKI
DATE:

U.S. ARMY ENGINEER DISTRICT
CORPS OF ENGINEERS
CHICAGO, ILLINOIS

LITTLE CALUMET RIVER, INDIANA
LOCAL FLOOD PROTECTION
STAGE V, PHASE 2 - LEVEE

WORK LIMITS AND
CONTROL DATA LEVEE 6N
STA. 0+00 TO STA. 20+00

SHEET REFERENCE NUMBER:
C-09
SHEET 13 OF 138

PLOT DATE: 8/24/2007
FILENAME: D:\working\dms105\A\LC5SC09AM01.DGN

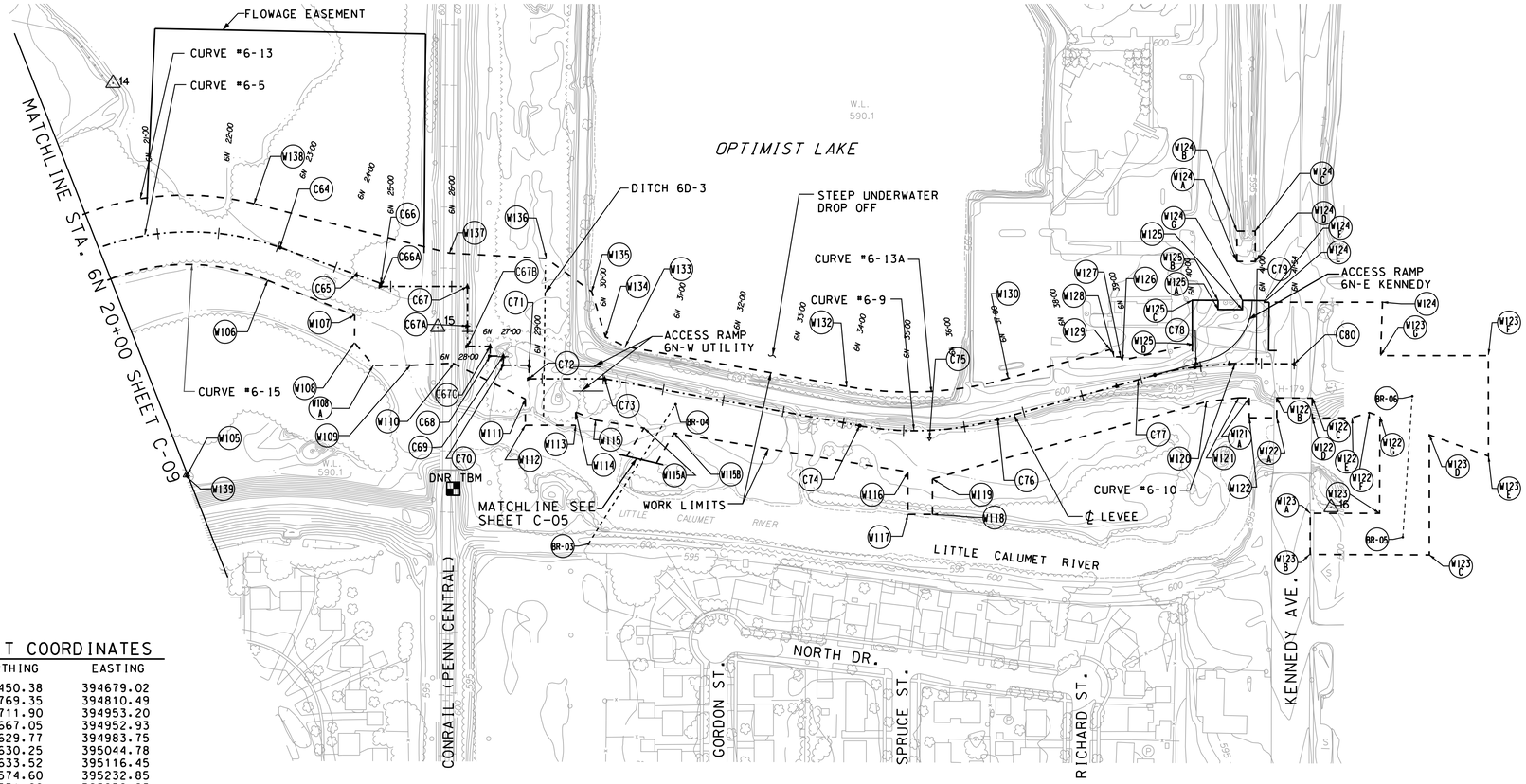

WORK LIMIT COORDINATES

POINT	NORTHING	EASTING
W105	1482450.38	394679.02
W106	1482769.35	394810.49
W107	1482711.90	394953.20
W108	1482667.05	394952.93
W108A	1482629.77	394983.75
W109	1482630.25	395044.78
W110	1482633.52	395116.45
W111	1482574.60	395232.85
W112	1482531.60	395232.85
W113	1482531.60	395315.54
W114	1482553.19	395315.54
W115	1482540.06	395348.13
W115A	1482526.88	395427.63
W115B	1482518.70	395476.96
W116	1482455.17	395860.17
W117	1482385.68	395860.23
W118	1482385.68	395900.23
W119	1482443.54	395900.18
W120	1482570.30	396349.32
W121	1482576.65	396402.32
W121A	1482576.65	396419.57
W122	1482543.98	396419.57
W122A	1482543.98	396464.81
W122B	1482576.60	396464.80
W122C	1482576.53	396522.52
W122D	1482543.47	396522.93
W122E	1482544.03	396588.49
W122F	1482552.46	396616.61
W122G	1482546.06	396634.00
W123	1482387.32	396633.25
W123A	1482387.32	396519.57
W123B	1482319.76	396519.50
W123C	1482318.88	396714.91
W123D	1482515.99	396714.91
W123E	1482480.92	396811.78
W123F	1482645.71	396811.59
W123G	1482645.78	396632.93
W124	1482733.43	396638.17
W124A	1482800.34	396399.52
W124B	1482850.14	396399.52
W124C	1482850.14	396429.68
W124D	1482800.34	396429.68
W124E	1482736.11	396444.56
W124F	1482733.43	396444.54
W124G	1482736.30	396408.59
W125	1482721.30	396408.51
W125A	1482721.52	396368.51
W125B	1482736.52	396368.59
W125C	1482736.75	396326.40
W125D	1482664.36	396326.40
W126	1482638.19	396212.06
W127	1482643.76	396208.94
W128	1482643.72	396197.83
W129	1482655.72	396191.79
W130	1482608.58	396024.73
W132	1482595.23	395759.93
W133	1482660.82	395396.78
W134	1482676.44	395364.38
W135	1482750.70	395341.88
W136	1482805.12	395267.65
W137	1482813.98	395108.35
W138	1482894.91	394788.22
W139	1482448.95	394675.46

LEVEE CENTERLINE COORDINATES

POINT	DESCRIPTION	NORTHING	EASTING	STATION	OFFSET
C64	CV #6-5 P.T.	1482823.20	394830.81	23+04.29	0.00'
C65	P.I.	1482778.60	394955.78	24+36.36	0.00'
C66	P.I.	1482764.22	394996.07	24+79.04	0.00'
C66A	P.I.	1482759.33	394996.07	24+83.93	0.00'
C67	P.I.	1482759.33	395138.22	26+26.20	0.00'
C67A	P.I.	1482694.36	395138.22	26+91.52	0.00'
C67B	P.I.	1482661.20	395138.22	27+24.12	0.00'
C67C	P.I.	1482661.20	395175.21	27+61.10	0.00'
C68	P.I.	1482645.07	395175.21	27+77.25	0.00'
C69	P.I.	1482645.07	395196.76	27+98.86	0.00'
C70	P.I.	1482629.88	395196.76	28+14.05	1.16'
C71	P.I.	1482629.88	395238.98	28+56.37	0.00'
C72	P.I.	1482607.77	395238.98	28+78.33	1.16'
C73	P.I.	1482607.77	395363.14	30+02.56	0.00'
C74	CV #6-9 P.C.	1482530.80	395781.08	34+47.87	0.00'
C75	CV #6-9 P.I.	1482509.73	395895.49	35+44.31	11.39'
C76	CV #6-9 P.T.	1482541.33	396007.44	36+56.38	0.00'
C77	CV #6-10 P.C.	1482606.29	396237.62	38+95.42	0.00'
C78	CV #6-10 P.I.	1482633.09	396332.50	39+92.04	7.01'
C79	CV #6-10 P.T.	1482632.60	396431.20	40+91.57	0.00'
C80	END LEVEE	1482632.29	396493.37	41+53.00	0.00'

ESTABLISHED HORIZONTAL & VERTICAL CONTROL STATION

POINT	NORTHING	EASTING	ELEVATION
△14	1483092.67	394557.08	594.92
△15	1482692.47	395089.39	599.86
△16	1482396.88	396553.85	600.50

ESTABLISHED BENCHMARKS

BENCHMARK	AGENCY	ELEVATION	LOCATION
DNR TBM		601.622	CHISELED TRIANGLE IN SOUTH CONCRETE ABUTMENT ON THE CONRAIL RAILROAD BRIDGE

FLOWAGE EASEMENT COORDINATES

POINT	DESCRIPTION	NORTHING	EASTING
B11	P.I.	1482894.54	394612.52
B12	P.I.	1483182.14	394625.63
B13	P.I.	1483173.51	395069.47
B14	P.I.	1482814.13	395066.96

PEDISTRIAN BRIDGE COORDINATES

POINT NO.	DESCRIPTION	COORDINATES NORTHING	EASTING
BR-03	INSIDE FACE OF ABUTMENT	1482336.89	395336.28
BR-04	INSIDE FACE OF ABUTMENT	1482565.89	395479.30
BR-05	INSIDE FACE OF ABUTMENT	1482347.98	396671.41
BR-06	INSIDE FACE OF ABUTMENT	1482579.45	396686.99

NOTES:

COORDINATES WERE TAKEN AT THE INSIDE FACE OF THE ABUTMENT AT THE CENTERLINE OF THE BRIDGE, AS SHOWN ON DETAIL 'A'.

BRIDGE ABUTMENTS AND INTERMEDIATE BENTS ARE PERPENDICULAR TO THE CENTERLINE OF THE BRIDGE.

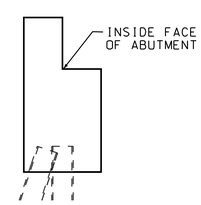

DETAIL 'A'

CURVE DATA

LEVEE

△1 REVISED CURVE DATA

CV #6-5

DELTA 41°31'40.00" (LT)
TANGENT = 166.82'
LENGTH = 318.91'
RADIUS = 440.00'

CV #6-9

DELTA= 26°11'41.13" (LT)
TANGENT = 116.33'
LENGTH = 228.59'
RADIUS = 500.00'

CV #6-10

DELTA = 16°02'33.65" (RT)
TANGENT = 98.64'
LENGTH = 196.00'
RADIUS = 700.00'

WORK LIMITS

CV #6-13

DELTA = 35°05'41" (LT)
TANGENT = 145.46'
LENGTH= 281.76'
RADIUS= 460.00'

CV #6-13A

DELTA = 25°44'51.00" (RT)
TANGENT = 135.99'
LENGTH= 267.38'
RADIUS= 595.00'

CV #6-15

DELTA = 43° 04' 42.97" (LT)
TANGENT = 136.17
LENGTH = 259.39
RADIUS = 345.00

100 50 0 100 200
1 INCH = 100 FEET

LEGEND

(C1)	CENTERLINE POINT AT LEVEE/I-WALL
(W1)	WORK LIMIT POINT
-·-·-·-·-	LEVEE/I-WALL CENTERLINE
----------	DITCH CENTERLINE
- - - - - -	WORK LIMIT LINE

NOTES:

1. FOR SYMBOLS, ABBREVIATIONS, AND GENERAL NOTES SEE SHEETS G-03 AND G-04.
2. ALL COORDINATES ARE BASED ON INDIANA STATE PLANE COORDINATES ZONE WEST, NAD27.
3. FOR CROSS SECTION SEE SHEETS C-39, C-40, AND C-41.
4. FOR PLAN AND PROFILE SEE SHEETS C-23, C-24 AND C-25.
5. FOR ACCESS RAMPS COORDINATES SEE SHEET C-58.
6. FOR DITCH COORDINATES SEE C-24.
7. FOR CULVERT AND GATEWELL COORDINATES SEE SHEETS C-46, C-47 AND C-48.

US Army Corps of Engineers
Chicago District

SYMBOL	AMENDMENT DESCRIPTION	DATE APPROVED	SYMBOL	DESCRIPTION	DATE APPROVED
△	CHANGES IDENTIFIED NEXT TO BUBBLE				

DESIGNED BY: JAG
DATE: AUG 2007
DRAWN BY: DB
SCALE: AS SHOWN
CHECKED BY: WK
SOLICITATION NUMBER: W912P6-07-B-0006
SUBMITTED BY: JOHN GROBOSKI
DATE:

U.S. ARMY ENGINEER DISTRICT
CORPS OF ENGINEERS
CHICAGO, ILLINOIS

LITTLE CALUMET RIVER, INDIANA
LOCAL FLOOD PROTECTION
STAGE V, PHASE 2 - LEVEE

WORK LIMITS AND
CONTROL DATA LEVEE, 6N
STA. 20+00 TO STA. 41+54

SHEET REFERENCE NUMBER:
C-10
SHEET 14 OF 138

PLOT DATE: 8/24/2007
FILENAME: D:\working\dms10534\C55C10AD1.DGN

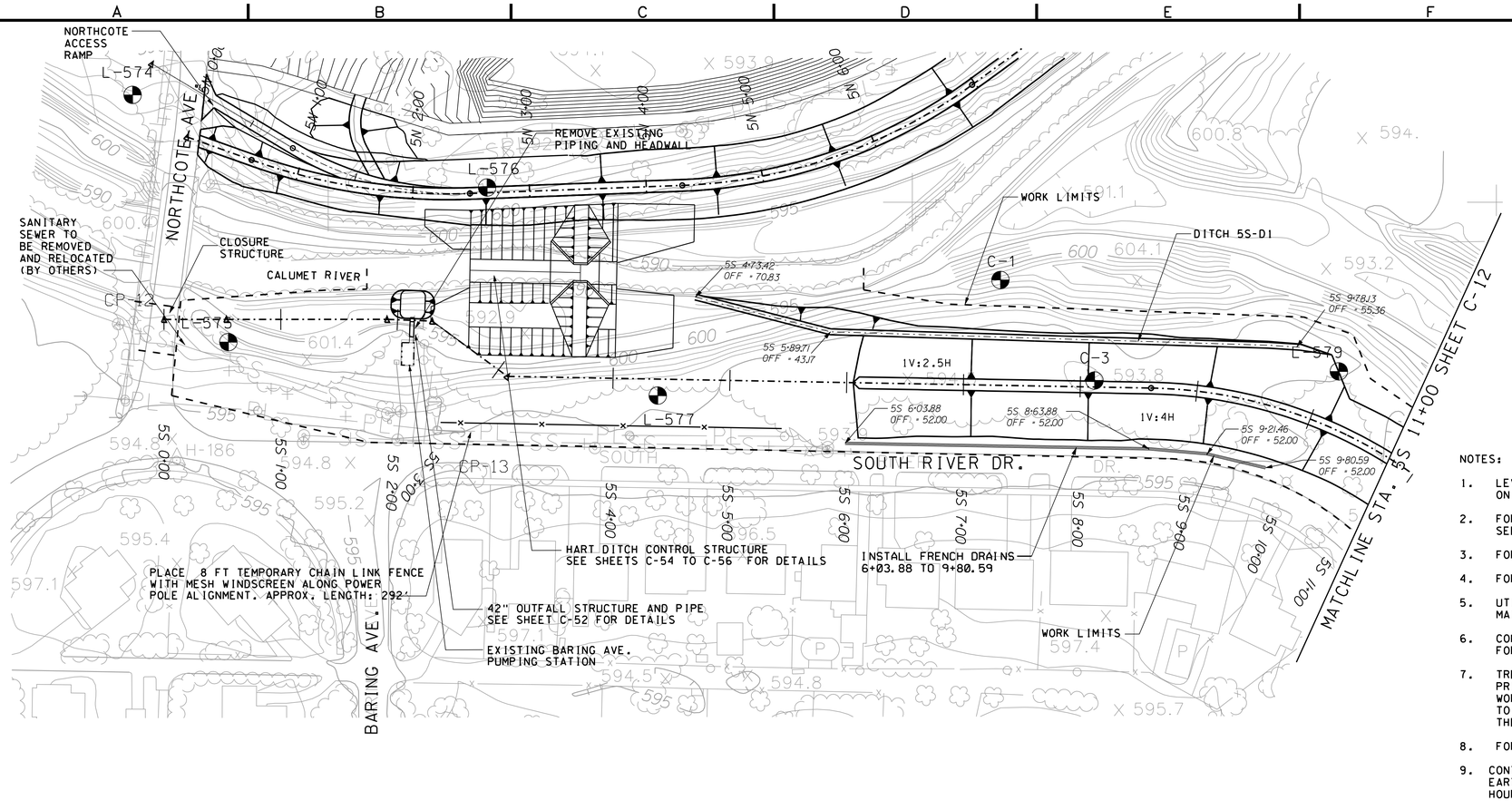

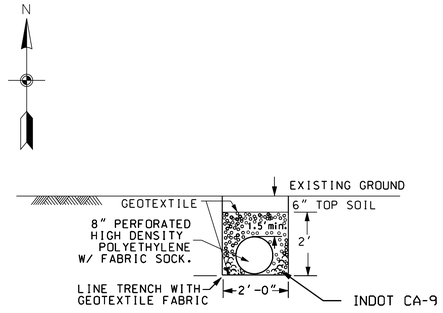

FRENCH DRAIN DETAIL

NOTES:

1. LEVEE AND FLOODWALL CONTROL POINTS ARE LISTED ON WORK LIMITS SHEET C-01.
2. FOR SYMBOLS, ABBREVIATIONS, AND GENERAL NOTES SEE SHEETS G-03 AND G-04.
3. FOR LEVEE TYPICAL SECTIONS SEE SHEET C-42.
4. FOR FLOODWALL DETAILS AND PROFILE SEE SHEETS S-01, S-02, S-03, S-07, AND S-09.
5. UTILITY SERVICE TO BARING AVE PUMPING STATION SHALL BE MAINTAINED DURING CONSTRUCTION.
6. CONTRACTOR SHALL PROTECT AND PROVIDE TEMPORARY SUPPORT FOR UTILITY POLES DURING CONSTRUCTION.
7. TREE REMOVAL SHALL BE LIMITED TO WITHIN 15 FT OF LEVEE*WALL FOOTPRINT. PRIOR APPROVAL IS REQUIRED FOR ALL OTHER TREE REMOVAL WITHIN THE WORKLIMITS OF 5S ALIGNMENT. TREES WITHIN THE WORK LIMITS THAT ARE NOT TO BE REMOVED SHALL HAVE TEMPORARY PROJECT SAFETY FENCING PLACED AROUND THE DRIP LINE OF THE TREES.
8. FOR CROSS SECTIONS SEE SHEET C-26.
9. CONTRACTOR SHALL NOT STORE ANY EQUIPMENT OR STOCKPILE MATERIALS, OTHER THAN EARTH OR ROCK FILL WITHIN THE WORKLIMITS OF 5S 0+00 TO 5S 35+00, BEYOND 24 HOURS, WITHOUT PRIOR APPROVAL FROM THE CONTRACTING OFFICER.

50 0 50 100
1 INCH = 50 FEET

PLAN

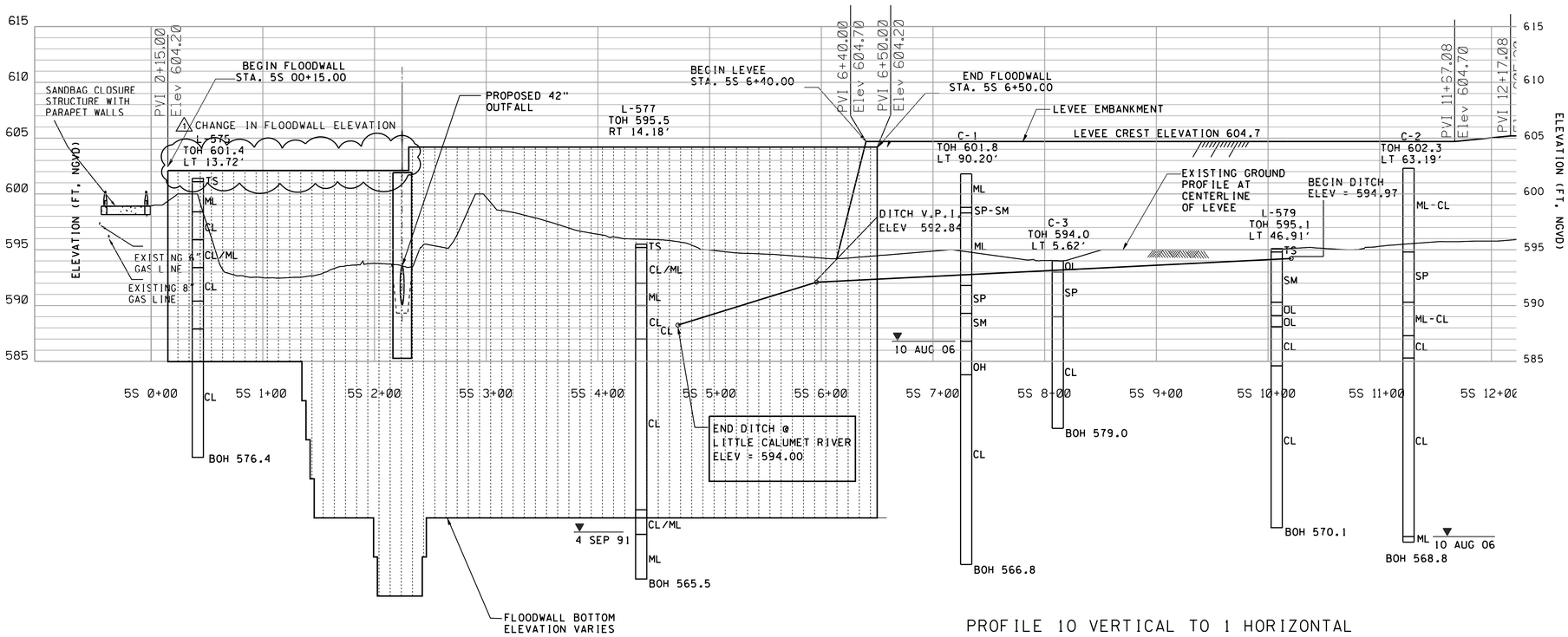

PROFILE 10 VERTICAL TO 1 HORIZONTAL

US Army Corps of Engineers Chicago District

SYMBOL	AMENDMENT DESCRIPTION	DATE APPROVED	SYMBOL	DESCRIPTION	DATE APPROVED
CHANGES IDENTIFIED NEXT TO BUBBLE					

DESIGNED BY: JAG
DATE: AUG 2007
DRAWN BY: DB
SCALE: AS SHOWN
CHECKED BY: WK
SOLICITATION NUMBER: W912P6-07-B-0006
SUBMITTED BY: JOHN GROBOSKI
DATE:

U.S. ARMY ENGINEER DISTRICT
CORPS OF ENGINEERS
CHICAGO, ILLINOIS

LITTLE CALUMET RIVER, INDIANA
LOCAL FLOOD PROTECTION
STAGE V, PHASE 2 - LEVEE

PLAN AND PROFILE
STA. 5S 0+00 TO STA. 5S 11+00

SHEET REFERENCE NUMBER:
C-11
SHEET 15 OF 138

PLOT DATE: 8/24/2007
FILENAME: D:\working\dms10534\C5SC11A001.DGN

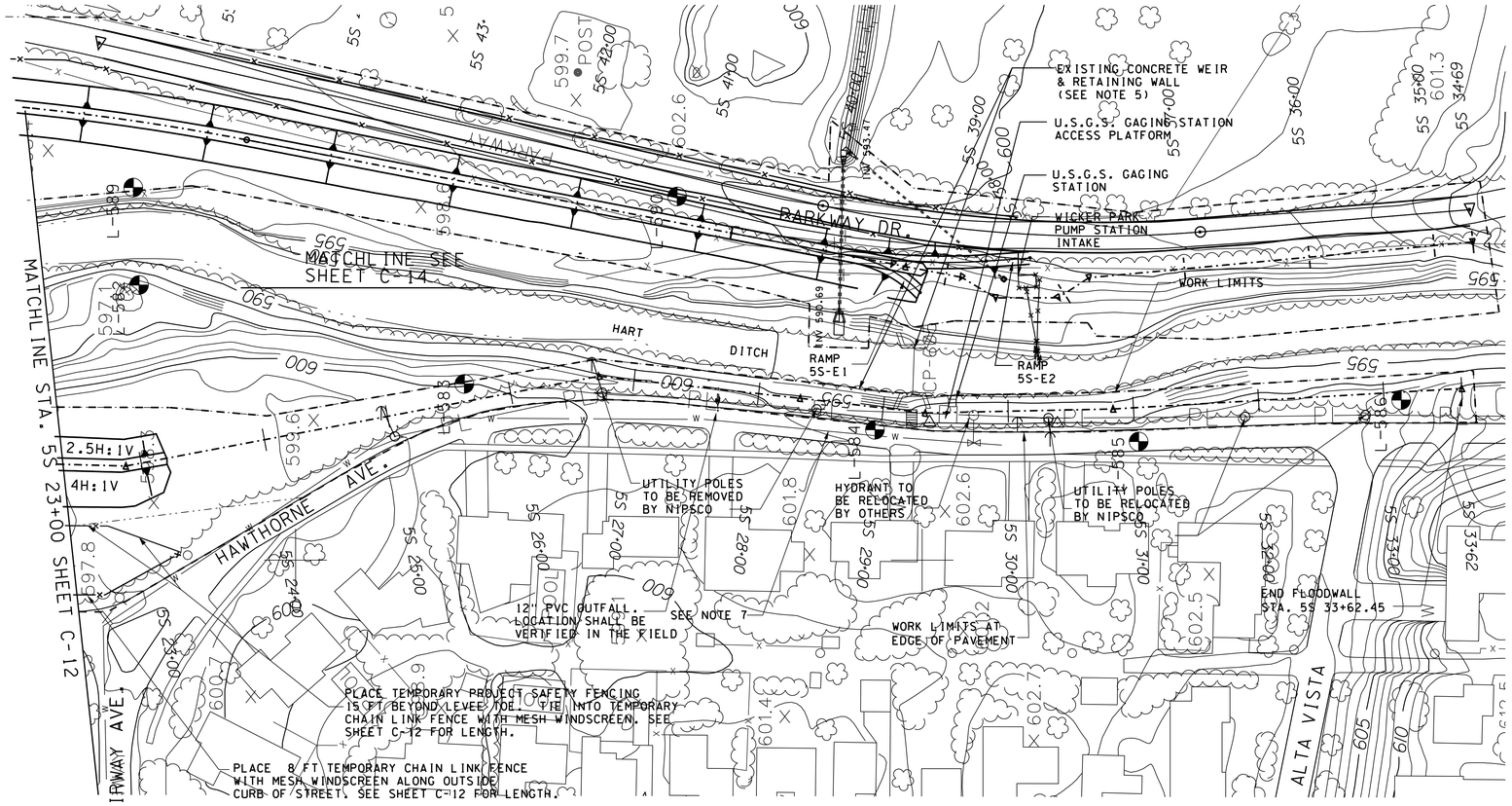

PLAN

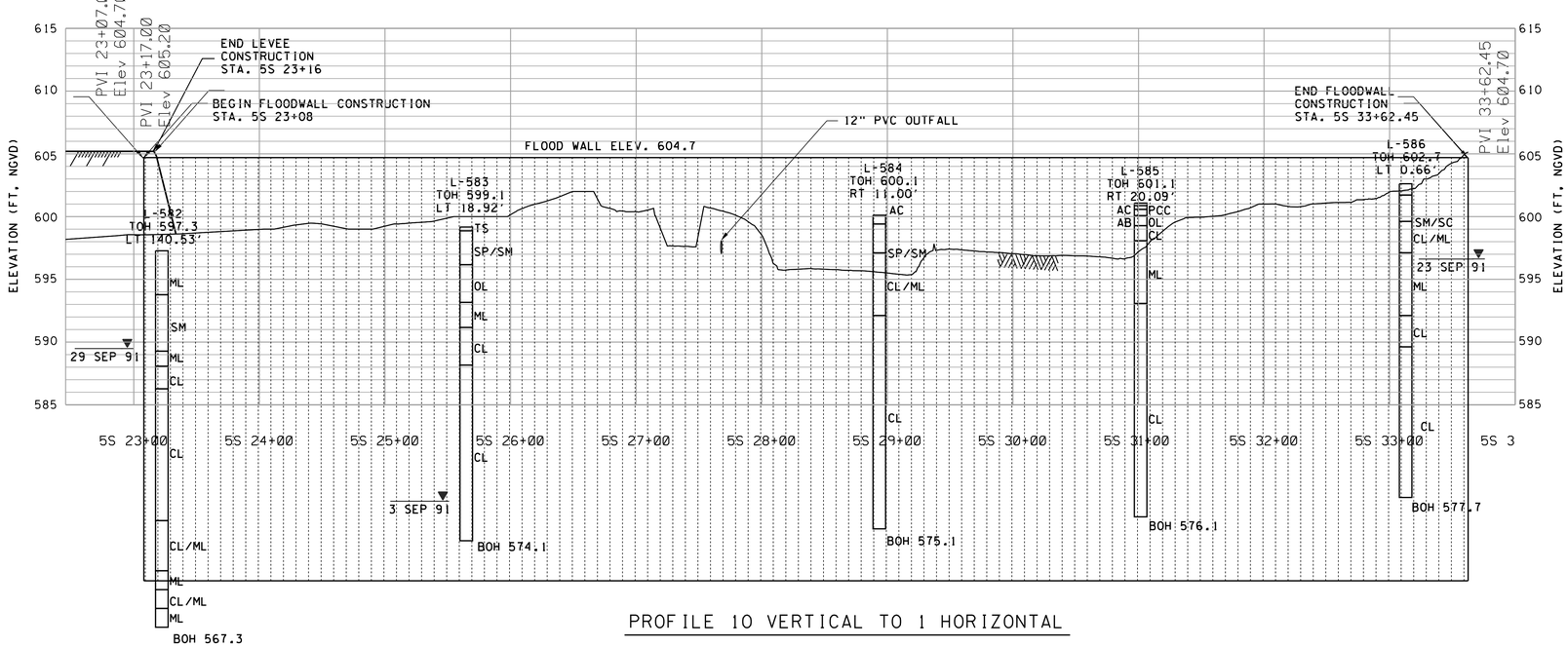

PROFILE 10 VERTICAL TO 1 HORIZONTAL

NOTES:

1. LEVEE AND I-WALL CONTROL POINTS ARE LISTED ON WORK LIMITS SHEET C-02.
2. FOR SYMBOLS, ABBREVIATIONS, AND GENERAL NOTES SEE SHEETS G-03 AND G-04.
3. FOR LEVEE TYPICAL SECTIONS SEE SHEETS C-42.
4. FOR I-WALL DETAILS AND PROFILE SEE SHEETS S-04, S-05, S-06, S-07, AND S-09
5. THE EXISTING CONCRETE WEIR AND RETAINING WALL WERE LOCATED FROM DATA RECEIVED FROM OTHERS AND IS BELIEVED TO BE ACCURATE. CONTRACTOR SHALL DETERMINE THE EXACT LOCATION AND NOTIFY THE CONTRACTING OFFICER OF ANY POTENTIAL IMPACTS TO THE FLOODWALL IN THIS AREA.
6. UTILITY SERVICE TO WICKER PARK PUMP STATION SHALL BE MAINTAINED DURING CONSTRUCTION..
7. CONTRACTOR SHALL CONTACT THE TOWN OF MUNSTER AT (219)836-8810 72 HOURS PRIOR TO ANY CONSTRUCTION OF THE I-WALLS SO THAT THE WATERLINE MAY BE TEMPORARILY OUT OF SERVICE. THE LOCATION OF THE 12" WATERLINE SHALL BE VERIFIED IN THE FIELD. TOWN OF MUNSTER STATED THAT THE WATERLINE IS APPROX. 1 FT EAST OF HAWTHORN AVE CURB, WHERE AS THE EXISTING TOPOGRAPHIC DISPLAYS IT MORE IN THE CENTER OF THE ROAD.
8. FOR U.S.G.S. GAGING STATION ACCESS LADDER DETAILS SEE SHEET S-05.
9. TREE REMOVAL SHALL BE LIMITED TO WITHIN 15 FT OF LEVEE*WALL FOOTPRINT. PRIOR APPROVAL IS REQUIRED FOR ALL OTHER TREE REMOVAL WITHIN THE WORKLIMITS OF 5S ALIGNMENT. TREES WITHIN THE WORK LIMITS THAT ARE NOT TO BE REMOVED SHALL HAVE TEMPORARY PROJECT SAFETY FENCING PLACED AROUND THE DRIP LINE OF THE TREES.
10. FOR CROSS SECTIONS SEE SHEETS C-27 AND C-28
11. CONTACT FRANK JANOSI FROM NIPSCO, FOR UTILITY CONCERNS OF OVERHEAD POWERLINES. SEE SHEET G-04 FOR CONTACT INFORMATION.

US Army Corps of Engineers
Chicago District

SYMBOL	AMENDMENT DESCRIPTION	DATE	APPROVED	SYMBOL	DESCRIPTION	DATE	APPROVED
1	CHANGED REFERENCE TO LADDER						

DESIGNED BY: JAG
DATE: AUG 2007
DRAWN BY: DB
SCALE: AS SHOWN
CHECKED BY: WK
SOLICITATION NUMBER: W912P6-07-B-0006
SUBMITTED BY: JOHN GROBOSKI
DATE:

U.S. ARMY ENGINEER DISTRICT
CORPS OF ENGINEERS
CHICAGO, ILLINOIS

LITTLE CALUMET RIVER, INDIANA
LOCAL FLOOD PROTECTION
STAGE V, PHASE 2 - LEVEE

PLAN AND PROFILE
STA. 5S 23+00 TO STA. 5S 33+62

SHEET REFERENCE NUMBER:
C-13
SHEET 17 OF 138

PLOT DATE: $DATE$
FILENAME: $FILENAME$

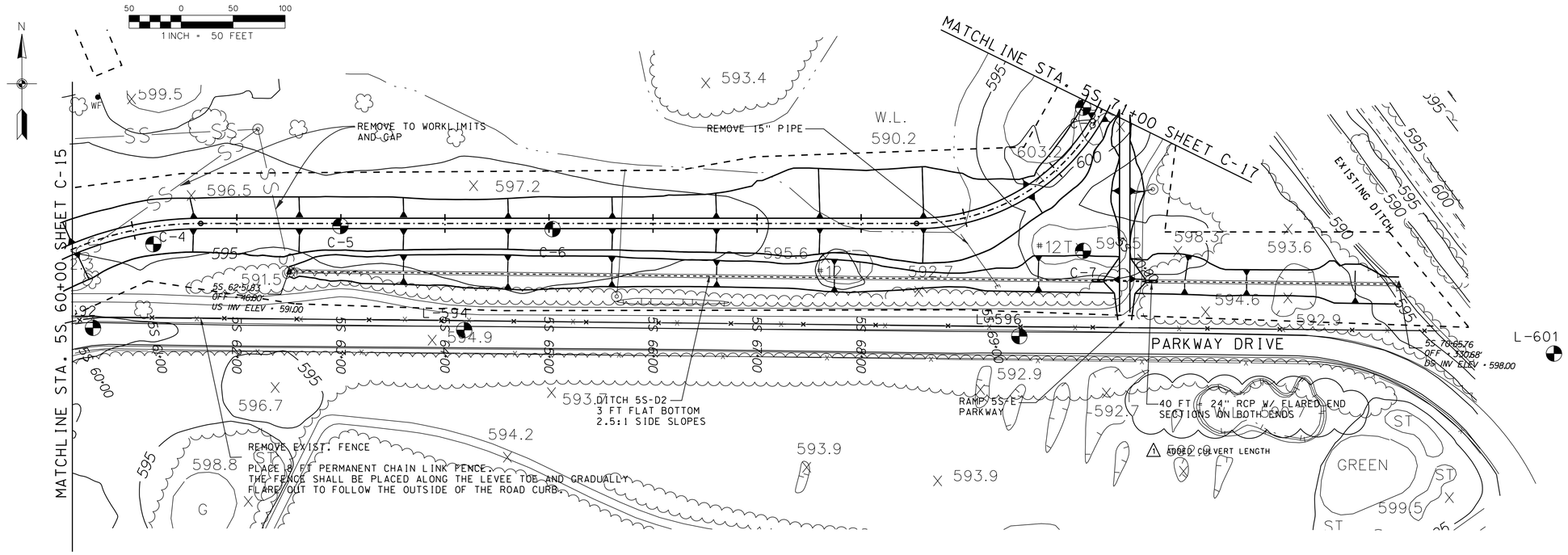

PLAN

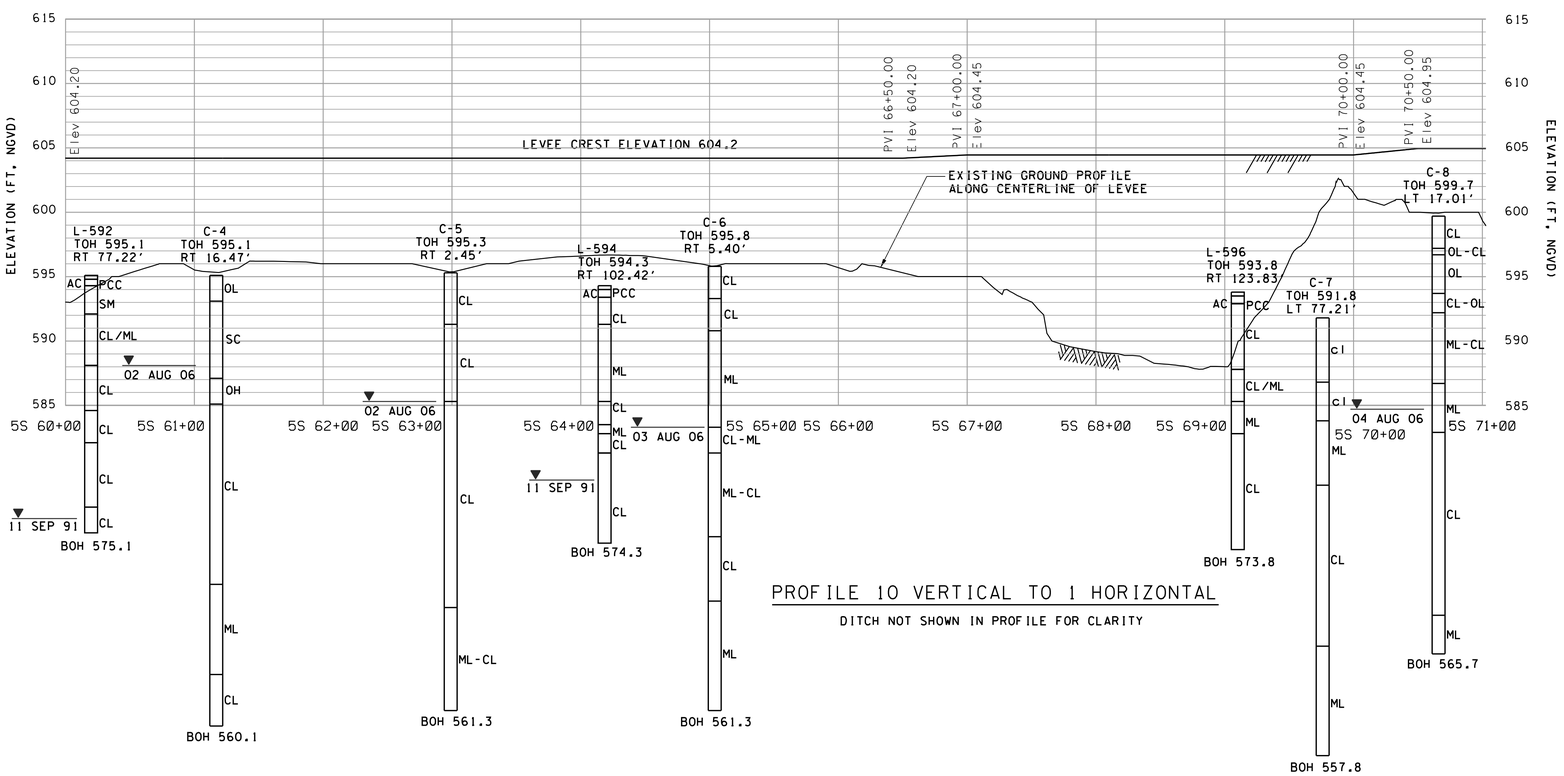

PROFILE 10 VERTICAL TO 1 HORIZONTAL

DITCH NOT SHOWN IN PROFILE FOR CLARITY

NOTES:

1. LEVEE AND FLOODWALL CONTROL POINTS ARE LISTED ON WORK LIMITS SHEET C-04.
2. FOR SYMBOLS, ABBREVIATIONS, AND GENERAL NOTES SEE SHEETS G-03 AND G-04.
3. FOR LEVEE TYPICAL SECTIONS SEE SHEETS C-42.
4. FOR RECREATION TRAIL DETAILS AND TYPICAL SECTION SEE SHEETS R-07.
5. TREE REMOVAL SHALL BE LIMITED TO WITHIN 15 FT OF LEVEE FOOTPRINT. PRIOR APPROVAL IS REQUIRED FOR ALL OTHER TREES REMOVAL WITHIN THE WORKLIMITS OF 5S ALIGNMENT.
6. CONTRACTOR SHALL FIELD LOCATE, CUT AND CAP EXIST. SPRINKLER CONDUIT. THE CONDUIT SHALL BE REMOVED WITHIN THE WORKLIMITS.
7. FOR CROSS SECTIONS SEE SHEET C-31 AND C-32.
8. REFER TO SUBPART, "MAINTAINING FLOOD PROTECTION AND DRAINAGE DURING CONSTRUCTION SECTION" CONTAINED IN SECTION 31 00 00 "EARTHORK" FOR GAP IN LEVEE DURING CONSTRUCTION.
9. FOR ACCESS RAMP SEE SHEET C-59.
10. POTENTIAL CLAY SOURCE OF UNKNOW QUANTITY AND QUALITITY IS LOCATED NEAR PROJECT LIMITS. CONTRACTOR SHALL COORDINATE WITH DENNIS SIMALA FROM THE NORTH TOWNSHIP, SEE SHEET G-04 FOR CONTACT INFORMATION. IF USED, CONTRACTOR SHALL SUBMIT TEST RESULTS AS SPECIFIED IN THE EARTHWORK SECTION OF THE SPECIFCATION.
11. SEE SHEET C-53 FOR ACCESS TO THE LEVEE FOR 5S 35+00 TO 5S 75+00. ACCESS SHALL BE COORDINATED WITH DENNIS SIMALA.

US Army Corps of Engineers Chicago District

SYMBOL	AMENDMENT DESCRIPTION	DATE APPROVED	SYMBOL	DESCRIPTION	DATE APPROVED
CHANGES IDENTIFIED NEXT TO BUBBLE					

DESIGNED BY: JAG
DATE: AUG 2007
DRAWN BY: DB
SCALE: AS SHOWN
CHECKED BY: WK
SOLICITATION NUMBER: W912P6-07-B-0006
SUBMITTED BY: JOHN GROBOSKI
DATE:

U.S. ARMY ENGINEER DISTRICT
CORPS OF ENGINEERS
CHICAGO, ILLINOIS

LITTLE CALUMET RIVER, INDIANA
LOCAL FLOOD PROTECTION
STAGE V, PHASE 2 - LEVEE

PLAN AND PROFILE
STA. 5S 60+00 TO STA. 5S 71+00

SHEET REFERENCE NUMBER:
C-16

PLOT DATE: $DATE$
FILENAME: $FILENAME$

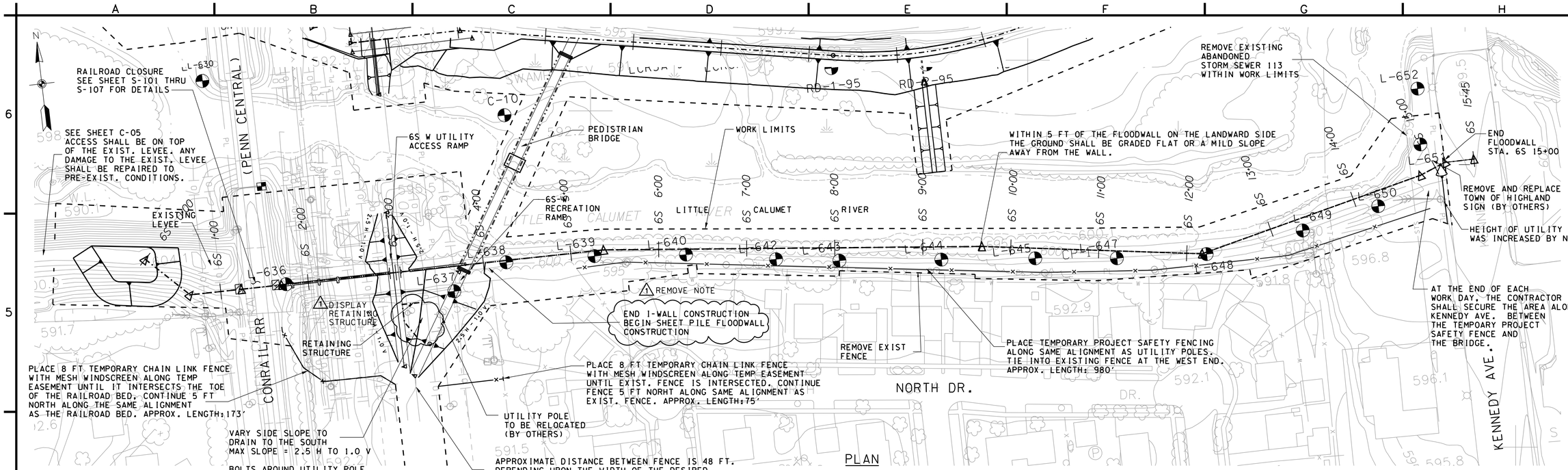

PLAN

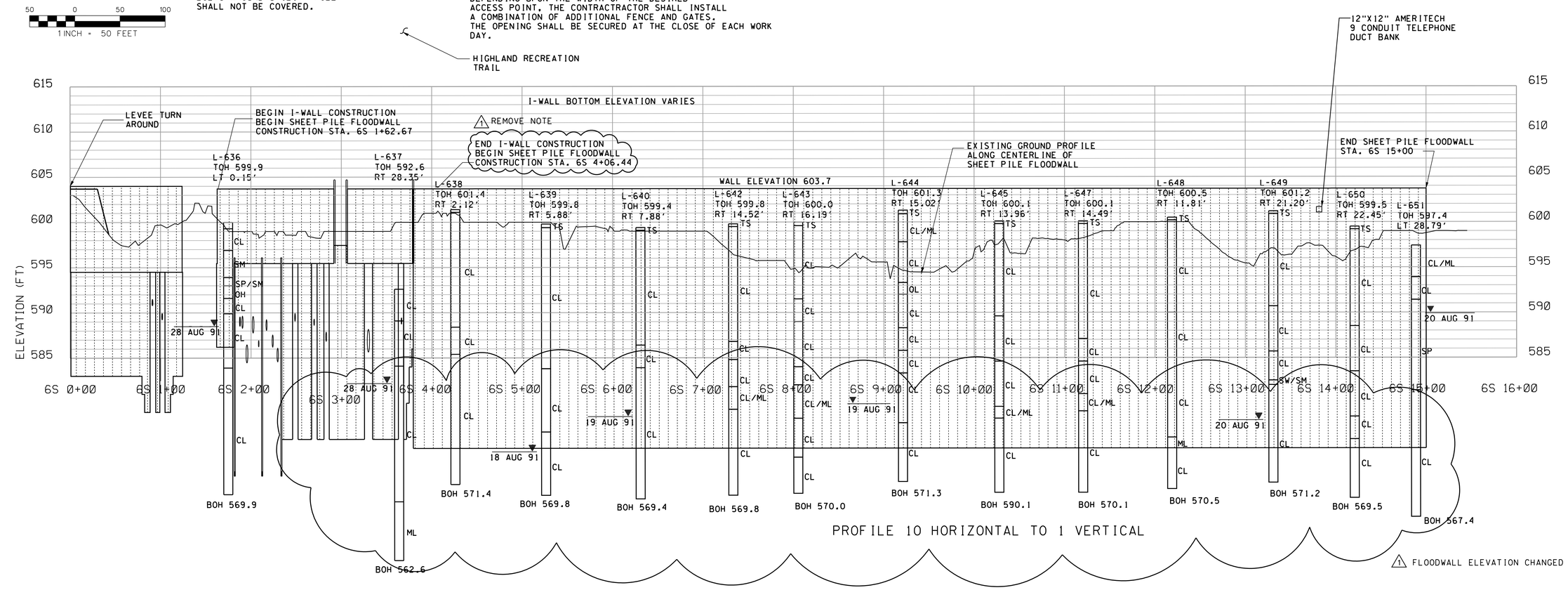

NOTES:

1. FOR WORK LIMITS SEE SHEET C-05.
2. FOR SYMBOLS, ABBREVIATIONS, AND GENERAL NOTES SEE SHEETS G-03 AND G-04.
3. FOR SHEET PILE FLOODWALL DETAILS AND PROFILE SEE SHEETS S-09.
4. FOR TYPICAL SECTIONS SEE SHEETS C-42.
5. FOR I-WALL DETAILS AND PROFILE SEE SHEETS S-23. (1) SHEET REFERENCE CHANGED
6. FOR UTILITY AND RECREATIONAL RAMP TYPICAL SECTIONS, DETAILS, AND PLAN AND PROFILE SEE SHEETS C-59.
7. CONTRACTOR SHALL REPAIR ANY DAMAGES TO THE HIGHLAND RECREATION TRAIL THAT OCCUR DURING THE CONSTRUCTION OF THE ACCESS ROADS AND WALLS.
8. FOR CROSS SECTIONS SEE SHEET C-33 AND C-34.
9. CONTRACTOR SHALL NOT STORE ANY EQUIPMENT OR STOCKPILE MATERIALS, OTHER THAN EARTH OR ROCK FILL WITHIN THE WORKLIMITS OF 6S 5+00 TO 6S 14+00, BEYOND 24 HOURS, WITHOUT PRIOR APPROVAL FROM THE CONTRACTING OFFICER.

US Army Corps of Engineers Chicago District

SYMBOL	AMENDMENT DESCRIPTION	DATE APPROVED	SYMBOL	DESCRIPTION	DATE APPROVED
(1)	CHANGES IDENTIFIED NEXT TO BUBBLE				

DESIGNED BY: JAG DATE: AUG 2007
DRAWN BY: DB SCALE: AS SHOWN
CHECKED BY: WK SOLICITATION NUMBER: W912P6-07-B-0006
SUBMITTED BY: JOHN GROBOSKI DATE:

U.S. ARMY ENGINEER DISTRICT CORPS OF ENGINEERS CHICAGO, ILLINOIS

LITTLE CALUMET RIVER, INDIANA
LOCAL FLOOD PROTECTION
STAGE V, PHASE 2 - LEVEE

PLAN AND PROFILE
STA. 6S 0+00 TO STA. 6S 15+45

SHEET REFERENCE NUMBER:
C-18

PLOT DATE: 8/24/2007
FILENAME: D:\working\ams10534\CS5C18AWD1.DGN

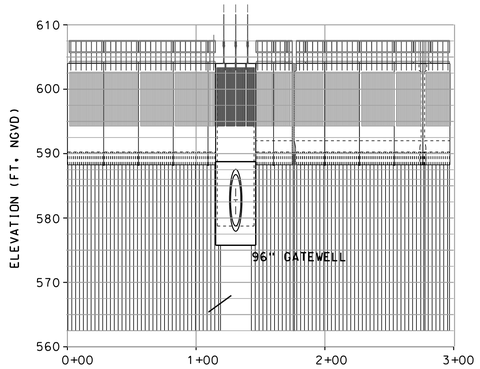

FLOODWALL PROFILE

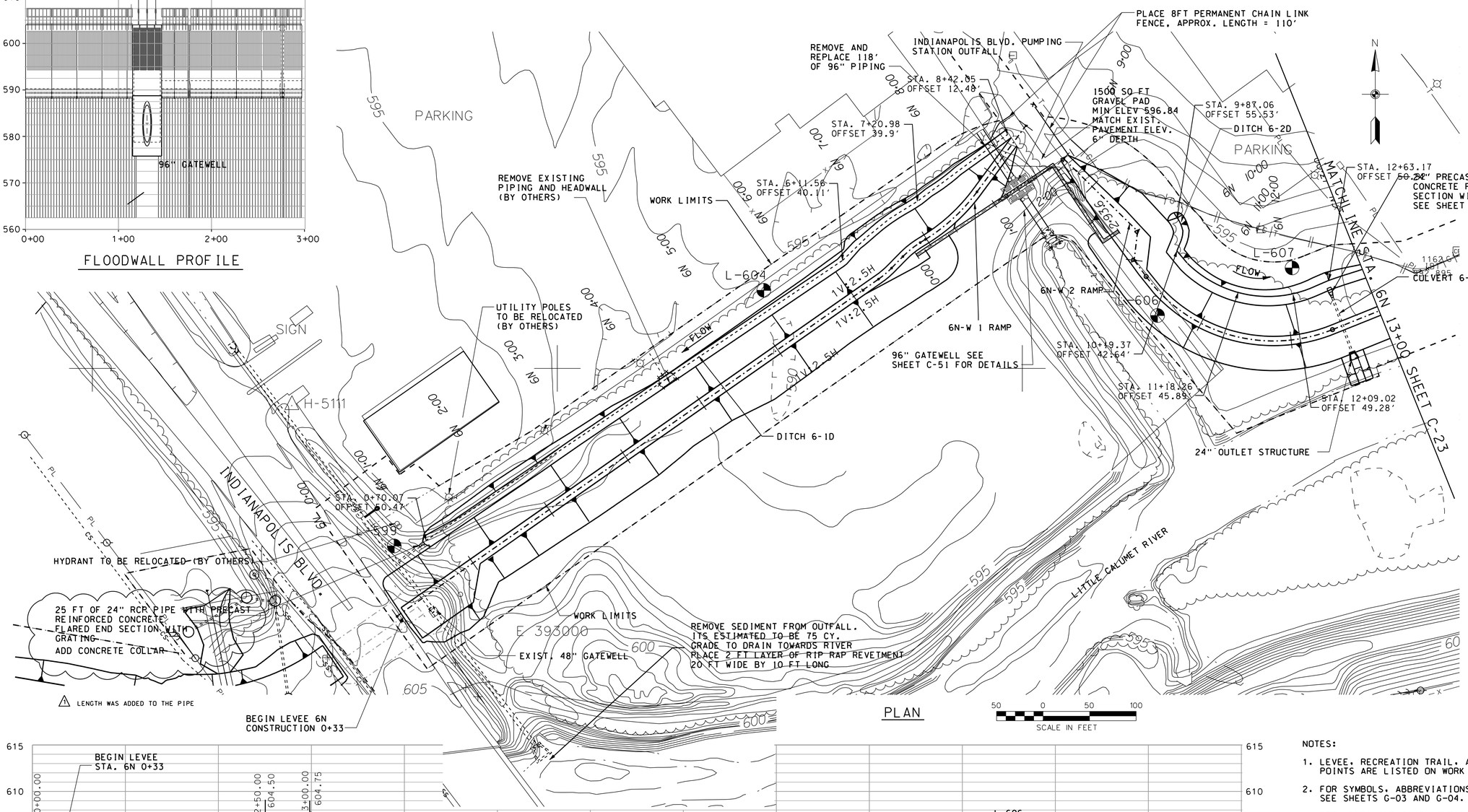

PLAN

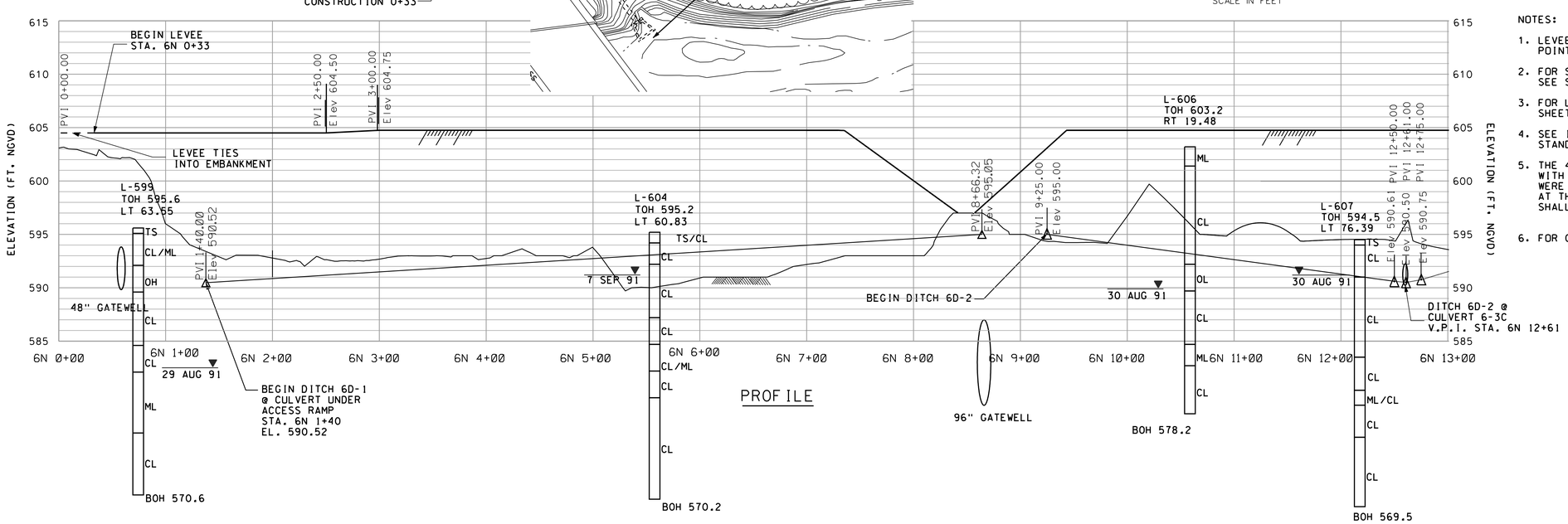

PROFILE

NOTES:

1. LEVEE, RECREATION TRAIL, AND DITCH CONTROLS POINTS ARE LISTED ON WORK LIMITS SHEET C-09.
2. FOR SYMBOLS, ABBREVIATIONS, AND GENERAL NOTES SEE SHEETS G-03 AND G-04.
3. FOR LEVEE AND DITCH TYPICAL SECTIONS SEE SHEET C-42.
4. SEE INDIANA DEPARTMENT OF TRANSPORTATION STANDARDS FOR CATCH BASIN AND CASTING DETAILS.
5. THE 48" GATEWELL, CULVERT 6-2C, 24" RCP PIPE WITH END SECTION, AND EMBANKMENT BY OTHERS WERE BASED ON THE BEST AVAILABLE INFORMATION AT THE TIME OF DESIGN. THE ACTUAL LOCATION SHALL BE VERIFIED BY THE CONTRACTOR.
6. FOR CROSS SECTIONS SEE SHEETS C-35 AND C-39.

US Army Corps of Engineers
Chicago District

SYMBOL	AMENDMENT DESCRIPTION	DATE APPROVED	SYMBOL	DESCRIPTION	DATE APPROVED

CHANGES IDENTIFIED NEXT TO BUBBLE

DESIGNED BY: JAG
DATE: AUG 2007
DRAWN BY: DB
SCALE: AS SHOWN
CHECKED BY: WK
SOLICITATION NUMBER: W912P6-07-B-0006
SUBMITTED BY: JOHN GROBOSKI
DATE:

U.S. ARMY ENGINEER DISTRICT
CORPS OF ENGINEERS
CHICAGO, ILLINOIS

LITTLE CALUMET RIVER, INDIANA
LOCAL FLOOD PROTECTION
STAGE V, PHASE 2 - LEVEE

PLAN AND PROFILE
STA. 6N 0+00 TO STA. 6N 13+00

SHEET REFERENCE NUMBER:
C-22
SHEET 26 OF 138

PLOT DATE: $DATE$
FILENAME: $FILENAME$

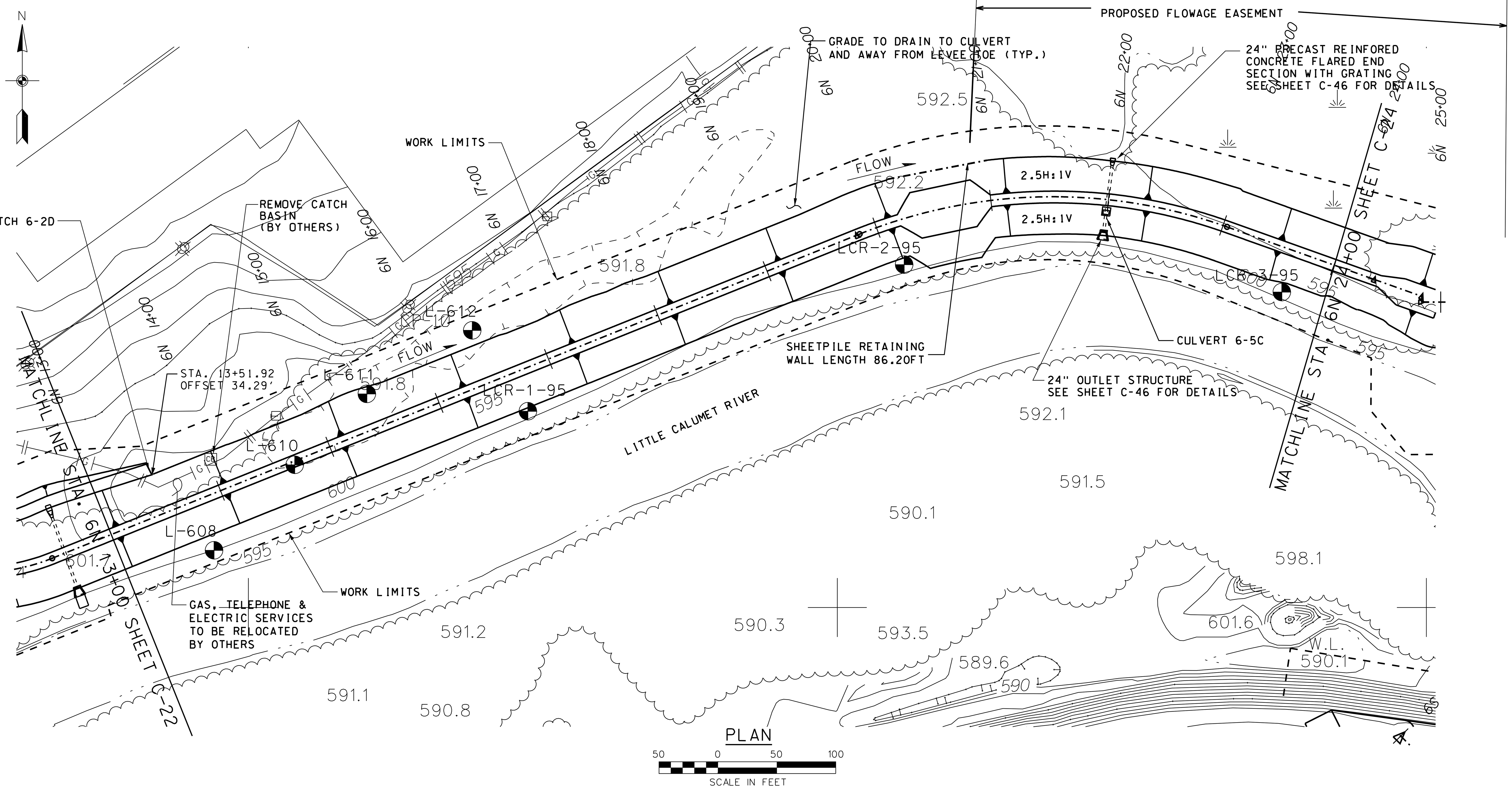

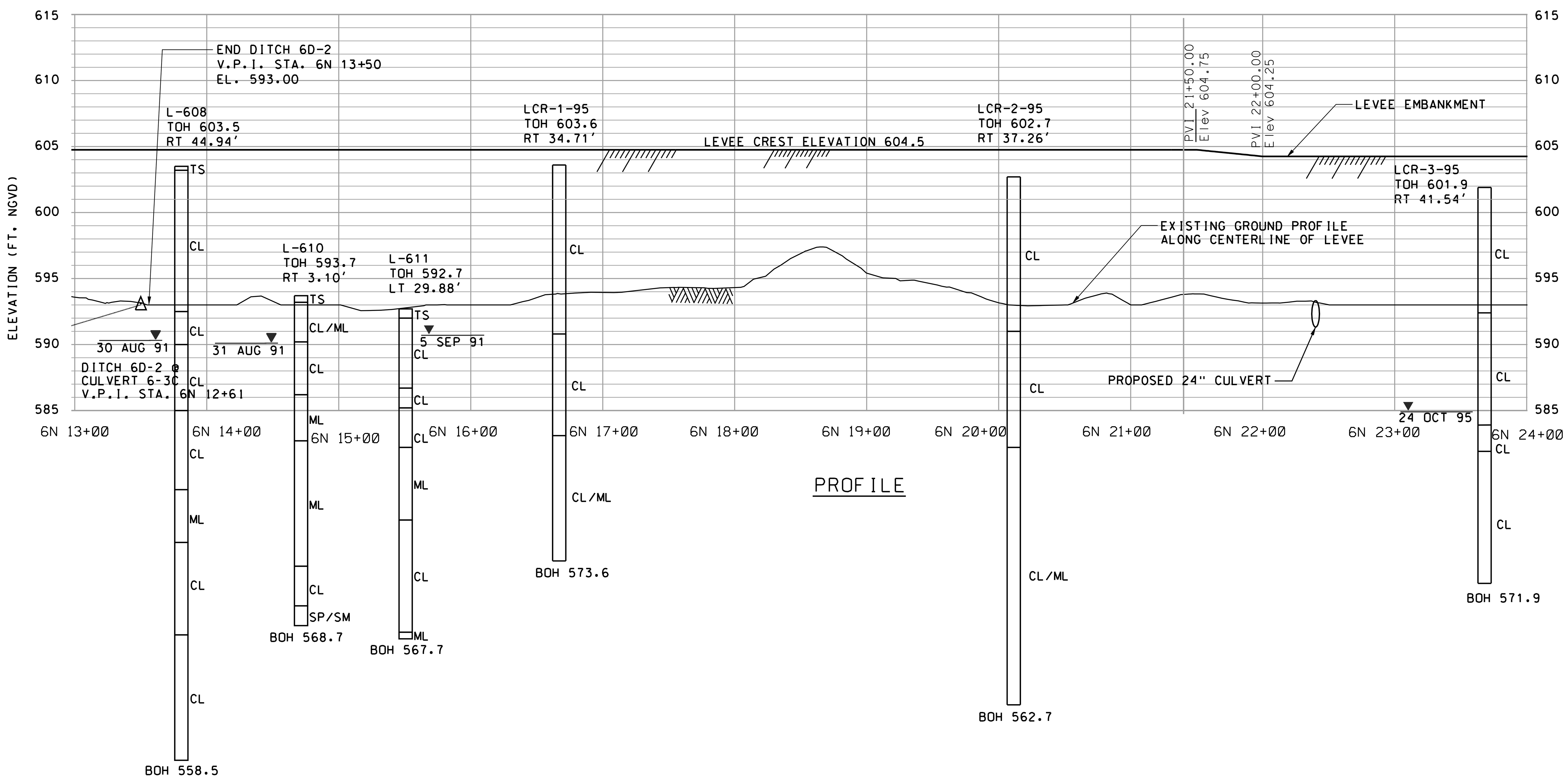

NOTES:

1. LEVEE AND DITCH CONTROL POINTS ARE LISTED ON WORK LIMITS SHEETS C-09 AND C-10.
2. FOR SYMBOLS, ABBREVIATIONS, AND GENERAL NOTES SEE SHEETS G-03 AND G-04.
3. FOR LEVEE AND DITCH TYPICAL SECTIONS SEE SHEETS C-42.
4. FOR CROSS SECTIONS SEE SHEETS C-39 AND C-40.
5. FOR RETAINING WALL AT TURNAROUND SEE SHEET S-14

US Army Corps of Engineers
Chicago District

SYMBOL	AMENDMENT DESCRIPTION	DATE	APPROVED

PROVIDED SHEET REFERENCE

DESIGNED BY: JAG | DATE: AUG 2007
DRAWN BY: DB | SCALE: AS SHOWN
CHECKED BY: WK | SOLICITATION NUMBER: W912P6-07-B-0006
SUBMITTED BY: JOHN GROBOSKI | DATE:

U.S. ARMY ENGINEER DISTRICT
CORPS OF ENGINEERS
CHICAGO, ILLINOIS

LITTLE CALUMET RIVER, INDIANA
LOCAL FLOOD PROTECTION
STAGE V, PHASE 2 - LEVEE

PLAN AND PROFILE
STA. 6N 13+00 TO STA. 6N 24+00

SHEET REFERENCE NUMBER:
C-23

SHEET 27 OF 138

PLOT DATE: $DATE$
FILENAME: $FILENAME$

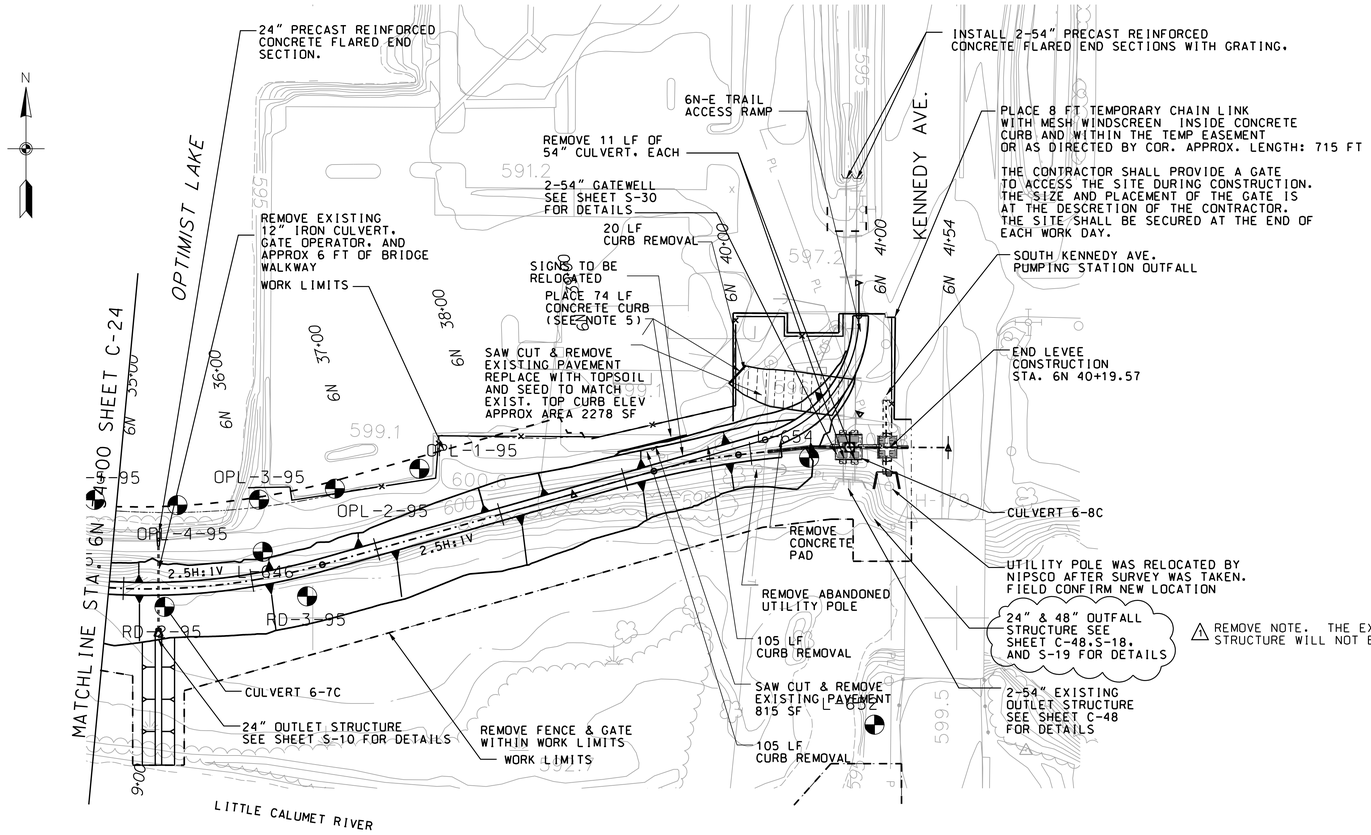

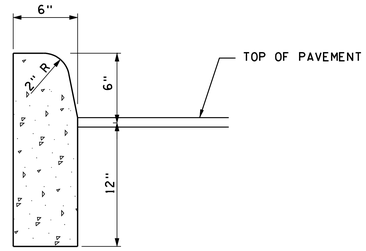

CONCRETE CURB
NOT TO SCALE

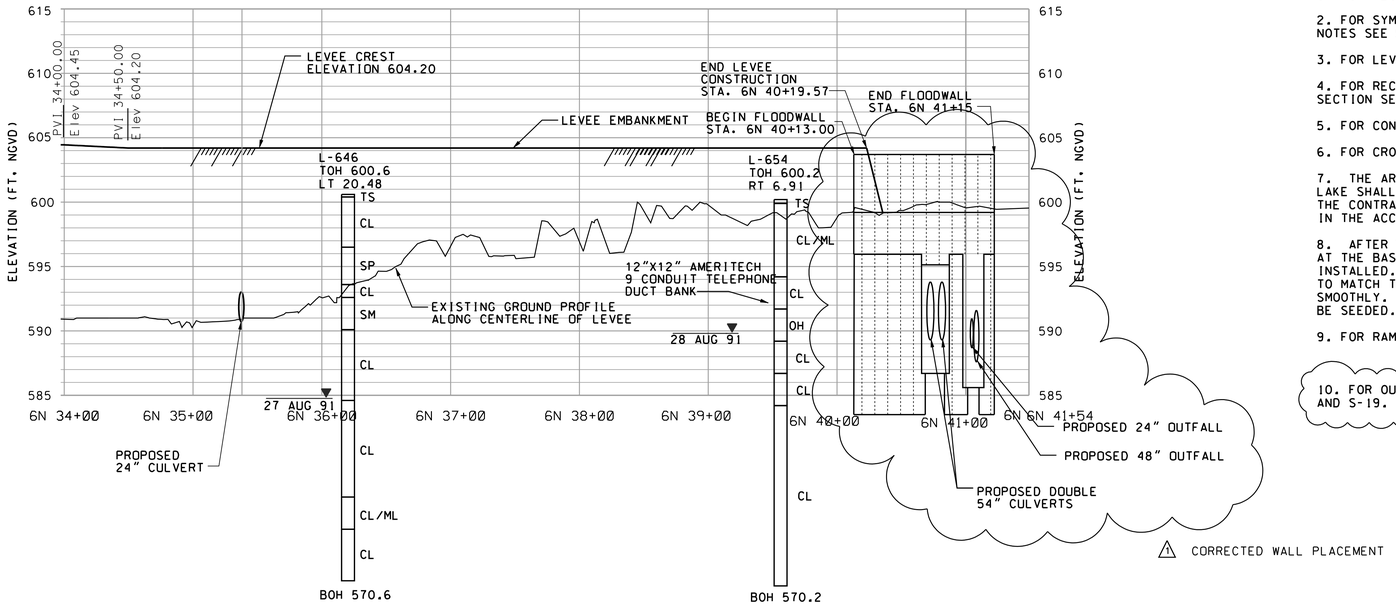

NOTES:

1. LEVEE AND RECREATION TRAIL CONTROL POINTS ON WORK LIMITS SHEET C-10.

2. FOR SYMBOLS, ABBREVIATIONS, AND GENERAL NOTES SEE SHEETS G-03 AND G-04.

3. FOR LEVEE TYPICAL SECTIONS SEE SHEETS C-42.

4. FOR RECREATION TRAIL DETAILS AND TYPICAL SECTION SEE SHEETS R-07.

5. FOR CONCRETE CURB DETAILS SEE THIS SHEET.

6. FOR CROSS SECTIONS SEE SHEETS C-40 AND C-41.

7. THE AREA ALONG THE SOUTHERN BANKS OF OPTIMIST LAKE SHALL BE GRUBBED OF ALL VEGETATION. THE CONTRACTOR SHALL INCLUDE THE REMOVAL IN THE ACCIDENT PREVENTION PLAN.

8. AFTER THE PAVEMENT HAS BEEN REMOVED AT THE BASE OF THE 6N-E RAMP AND CURB INSTALLED. THE AREA SHALL RECIEVE TOPSOIL TO MATCH THE TOP OF THE CURB AND GRADED SMOOTHLY. THE FINAL GRADED AREA SHALL BE SEEDED.

9. FOR RAMPS SEE SHEET C-58.

10. FOR OUTFALL STRUCTURE SEE SHEET S-18 AND S-19.

1 REMOVE NOTE. THE EXIST. OUTFALL STRUCTURE WILL NOT BE MODIFIED.

US Army Corps of Engineers Chicago District

SYMBOL	AMENDMENT DESCRIPTION	DATE APPROVED	SYMBOL	DESCRIPTION	DATE APPROVED
1	CHANGES IDENTIFIED NEXT TO BUBBLE				

DESIGNED BY: JAG
DATE: AUG 2007
DRAWN BY: DB
SCALE: AS SHOWN
CHECKED BY: WK
SOLICITATION NUMBER: W912P6-07-B-0006
SUBMITTED BY: JOHN GROBOSKI
DATE:

U.S. ARMY ENGINEER DISTRICT
CORPS OF ENGINEERS
CHICAGO, ILLINOIS

LITTLE CALUMET RIVER, INDIANA
LOCAL FLOOD PROTECTION
STAGE V, PHASE 2 - LEVEE

PLAN AND PROFILE
STA. 6N 34+00 TO STA. 6N 41+54

SHEET REFERENCE NUMBER:
C-25

PLOT DATE: 8/24/2007
FILENAME: D:\working\dms10534\LCS5C25AND10DN

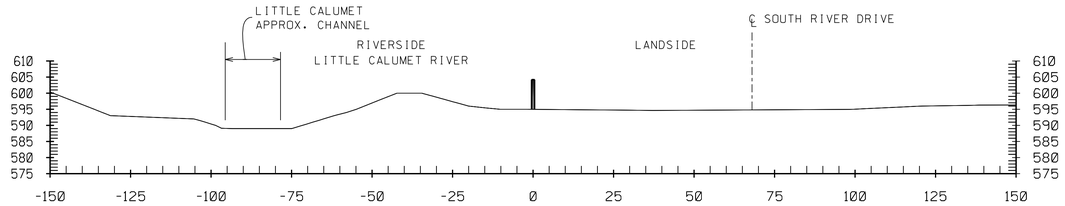

5S 5+00

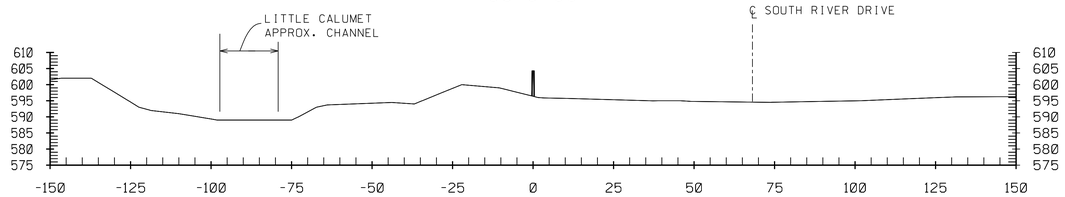

5S 4+00

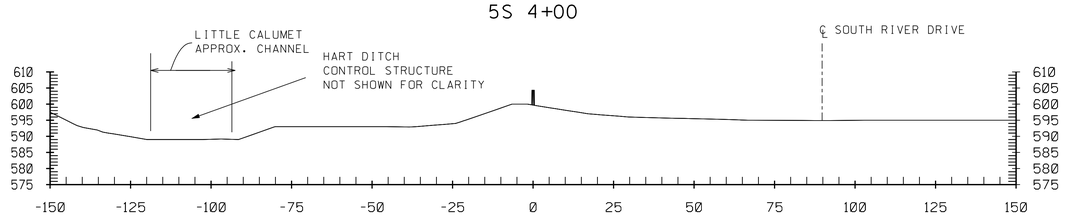

5S 3+00

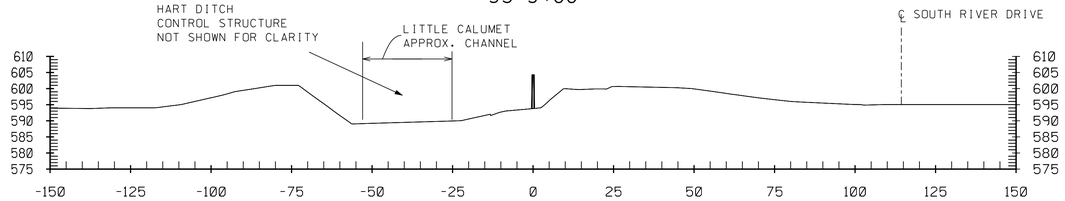

5S 2+00

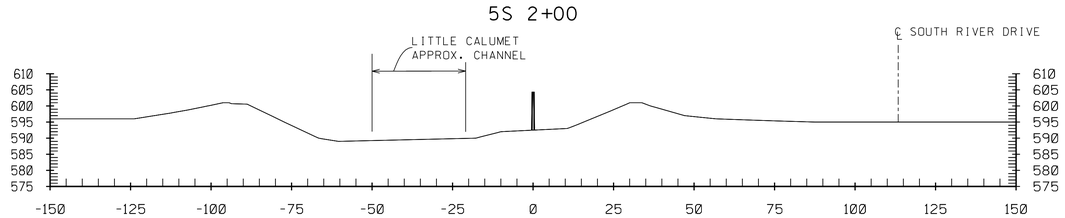

5S 1+00

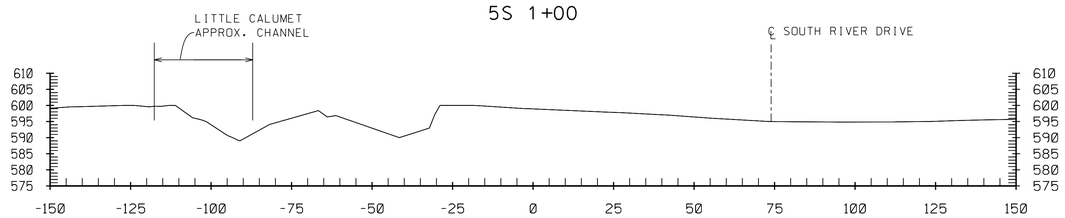

5S 0+00

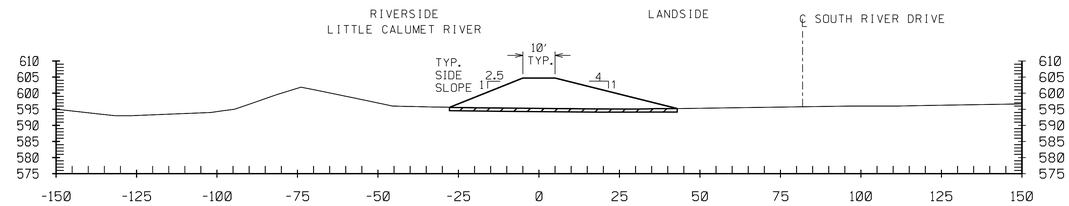

5S 11+00

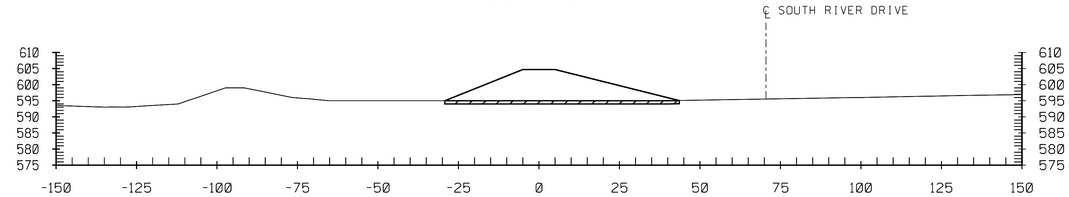

5S 10+00

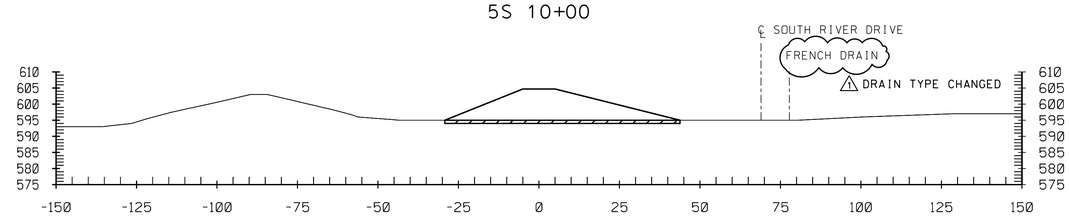

5S 9+00

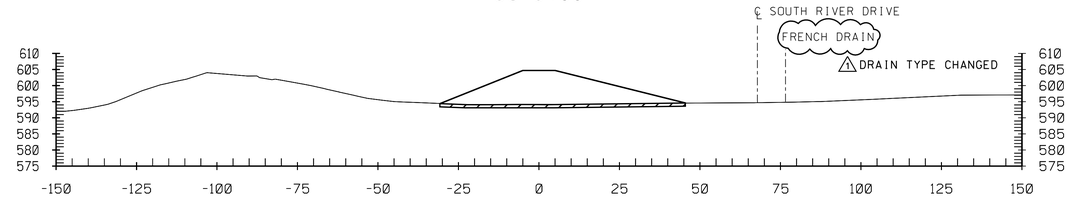

5S 8+00

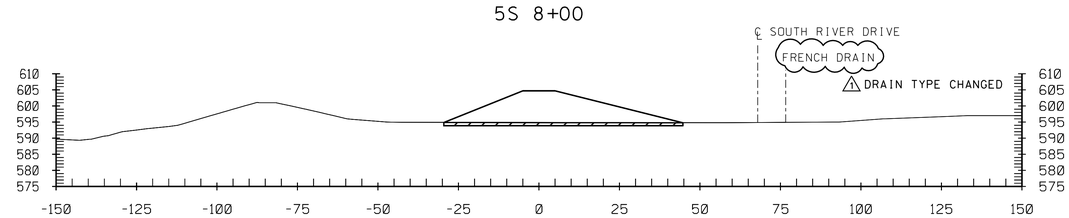

5S 7+00

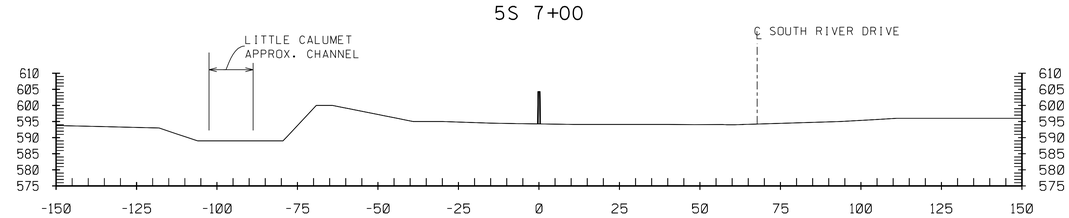

5S 6+00

NOTES:

1. FOR CONTROL POINTS AND WORKLIMITS SEE SHEET C-01.
2. FOR PLAN AND PROFILE SEE SHEET C-11.
3. FOR TYPICAL LEVEE AND DITCH SECTIONS SEE C-42
4. HYDROGRAPHIC SURVEY NOT TAKEN AT WATERWAYS. WATER SURFACE IS SHOWN AT TIME OF SURVEY.
5. APPROXIMATE LOCATIONS OF PLANAMETRICS ARE PROVIDED IN EACH SECTION. ALL FEATURES TO BE VERIFIED IN THE FIELD.

ONE FOOT STRIPPING

20' 10' 0 20'

SCALE: 1'' = 20'-0"

US Army Corps of Engineers
Chicago District

SYMBOL	AMENDMENT DESCRIPTION	DATE APPROVED	SYMBOL	DESCRIPTION	DATE APPROVED
1	CHANGES IDENTIFIED NEXT TO BUBBLE				

DESIGNED BY: JAG
DATE: AUG 2007
DRAWN BY: DB
SCALE: AS SHOWN
CHECKED BY: WK
SOLICITATION NUMBER: W912P6-07-B-0006
SUBMITTED BY: JOHN GROBOSKI
DATE:

U.S. ARMY ENGINEER DISTRICT
CORPS OF ENGINEERS
CHICAGO, ILLINOIS

LITTLE CALUMET RIVER, INDIANA
LOCAL FLOOD PROTECTION
STAGE V, PHASE 2 - LEVEE

CROSS SECTION
STA. 5S 0+00 to 5S 11+00

SHEET REFERENCE NUMBER:
C-26

PLOT DATE: 8/24/2007
FILENAME: D:\working\dms10534\LCS5C26AWD1.DGN

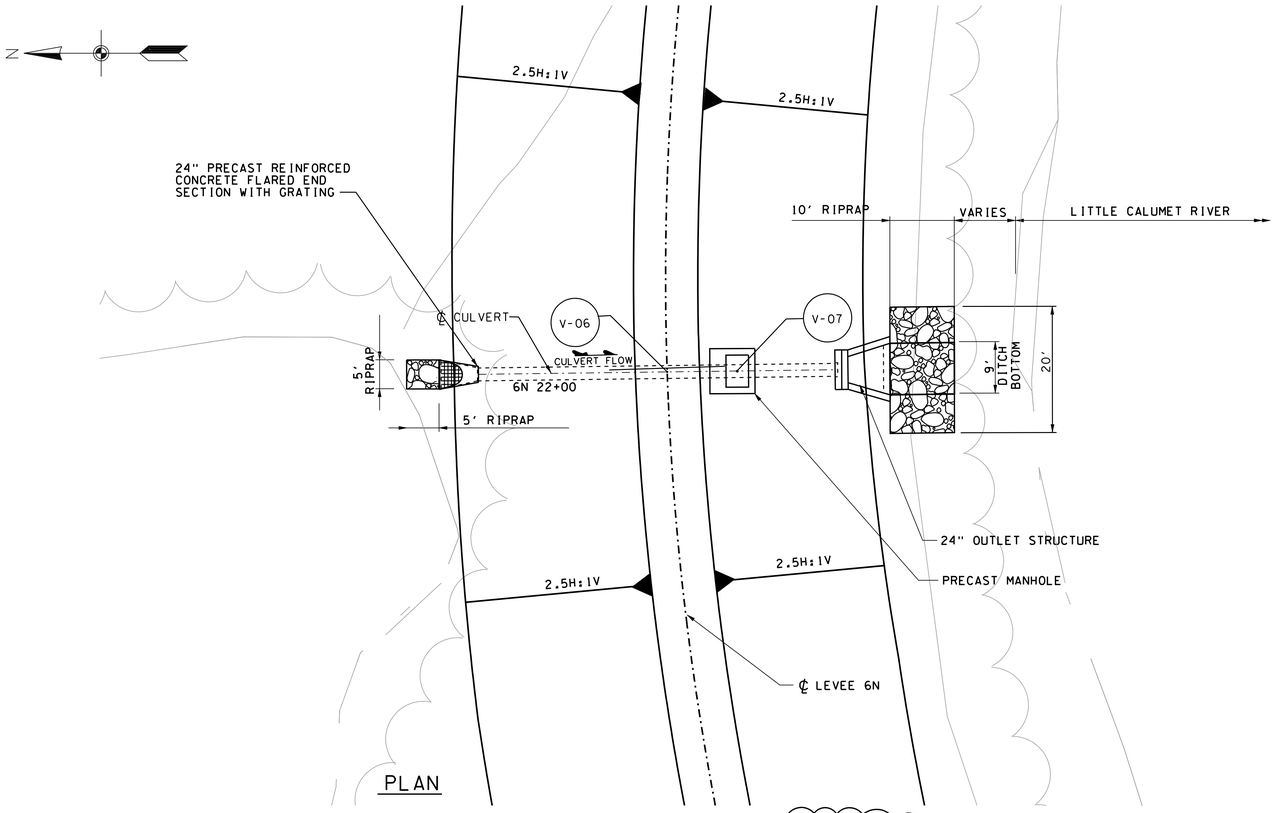

PLAN

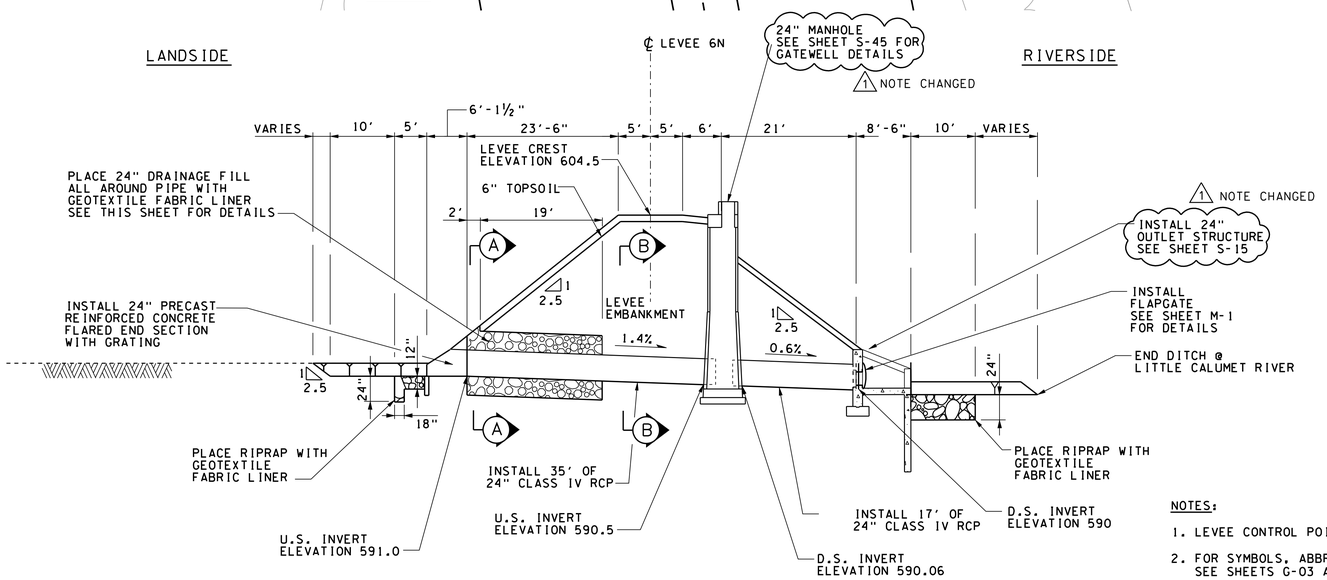

CROSS SECTION - LEVEE 6N
CULVERT 6-5C @ STA. 22+00

VERTICAL 5 0 5 10FT
SCALE: 1"= 5'

HORIZONTAL 10 5 0 10 20FT
SCALE: 1"= 10'

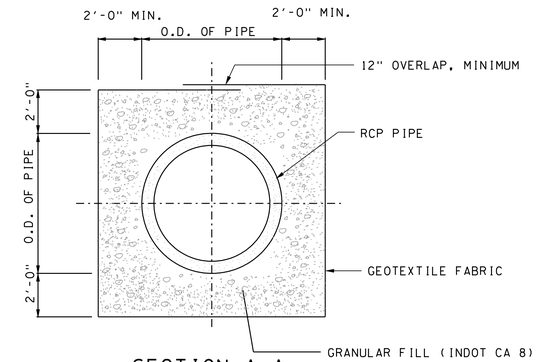

SECTION A-A
N.T.S.

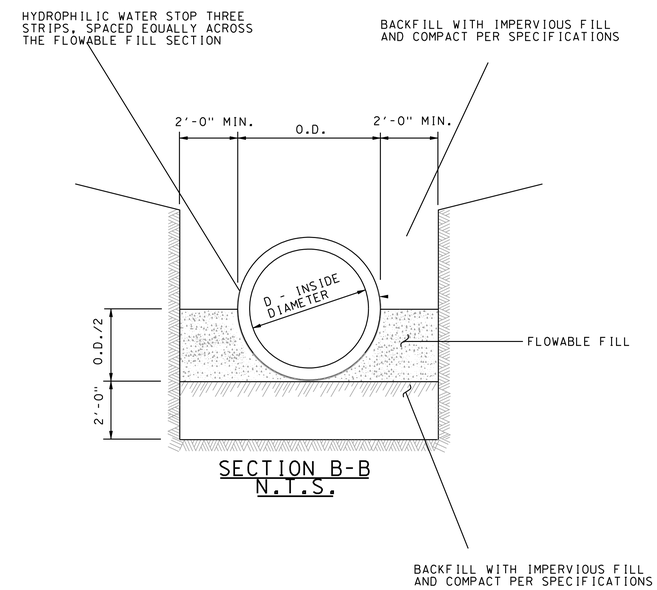

SECTION B-B
N.T.S.

DESCRIPTION	POINT #	NORTHING	EASTING
CL LEVEE AND CL CULVERT	V-06	1482846.33	394729.51
CL MANHOLE AND CL CULVERT	V-07	1482835.54	394728.12

NOTES:

1. LEVEE CONTROL POINTS ARE LISTED ON WORK LIMITS SHEET C-10.
2. FOR SYMBOLS, ABBREVIATIONS, & GENERAL NOTES SEE SHEETS G-03 AND G-04.
3. FOR LEVEE TYPICAL SECTIONS SEE SHEET C-42.
4. RIPRAP SHALL BE INDOT "REVETMENT" GRADEATION RIPRAP.
5. PIPE BEDDING AND BACKFILL SHALL BE IMPERVIOUS MATERIAL EXCEPT FOR DRAINAGE FILL AREA.
6. FOR LEVEE 6N PLAN AND PROFILE DETAILS SEE SHEET C-23.
7. FOR TRENCH SECTION DETAILS, SEE SHEET C-42.
8. SEE S-33 FOR GATEWELL.
9. SEE SHEET C-43 FOR PRE-LOAD REQUIREMENTS.

US Army Corps of Engineers
Chicago District

SYMBOL	AMENDMENT DESCRIPTION	DATE APPROVED	SYMBOL	DESCRIPTION	DATE APPROVED
CHANGES IDENTIFIED NEXT TO BUBBLE					

DESIGNED BY: JAG
DATE: AUG 2007
DRAWN BY: DB
SCALE: AS SHOWN
CHECKED BY: WK
SOLICITATION NUMBER: W912P6-07-B-0006
SUBMITTED BY: JOHN GROBOSKI
DATE:

U.S. ARMY ENGINEER DISTRICT
CORPS OF ENGINEERS
CHICAGO, ILLINOIS

LITTLE CALUMET RIVER, INDIANA
LOCAL FLOOD PROTECTION
STAGE V, PHASE 2 - LEVEE

CULVERT 6-5C DETAIL -
24" RCP - 6N

SHEET REFERENCE NUMBER:
C-46
SHEET 50 OF 138

PLOT DATE: 8/24/2007
FILENAME: D:\working\dms10534\C5SC46ANDIGN

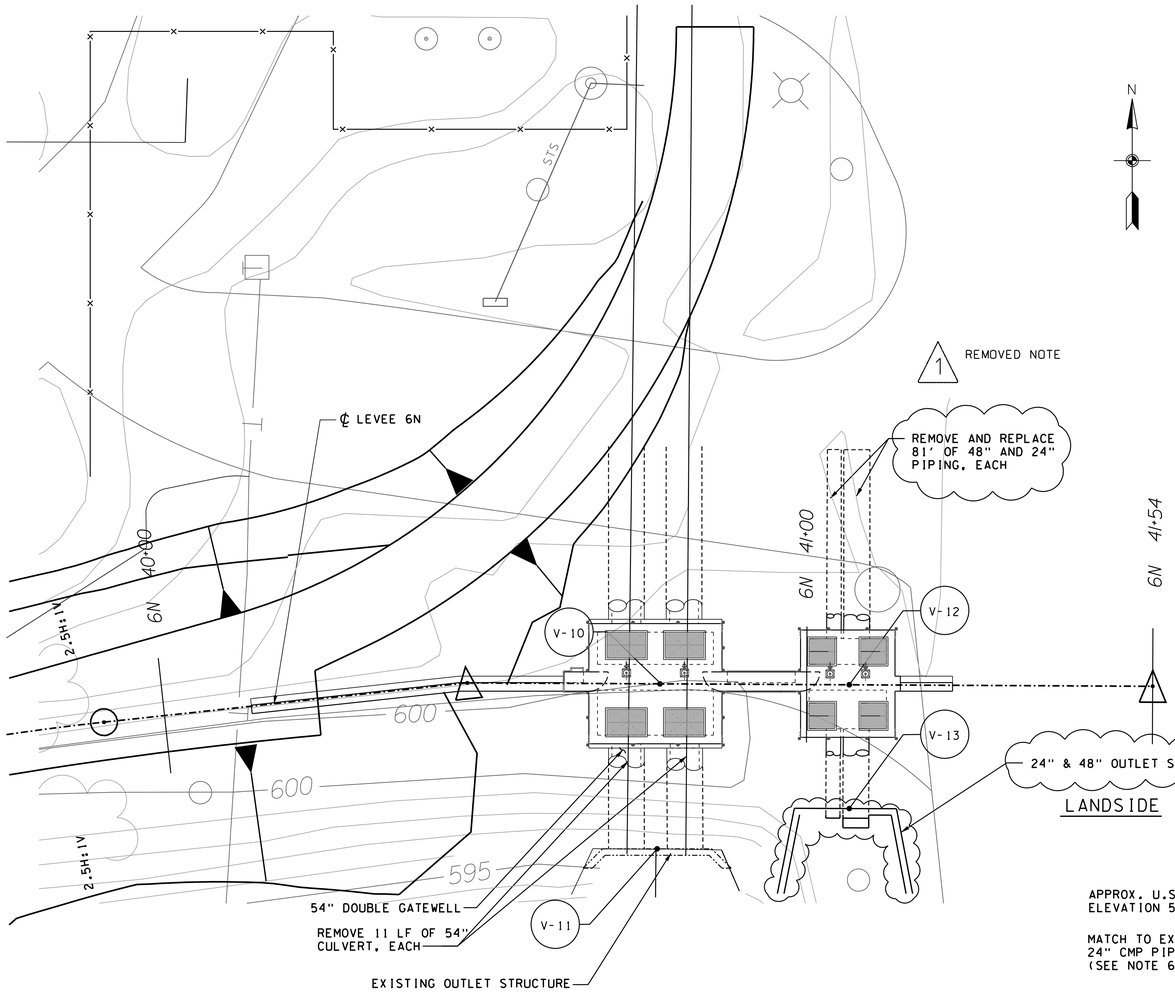

PLAN

1 REMOVED NOTE

1 REMOVED OUTLET STRUCTURE FROM SET

1 REMOVED OUTLET STRUCTURE FROM SET

1 REMOVED DETAILS - NO LONGER APPLICABLE WITH CURRENT DESIGN

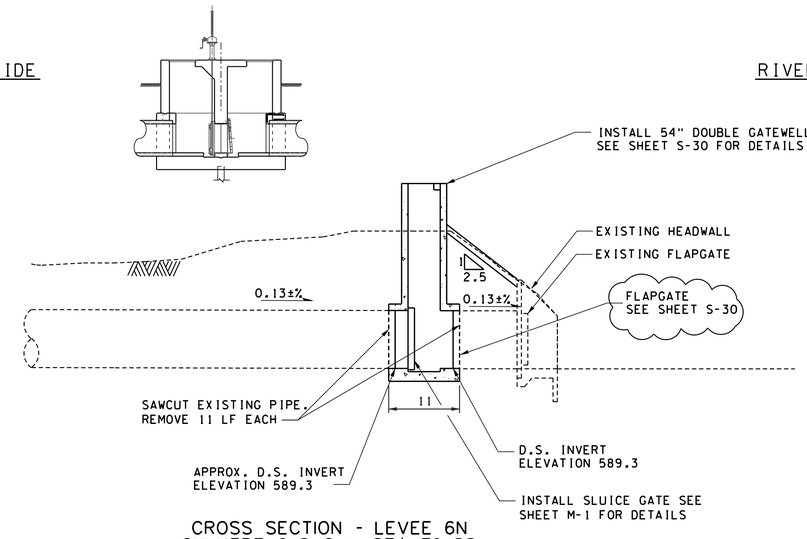

CROSS SECTION - LEVEE 6N
CULVERT 6-8 C @ STA. 39+88

VERTICAL 5 0 5 10FT SCALE: 1"= 5'

HORIZONTAL 10 5 0 10 20FT SCALE: 1"= 10'

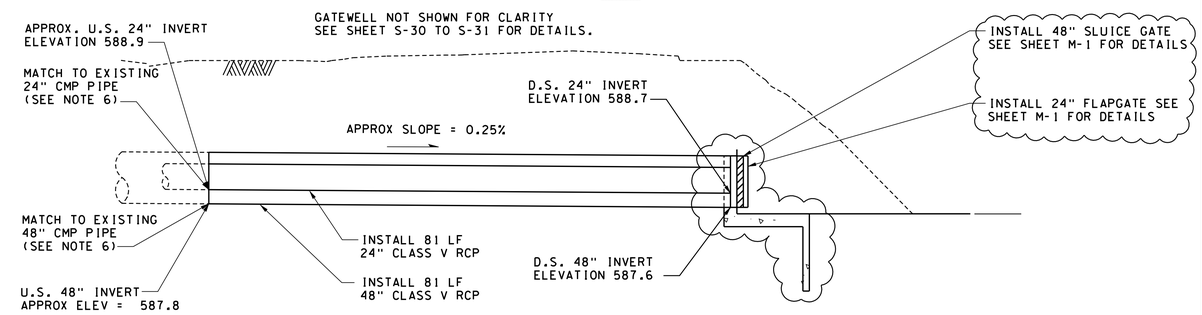

CROSS SECTION - LEVEE 6N
SOUTH KENNEDY AVE.
PUMPING STATION OUTFALL

VERTICAL 5 0 5 10FT SCALE: 1"= 5'

HORIZONTAL 10 5 0 10 20FT SCALE: 1"= 10'

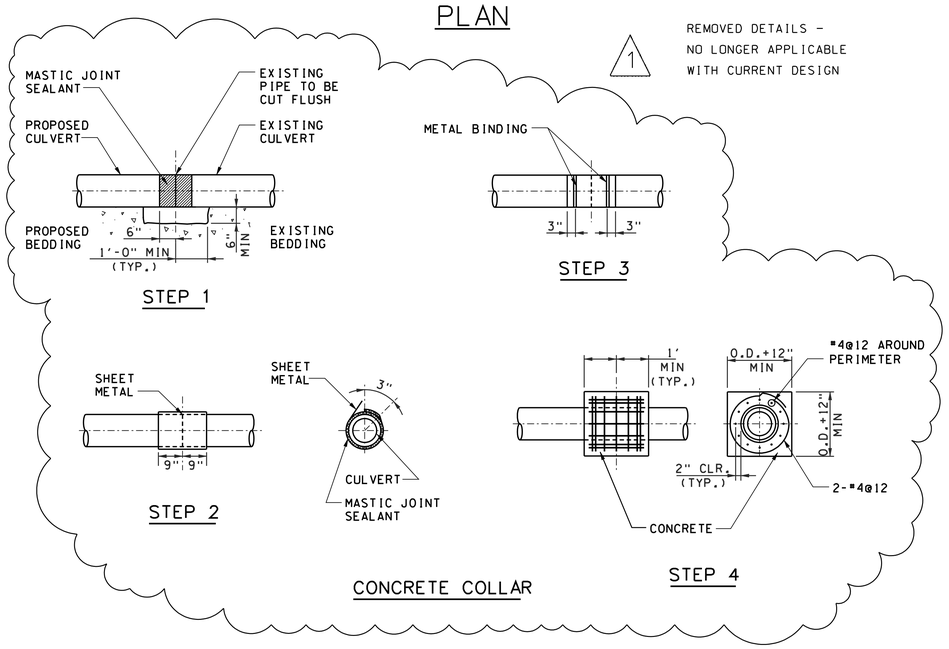

NOTES

1. LEVEE CONTROL POINTS ON WORK LIMITS SHEET C-10.
2. FOR SYMBOLS, ABBREVIATIONS, & GENERAL NOTES SEE SHEETS G-03 AND G-04.
3. FOR LEVEE TYPICAL SECTIONS SEE SHEET C-42.
4. RIPRAP SHALL BE INDOT "CLASS 2" GRADATION RIPRAP.
5. PIPE BEDDING AND BACKFILL SHALL BE IMPERVIOUS MATERIAL.
6. USE CONCRETE COLLARS TO MEET EXISTING PIPES AND CULVERTS, SEE DETAIL THIS SHEET.
7. FOR LEVEE 6N PLAN AND PROFILE DETAILS SEE SHEET C-25.
8. EXPOSE PIPE AT PROPOSED GATEWELL LOCATIONS TO VERIFY INVERTS, USE THESE INVERTS TO BUILD GATEWELLS SEE SHEETS S-30 TO S-31.
9. COORDINATES ARE PROVIDED AT EXPECTED LOCATION OF EXIST. FEATURES. EXIST. FEATURES SHALL BE FIELD VERIFIED.

1 ADDED NOTES

DESCRIPTION	POINT #	NORTHING	EASTING
CL LEVEE AND CL CULVERT	V-10	1482632.65	396416.85
CENTER OUTLET STUCTURE	V-11	1482607.04	396416.42
CL LEVEE AND CL PUMPSTATION	V-12	1482632.52	396446.25
CENTER OUTLET STUCTURE	V-13	1482613.29	396446.25

US Army Corps of Engineers Chicago District

SYMBOL	AMENDMENT DESCRIPTION	DATE APPROVED	SYMBOL	DESCRIPTION	DATE APPROVED
1	CHANGES INDENTIFIED NEXT TO BUBBLE				

DESIGNED BY: JAG
DATE: AUG 2007
DRAWN BY: DB
SCALE: AS SHOWN
CHECKED BY: WK
SOLICITATION NUMBER: W912P6-07-B-0006
SUBMITTED BY: JOHN GROBOSKI
DATE:

U.S. ARMY ENGINEER DISTRICT
CORPS OF ENGINEERS
CHICAGO, ILLINOIS

LITTLE CALUMET RIVER, INDIANA
LOCAL FLOOD PROTECTION
STAGE V, PHASE 2 - LEVEE
CULVERT 6-8C
AND SOUTH KENNEDY AVE.
PUMPING STATION OUTFALL DETAILS
- 6N

SHEET REFERENCE NUMBER:
C-48
SHEET 52 OF 138

PLOT DATE: 8/29/2007
FILENAME: D:\working\oms10534\LCS5C48A001.dgn

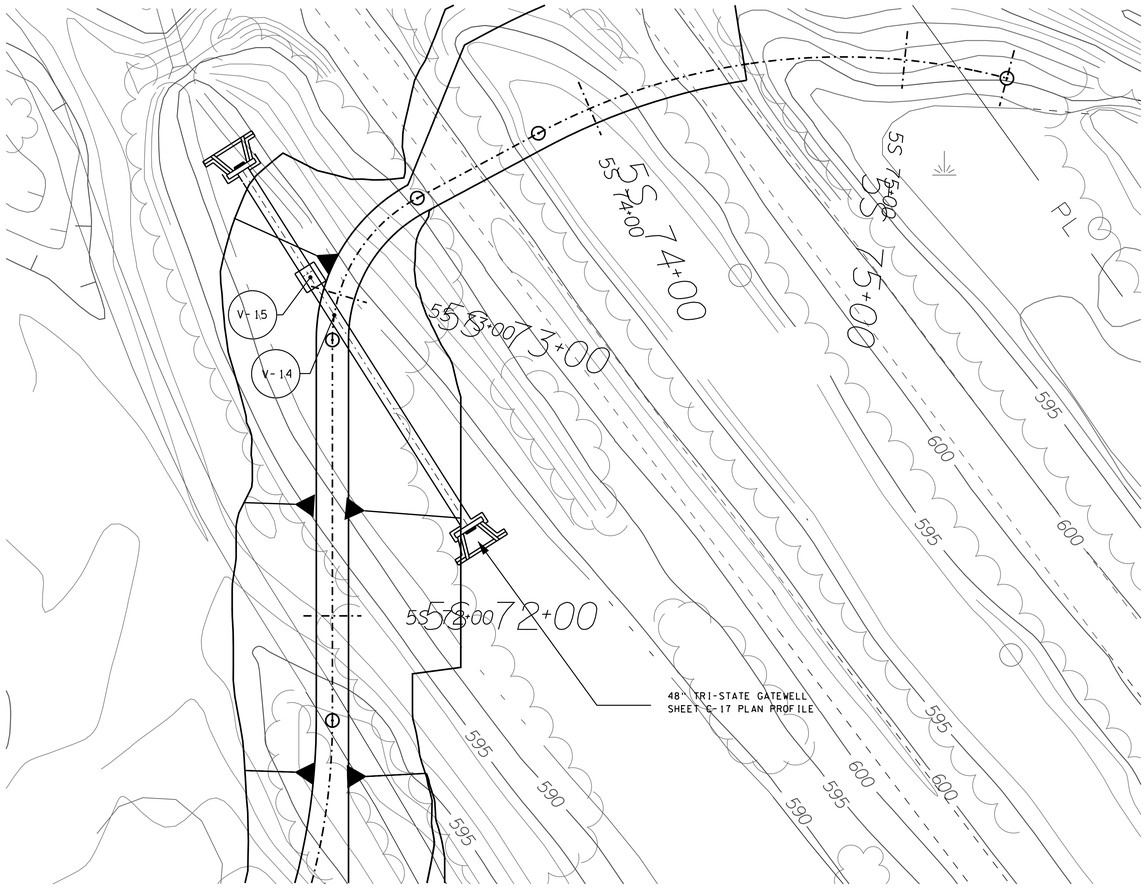

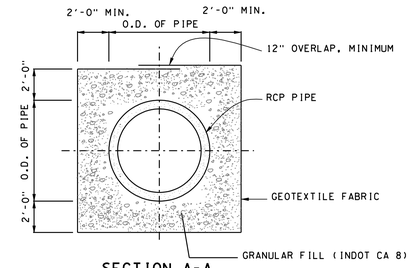

SECTION A-A
NTS

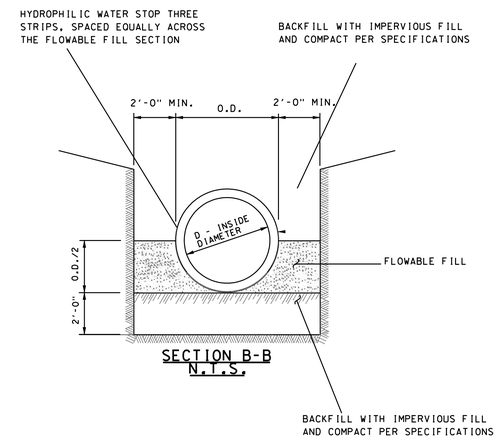

SECTION B-B
N.T.S.

DESCRIPTION	POINT #	NORTHING	EASTING
CL LEVEE AND CL GATEWELL	V-14	1481876.83	392586.11
CL GATEWELL AND CL CULVERT	V-15	1481888.58	392578.68

DETAIL 5S-73+00
GATEWELL PROFILE

20 10 0 20 40FT
SCALE: 1''= 20'

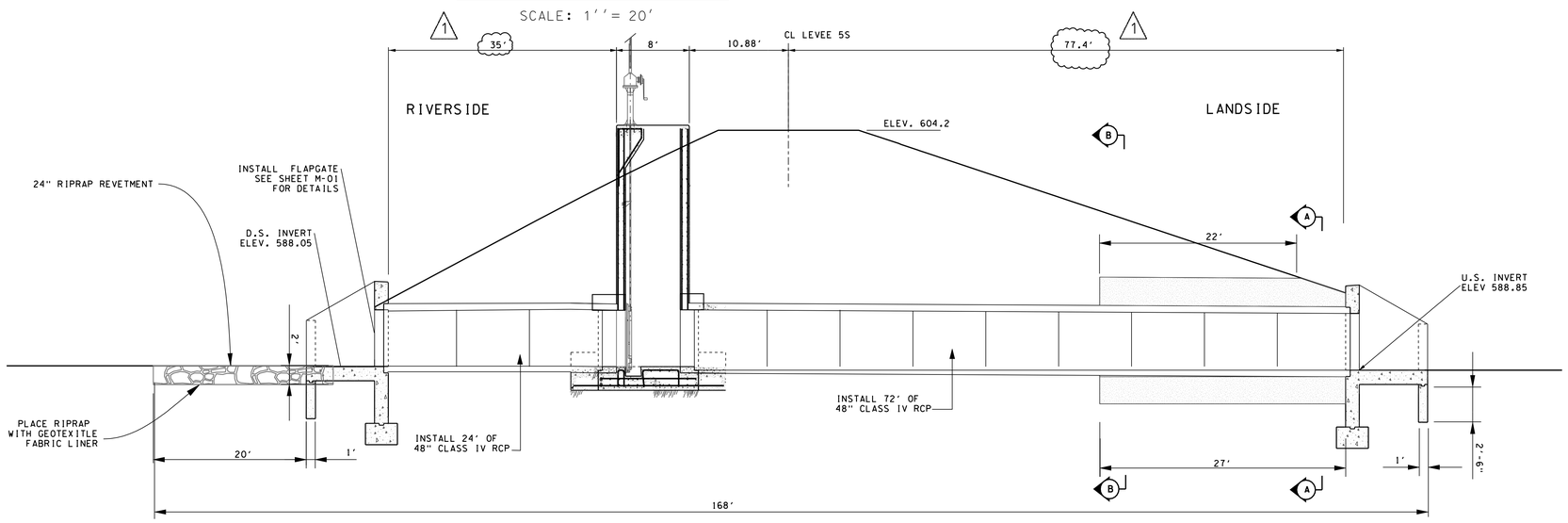

PROFILE 5S - 73+00
TRI STATE 48" GATEWELL
1 HORIZONTAL TO 1 VERTICAL

10 5 0 10 20FT
SCALE IN FEET

NOTES:

1. LEVEE AND DITCH CONTROL POINTS ARE LISTED ON WORK LIMITS SHEET C-17.
2. FOR SYMBOLS, ABBREVIATIONS, & GENERAL NOTES SEE SHEETS G-03 AND G-04.
3. FOR LEVEE AND DITCH TYPICAL SECTIONS SEE SHEET C-42.
4. RIPRAP SHALL BE RIPRAP REVETMENT SEE THIS SHEET.
5. PIPE BEDDING AND BACKFILL SHALL BE IMPERVIOUS MATERIAL EXCEPT FOR DRAINAGE FILL AREA.
6. FOR LEVEE 5N PLAN AND PROFILE DETAILS SEE SHEETS C-17 & C-19.
7. FOR TRENCH SECTION DETAILS, SEE SHEET C-42.
8. FOR PRE-LOAD SEE C-43.
9. REFERENCE S-16 FOR GATEWELL AND S-17 FOR HEADWALL.
10. WIDTH OF RIP-RAP OUTLET IS 11 FT.

US Army Corps of Engineers
Chicago District

SYMBOL	AMENDMENT DESCRIPTION	DATE APPROVED	SYMBOL	DESCRIPTION	DATE APPROVED
1	DIMENSION REMOVED				

DESIGNED BY: JAG
DATE: AUG 2007
DRAWN BY: DB
SCALE: AS SHOWN
CHECKED BY: WK
SOLICITATION NUMBER: W912P6-07-B-0006
SUBMITTED BY: JOHN GROBOSKI
DATE:

U.S. ARMY ENGINEER DISTRICT
CORPS OF ENGINEERS
CHICAGO, ILLINOIS

LITTLE CALUMET RIVER, INDIANA
LOCAL FLOOD PROTECTION
STAGE V, PHASE 2 - LEVEE

5N TRISTATE
GATEWELL PROFILE
5S-73+00

SHEET REFERENCE NUMBER:
C-49
SHEET 53 OF 138

PLOT DATE: $DATE$
FILENAME: $FILENAME$

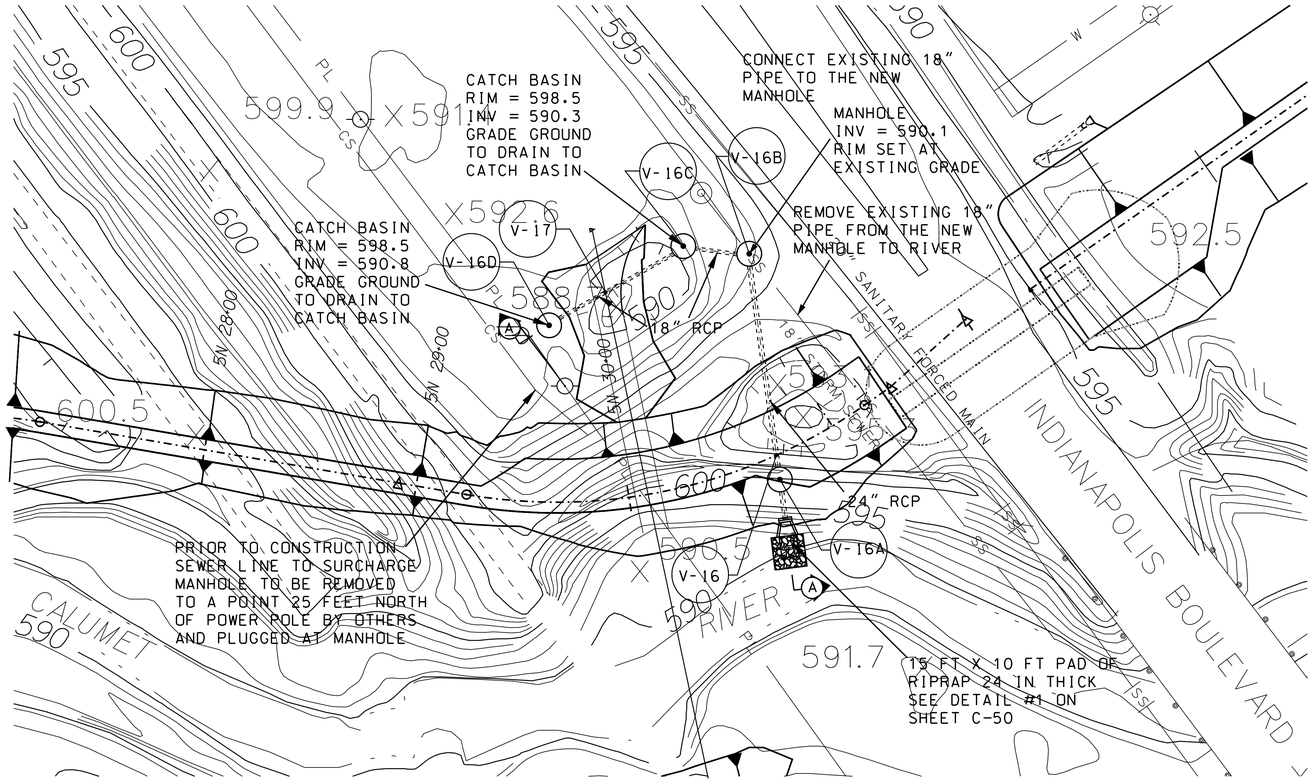

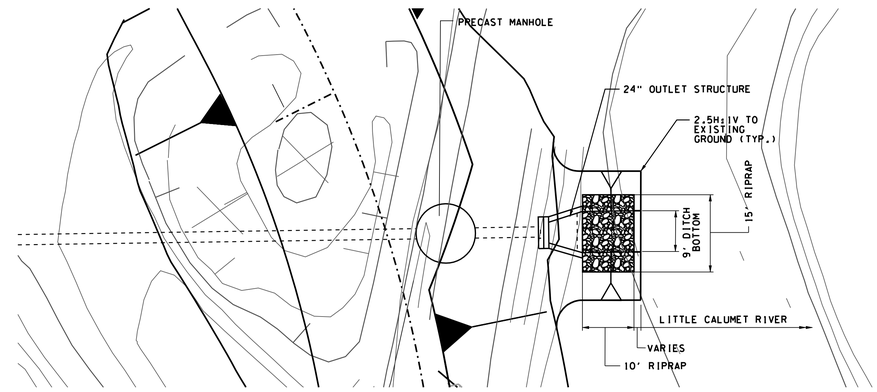

DETAIL #1
N.T.S

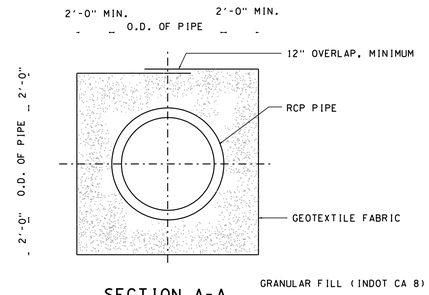

SECTION A-A
N.T.S.

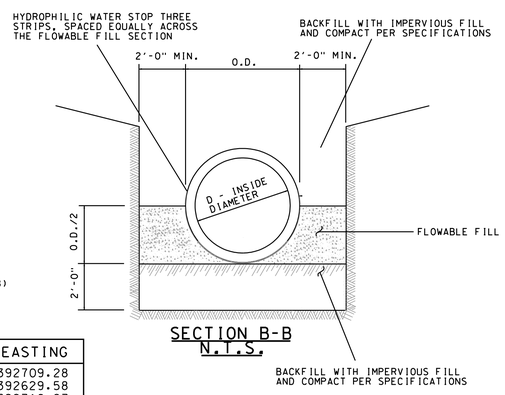

SECTION B-B
N.T.S.

DESCRIPTION	POINT #	NORTHING	EASTING
CL LEVEE AND CL CULVERT	V-16	1482156.11	392709.28
CL CULVERT AND CL 5N-E RAMP	V-17	1482231.91	392629.58
CL CULVERT AND CL MANHOLE	V-16A	1482144.73	392710.87
CL CULVERT AND CL MANHOLE	V-16B	1482249.89	392696.62
CL CULVERT AND CL MANHOLE	V-16C	1482253.47	392665.89
CL CULVERT AND CL MANHOLE	V-16D	1482216.56	392603.39

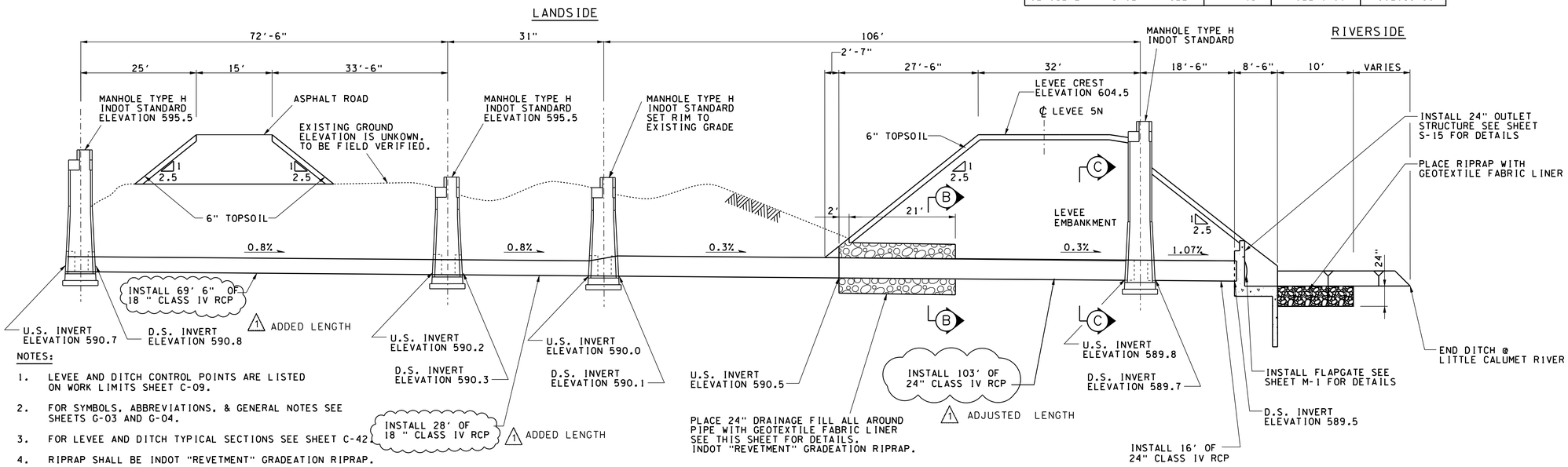

NOTES:

1. LEVEE AND DITCH CONTROL POINTS ARE LISTED ON WORK LIMITS SHEET C-09.
2. FOR SYMBOLS, ABBREVIATIONS, & GENERAL NOTES SEE SHEETS G-03 AND G-04.
3. FOR LEVEE AND DITCH TYPICAL SECTIONS SEE SHEET C-42.
4. RIPRAP SHALL BE INDOT "REVETMENT" GRADEATION RIPRAP.
5. PIPE BEDDING AND BACKFILL SHALL BE IMPERVIOUS MATERIAL EXCEPT FOR DRAINAGE FILL AREA.
6. FOR LEVEE 5N PLAN AND PROFILE DETAILS SEE SHEET C-21.
7. FOR TRENCH SECTION DETAILS, SEE SHEET C-42.
8. THE MANHOLE INDENTIFIED AT V-16B MUST TIE INTO EXIST. 18" PIPE. LOCATION PROVIDED BASED ON BEST AVAILABLE INFORMATION. ACTUAL LOCATION MAY VARY.
9. FIELD ADJUSTMENTS FOR THE MANHOLES INDENTIFIED AT V-16D AND V-16C ARE ACCEPTABLE.

ADDED NOTES

CROSS SECTION A-A - LEVEE 5N
MANHOLES AND DITCH
FROM STA. 5N 29+56 TO STA. 5N 30+87

VERTICAL 5 0 5 10FT
SCALE: 1" = 5'

HORIZONTAL 7'-6" 0 7'-6" 15FT
SCALE: 1" = 7'-6"

N

30 15 0 30 60
1 INCH = 30 FEET

US Army Corps of Engineers
Chicago District

SYMBOL	AMENDMENT DESCRIPTION	DATE APPROVED	SYMBOL	DESCRIPTION	DATE APPROVED

DESIGNED BY: JAG
DATE: AUG 2007
DRAWN BY: DB
SCALE: AS SHOWN
CHECKED BY: WK
SOLICITATION NUMBER: W912P6-07-B-0006
SUBMITTED BY: JOHN GROBOSKI
DATE:

U.S. ARMY ENGINEER DISTRICT
CORPS OF ENGINEERS
CHICAGO, ILLINOIS

LITTLE CALUMET RIVER, INDIANA
LOCAL FLOOD PROTECTION
STAGE V, PHASE 2 - LEVEE

CULVERT 5-7C DETAILS
- 24" AND 18" RCP - 5N

SHEET REFERENCE NUMBER:
C-50
SHEET 54 OF 138

PLOT DATE: $DATE$
FILENAME: $FILENAME$

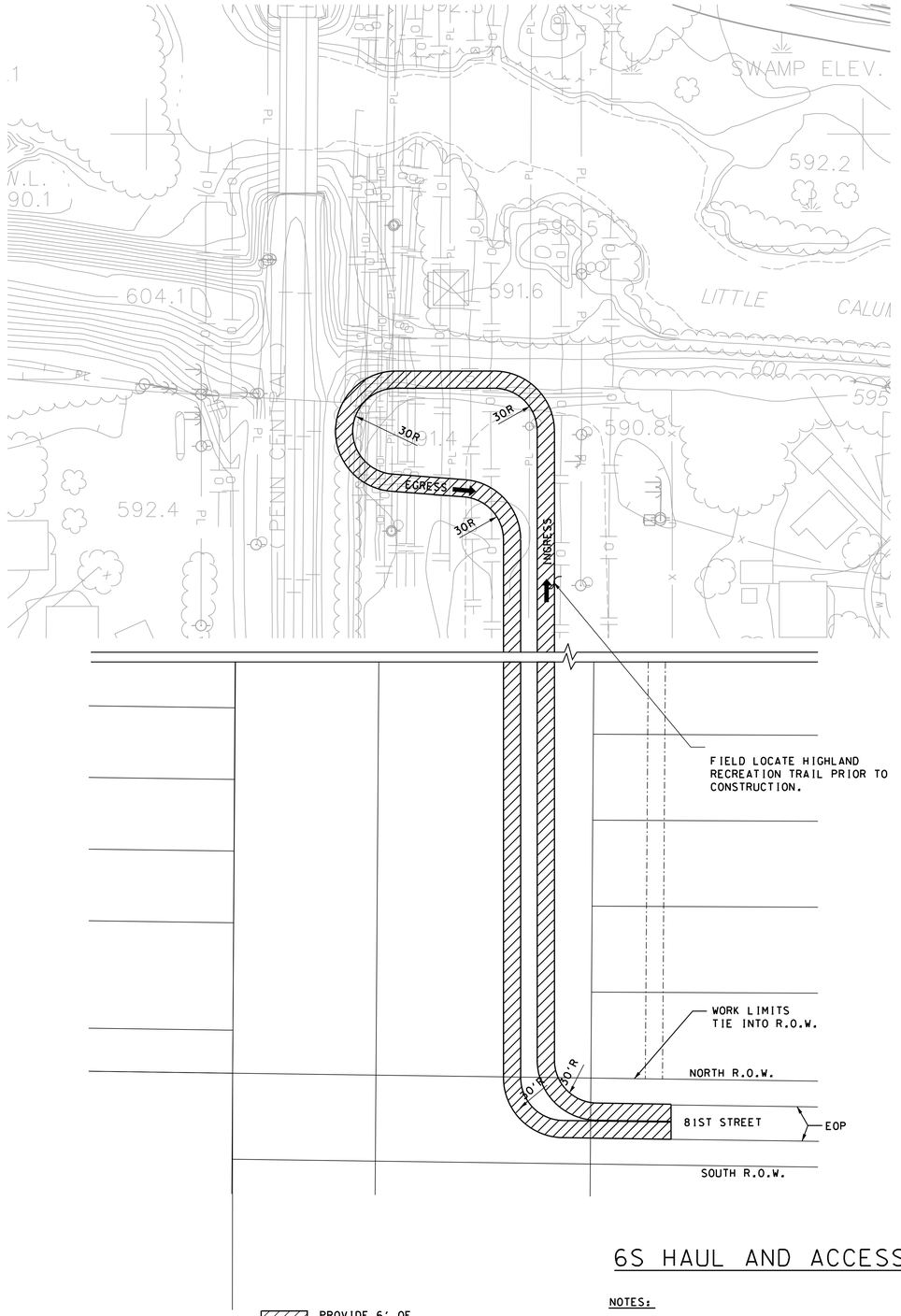

6S HAUL AND ACCESS ROUTE

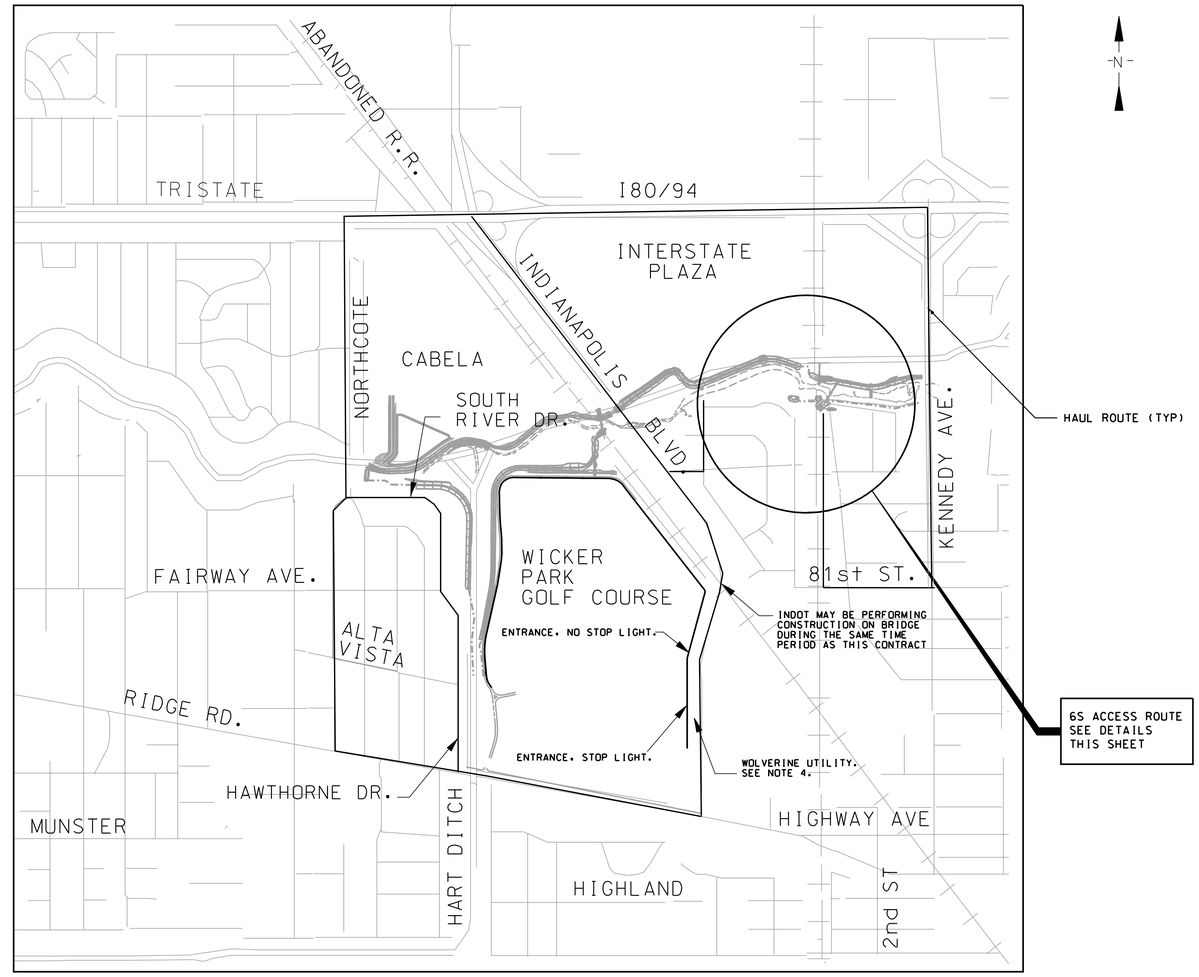

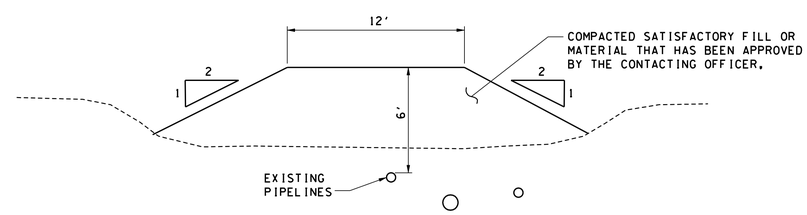

6S TYPICAL ROAD TEMPLATE

NOT TO SCALE

NOTES:

1. CONTRACTOR SHALL OBTAIN PERMITS FROM EACH MUNICIPALITY RECEIVING CONSTRUCTION TRAFFIC AND COORDINATE WITH INDOT FOR USE OF ALL STATE ROUTES. THERE MAY BE CONSTRUCTION ON IND BLVD DURING THIS CONTRACT.

2. CONTRACTOR SHALL PROVIDE A MINIMUM OF 6' OF COVER OVER UTILITIES WHEN CONSTRUCTION TRAFFIC IS PRESENT.

1 3. CONTRACTOR SHALL REMOVE ALL FILL MATERIAL PLACED OVER UTILITIES AND RESTORE HIGHLAND RECREATION TRAIL AND NIPSCO ROW TO PRECONSTRUCTION CONDITIONS. JOB EXCAVATED MATERIAL MAY BE ALLOWED FOR USE AS FILL WITH APPROVAL OF THE CONTRACTING OFFICER.

4. CONTRACTOR SHALL COORDINATE WITH DENNIS SIMALA FROM NORTH TOWNSHIP, SEE SHEET G-04 FOR CONTRACT INFORMATION, FOR ACCESS TO THE LEVEE ° I-WALL CONSTRUCTION OF ALIGNMENT 5S EAST OF HARTS DITCH. CONTRACTOR SHALL INSTALL TEMPORARY CONSTRUCTION FENCING ALONG THE WOLVERINE PIPELINE.

5. NORTHCOTE MAY NOT BE ACCESSIBLE AS A HAUL ROUTE. CONTRACTOR SHALL COORDINATE WITH THE CITY OF HAMMOND.

6. IT THE OPTION FOR THE WORK WITHIN THE UTILITY COORIDOR IS NOT EXERCISED. THE CONTRACTOR SHALL ACCESS 6S, DIRECTLY OFF OF KENNEDY AVE. CONTRACTOR SHALL COORDINATE WITH THE CITY OF HAMMOND.

US Army Corps of Engineers
Chicago District

SYMBOL	AMENDMENT DESCRIPTION	DATE APPROVED	SYMBOL	DESCRIPTION	DATE APPROVED
1	CHANGED NOTE 3				

DESIGNED BY: JAG
DATE: AUG 2007
DRAWN BY: DB
SCALE: AS SHOWN
CHECKED BY: WK
SOLICITATION NUMBER: W912P6-07-B-0006
SUBMITTED BY: JOHN GROBOSKI
DATE:

U.S. ARMY ENGINEER DISTRICT
CORPS OF ENGINEERS
CHICAGO, ILLINOIS

LITTLE CALUMET RIVER, INDIANA
LOCAL FLOOD PROTECTION
STAGE V, PHASE 2 - LEVEE

HAUL ROUTE AND CONSTRUCTION ACCESSSHEET

SHEET REFERENCE NUMBER:
C-53
SHEET 57 OF 138

PLOT DATE: 8/28/2007
FILENAME: D:\working\dms\053A\LCS5C53AW01.dgn

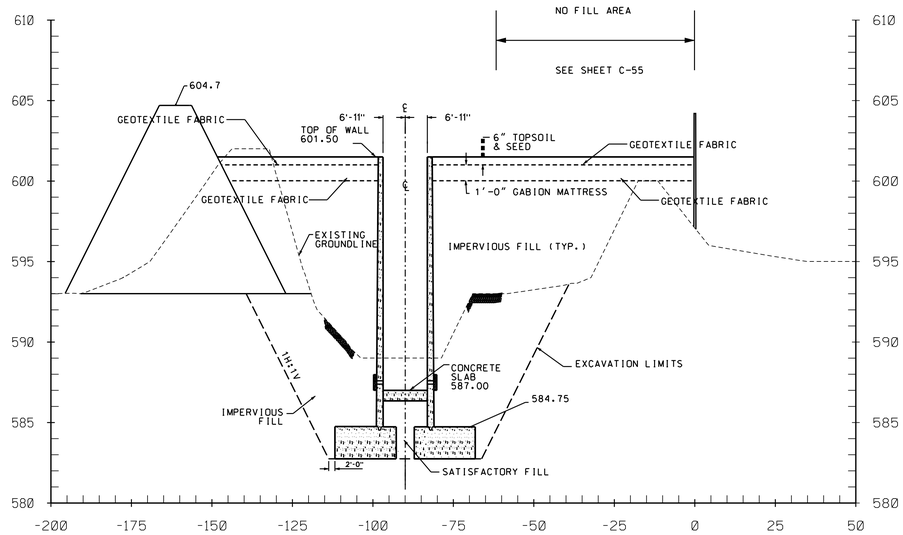

5S 3+70
APPROX STA 5N 3+44.95

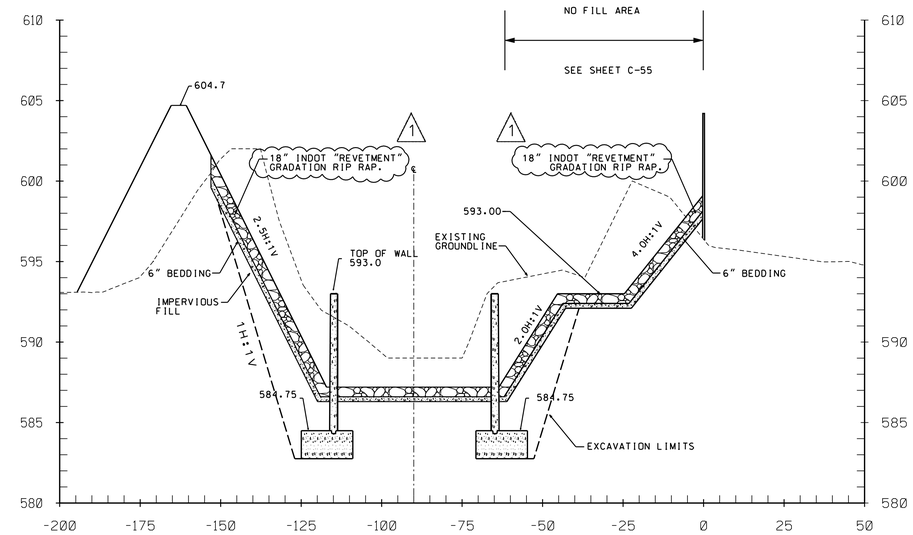

5S 3+96

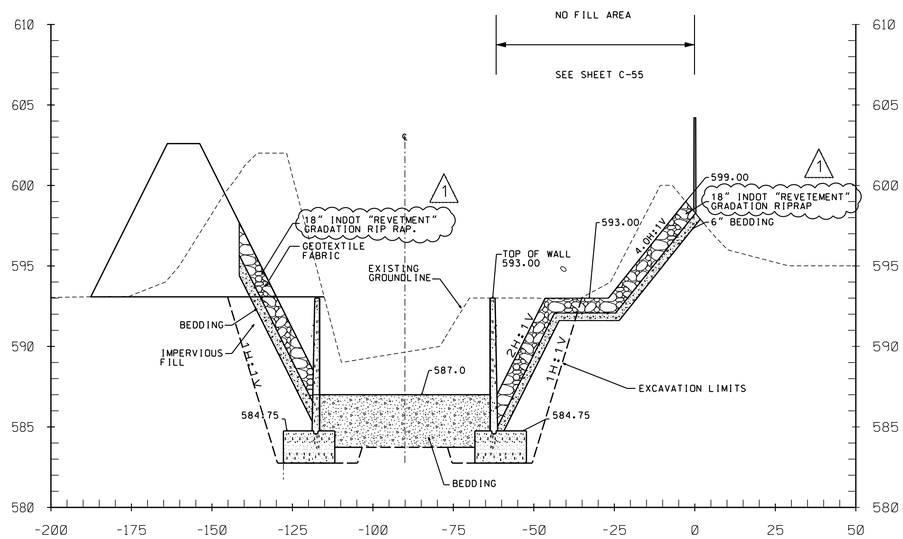

5S 3+45

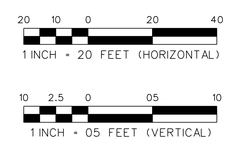

NOTES:

1) CROSS SECTIONS TAKEN ALONG ALIGNMENT CHAIN 5S. SEE SHEET C-56.

1 2) FOR RIP RAP PLACEMENT AND THICKNESS, SEE SECTION "RIP-RAP FOR EROSION CONTROL" AND "WIRE MESH GABION MATTRESSES" IN THE SPECIFICATIONS.

US Army Corps of Engineers
Chicago District

SYMBOL	AMENDMENT DESCRIPTION	DATE APPROVED	SYMBOL	DESCRIPTION	DATE APPROVED
1	CHANGED RIPRAP DEPTH AND NOTE 2.				

DESIGNED BY: JAG
DATE: AUG 2007
DRAWN BY: DB
SCALE: AS SHOWN
CHECKED BY: WK
SOLICITATION NUMBER: W912P6-07-B-0006
JOHN GROBOSKI
SUBMITTED BY:
DATE:

U.S. ARMY ENGINEER DISTRICT
CORPS OF ENGINEERS
CHICAGO, ILLINOIS

LITTLE CALUMET RIVER, INDIANA
LOCAL FLOOD PROTECTION
STAGE V, PHASE 2 - LEVEE

HART DITCH
CONTROL STRUCTURE
CROSS SECTION

SHEET REFERENCE NUMBER:
C-54
SHEET 58 OF 138

PLOT DATE: 8/27/2007
FILENAME: D:\working\dms10534\CS5C54AMD1DGN.dgn

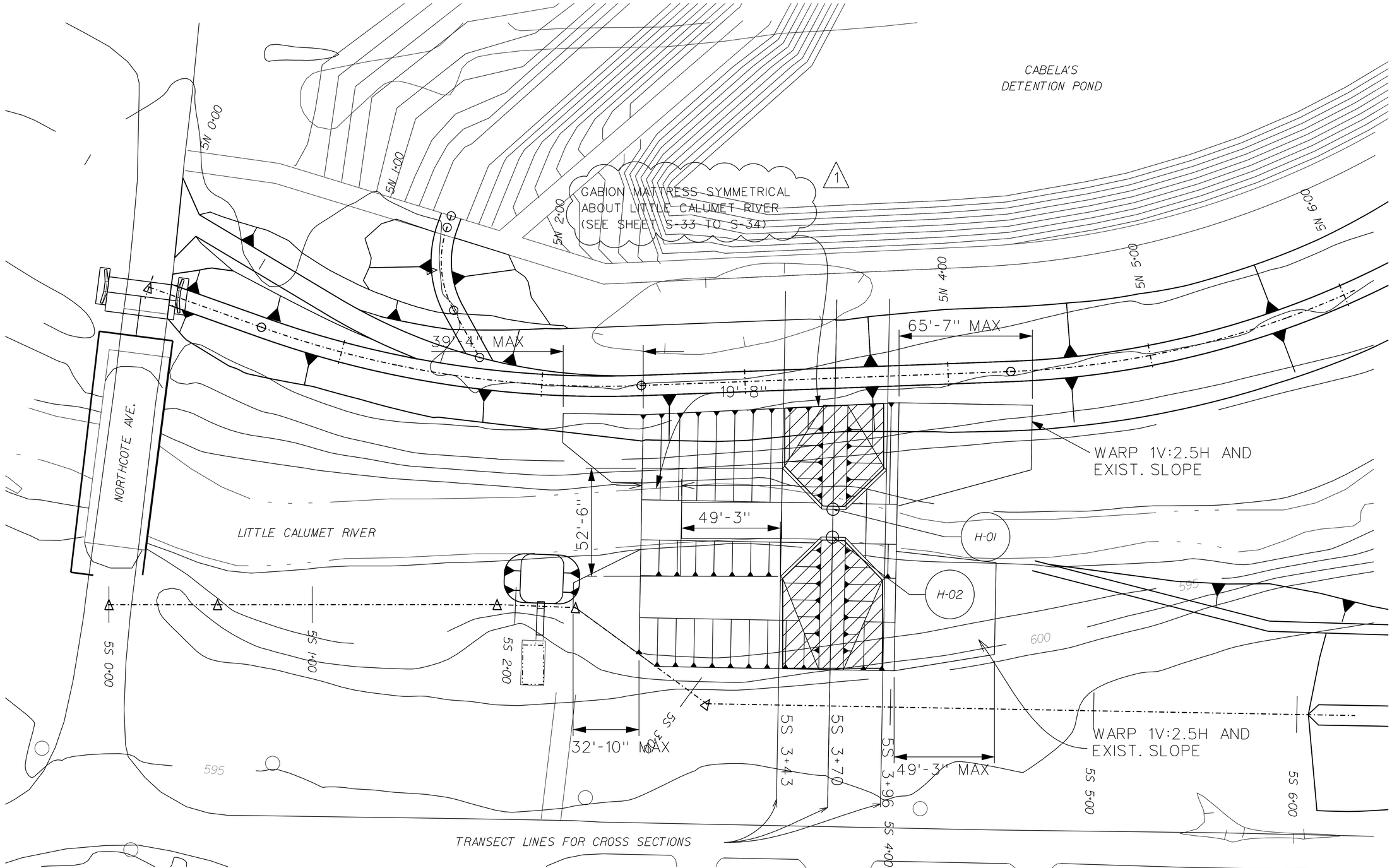

STRUCTURE	STATION	POINT TAKEN AT INTERSECTION		POINT #	NORTHING	EASTING
		FIRST LINE	SECOND LINE			
HARTS DITCH NORTH WING WALL	5S 39+85.56	TRANSECT AT 5S 39+85.56	NORTH - INSIDE FACE OF WINGWALL	H-01	1,481,446.63	390,215.62
HARTS DITCH SOUTH WING WALL	5S 39+85.56	TRANSECT AT 5S 39+85.56	SOUTH - INSIDE FACE OF WINGWALL	H-02	1,481,432.86	390,215.37

NOTES:

1. ALL FEATURES FOR THE HARTS DITCH CONTROL STRUCTURE ARE BASED ON THE H-01 AND H-02. DETAILS ARE PROVIDED ON SHEETS S-33 TO S-35.

1

N

20 10 0 20 40
1 INCH = 20 FEET

US Army Corps of Engineers
Chicago District

SYMBOL	AMENDMENT DESCRIPTION	DATE APPROVED	SYMBOL	DESCRIPTION	DATE APPROVED
1	CHANGED SHEET REFERENCES				

DESIGNED BY: JAG
DATE: AUG 2007
DRAWN BY: DB
SCALE: AS SHOWN
CHECKED BY: WK
SOLICITATION NUMBER: W912P6-07-B-0006
SUBMITTED BY: JOHN GROBOSKI
DATE:

U.S. ARMY ENGINEER DISTRICT
CORPS OF ENGINEERS
CHICAGO, ILLINOIS

LITTLE CALUMET RIVER, INDIANA
LOCAL FLOOD PROTECTION
STAGE V, PHASE 2 - LEVEE

HART DITCH CONTROL STRUCTURE
SITE PLAN

SHEET REFERENCE NUMBER:
C-56
SHEET 60 OF 138

PLOT DATE: $DATE$
FILENAME: $FILENAME$

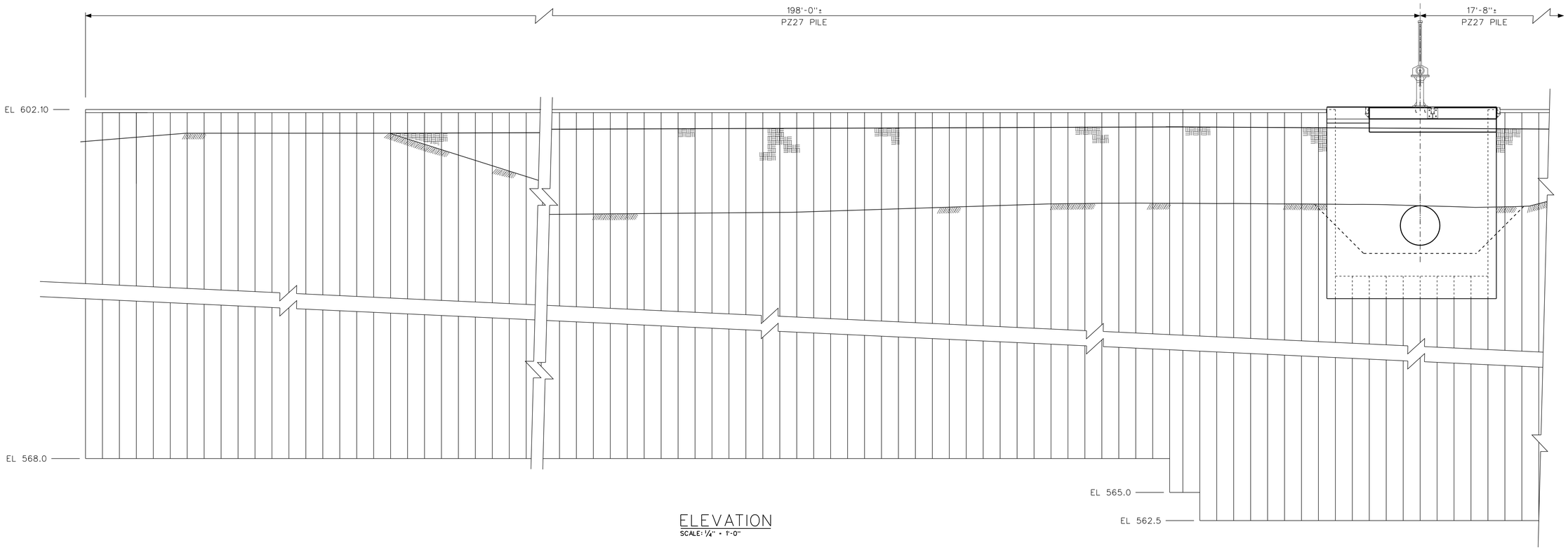

ELEVATION
SCALE: 1/4" = 1'-0"

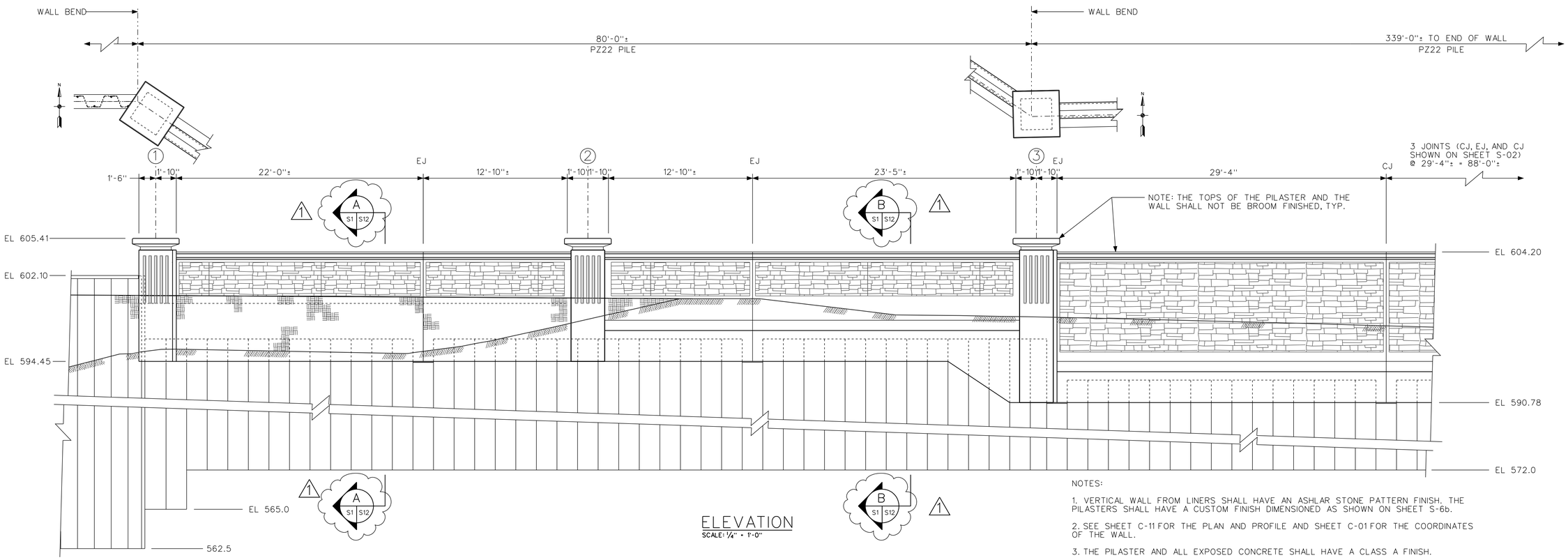

ELEVATION
SCALE: 1/4" = 1'-0"

NOTES:

1. VERTICAL WALL FROM LINERS SHALL HAVE AN ASHLAR STONE PATTERN FINISH. THE PILASTERS SHALL HAVE A CUSTOM FINISH DIMENSIONED AS SHOWN ON SHEET S-6b.

2. SEE SHEET C-11 FOR THE PLAN AND PROFILE AND SHEET C-01 FOR THE COORDINATES OF THE WALL.

3. THE PILASTER AND ALL EXPOSED CONCRETE SHALL HAVE A CLASS A FINISH.

US Army Corps of Engineers
Chicago District

SYMBOL	SHEET REFERENCES CORRECTIONS AMENDMENT DESCRIPTION	DATE APPROVED	SYMBOL	DESCRIPTION	DATE APPROVED

DESIGNED BY: EGS
DATE: AUGUST 2007
DRAWN BY: EGS
SCALE: AS SHOWN
CHECKED BY: JJS
SOLICITATION NUMBER: W912P6-07-B-0006
SUBMITTED BY: STEVE TREHARNE
DATE:

U.S. ARMY ENGINEER DISTRICT
CORPS OF ENGINEERS
CHICAGO, ILLINOIS

LITTLE CALUMET RIVER, INDIANA
LOCAL FLOOD PROTECTION
STAGE V, PHASE 2

BARING PUMP STATION I-WALL
ELEVATIONS

SHEET REFERENCE NUMBER:
S-01
SHEET 77 OF 138

PLOT DATE: 8/24/2007
FILENAME: D:\workcp\sm25162\LRC52-S01A001.dgn

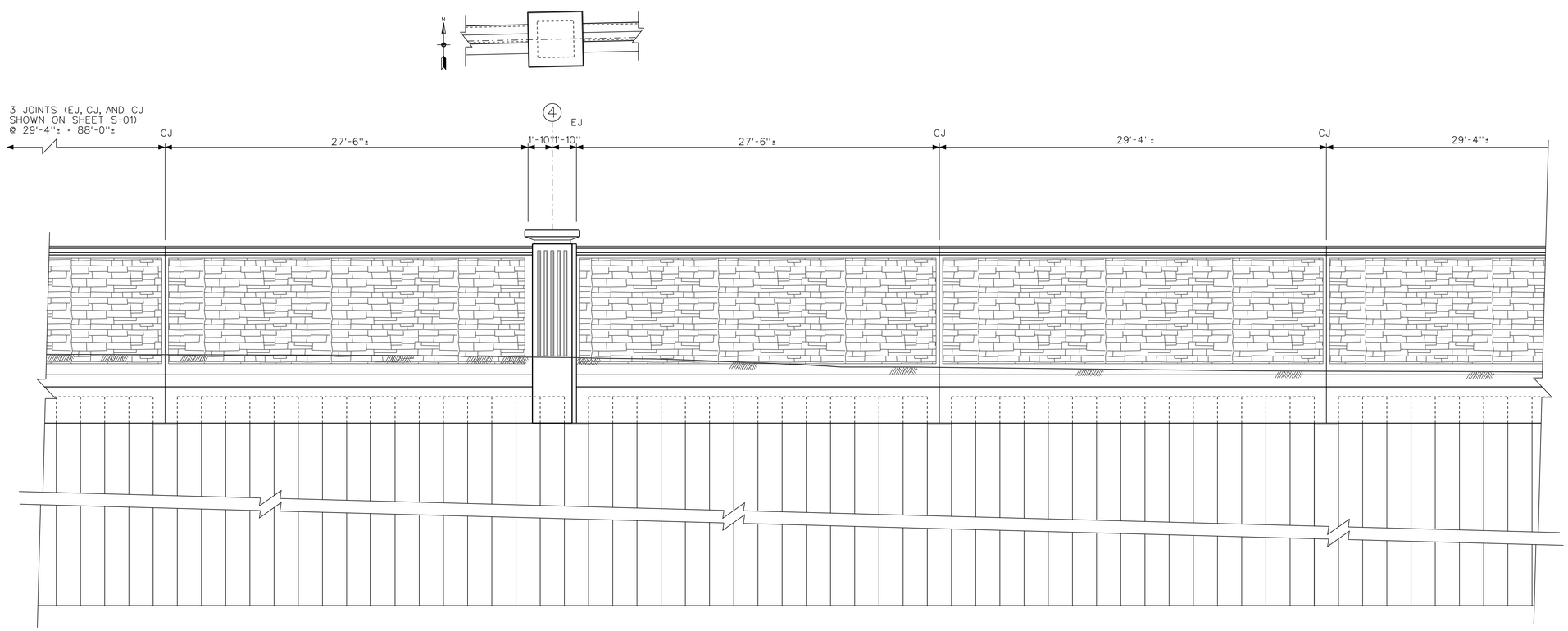

ELEVATION
SCALE: 1/4" = 1'-0"

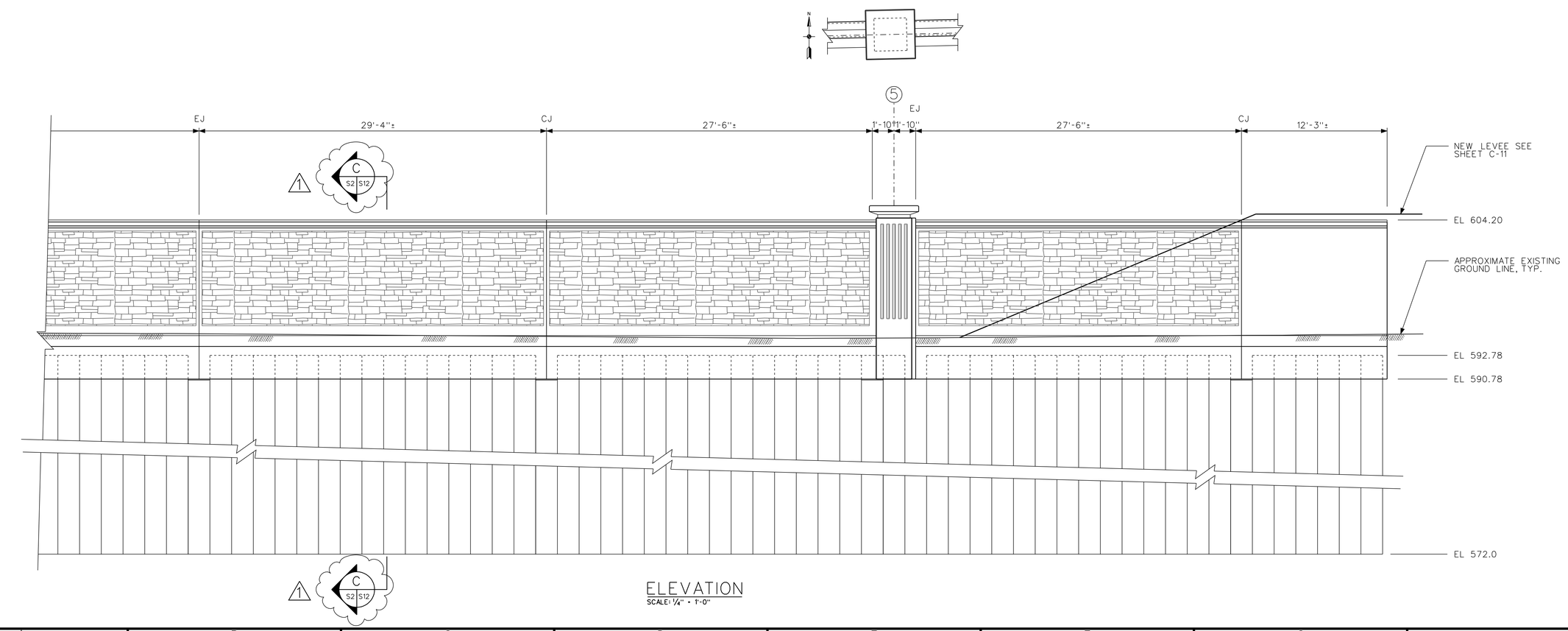

ELEVATION
SCALE: 1/4" = 1'-0"

US Army Corps of Engineers
Chicago District

SYMBOL	SHEET REFERENCES CORRECTIONS AMENDMENT DESCRIPTION	DATE APPROVED	SYMBOL	DESCRIPTION	DATE APPROVED
1					

DESIGNED BY: EGS
DATE: AUGUST 2007
DRAWN BY: EGS
SCALE: AS SHOWN
CHECKED BY: JJS
SOLICITATION NUMBER: W912P6-07-B0006
SUBMITTED BY: STEVE TREHARNE
DATE:

U.S. ARMY ENGINEER DISTRICT
CORPS OF ENGINEERS
CHICAGO, ILLINOIS

LITTLE CALUMET RIVER, INDIANA
LOCAL FLOOD PROTECTION
STAGE V, PHASE 2

BARING PUMP STATION I-WALL
ELEVATIONS SHEET 2

SHEET REFERENCE NUMBER:
S-02

PLOT DATE: 8/24/2007
FILENAME: D:\working\sm25152\LRC52-S02A001.dgn

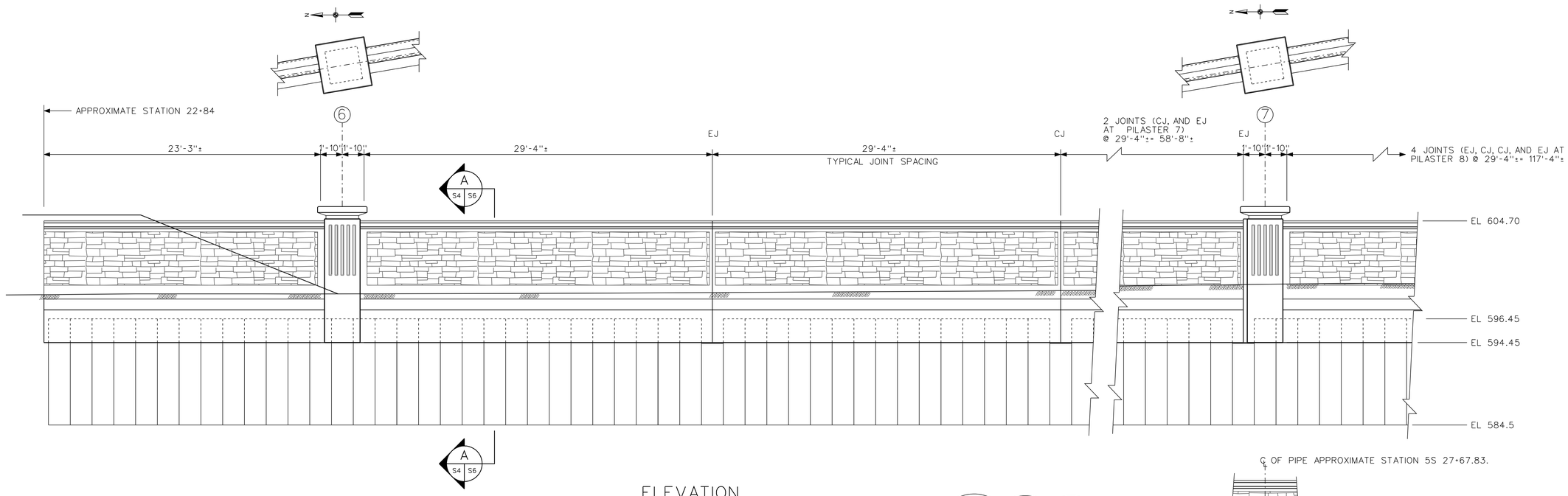

ELEVATION
SCALE: 1/4" = 1'-0"

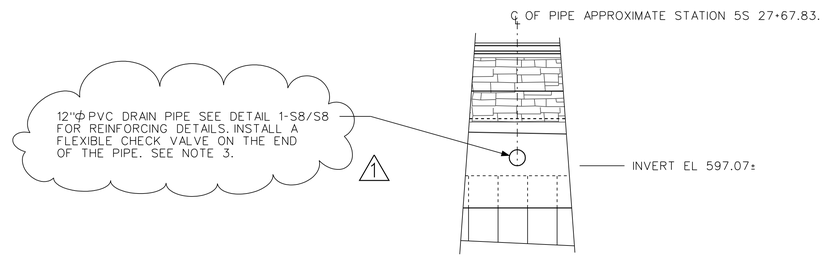

DETAIL 1
SCALE: 1/4" = 1'-0"
S4 S4

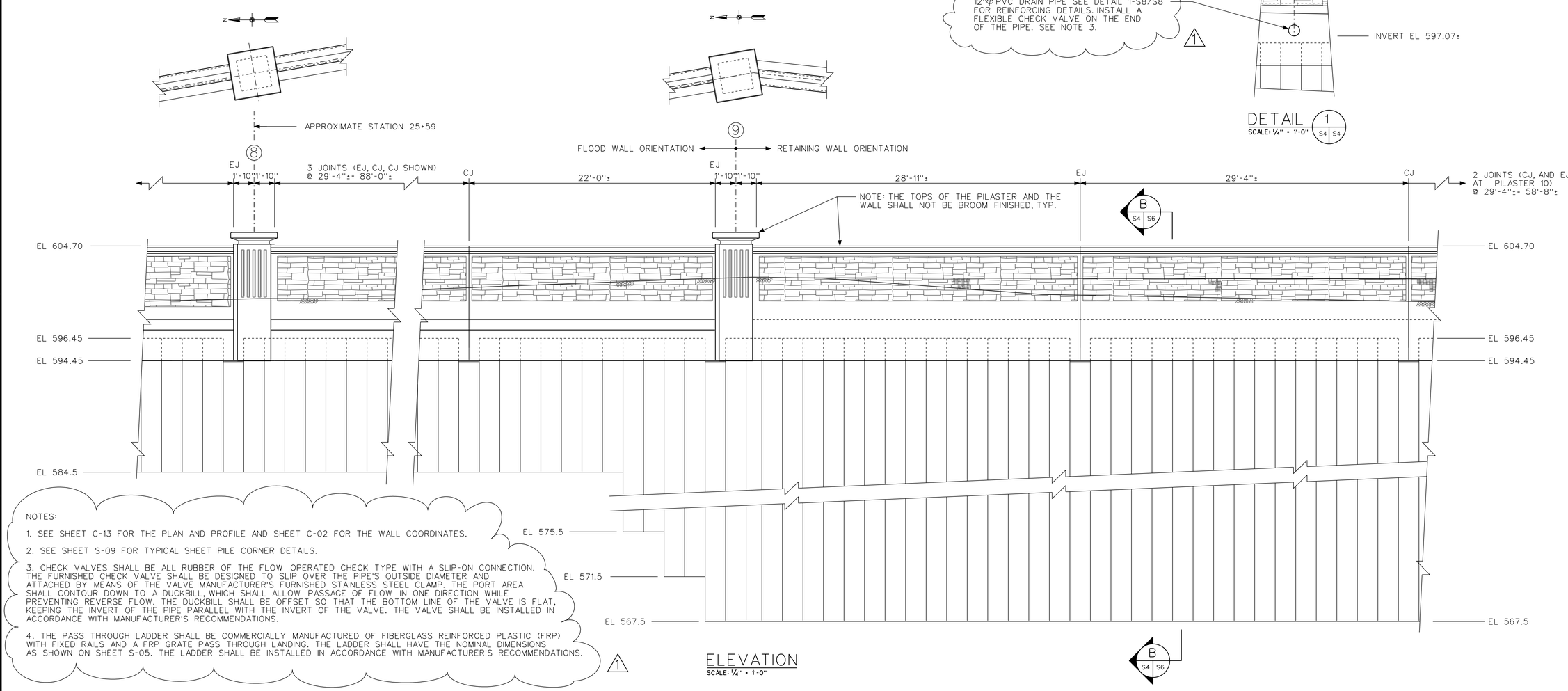

NOTES:

1. SEE SHEET C-13 FOR THE PLAN AND PROFILE AND SHEET C-02 FOR THE WALL COORDINATES.
2. SEE SHEET S-09 FOR TYPICAL SHEET PILE CORNER DETAILS.
3. CHECK VALVES SHALL BE ALL RUBBER OF THE FLOW OPERATED CHECK TYPE WITH A SLIP-ON CONNECTION. THE FURNISHED CHECK VALVE SHALL BE DESIGNED TO SLIP OVER THE PIPE'S OUTSIDE DIAMETER AND ATTACHED BY MEANS OF THE VALVE MANUFACTURER'S FURNISHED STAINLESS STEEL CLAMP. THE PORT AREA SHALL CONTOUR DOWN TO A DUCKBILL, WHICH SHALL ALLOW PASSAGE OF FLOW IN ONE DIRECTION WHILE PREVENTING REVERSE FLOW. THE DUCKBILL SHALL BE OFFSET SO THAT THE BOTTOM LINE OF THE VALVE IS FLAT, KEEPING THE INVERT OF THE PIPE PARALLEL WITH THE INVERT OF THE VALVE. THE VALVE SHALL BE INSTALLED IN ACCORDANCE WITH MANUFACTURER'S RECOMMENDATIONS.
4. THE PASS THROUGH LADDER SHALL BE COMMERCIALLY MANUFACTURED OF FIBERGLASS REINFORCED PLASTIC (FRP) WITH FIXED RAILS AND A FRP GRATE PASS THROUGH LANDING. THE LADDER SHALL HAVE THE NOMINAL DIMENSIONS AS SHOWN ON SHEET S-05. THE LADDER SHALL BE INSTALLED IN ACCORDANCE WITH MANUFACTURER'S RECOMMENDATIONS.

1

ELEVATION
SCALE: 1/4" = 1'-0"

US Army Corps of Engineers
Chicago District

SYMBOL	NOTE UPDATE AMENDMENT DESCRIPTION	DATE APPROVED	SYMBOL	DESCRIPTION	DATE APPROVED

DESIGNED BY: EGS
DATE: AUGUST 2007
DRAWN BY: EGS
SCALE: AS SHOWN
CHECKED BY: JJS
SOLICITATION NUMBER: W912P6-07-B-0006
SUBMITTED BY: STEVE TREHARNE
DATE:

U.S. ARMY ENGINEER DISTRICT
CORPS OF ENGINEERS
CHICAGO, ILLINOIS

LITTLE CALUMET RIVER, INDIANA
LOCAL FLOOD PROTECTION
STAGE V, PHASE 2

HART DITCH I-WALL
ELEVATIONS

SHEET REFERENCE NUMBER:
S-04
SHEET 80 OF 138

PLOT DATE: 8/24/2007
FILENAME: D:\working\gms25182\LRC52-S04AND1.dgn

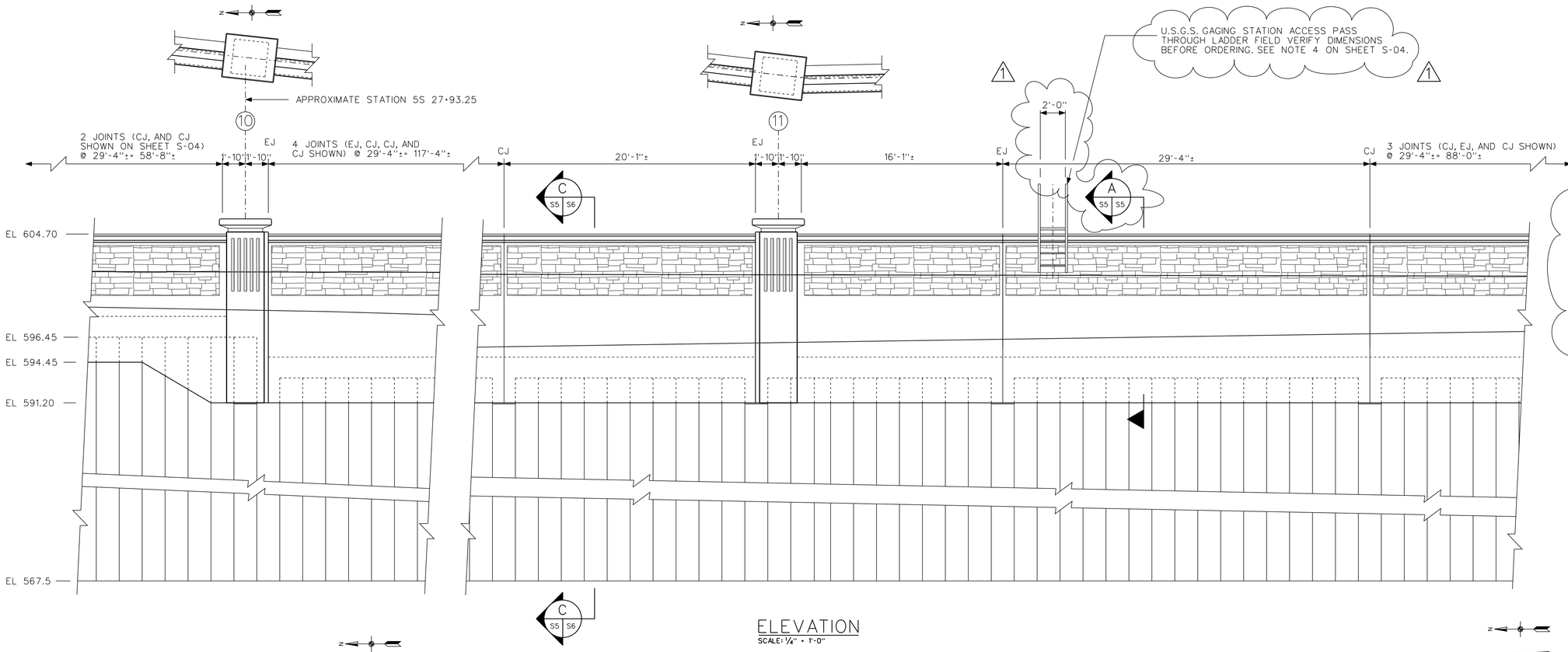

ELEVATION
SCALE: 1/4" = 1'-0"

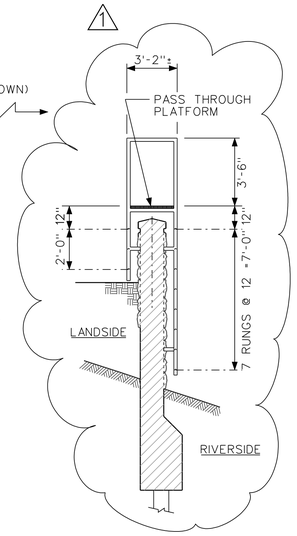

SECTION A S5 S5
NTS

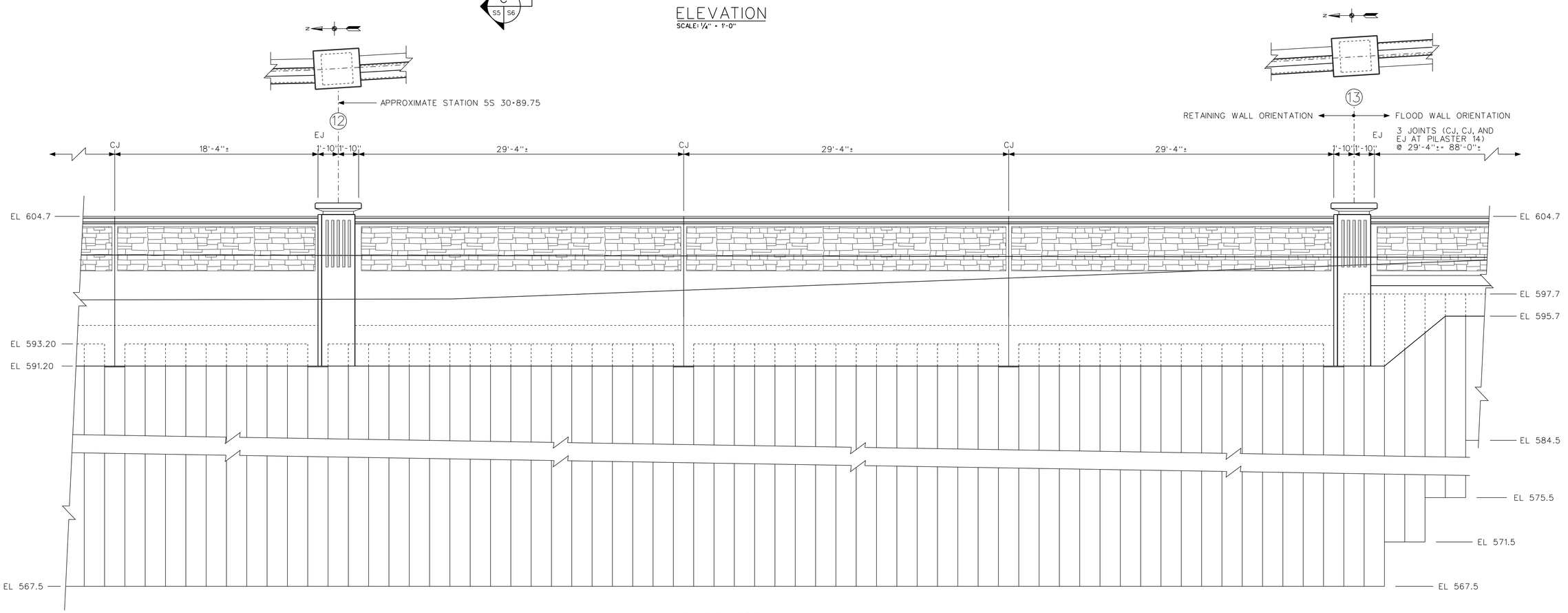

ELEVATION
SCALE: 1/4" = 1'-0"

US Army Corps of Engineers
Chicago District

SYMBOL	AMENDMENT DESCRIPTION	DATE	APPROVED	SYMBOL	DESCRIPTION	DATE	APPROVED
1	UPDATED NOTES, REFERENCES, DIMENSIONS						

DESIGNED BY: EGS
DATE: AUGUST 2007
DRAWN BY: EGS
SCALE: AS SHOWN
CHECKED BY: JJS
SOLICITATION NUMBER: W912P6-07-B-0006
SUBMITTED BY: STEVE TREHARNE
DATE:

U.S. ARMY ENGINEER DISTRICT
CORPS OF ENGINEERS
CHICAGO, ILLINOIS

LITTLE CALUMET RIVER, INDIANA
LOCAL FLOOD PROTECTION
STAGE V, PHASE 2

HART DITCH I-WALL
ELEVATIONS SHEET 2

SHEET REFERENCE NUMBER:
S-05
SHEET 81 OF 138

PLOT DATE: 8/24/2007
FILENAME: D:\working\gms2592\LRC52-S05AW01.dgn

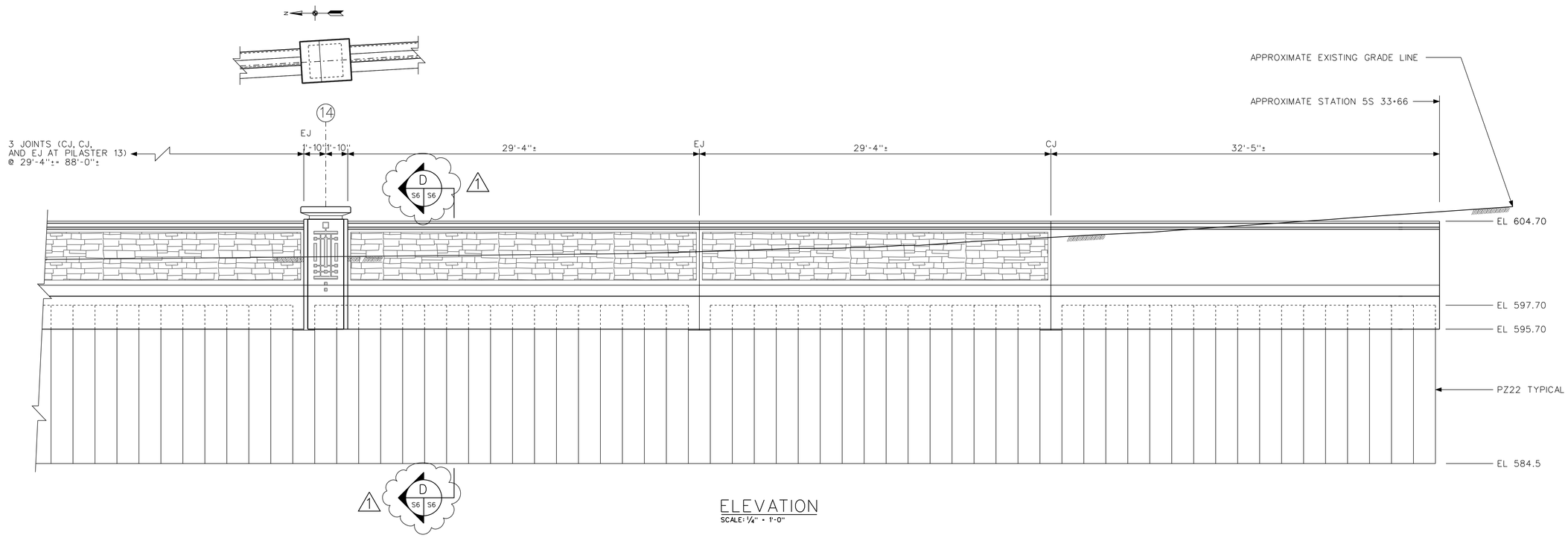

ELEVATION
SCALE: 1/4" = 1'-0"

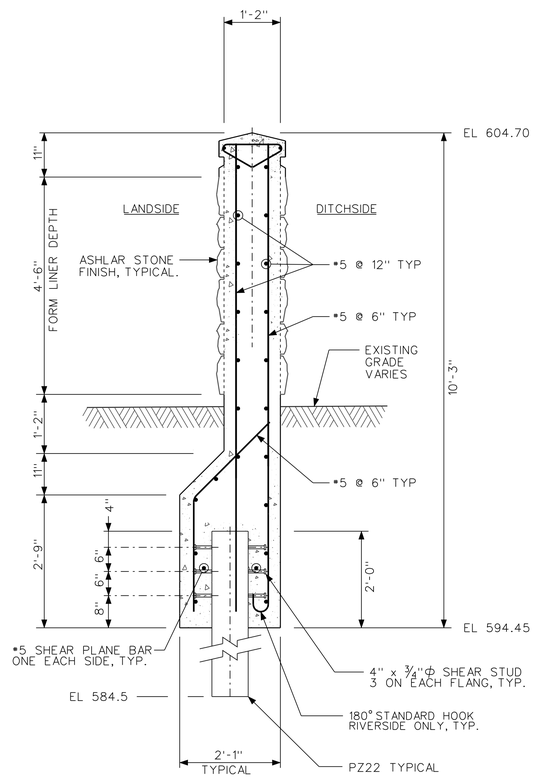

TYPICAL SECTION BETWEN THE START OF THE WALL AND PILASTER NO 9

SECTION A (S4 S6)
SCALE: 1/2" = 1'-0"

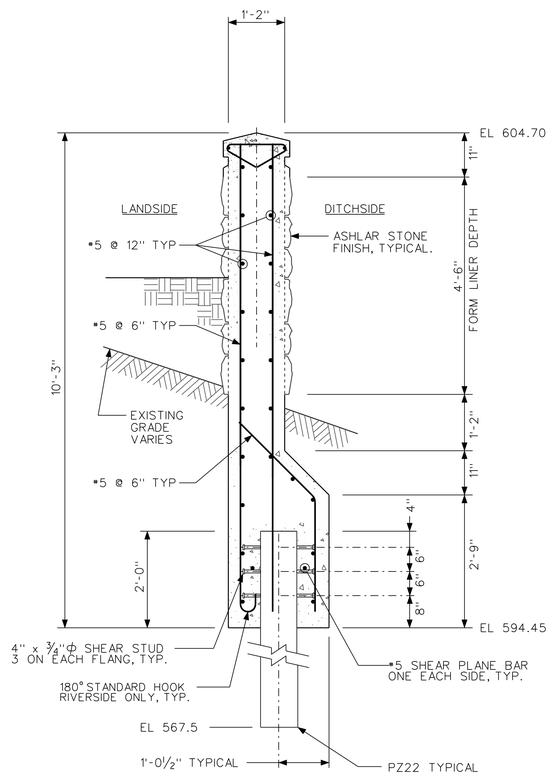

TYPICAL SECTION BETWEEN PILASTERS NO 9 AND NO 10

SECTION B (S4 S6)
SCALE: 1/2" = 1'-0"

NOTE: ALL COVER 3" UNLESS OTHERWISE NOTED.

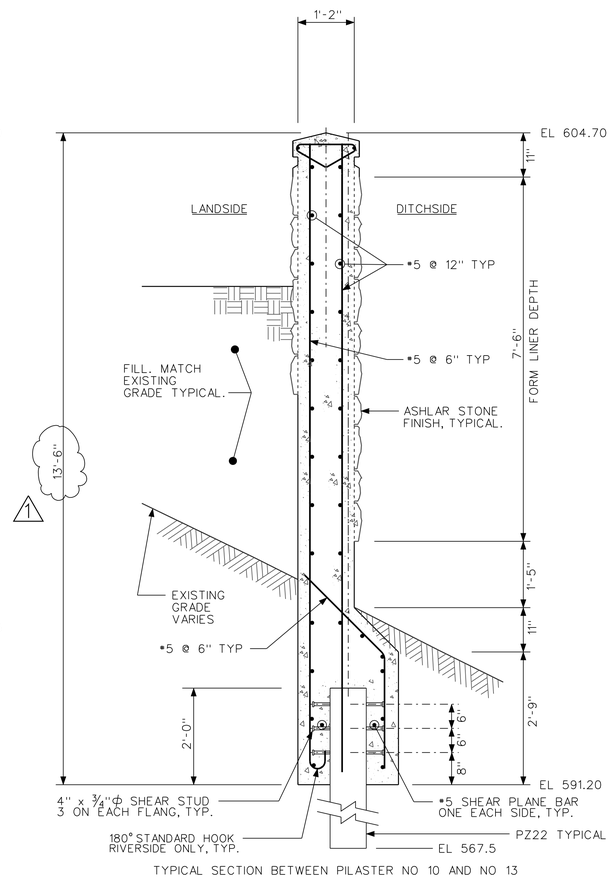

TYPICAL SECTION BETWEEN PILASTER NO 10 AND NO 13

SECTION C (S5 S6)
SCALE: 1/2" = 1'-0"

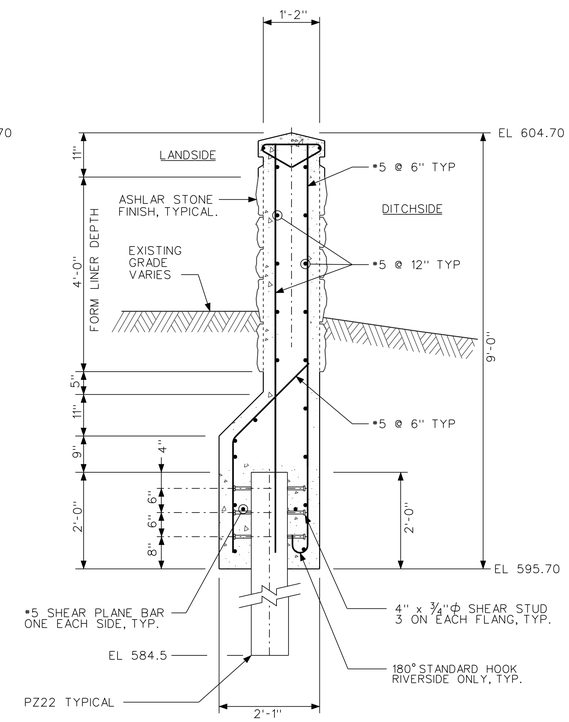

TYPICAL SECTION BETWEEN PILASTER NO 13 AND THE END OF THE WALL.

SECTION D (S6 S6)
SCALE: 1/2" = 1'-0"

US Army Corps of Engineers
Chicago District

SYMBOL	UPDATED REFERENCES AND DIMENSIONS AMENDMENT DESCRIPTION	DATE APPROVED SYMBOL	DESCRIPTION	DATE APPROVED
1				

DESIGNED BY: EGS
DRAWN BY: EGS
CHECKED BY: JJS
SUBMITTED BY: STEVE TREHARNE
DATE: AUGUST 2007
SCALE: AS SHOWN
SOLICITATION NUMBER: W912P8-07-B-0006
DATE:

U.S. ARMY ENGINEER DISTRICT
CORPS OF ENGINEERS
CHICAGO, ILLINOIS

LITTLE CALUMET RIVER, INDIANA
LOCAL FLOOD PROTECTION
STAGE V, PHASE 2
HART DITCH I-WALL
ELEVATIONS AND SECTIONS

SHEET REFERENCE NUMBER:
S-06
SHEET 82 OF 138

PLOT DATE: 8/24/2007
FILENAME: D:\working\sms25162\LRC52-S06A001.dgn

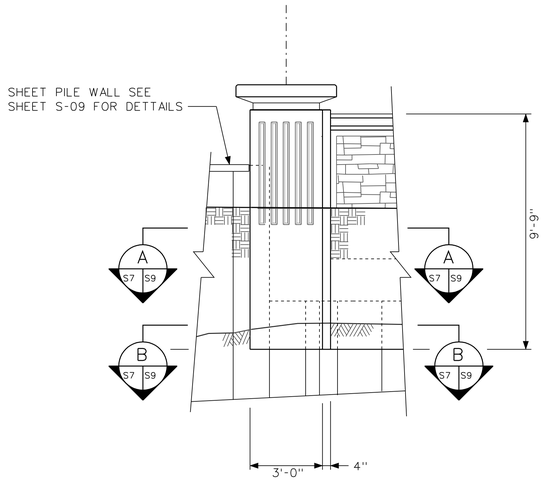

PILASTER 1 ELEVATION
SCALE: 3/8" = 1'-0"

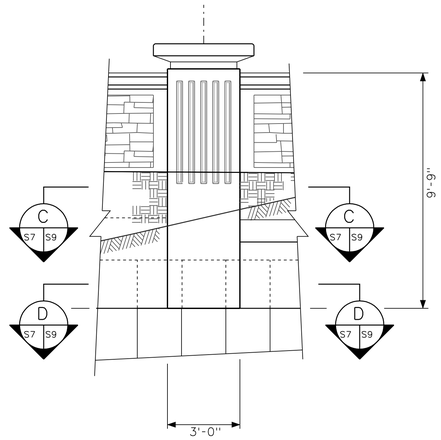

PILASTER 2 ELEVATION
SCALE: 3/8" = 1'-0"

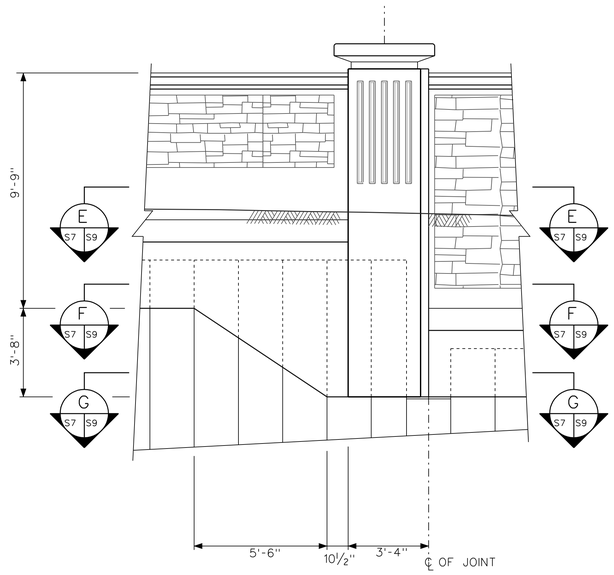

PILASTER 3 ELEVATION
SCALE: 3/8" = 1'-0"

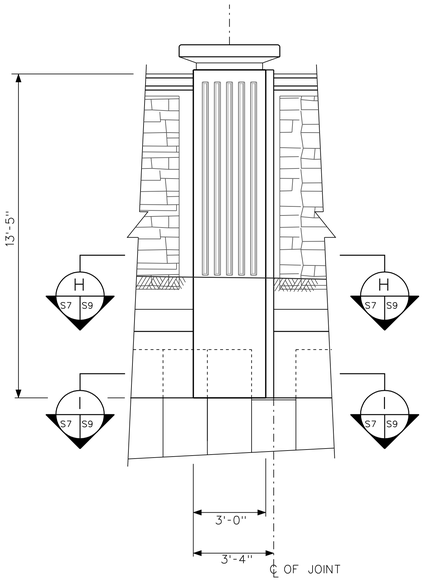

PILASTER 4 ELEVATION
SCALE: 3/8" = 1'-0"

BARING PUMP STATION I-WALL ELEVATIONS ◄ ► HART DITCH I-WALL ELEVATIONS

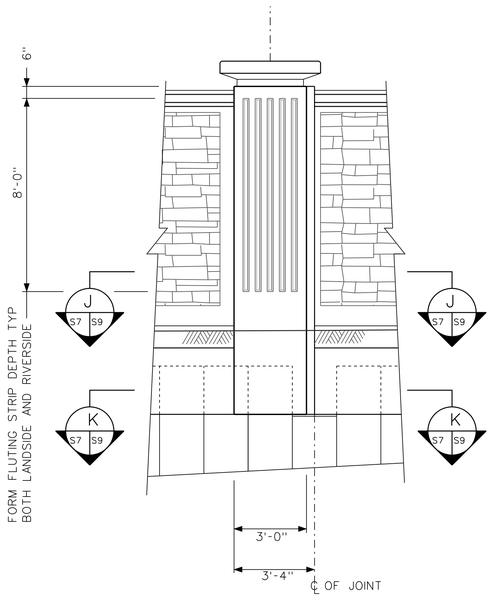

PILASTER 5 ELEVATION
SCALE: 3/8" = 1'-0"

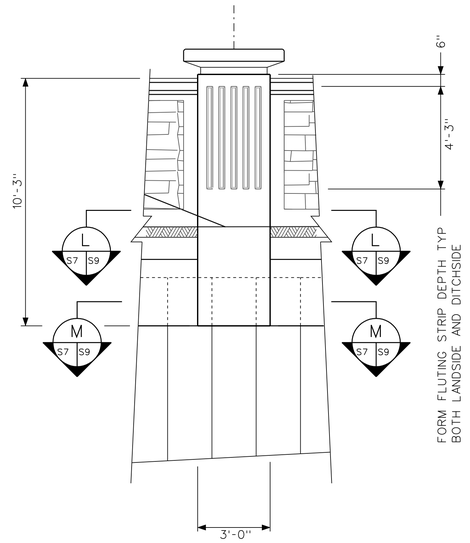

PILASTER 6 ELEVATION
SCALE: 3/8" = 1'-0"

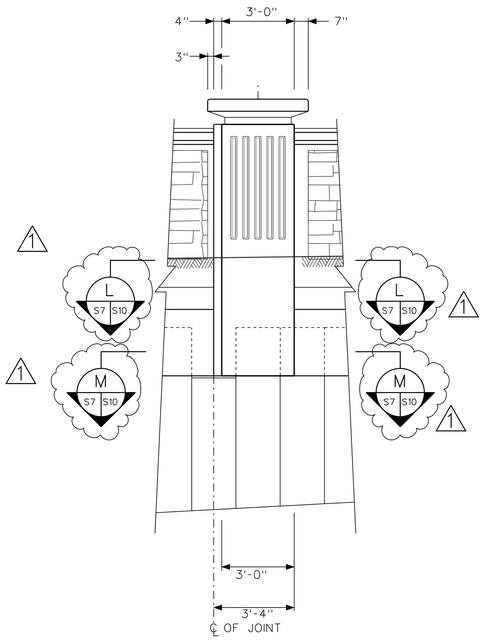

PILASTER 7 ELEVATION
SCALE: 3/8" = 1'-0"

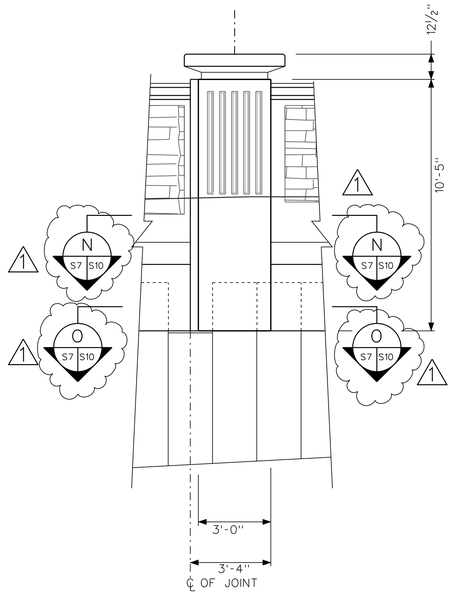

PILASTER 8 ELEVATION
SCALE: 3/8" = 1'-0"

US Army Corps of Engineers
Chicago District

SYMBOL	SHEET REFERENCES CORRECTIONS AMENDMENT DESCRIPTION	DATE APPROVED	SYMBOL	DESCRIPTION	DATE APPROVED
1					

DESIGNED BY: EGS
DATE: AUGUST 2007
DRAWN BY: EGS
SCALE: AS SHOWN
CHECKED BY: JJS
SOLICITATION NUMBER: W912P8-07-B-0006
SUBMITTED BY: STEVE TREHARNE
DATE:

U.S. ARMY ENGINEER DISTRICT
CORPS OF ENGINEERS
CHICAGO, ILLINOIS

LITTLE CALUMET RIVER, INDIANA
LOCAL FLOOD PROTECTION
STAGE V, PHASE 2
BARING PUMP STATION
AND HART DITCH I-WALL
PILASTER ELEVATIONS

SHEET REFERENCE NUMBER:
S-07
SHEET 83 OF 138

PLOT DATE: 8/24/2007
FILENAME: D:\working\dms25162\LRC52-S07AND1.dgn

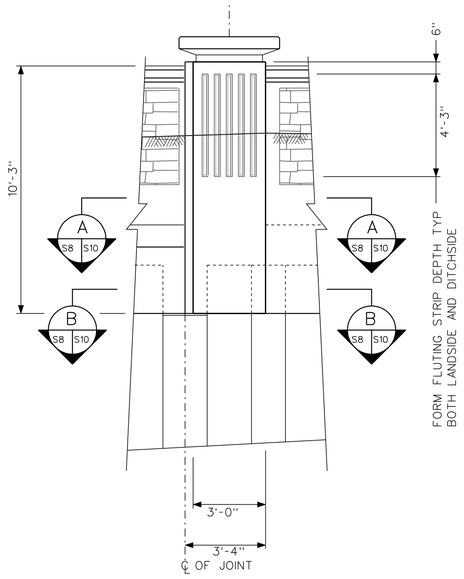

PILASTER 9 ELEVATION
SCALE: 3/8" = 1'-0"

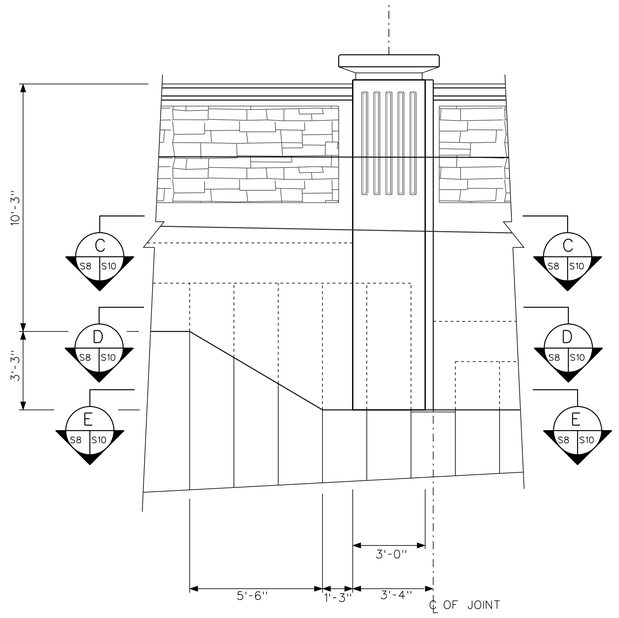

PILASTER 10 ELEVATION
SCALE: 3/8" = 1'-0"

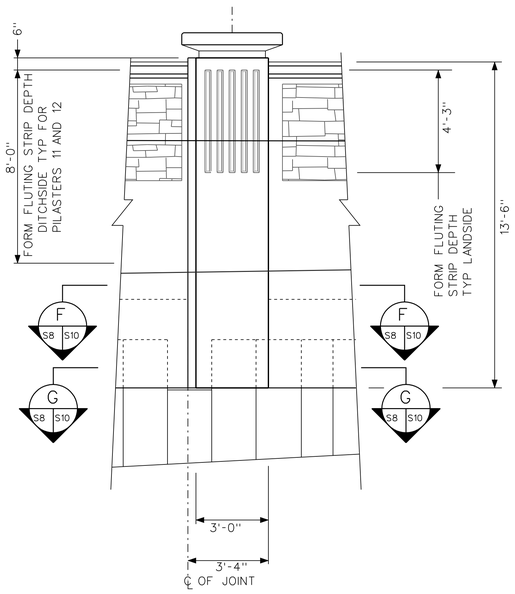

PILASTER 11 ELEVATION
SCALE: 3/8" = 1'-0"

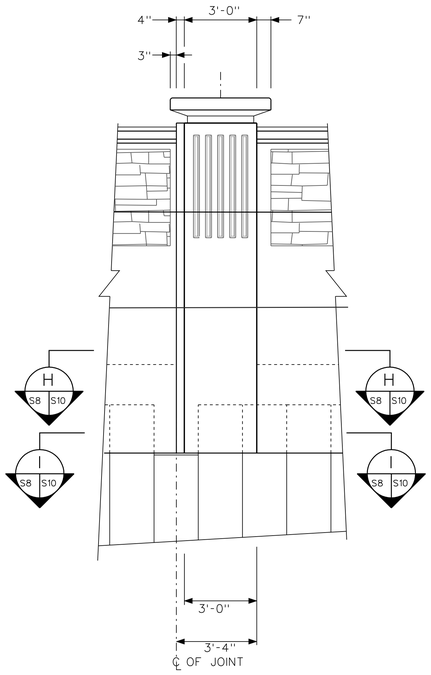

PILASTER 12 ELEVATION
SCALE: 3/8" = 1'-0"

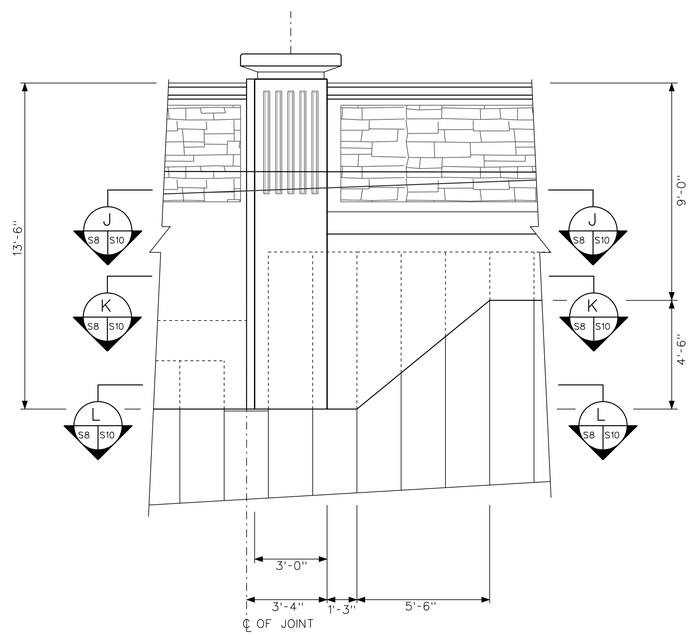

PILASTER 13 ELEVATION
SCALE: 3/8" = 1'-0"

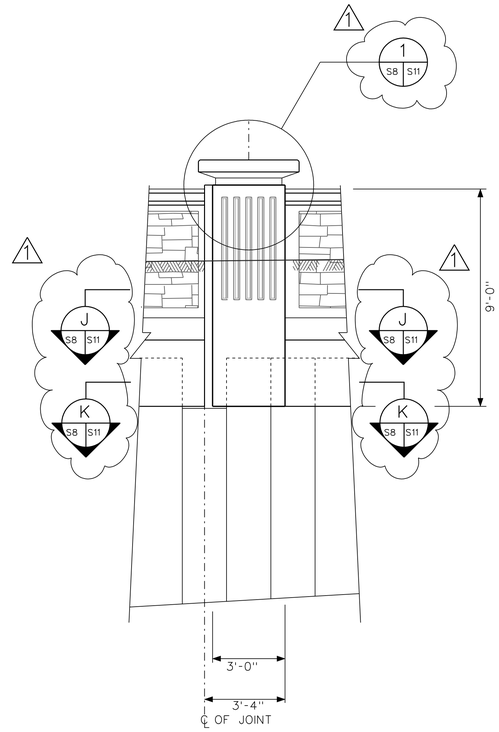

PILASTER 14 ELEVATION
SCALE: 3/8" = 1'-0"

US Army Corps of Engineers
Chicago District

SYMBOL	SHEET REFERENCES CORRECTIONS AMENDMENT DESCRIPTION	DATE APPROVED	SYMBOL	DESCRIPTION	DATE APPROVED

DESIGNED BY: EGS
DATE: AUGUST 2007
DRAWN BY: EGS
SCALE: AS SHOWN
CHECKED BY: JJS
SOLICITATION NUMBER: W912P8-07-B-0006
SUBMITTED BY: STEVE TREHARNE
DATE:

U.S. ARMY ENGINEER DISTRICT
CORPS OF ENGINEERS
CHICAGO, ILLINOIS

LITTLE CALUMET RIVER, INDIANA
LOCAL FLOOD PROTECTION
STAGE V, PHASE 2

HART DITCH I-WALL
PILASTER ELEVATIONS

SHEET REFERENCE NUMBER:
S-08

PLOT DATE: 8/24/2007
FILENAME: D:\working\gms25162\LRC52-S08AND01.dgn

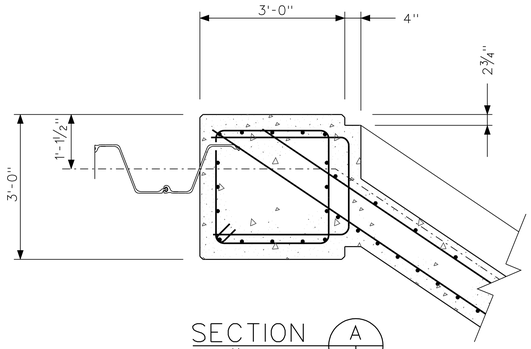

SECTION A (S8 | S9)
SCALE: ½" = 1'-0"

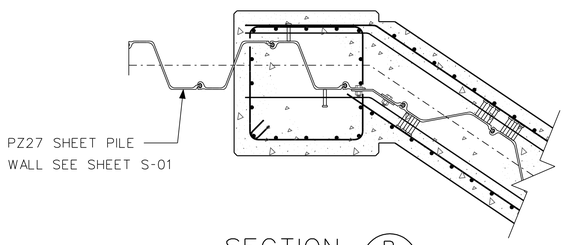

SECTION B (S8 | S9)
SCALE: ½" = 1'-0"

PILASTER 1 SECTIONS

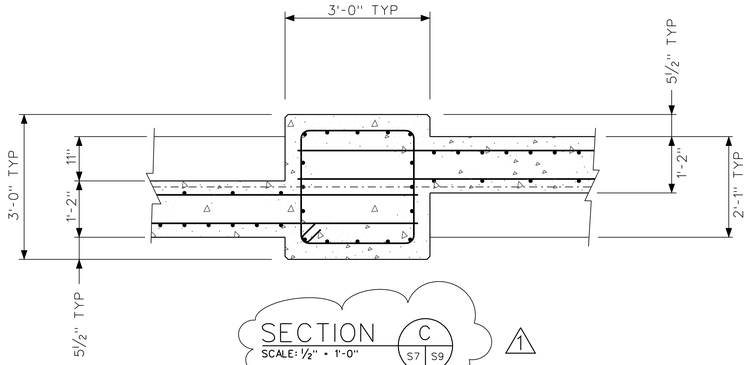

SECTION C (S7 | S9) 1
SCALE: ½" = 1'-0"

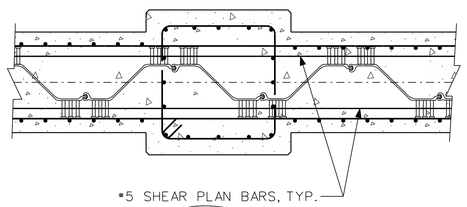

SECTION D (S7 | S9)
SCALE: ½" = 1'-0"

PILASTER 2 SECTIONS

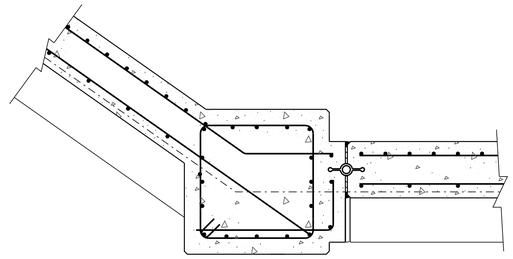

SECTION E (S7 | S9) 1
SCALE: ½" = 1'-0"

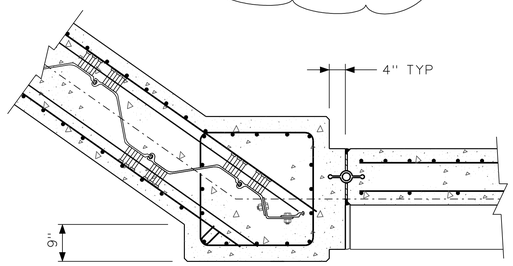

SECTION F (S7 | S9) 1
SCALE: ½" = 1'-0"

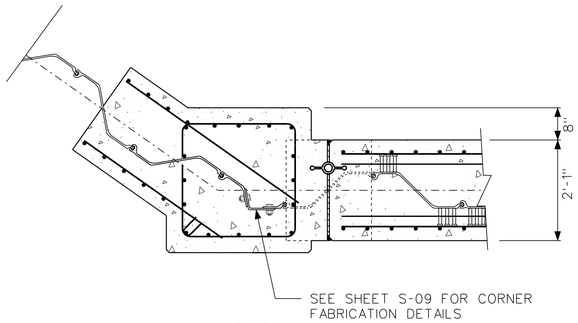

SECTION G (S7 | S9) 1
SCALE: ½" = 1'-0"

PILASTER 3 SECTIONS

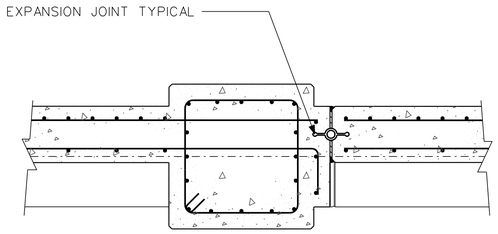

SECTION H (S8 | S9) J (S8 | S9)
SCALE: ½" = 1'-0"

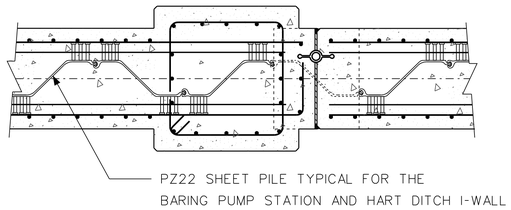

SECTION I (S8 | S9) K (S8 | S9)
SCALE: ½" = 1'-0"

PILASTER 4 AND 5 SECTIONS

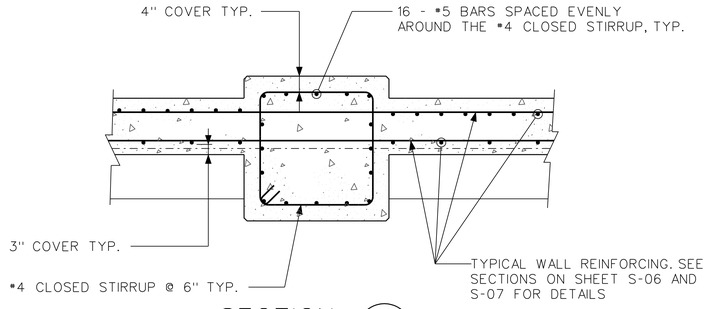

SECTION L (S8 | S9)
SCALE: ½" = 1'-0"

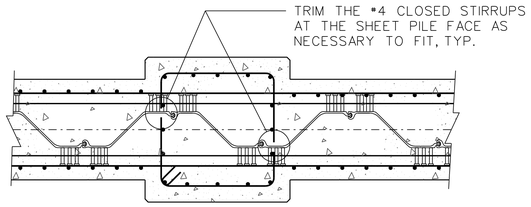

SECTION M (S8 | S9)
SCALE: ½" = 1'-0"

PILASTER 6 SECTIONS

US Army Corps of Engineers
Chicago District

SYMBOL	SHEET REFERENCES CORRECTIONS AMENDMENT DESCRIPTION	DATE APPROVED	SYMBOL	DESCRIPTION	DATE APPROVED
1					

DESIGNED BY: EGS
DATE: AUGUST 2007
DRAWN BY: EGS
SCALE: AS SHOWN
CHECKED BY: JJS
SOLICITATION NUMBER: W912P8-07-B-0006
SUBMITTED BY: STEVE TREHARNE
DATE:

U.S. ARMY ENGINEER DISTRICT
CORPS OF ENGINEERS
CHICAGO, ILLINOIS

LITTLE CALUMET RIVER, INDIANA
LOCAL FLOOD PROTECTION
STAGE V, PHASE 2
BARING PUMP STATION
AND HART DITCH I-WALL
PILASTER SECTIONS

SHEET REFERENCE NUMBER:
S-09
SHEET 85 OF 138

PLOT DATE: 8/24/2007
FILENAME: D:\working\dma25152\LRC52-S09A001.dgn

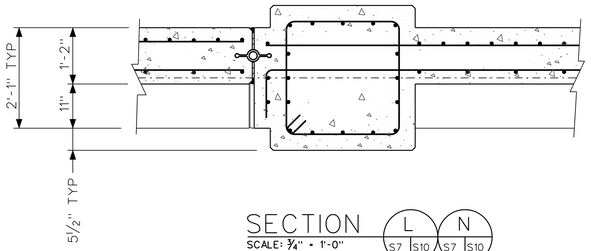

SECTION L N
SCALE: 3/4" = 1'-0"
S7 S10 S7 S10

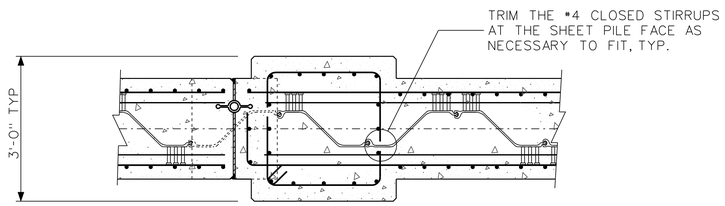

SECTION M O
SCALE: 3/4" = 1'-0"
S7 S10 S7 S10

PILASTER 7 AND 8 SECTIONS

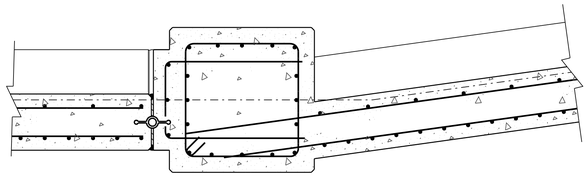

SECTION F
SCALE: 3/4" = 1'-0"
S8 S10

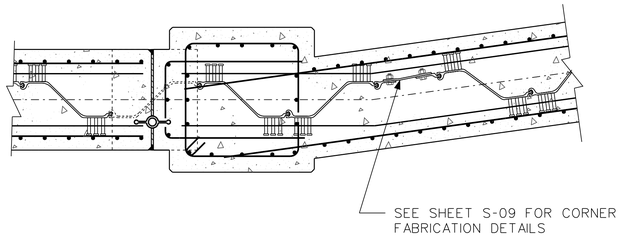

SECTION G
SCALE: 3/4" = 1'-0"
S8 S10

PILASTER 11 SECTIONS

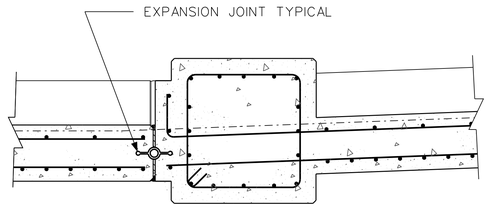

SECTION H
SCALE: 3/4" = 1'-0"
S8 S10

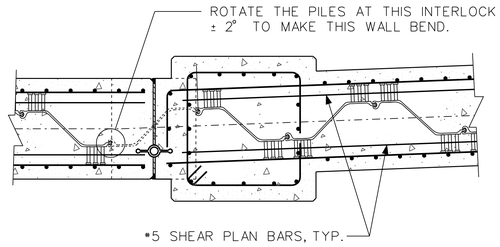

SECTION I
SCALE: 3/4" = 1'-0"
S8 S10

PILASTER 12 SECTIONS

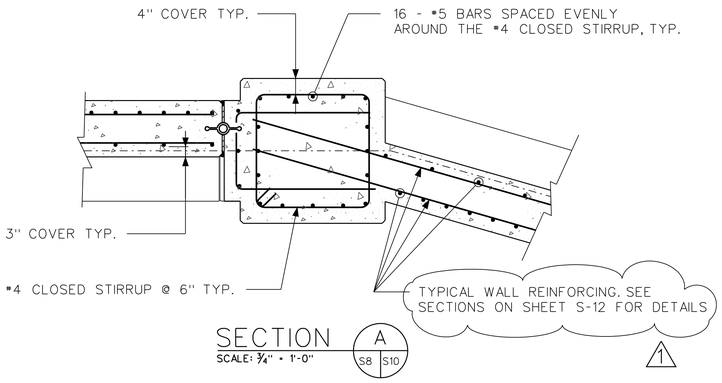

SECTION A
SCALE: 3/4" = 1'-0"
S8 S10

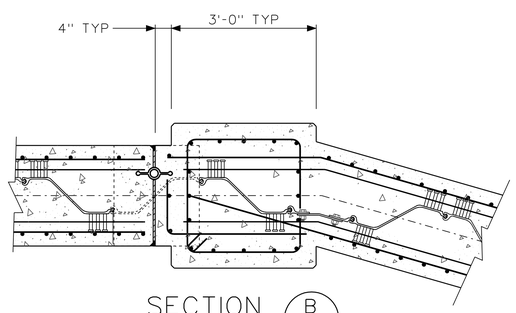

SECTION B
SCALE: 3/4" = 1'-0"
S8 S10

PILASTER 9 SECTIONS

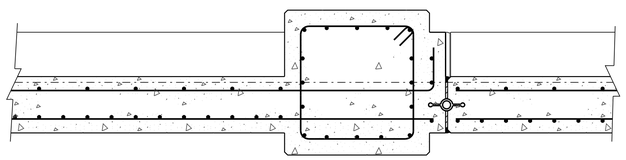

SECTION C
SCALE: 3/4" = 1'-0"
S8 S10

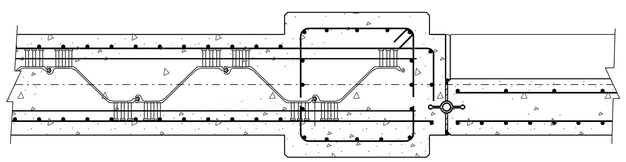

SECTION D
SCALE: 3/4" = 1'-0"
S8 S10

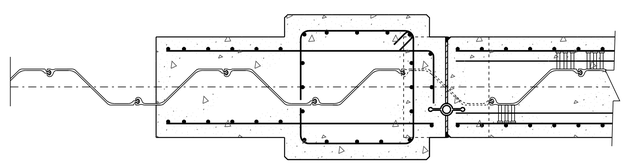

SECTION E
SCALE: 3/4" = 1'-0"
S8 S10

PILASTER 10 SECTIONS

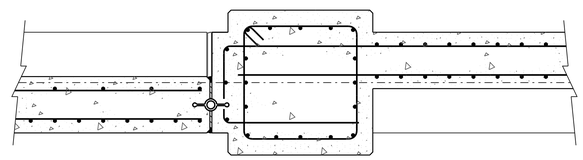

SECTION J
SCALE: 3/4" = 1'-0"
S8 S10

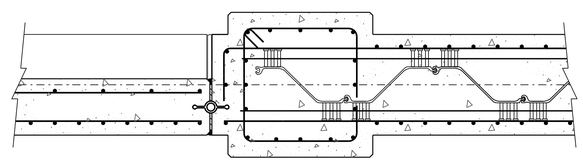

SECTION K
SCALE: 3/4" = 1'-0"
S8 S10

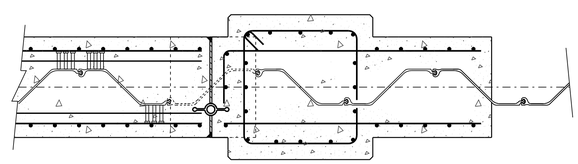

SECTION L
SCALE: 3/4" = 1'-0"
S8 S10

PILASTER 13 SECTIONS

US Army Corps of Engineers
Chicago District

SYMBOL	AMENDMENT DESCRIPTION	DATE APPROVED	SYMBOL	DESCRIPTION	DATE APPROVED
1	UPDATED NOTES WITH SHEET REFERENCE				

DESIGNED BY: EGS
DATE: AUGUST 2007
DRAWN BY: EGS
SCALE: AS SHOWN
CHECKED BY: JJS
SOLICITATION NUMBER: W912P6-07-B-0006
SUBMITTED BY: STEVE TREHARNE
DATE:

U.S. ARMY ENGINEER DISTRICT
CORPS OF ENGINEERS
CHICAGO, ILLINOIS

LITTLE CALUMET RIVER, INDIANA
LOCAL FLOOD PROTECTION
STAGE V, PHASE 2

HART DITCH I-WALL
PILASTER SECTIONS

SHEET REFERENCE NUMBER:
S-10
SHEET 86 OF 138

PLOT DATE: 8/24/2007
FILENAME: D:\working\dma25152\LRC52-S10\M01.dgn

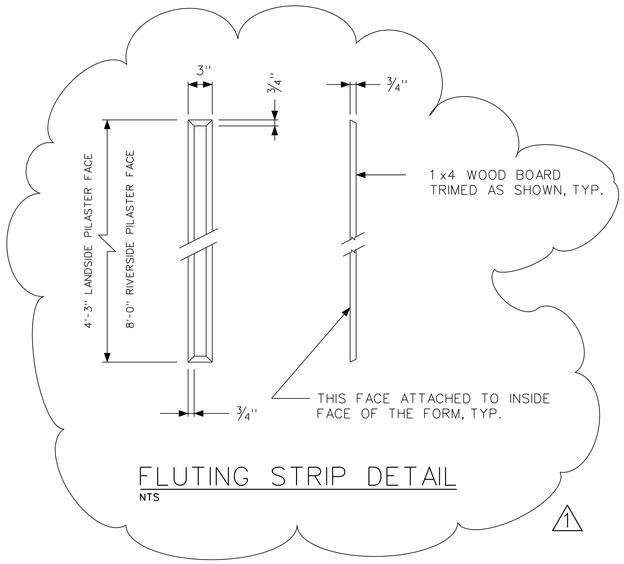

FLUTING STRIP DETAIL
NTS

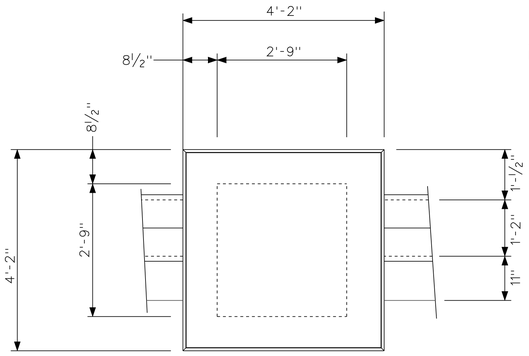

PILASTER PLAN
SCALE: ¾" = 1'-0"

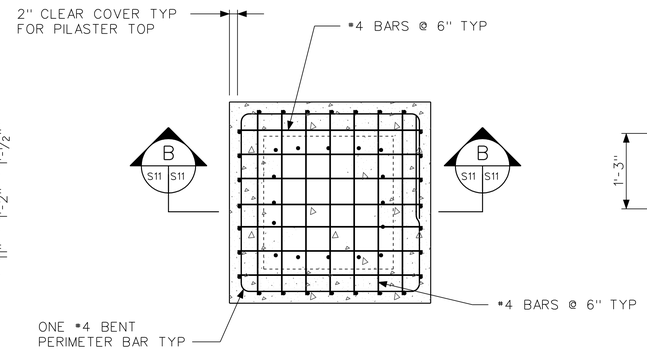

SECTION A
SCALE: ¾" = 1'-0"

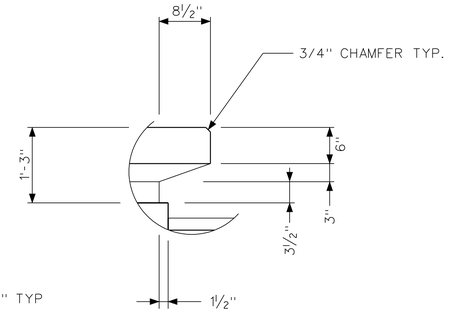

DETAIL 2
SCALE: ¾" = 1'-0"

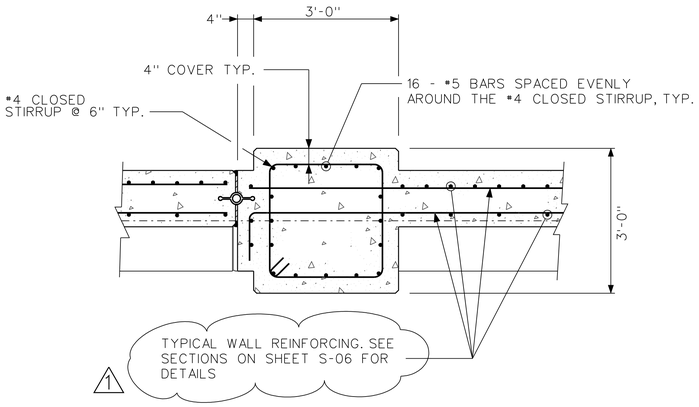

SECTION J
SCALE: ¾" = 1'-0"

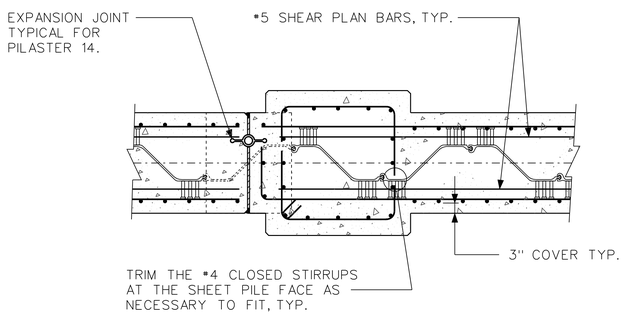

SECTION K
SCALE: ¾" = 1'-0"

PILASTER 14 SECTIONS

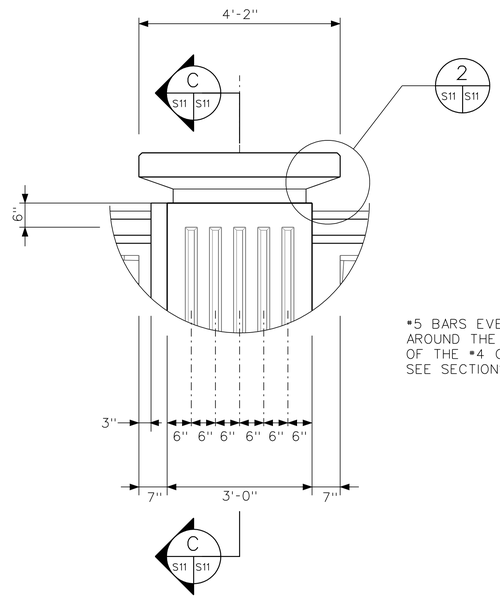

DETAIL 1
SCALE: ¾" = 1'-0"

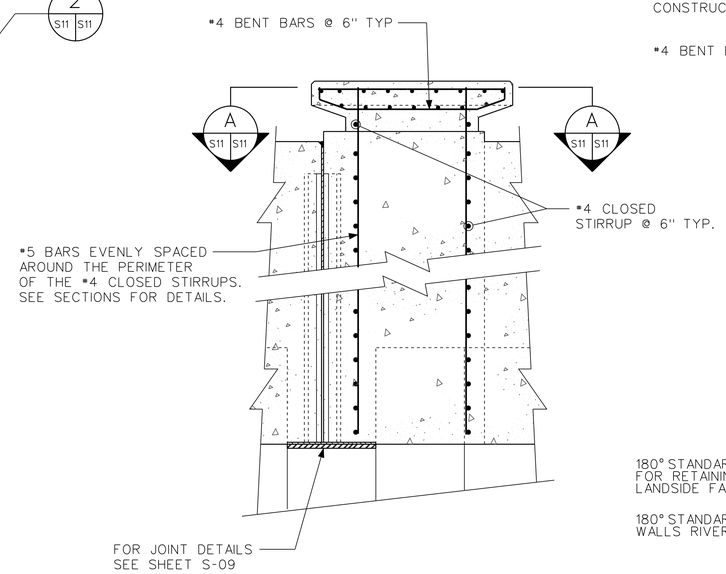

SECTION B
SCALE: ¾" = 1'-0"

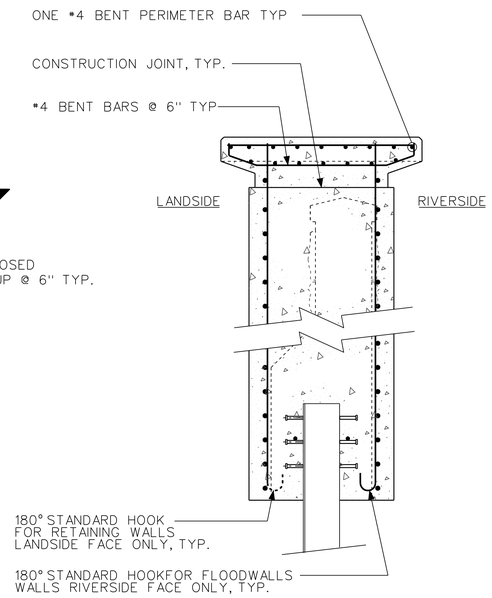

SECTION C
SCALE: ¾" = 1'-0"

TYPICAL BARING PUMP STATION AND
HART DITCH I-WALL PILASTER DETAILS

US Army Corps of Engineers
Chicago District

SYMBOL	UPDATED DETAIL AND NOTE REFERENCES AMENDMENT DESCRIPTION	DATE APPROVED	SYMBOL	DESCRIPTION	DATE APPROVED

DESIGNED BY: EGS
DATE: AUGUST 2007
DRAWN BY: EGS
SCALE: AS SHOWN
CHECKED BY: JJS
SOLICITATION NUMBER: W912P6-07-B-0006
SUBMITTED BY: STEVE TREHARNE
DATE:

U.S. ARMY ENGINEER DISTRICT
CORPS OF ENGINEERS
CHICAGO, ILLINOIS

LITTLE CALUMET RIVER, INDIANA
LOCAL FLOOD PROTECTION
STAGE V, PHASE 2

BARING PUMP STATION AND
HART DITCH I-WALL
PILASTER SECTION AND DETAILS

SHEET REFERENCE NUMBER:
S-11

PLOT DATE: 8/24/2007
FILENAME: D:\working\dma25162\LRC52-S11IM01.dgn

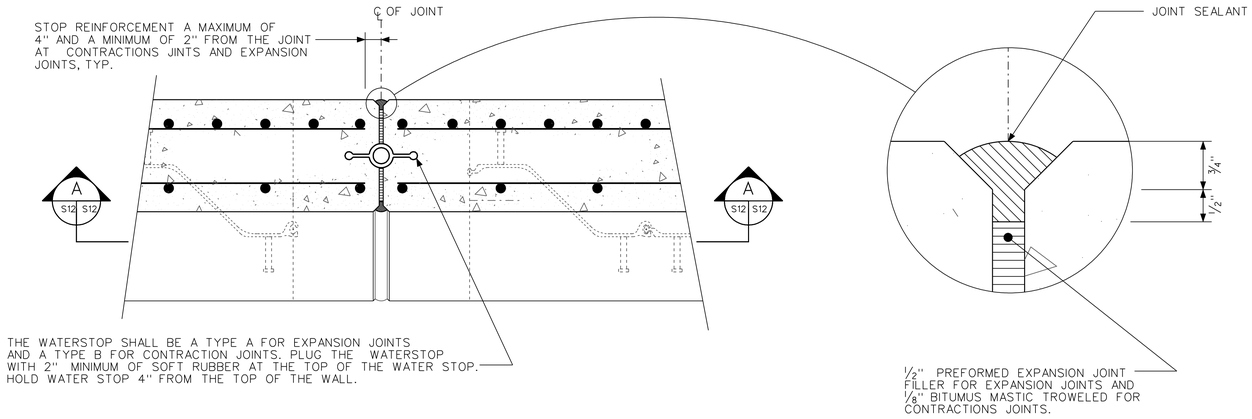

SECTION C S12 S12
SCALE: 1 1/2" = 1'-0"

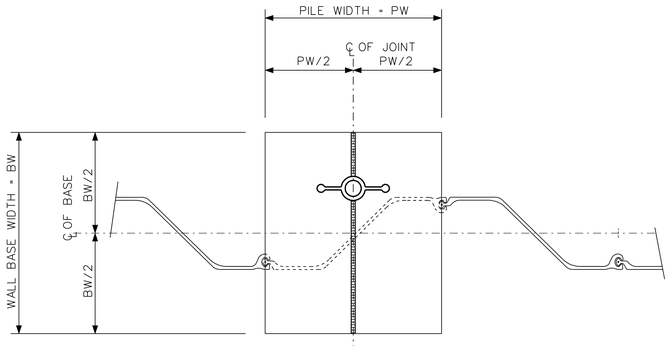

SECTION B S12 S12
SCALE: 1 1/2" = 1'-0"

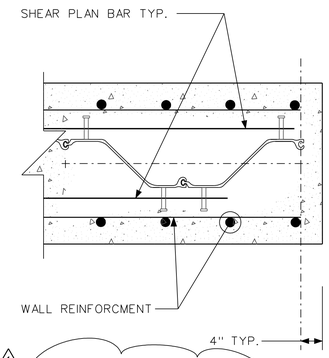

1 TYPICAL I-WALL END DETAIL
NTS

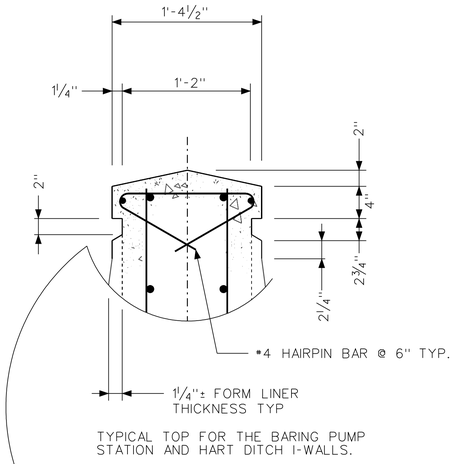

TYPICAL TOP FOR THE BARING PUMP STATION AND HART DITCH I-WALLS.

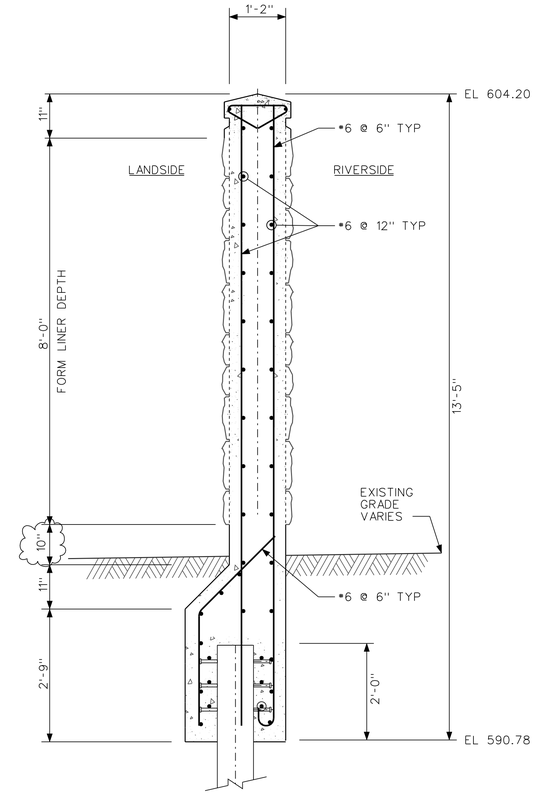

TYPICAL SECTION STATIONS 3+13.85 TO 6+53

SECTION C S2 S12
SCALE: 1/2" = 1'-0"

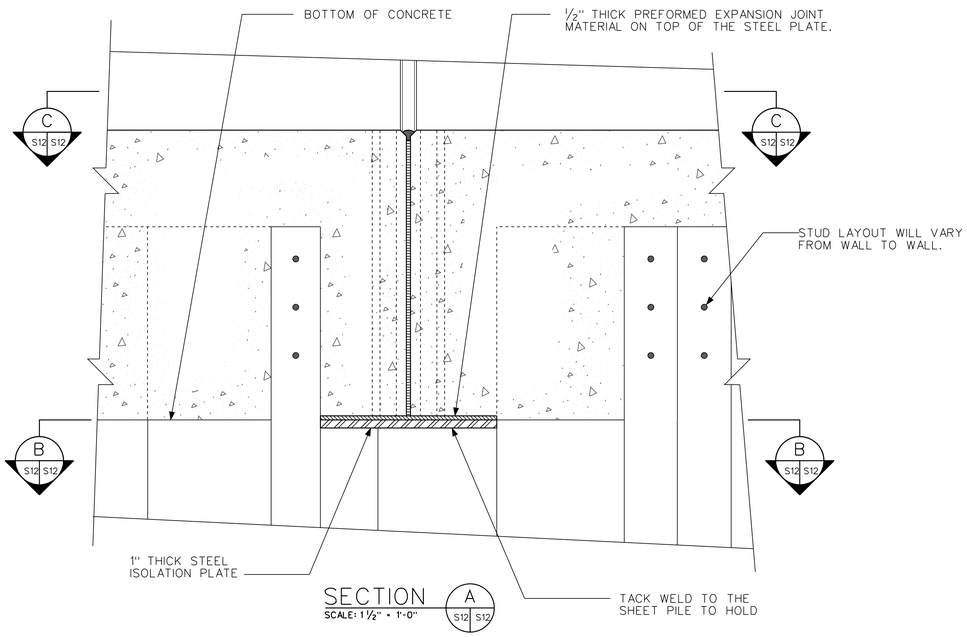

SECTION A S12 S12
SCALE: 1 1/2" = 1'-0"

TYPICAL EXPANSION/CONTRACTION JOINT DETAILS
SCALE: 1 1/2" = 1'-0"

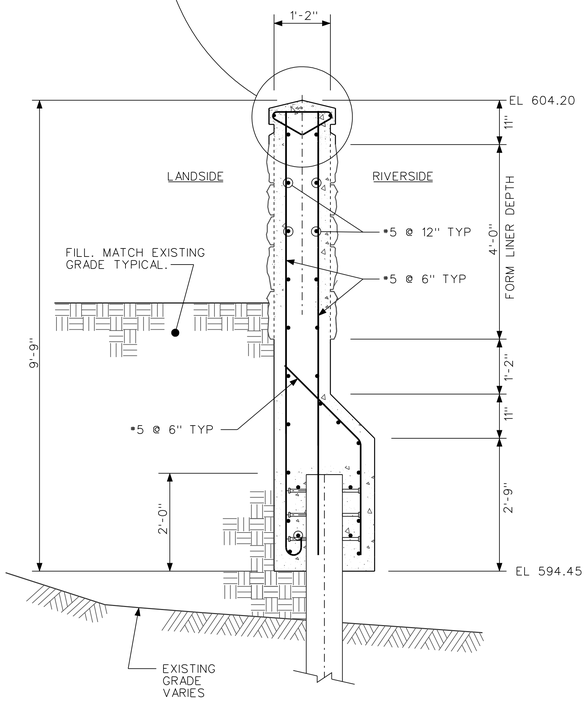

TYPICAL SECTION STATIONS 2+34 TO 2+74.33

SECTION A S1 S12
SCALE: 1/2" = 1'-0"

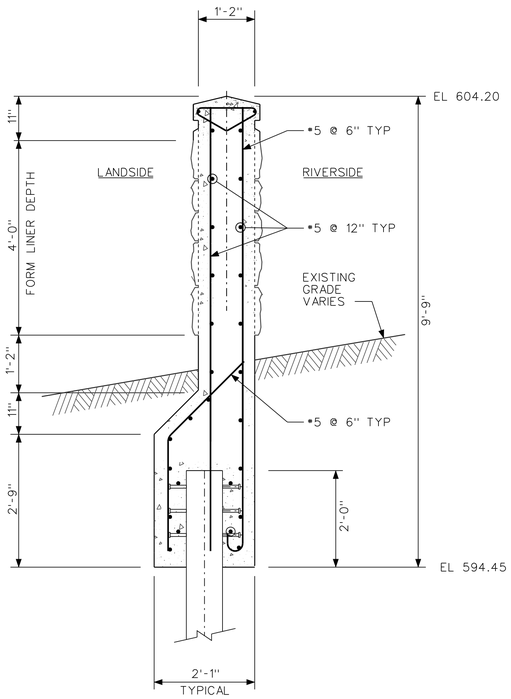

TYPICAL SECTION STATIONS 2+74.33 TO 3+13.85

SECTION B S1 S12
SCALE: 1/2" = 1'-0"

US Army Corps of Engineers
Chicago District

SYMBOL	DETAIL NAME UPDATE AMENDMENT DESCRIPTION	DATE APPROVED	SYMBOL	DESCRIPTION	DATE APPROVED

DESIGNED BY: EGS | DATE: AUGUST 2007
DRAWN BY: EGS | SCALE: AS SHOWN
CHECKED BY: JJS | SOLICITATION NUMBER: W912P8-07-B-0006
SUBMITTED BY: STEVE TRECHARNE | DATE:

U.S. ARMY ENGINEER DISTRICT
CORPS OF ENGINEERS
CHICAGO, ILLINOIS

LITTLE CALUMET RIVER, INDIANA
LOCAL FLOOD PROTECTION
STAGE V, PHASE 2
I-WALL SECTIONS AND TYPICAL DETAILS

SHEET REFERENCE NUMBER:
S-12
SHEET 88 OF 138

PLOT DATE: 8/24/2007
FILENAME: D:\working\dma25162\LRC52-S12\W01.dgn

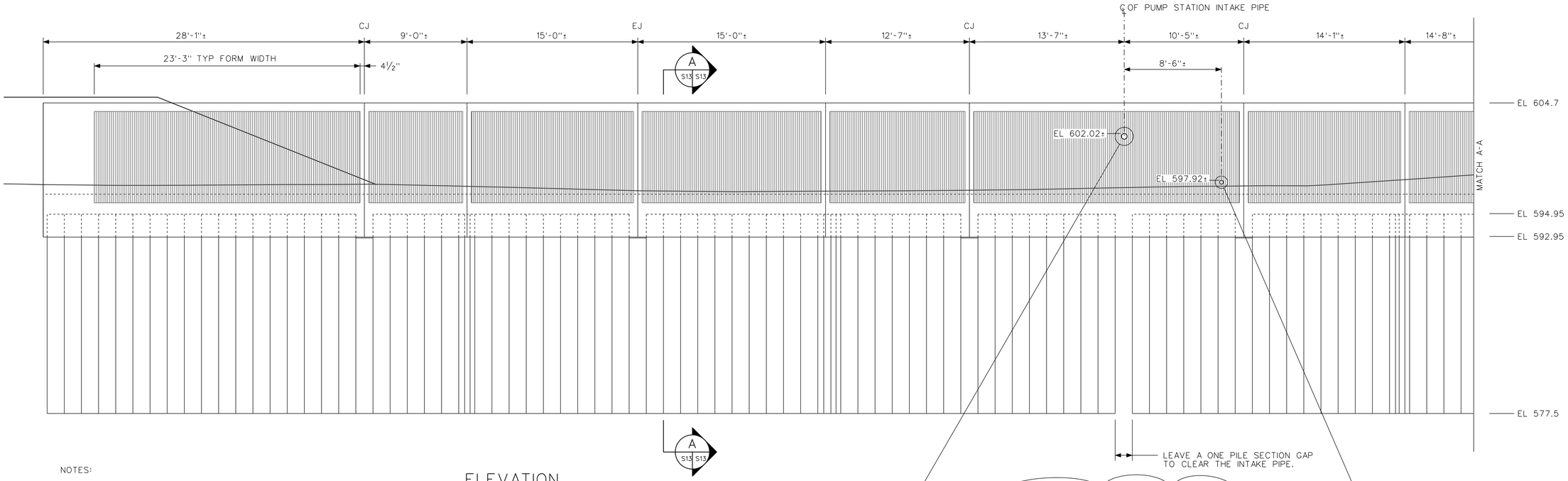

NOTES:

1. SEE SHEET C-14 FOR PLAN AND PROFILE AND SHEET C-03 FOR WALL COORDINATES.

2. SEE SHEET S-09 FOR SHEET PILE WALL CORNER DETAILS.

ELEVATION
SCALE: ½" = 1'-0"

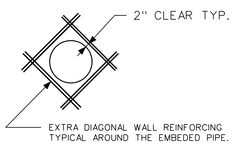

DETAIL 1 (S13 S13)
NTS

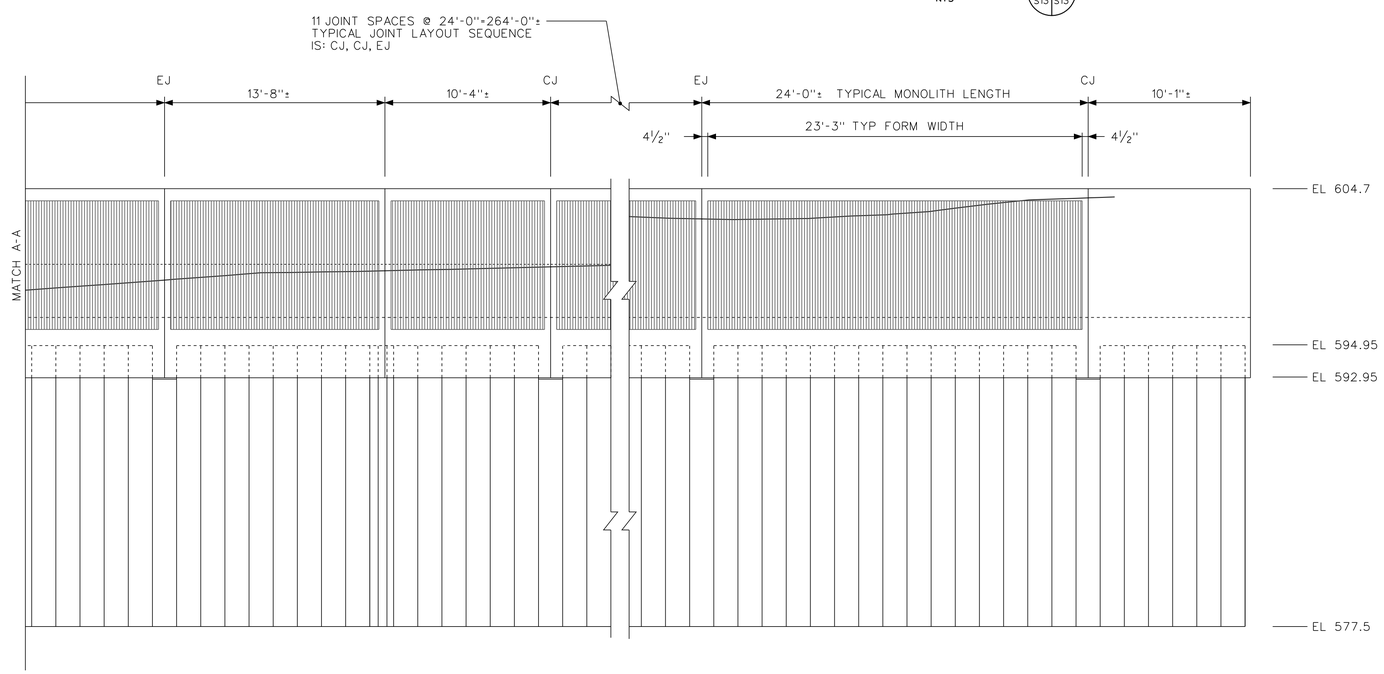

ELEVATION
SCALE: ½" = 1'-0"

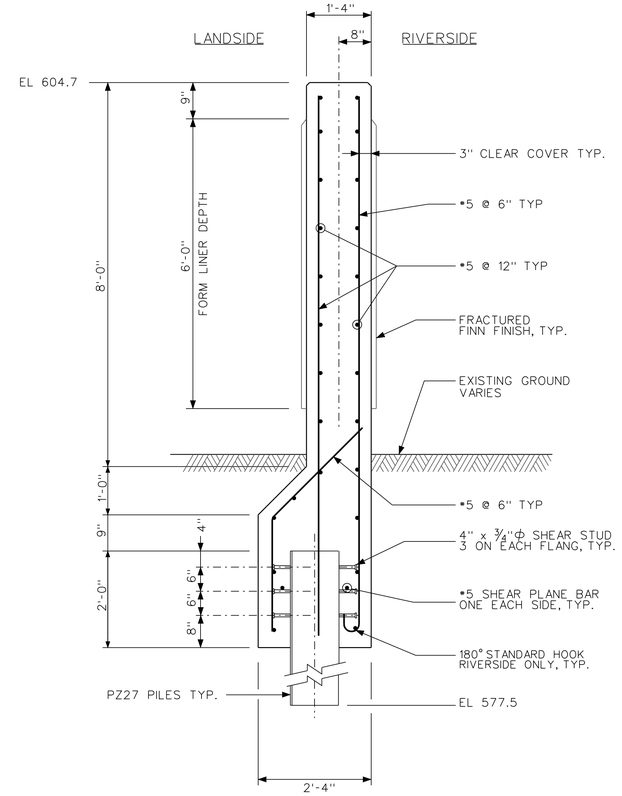

SECTION A (S13 S13)
SCALE: ¾" = 1'-0"

US Army Corps of Engineers
Chicago District

SYMBOL	UPDATED NOTES WITH SHEET REFERENCE AMENDMENT DESCRIPTION	DATE APPROVED	SYMBOL	DESCRIPTION	DATE APPROVED
1					

DESIGNED BY: EGS
DRAWN BY: EGS
CHECKED BY: JJS
SUBMITTED BY: STEVE TREHARNE
DATE: AUGUST 2007
SCALE: AS SHOWN
SOLICITATION NUMBER: W912P8-07-B-0006
DATE:

U.S. ARMY ENGINEER DISTRICT
CORPS OF ENGINEERS
CHICAGO, ILLINOIS

LITTLE CALUMET RIVER, INDIANA
LOCAL FLOOD PROTECTION
STAGE V, PHASE 2
WICKER PARK PUMP STATION
I-WALL
ELEVATION AND SECTION

SHEET REFERENCE NUMBER:
S-13
SHEET 89 OF 138

PLOT DATE: 8/24/2007
FILENAME: D:\working\sm25152\LRC52-S13A001.dgn

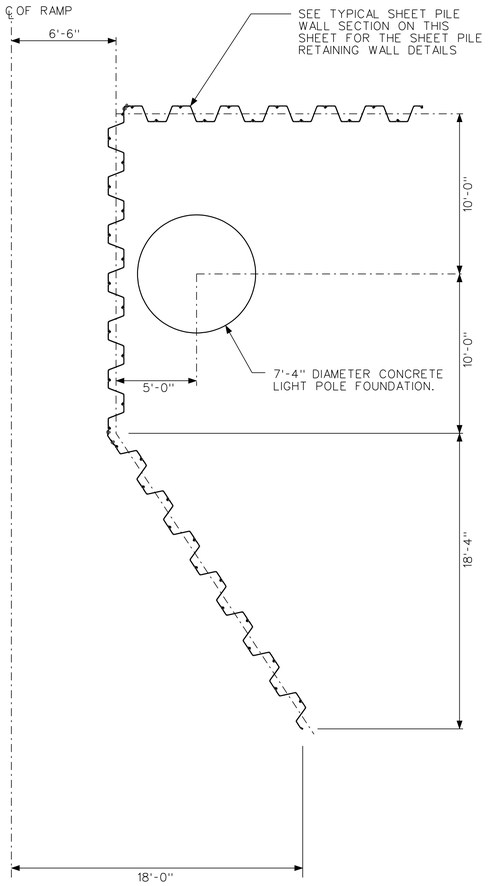

SECTION A S14 S14
NTS

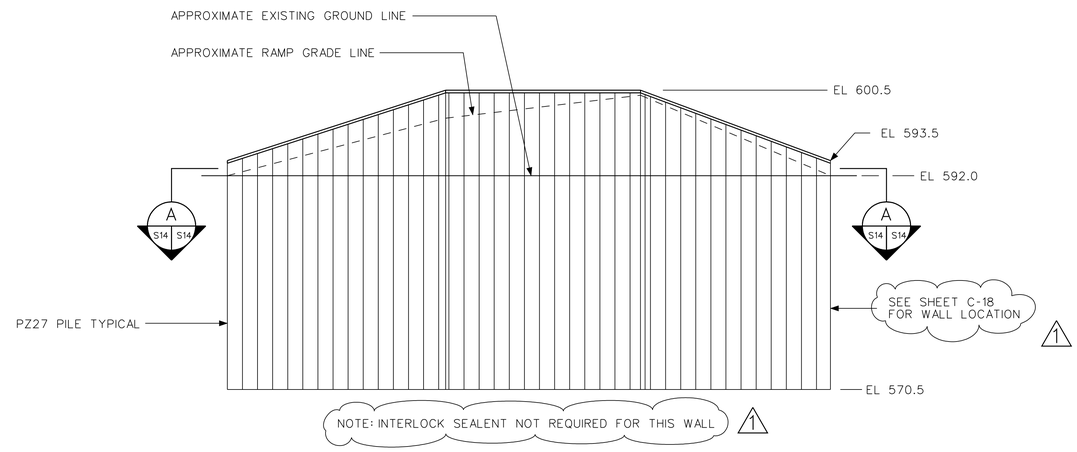

UTILITY RAMP RETAINING WALL PROFILE
NTS

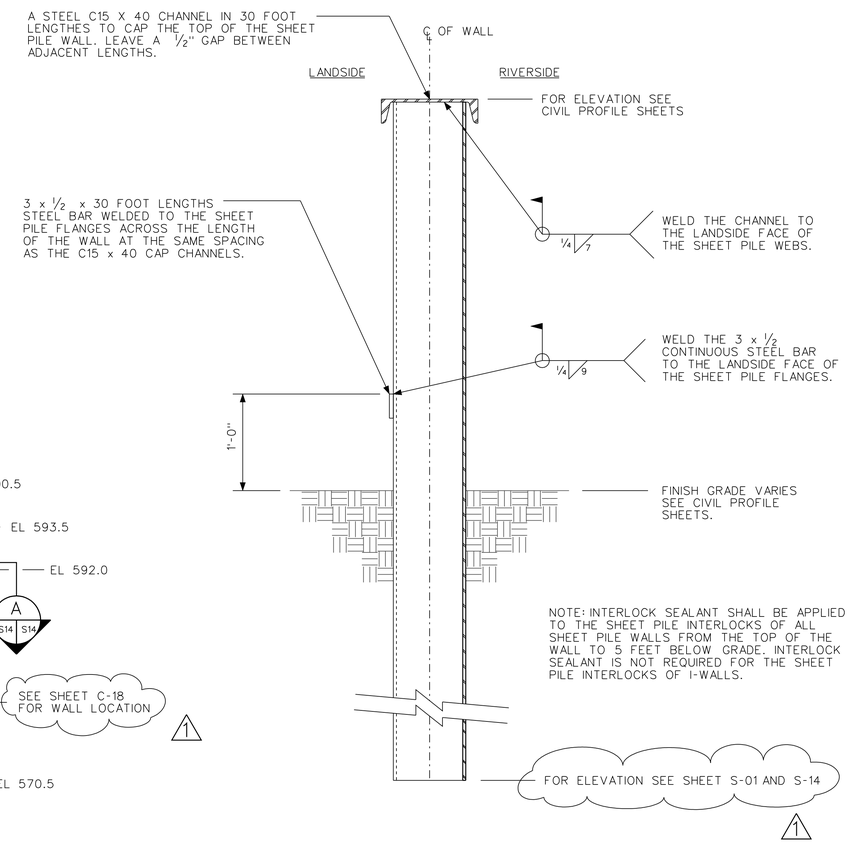

TYPICAL SHEET PILE WALL SECTION
NTS

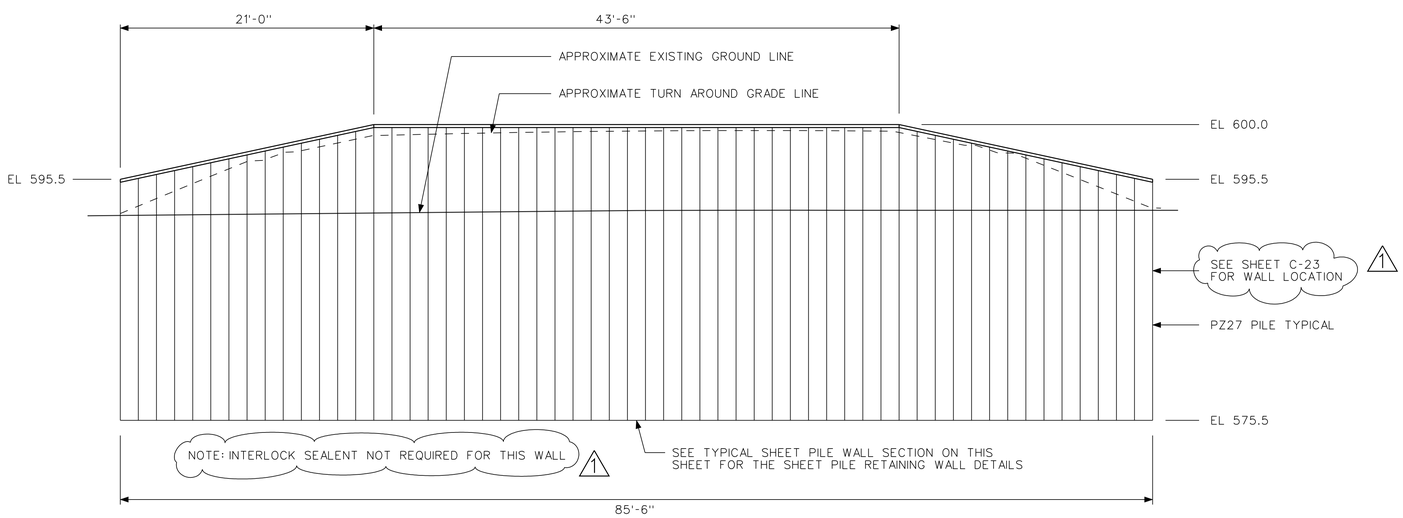

TURN AROUND RETAINING WALL PROFILE
NTS

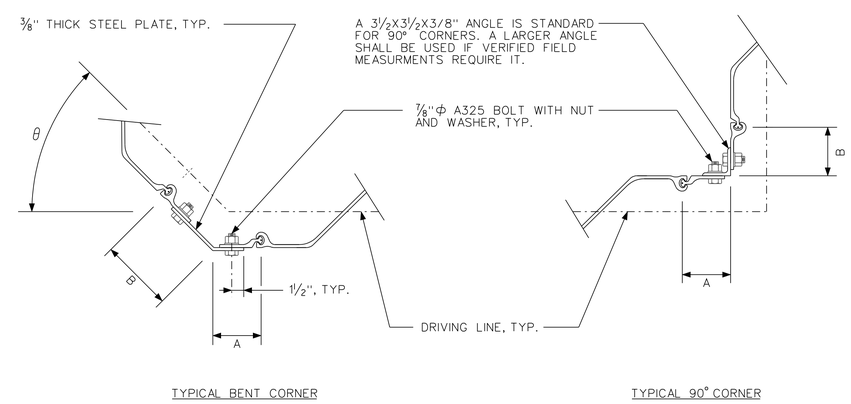

CONNECTION NOTES:

1. FIELD VERIFY ALL DIMENSIONS PRIOR TO FABRICATION.

2. THE STANDARD A AND B DIMENSION IS 6 INCHES. BOTH DIMENSIONS CAN VARY BASED ON FIELD VERIFIED DIMENSIONS WITH A MAXIMUM LENGTH OF 12 INCHES. THE A AND B DIMENSION FOR THE BENT CORNER SHALL BE DETERMINED FORM THE FIELD VERIFIED DIMENSIONS.

3. ALL FASTERNERS ARE 7/8"Φ A325 BOLTS WITH NUTS AND WASHERS SPACED AT 6 INCH ON CENTERS THROUGHOUT THE LENGTH OF THE SECTION, EXCEPT FOR 2 FEET AT EACH END WHERE THEY ARE LOCATED ON 3 INCH CENTERS.

4. SEE THE CIVIL PLAN AND PROFILE SHEETS FOR FLOOD WALL BEND COORDINATES TO CALCULATE THE BEND ANGLE θ.

TYPICAL FABRICATED SHEET PILE CORNER DETAILS
SCALE: 1 1/2" = 1'-0"

US Army Corps of Engineers
Chicago District

SYMBOL	AMENDMENT DESCRIPTION	DATE APPROVED	SYMBOL	DESCRIPTION	DATE APPROVED
1	NOTES ADDED AND UPDATED				

DESIGNED BY: EGS
DATE: AUGUST 2007
DRAWN BY: EGS
SCALE: AS SHOWN
CHECKED BY: JJS
SOLICITATION NUMBER: W912P6-07-B-0006
SUBMITTED BY: STEVE TREHARNE
DATE:

U.S. ARMY ENGINEER DISTRICT
CORPS OF ENGINEERS
CHICAGO, ILLINOIS

LITTLE CALUMET RIVER, INDIANA
LOCAL FLOOD PROTECTION
STAGE V, PHASE 2
TYPICAL SHEET PILE CORNER AND WALL DETAILS

SHEET REFERENCE NUMBER:
S-14
SHEET 90 OF 138

PLOT DATE: 8/24/2007
FILENAME: D:\working\dmx25162\LRC52-S14-M01.dgn

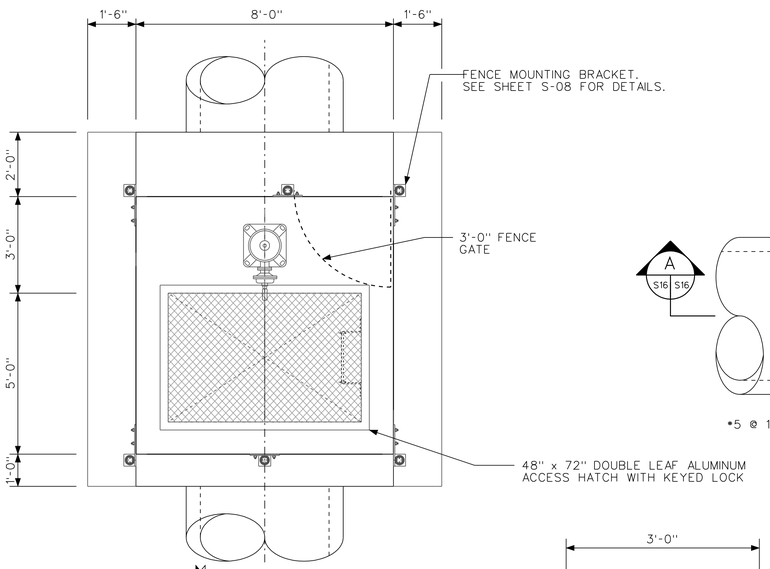

PLAN
SCALE: 1/2" = 1'-0"

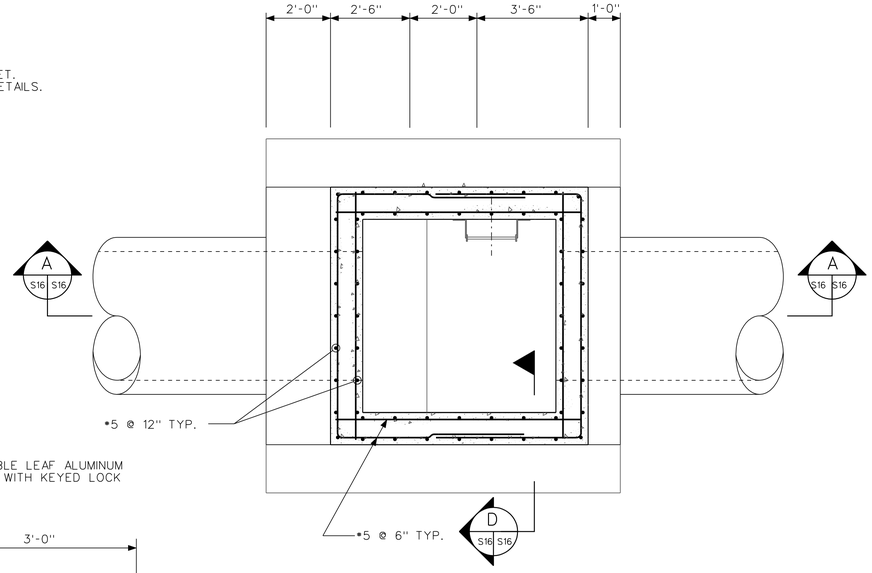

SECTION B
SCALE: 1/2" = 1'-0"

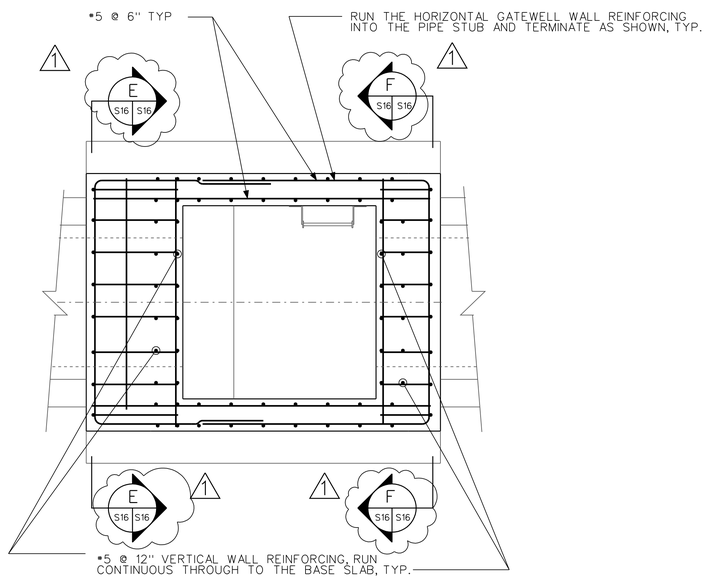

SECTION C
SCALE: 1/2" = 1'-0"

NOTES:

1. SEE SHEET M-1 FOR SLUICE GATE DETAILS.
2. SEE SHEET C-49 FOR GATEWELL PROFILE.
3. SEE SHEET S-47 FOR FENCE DETAILS.

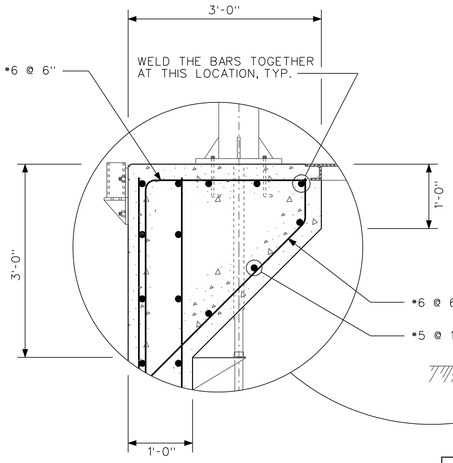

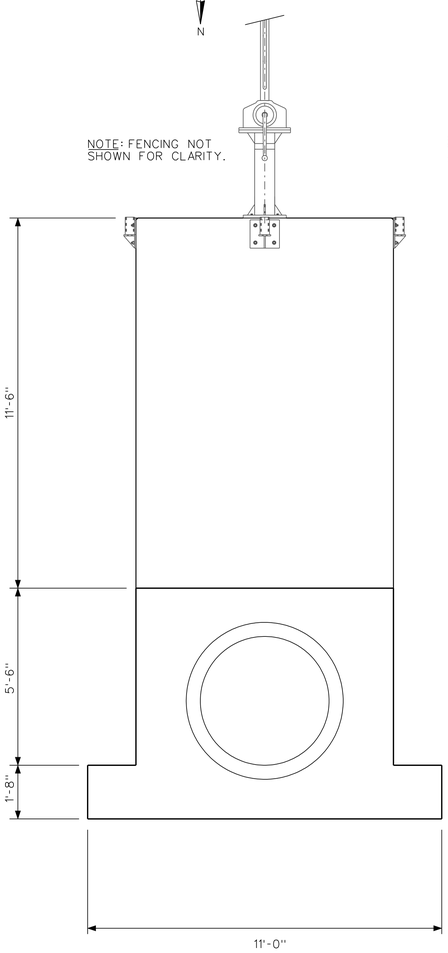

ELEVATION
SCALE: 1/2" = 1'-0"

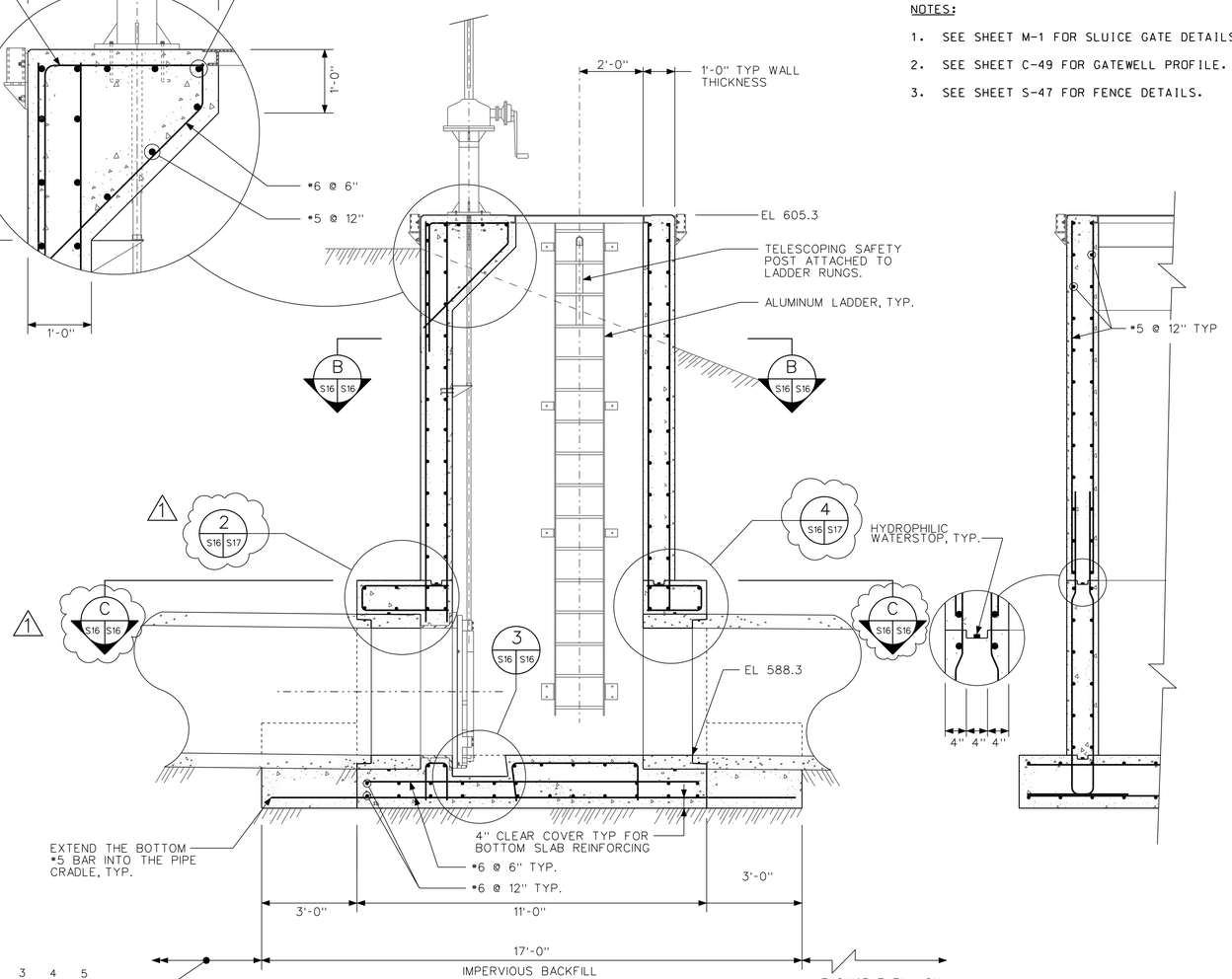

SECTION A
SCALE: 1/2" = 1'-0"

SECTION D
SCALE: 1/2" = 1'-0"

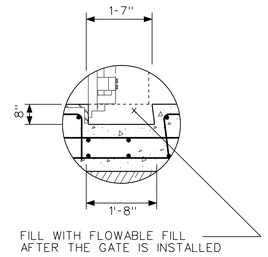

DETAIL 3
NTS

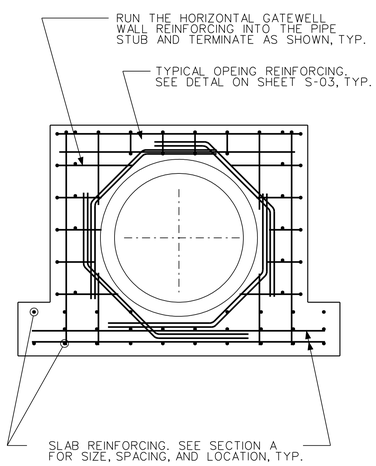

SECTION E F
SCALE: 1/2" = 1'-0"

SCALE: 1/2" = 1'-0"

US Army Corps of Engineers
Chicago District

SYMBOL	SHEET REFERENCE CORRECTED, ADDED AMENDMENT DESCRIPTION	DATE APPROVED	SYMBOL	DESCRIPTION	DATE APPROVED
1					

DESIGNED BY: EGS
DRAWN BY: EGS
CHECKED BY: JJS
SUBMITTED BY: STEVE TREHARNE
DATE: AUGUST 2007
SCALE: AS SHOWN
SOLICITATION NUMBER: W912P6-07-B-0006
DATE:

U.S. ARMY ENGINEER DISTRICT
CORPS OF ENGINEERS
CHICAGO, ILLINOIS

LITTLE CALUMET RIVER, INDIANA
LOCAL FLOOD PROTECTION
STAGE V, PHASE 2
TRI-STATE 48" GATEWELL
PLAN, ELEVATION AND SECTIONS

SHEET REFERENCE NUMBER:
S-16
SHEET 92 OF 138

PLOT DATE: 8/24/2007
FILENAME: D:\working\sma25162\LRC52-S16A001.dgn

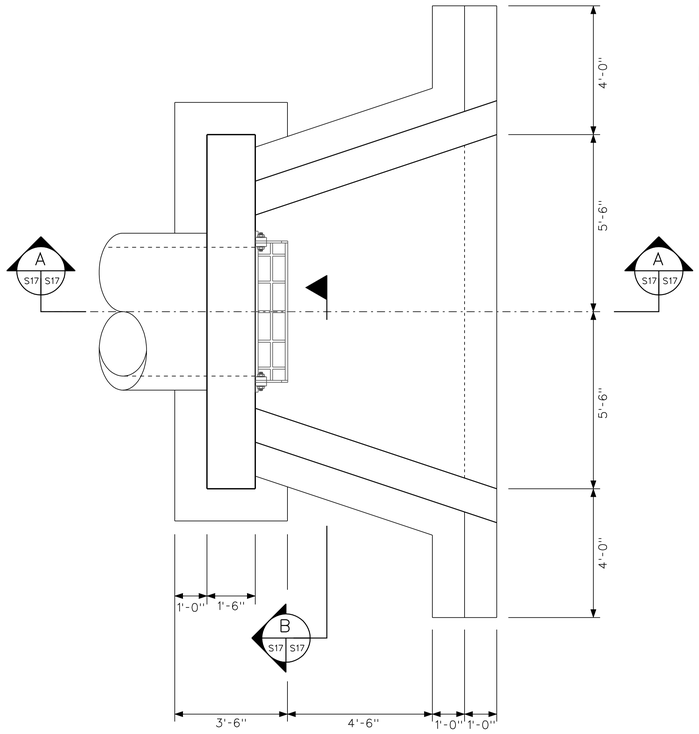

NOTE: PLAN DIMENSIONS ARE THE SAME FOR BOTH THE INLET AND OUTLET HEADWALLS.

PLAN
SCALE: ½" = 1'-0"

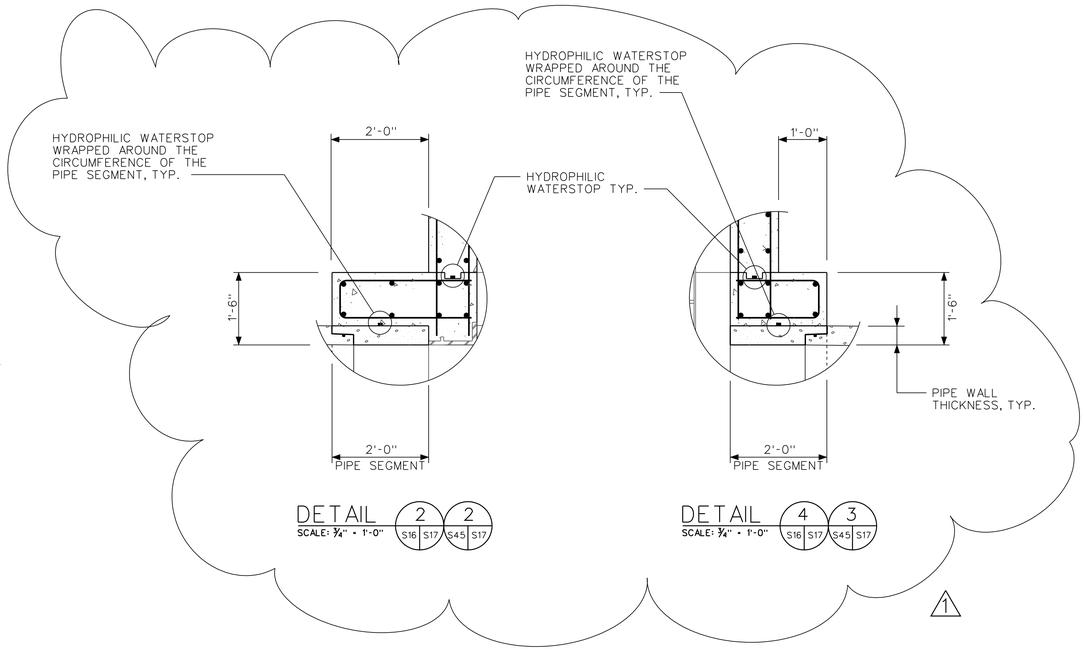

NOTES:

1. SEE SHEET M-1 FOR FLAP GATE DETAILS.

1

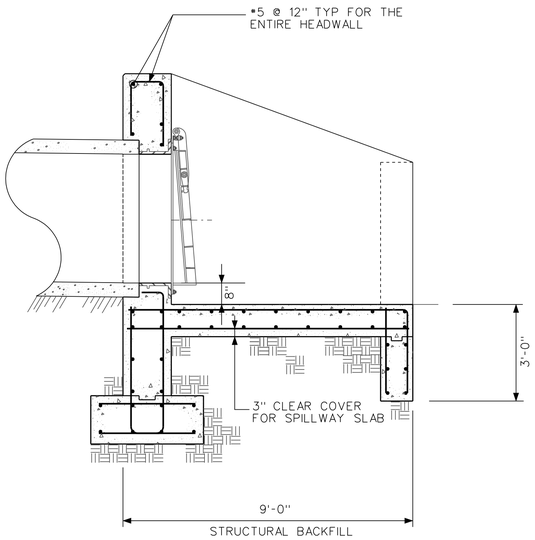

SECTION A
SCALE: ½" = 1'-0"
S17 S17

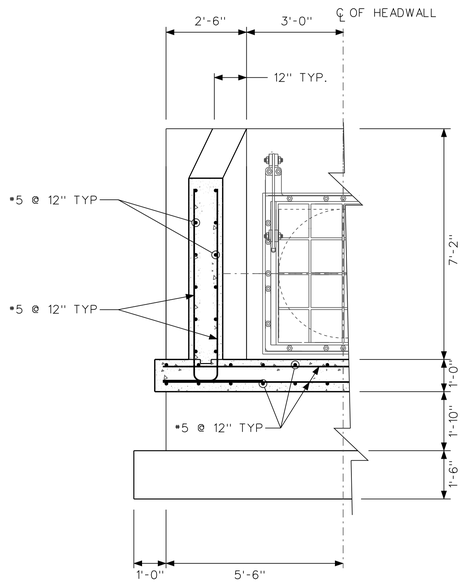

SECTION B
SCALE: ½" = 1'-0"
S17 S17

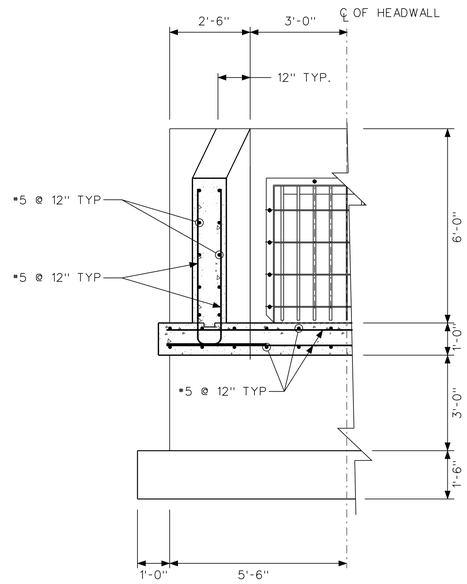

SECTION B
SCALE: ½" = 1'-0"
S17 S17

SCALE: ½" = 1'-0"

US Army Corps of Engineers
Chicago District

SYMBOL	DETAILS AND NOTES UPDATED, DELETED AMENDMENT DESCRIPTION	DATE	APPROVED	SYMBOL	DESCRIPTION	DATE	APPROVED
1							

DESIGNED BY: EGS
DRAWN BY: EGS
CHECKED BY: JJS
SUBMITTED BY: STEVE TREHARNE
DATE: AUGUST 2007
SCALE: AS SHOWN
SOLICITATION NUMBER: W912P6-07-B0006
DATE:

U.S. ARMY ENGINEER DISTRICT
CORPS OF ENGINEERS
CHICAGO, ILLINOIS

LITTLE CALUMET RIVER, INDIANA
LOCAL FLOOD PROTECTION
STAGE V, PHASE 2
48" GATEWELL HEADWALLS AND MISCELLANEOUS GATEWELL DETAILS

SHEET REFERENCE NUMBER:
S-17
SHEET 93 OF 138

PLOT DATE: 8/24/2007
FILENAME: D:\working\sms25162\LRC52-S17A001.dgn

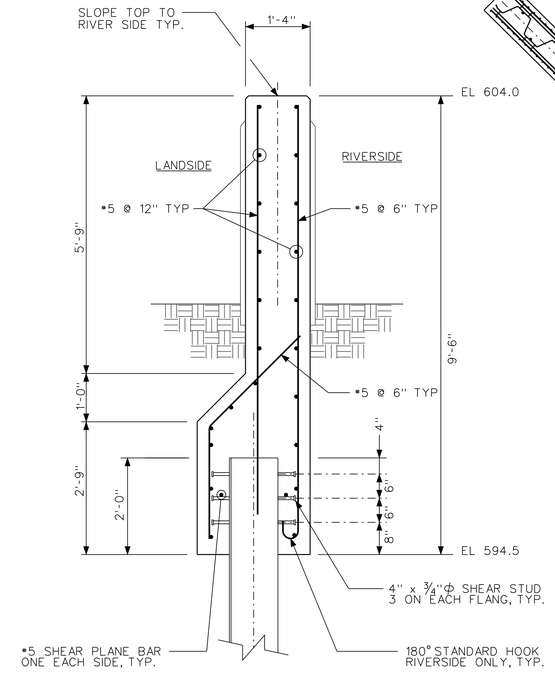

SECTION C D
SCALE: ¾" = 1'-0"

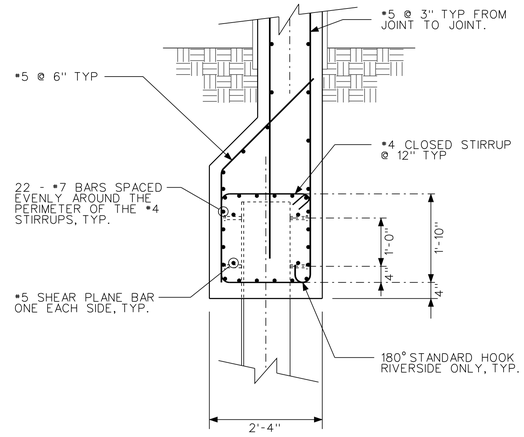

SECTION B
SCALE: ¾" = 1'-0"

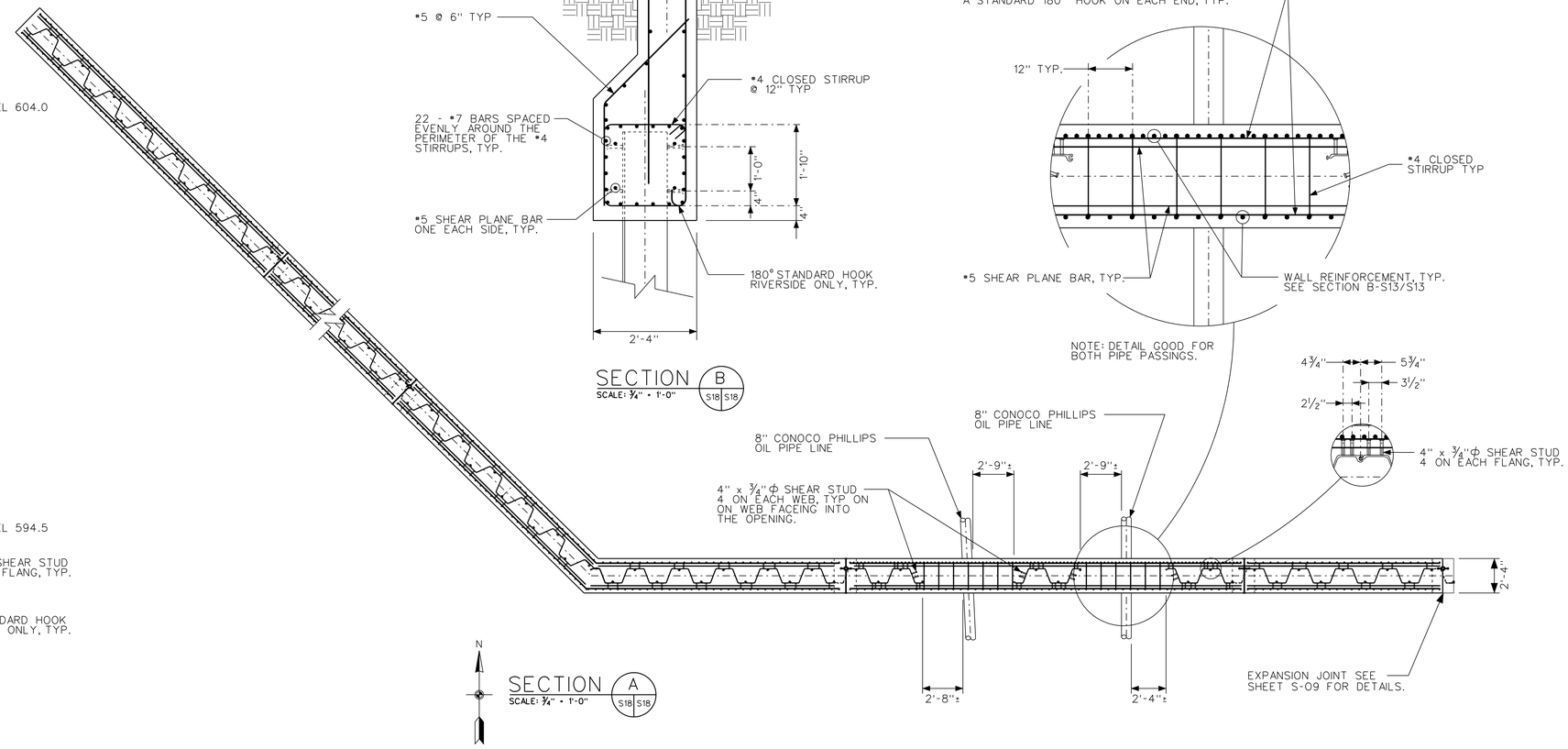

SECTION A
SCALE: ¾" = 1'-0"

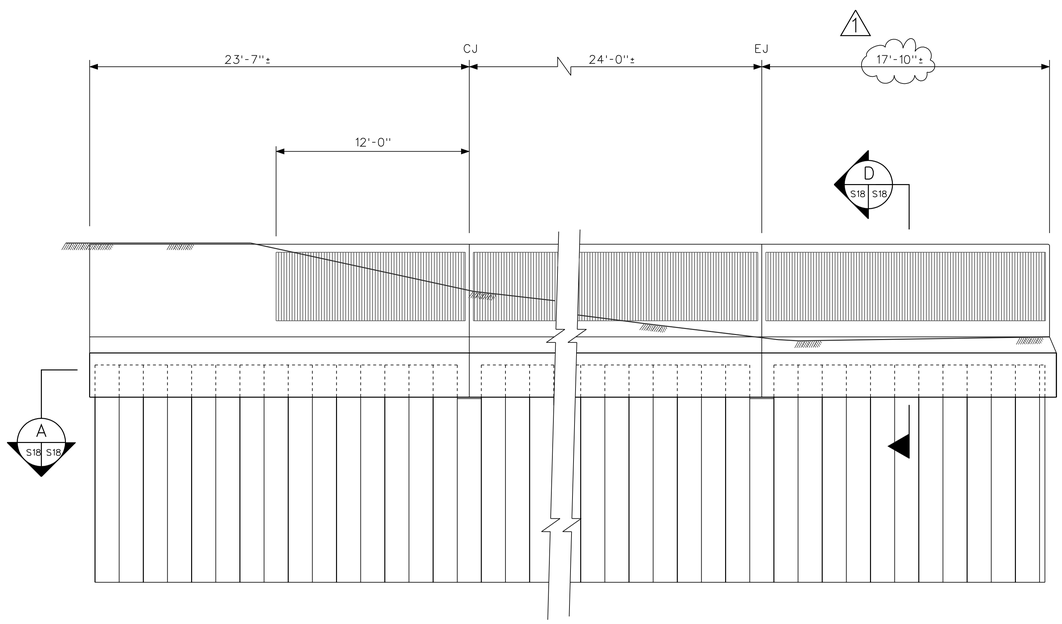

NORTHEAST ELEVATION
SCALE: ¼" = 1'-0"

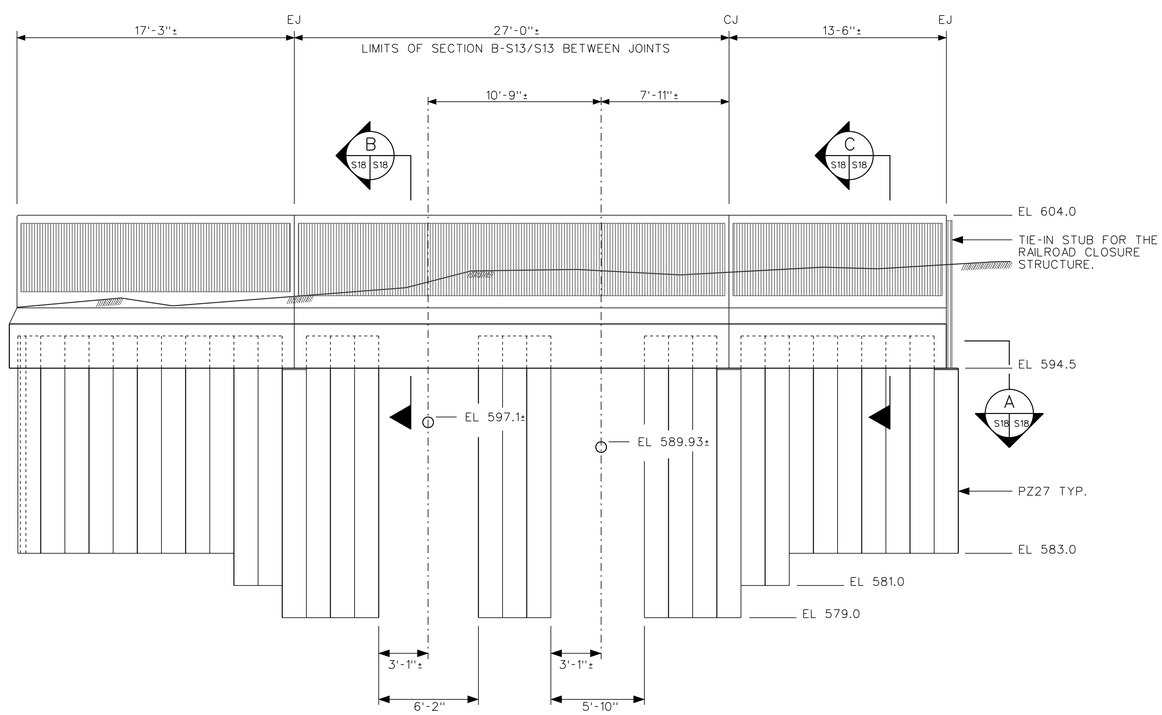

NORTH ELEVATION
SCALE: ¼" = 1'-0"

US Army Corps of Engineers
Chicago District

SYMBOL	DIMENSION ADDED AMENDMENT DESCRIPTION	DATE APPROVED	SYMBOL	DESCRIPTION	DATE APPROVED

DESIGNED BY: EGS
DRAWN BY: EGS
CHECKED BY: JJS
SUBMITTED BY: STEVE TREHARNE
DATE: AUGUST 2007
SCALE: AS SHOWN
SOLICITATION NUMBER: W912P6-07-B-0006
DATE:

U.S. ARMY ENGINEER DISTRICT
CORPS OF ENGINEERS
CHICAGO, ILLINOIS

LITTLE CALUMET RIVER, INDIANA
LOCAL FLOOD PROTECTION
STAGE V, PHASE 2
UTILITY CORRIDOR
SOUTHWEST SIDE
PLAN, ELEVATION AND SECTION

SHEET REFERENCE NUMBER:
S-18
SHEET 94 OF 138

PLOT DATE: 8/24/2007
FILENAME: D:\working\dma25162\LRC52-S18\M01.dgn

NOTES:

1. SEE SHEET S-25 FOR PIPELINE NOTES.

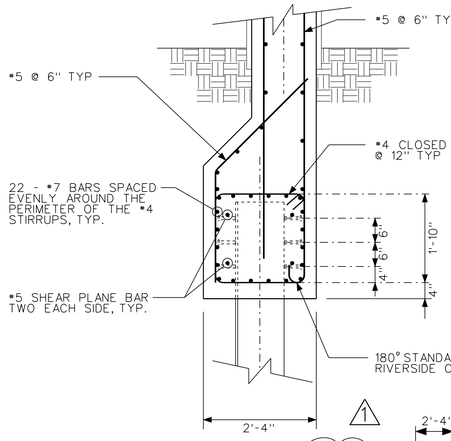

SECTION D D F
SCALE: ¾" = 1'-0"
S19 S19 S20 S19 S20 S19

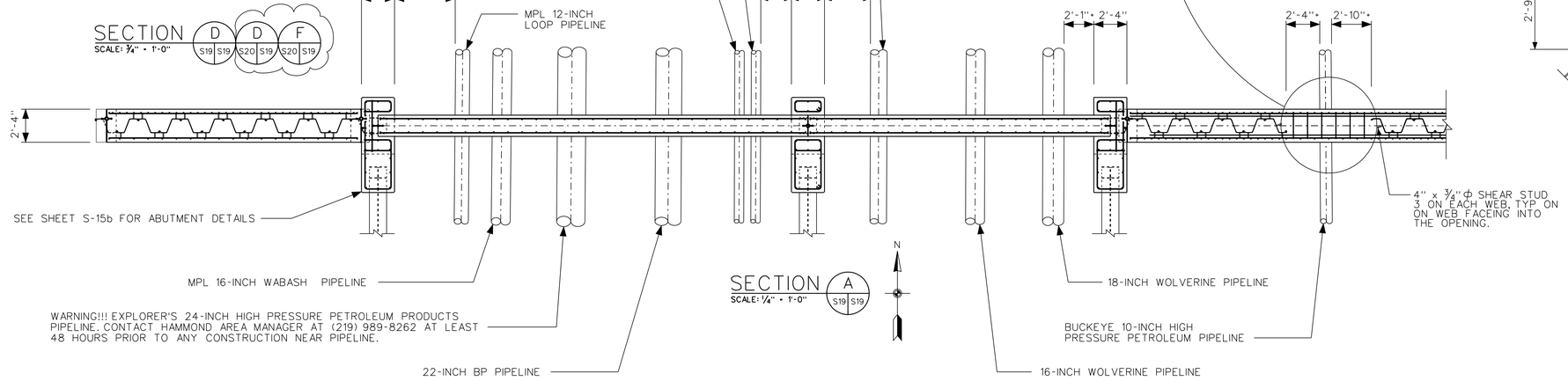

SECTION A
SCALE: ¼" = 1'-0"
S19 S19

N

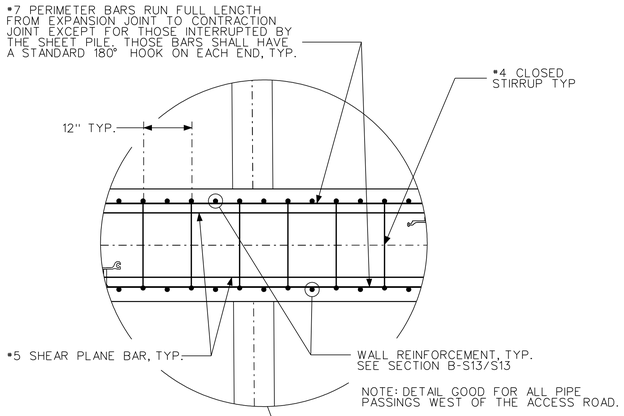

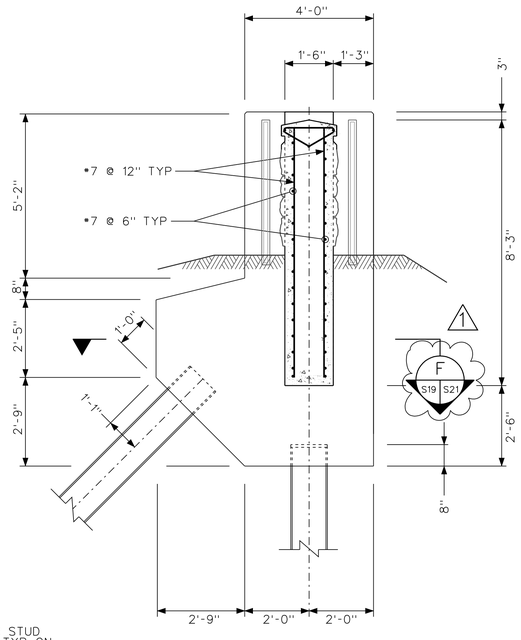

NOTE: ALL COVER 3" UNLESS OTHERWISE NOTED.

SECTION C
SCALE: ½" = 1'-0"
S19 S19

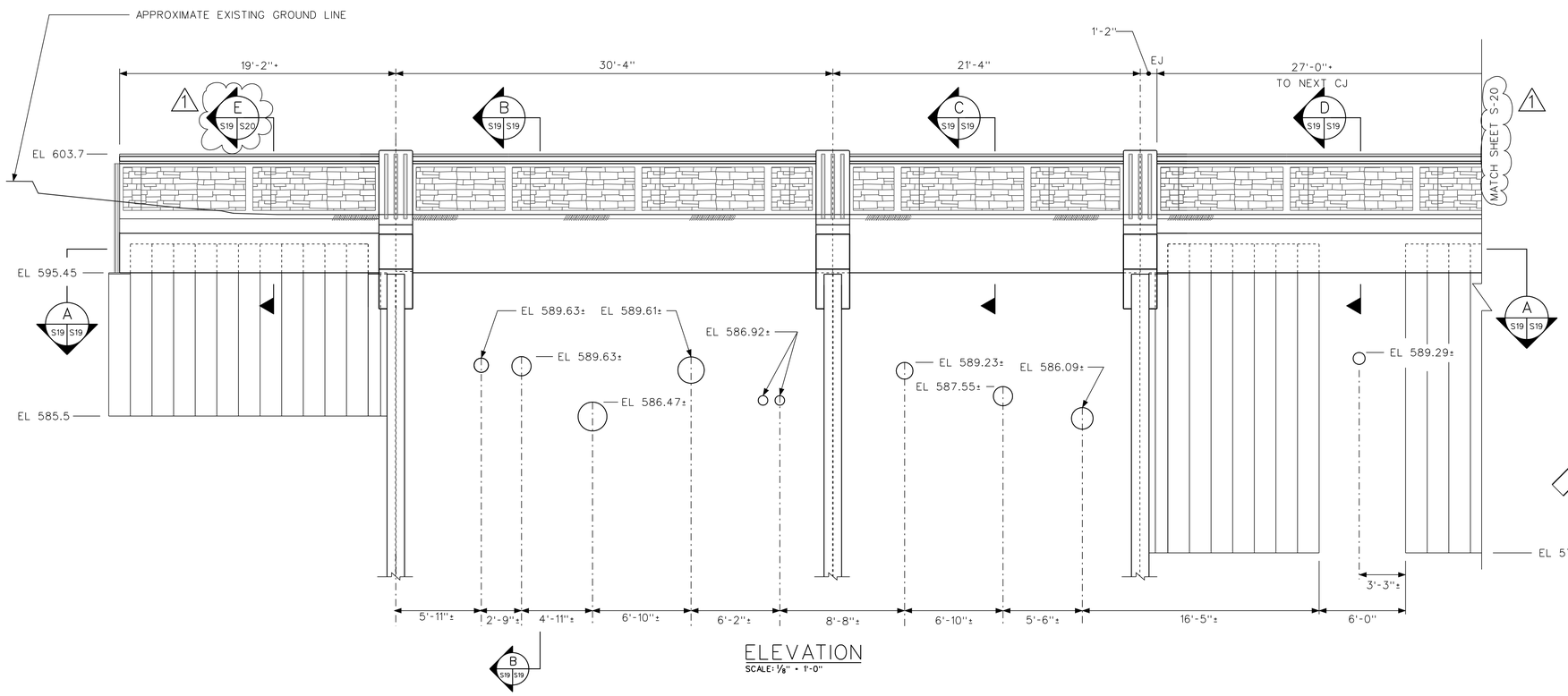

ELEVATION
SCALE: 1/8" = 1'-0"

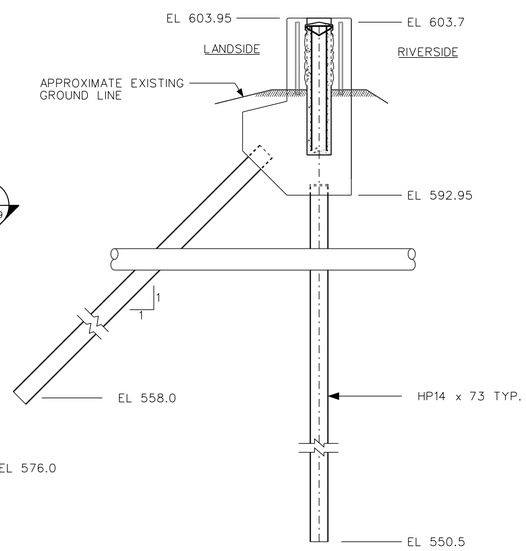

SECTION B
SCALE: ¼" = 1'-0"
S19 S19

US Army Corps of Engineers
Chicago District

SYMBOL	SHEET REFERENCES AMENDMENT DESCRIPTION	DATE APPROVED	SYMBOL	DESCRIPTION	DATE APPROVED

DESIGNED BY: EGS
DATE: AUGUST 2007
DRAWN BY: EGS
SCALE: AS SHOWN
CHECKED BY: JJS
SOLICITATION NUMBER: W912P6-07-B-0006
SUBMITTED BY: STEVE TREHARNE
DATE:

U.S. ARMY ENGINEER DISTRICT
CORPS OF ENGINEERS
CHICAGO, ILLINOIS

LITTLE CALUMET RIVER, INDIANA
LOCAL FLOOD PROTECTION
STAGE V, PHASE 2

UTILITY CORRIDOR SOUTHEAST
SIDE ELEVATION AND SECTIONS

SHEET REFERENCE NUMBER:
S-19

SHEET 95 OF 138

PLOT DATE: 8/24/2007
FILENAME: D:\working\sm25162\LRC52-S19A001.dgn

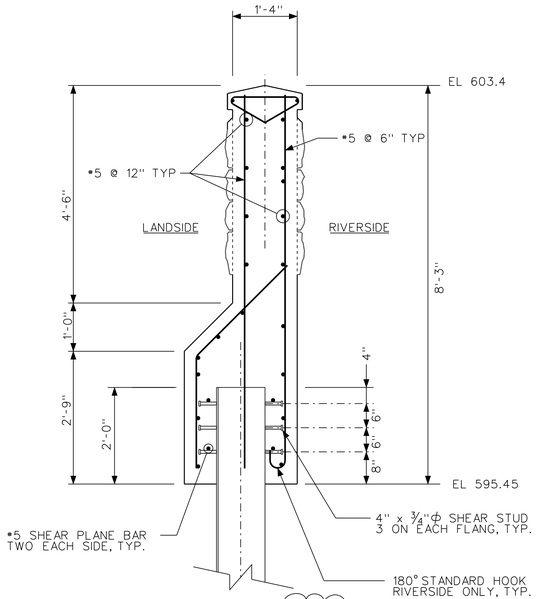

SECTION E (S19 S20)
SCALE: 3/4" = 1'-0"

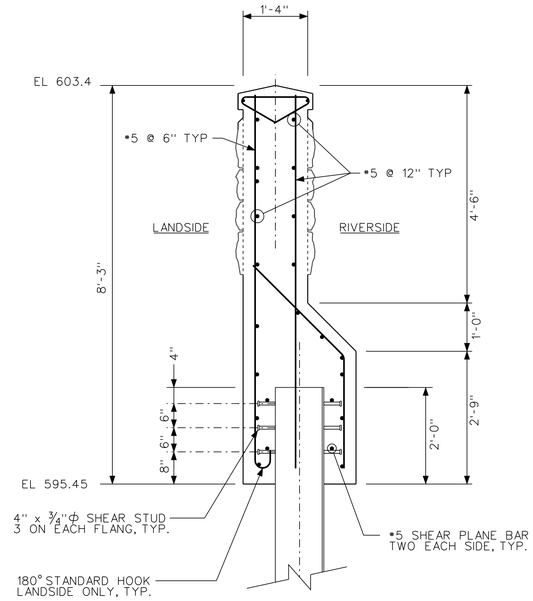

SECTION B (S20 S20)
SCALE: 3/4" = 1'-0"

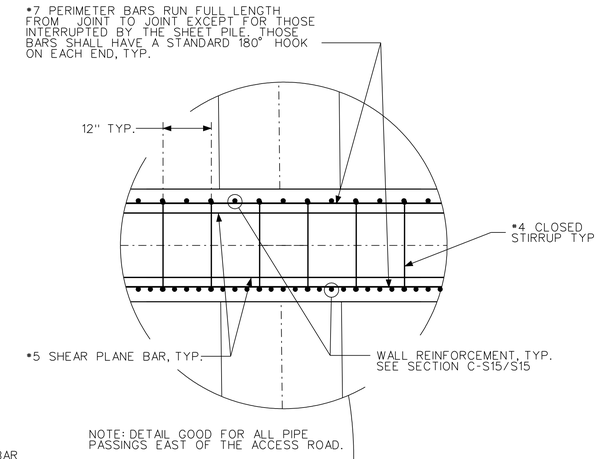

NOTE: DETAIL GOOD FOR ALL PIPE PASSINGS EAST OF THE ACCESS ROAD.

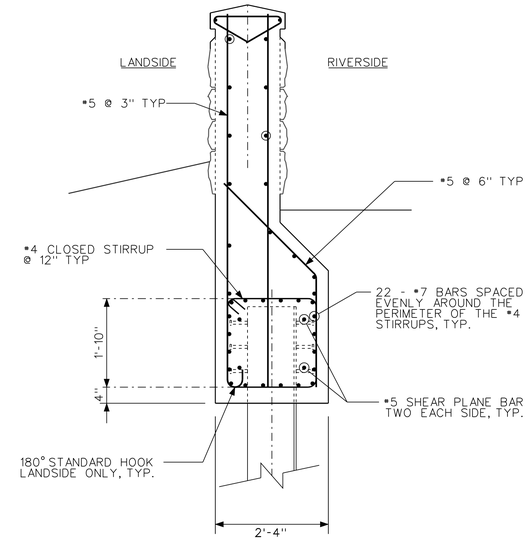

SECTION C (S20 S20)
SCALE: 3/4" = 1'-0"

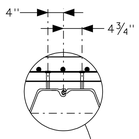

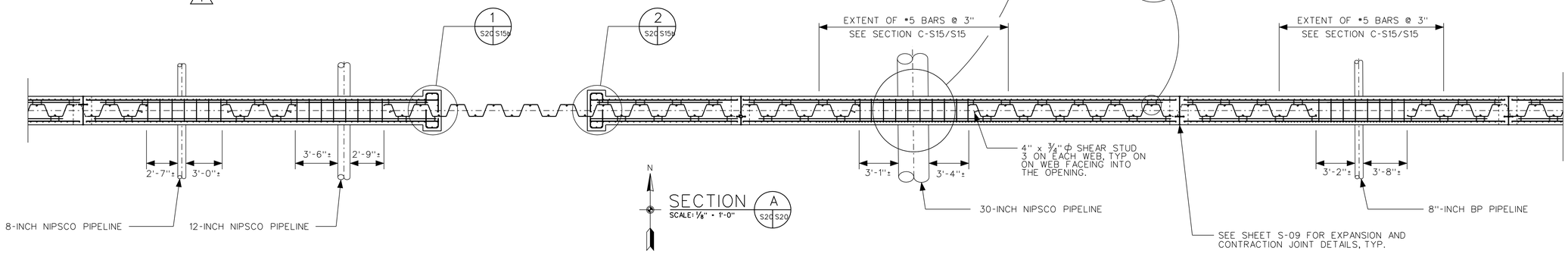

SECTION A (S20 S20)
SCALE: 1/8" = 1'-0"

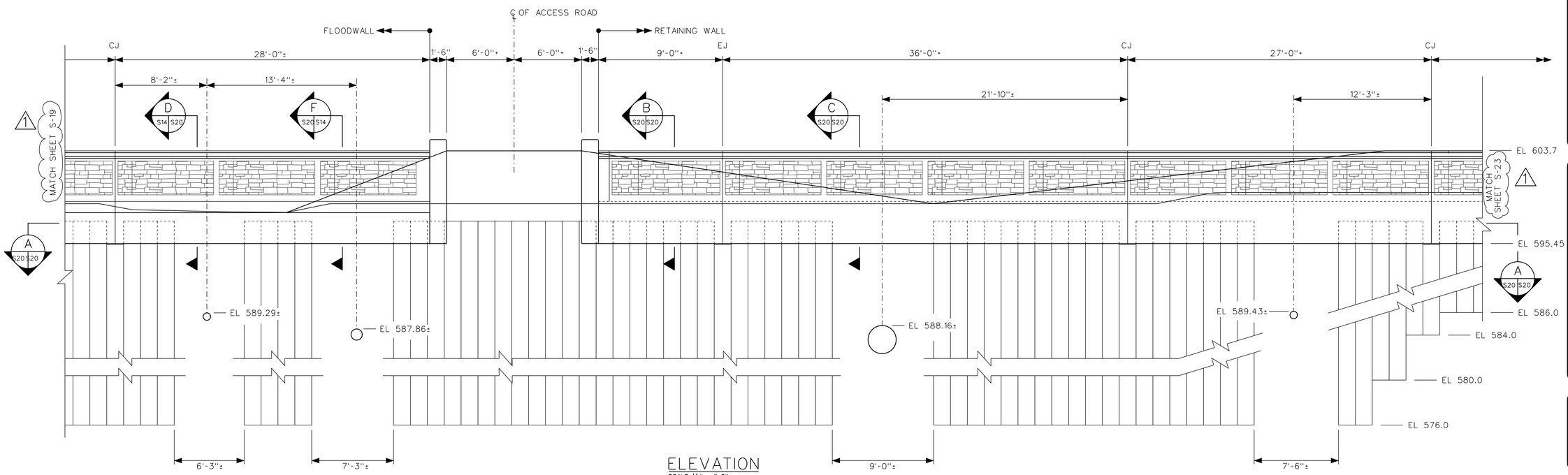

ELEVATION
SCALE: 1/8" = 1'-0"

US Army Corps of Engineers
Chicago District

SYMBOL	SHEET REFERENCES CORRECTIONS AMENDMENT DESCRIPTION	DATE APPROVED	SYMBOL	DESCRIPTION	DATE APPROVED

DESIGNED BY: EGS
DATE: AUGUST 2007
DRAWN BY: EGS
SCALE: AS SHOWN
CHECKED BY: JJS
SOLICITATION NUMBER: W912P6-07-B-0006
SUBMITTED BY: STEVE TREHARNE
DATE:

U.S. ARMY ENGINEER DISTRICT
CORPS OF ENGINEERS
CHICAGO, ILLINOIS

LITTLE CALUMET RIVER, INDIANA
LOCAL FLOOD PROTECTION
STAGE V, PHASE 2
UTILITY CORRIDOR SOUTHEAST
SIDE WALL PLAN, ELEVATION
AND SECTIONS SHEET 2

SHEET REFERENCE NUMBER:
S-20
SHEET 96 OF 138

PLOT DATE: 8/24/2007
FILENAME: D:\working\ams25162\LRC52-S20AM01.dgn

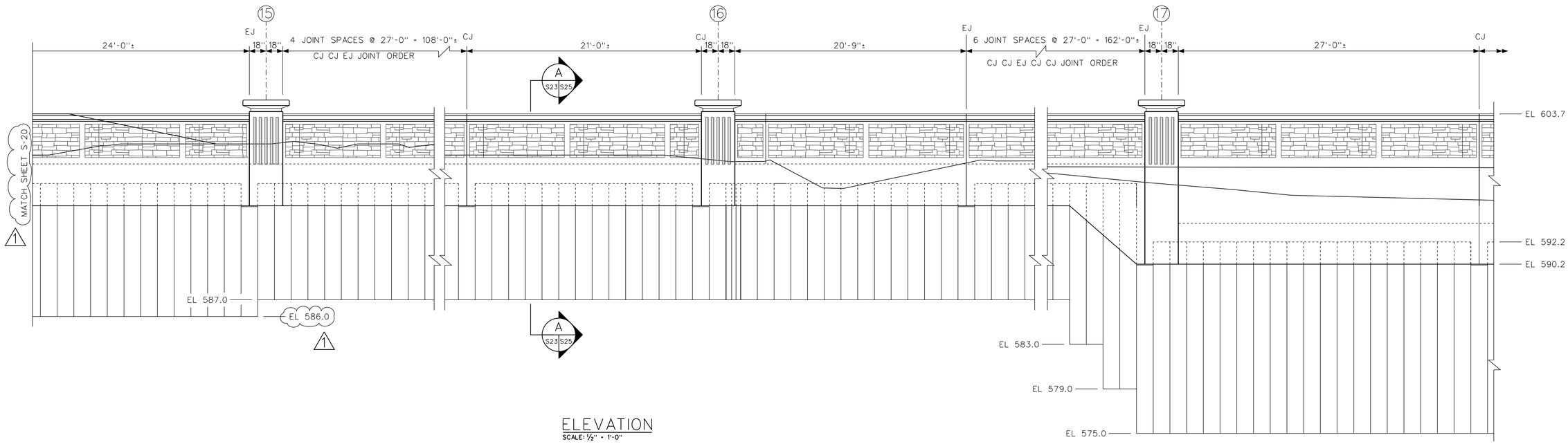

ELEVATION
SCALE: 1/2" = 1'-0"

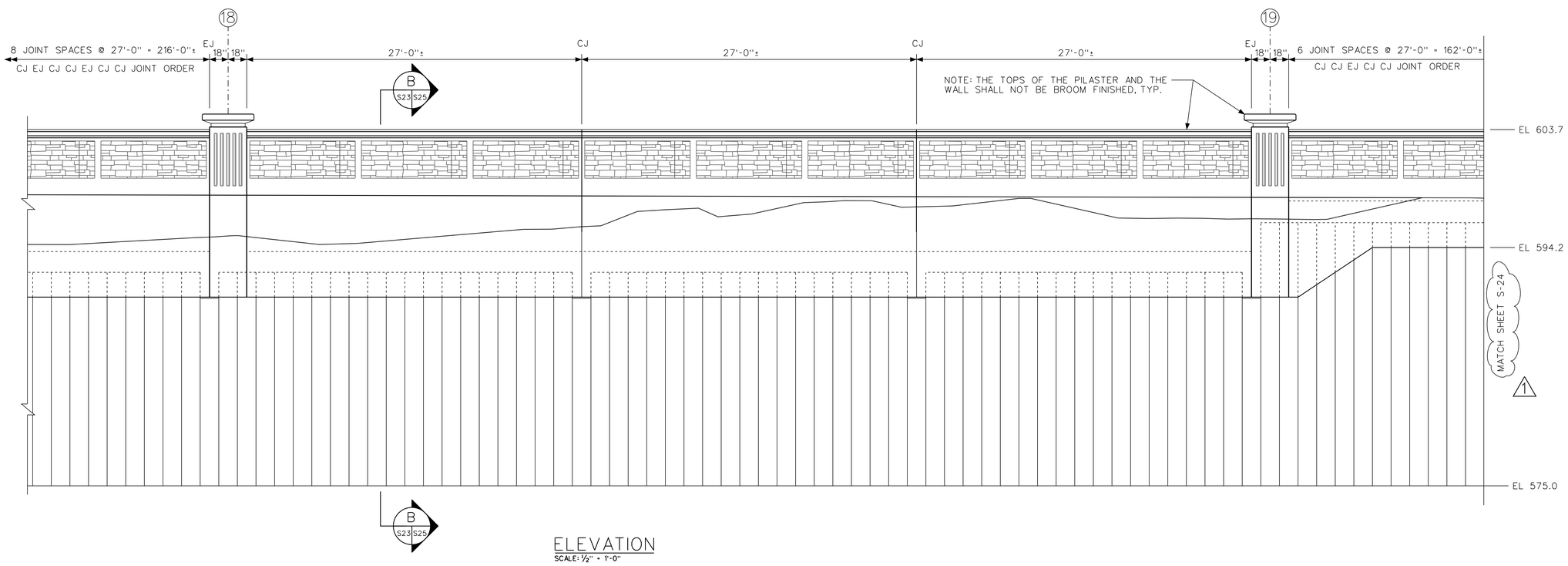

ELEVATION
SCALE: 1/2" = 1'-0"

US Army Corps of Engineers
Chicago District

SYMBOL	SHEET REFERENCE, ELEVATION CORRECTED AMENDMENT DESCRIPTION	DATE APPROVED	SYMBOL	DESCRIPTION	DATE APPROVED
1					

DESIGNED BY: EGS
DRAWN BY: EGS
CHECKED BY: JJS
SUBMITTED BY: STEVE TREHARNE
DATE: AUGUST 2007
SCALE: AS SHOWN
SOLICITATION NUMBER: W912P6-07-B0006
DATE:

U.S. ARMY ENGINEER DISTRICT
CORPS OF ENGINEERS
CHICAGO, ILLINOIS

LITTLE CALUMET RIVER, INDIANA
LOCAL FLOOD PROTECTION
STAGE V, PHASE 2

NORTH DRIVE I-WALL
ELEVATIONS

SHEET REFERENCE NUMBER:
S-23

SHEET 99 OF 138

PLOT DATE: 8/24/2007
FILENAME: D:\working\sm25162\LRC52-S23MD01.dgn

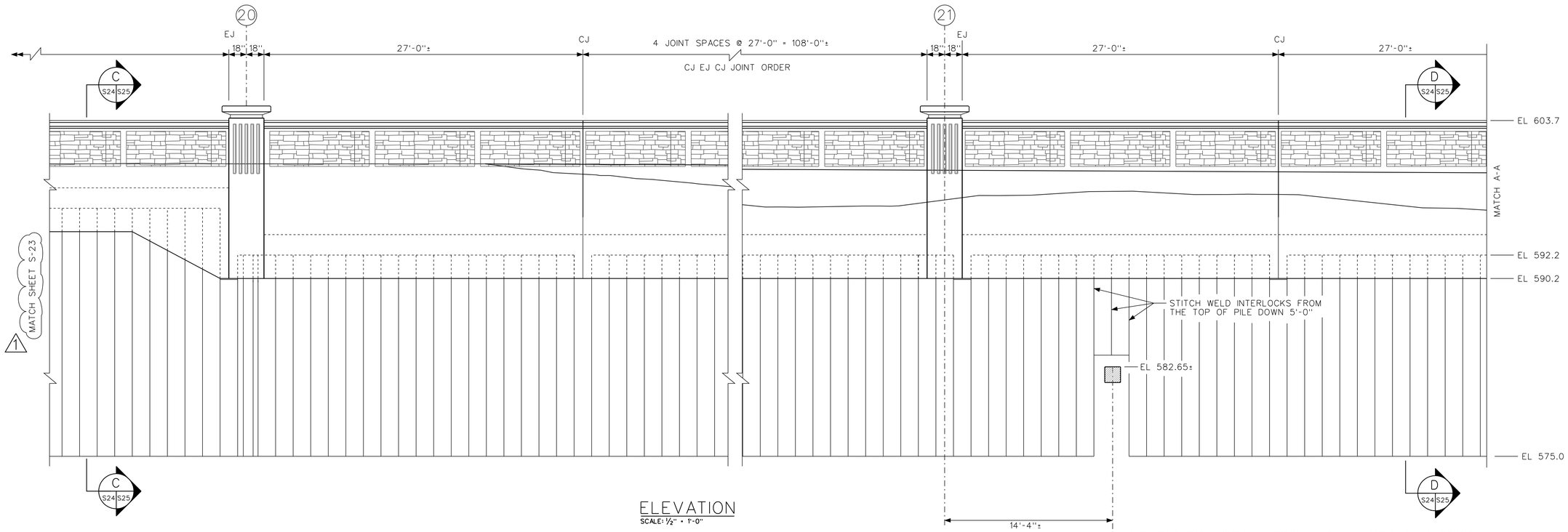

ELEVATION
SCALE: 1/2" = 1'-0"

℄ AMERITECH 9 DUCT CONCRETE CONDUIT. EXCAVATE DOWN TO THE CONDUIT TO FIELD VERIFY THE LOCATION PRIOR TO DRIVING SHEET PILE IN THIS LOCATION. DRIVE THE PILE ON EITHER SIDE, SET THE TWO PILE SECTIONS OVER THE PIPE DOWN TO 1'-0" ABOVE THE CONDUIT AND STITCH WELD IN PLACE. BACKFILL THE EXCAVATION WITH IMPERVIOUS FILL.

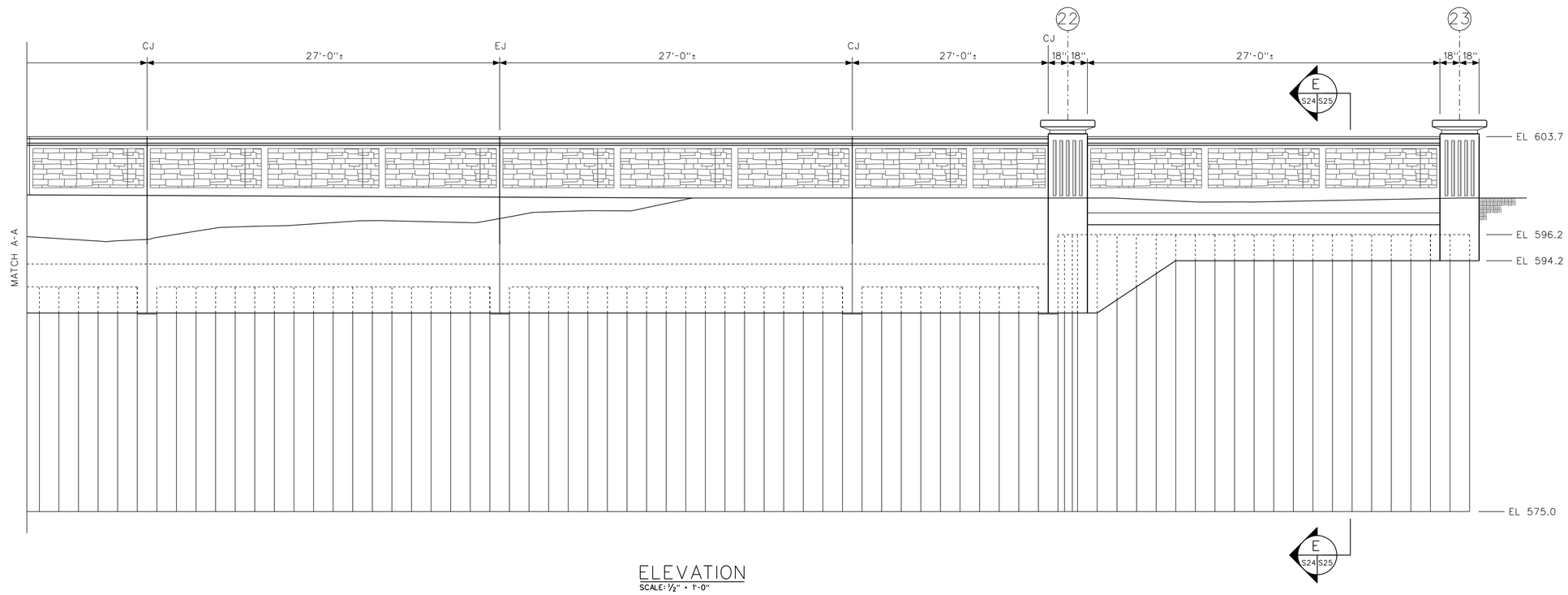

ELEVATION
SCALE: 1/2" = 1'-0"

US Army Corps of Engineers
Chicago District

SYMBOL	SHEET REFERENCES CORRECTIONS AMENDMENT DESCRIPTION	DATE APPROVED	SYMBOL	DESCRIPTION	DATE APPROVED

DESIGNED BY: EGS
DRAWN BY: EGS
CHECKED BY: JJS
SUBMITTED BY: STEVE TREHARNE
DATE: AUGUST 2007
SCALE: AS SHOWN
SOLICITATION NUMBER: W912P6-07-B0006
DATE:

U.S. ARMY ENGINEER DISTRICT
CORPS OF ENGINEERS
CHICAGO, ILLINOIS

LITTLE CALUMET RIVER, INDIANA
LOCAL FLOOD PROTECTION
STAGE V, PHASE 2

NORTH DRIVE I-WALL
ELEVATIONS SHEET #2

SHEET REFERENCE NUMBER:
S-24
SHEET 100 OF 138

PLOT DATE: 8/24/2007
FILENAME: D:\working\sm25152\LRC52-S24AMD1.dgn

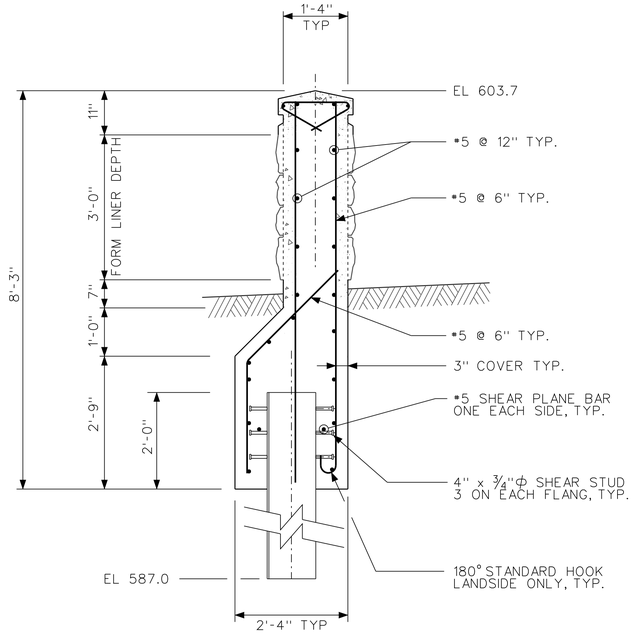

SECTION A
SCALE: ½" = 1'-0"
S23 S25

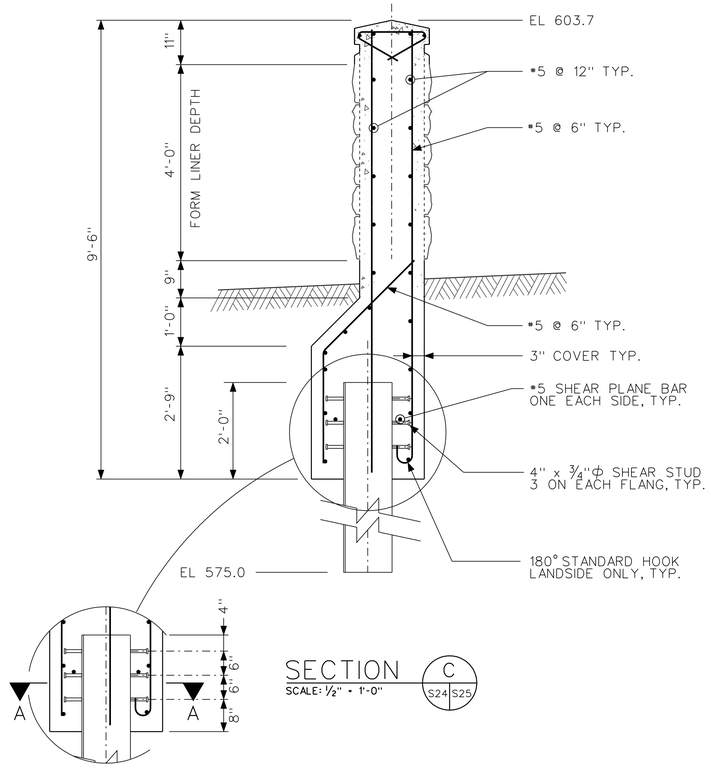

SECTION C
SCALE: ½" = 1'-0"
S24 S25

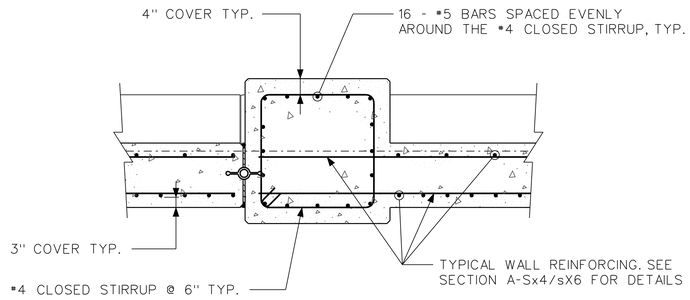

SECTION F
SCALE: ½" = 1'-0"
S25 S25

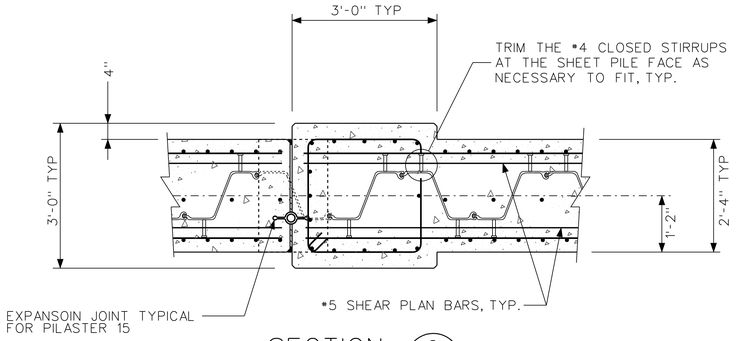

SECTION G
SCALE: ½" = 1'-0"
S25 S25

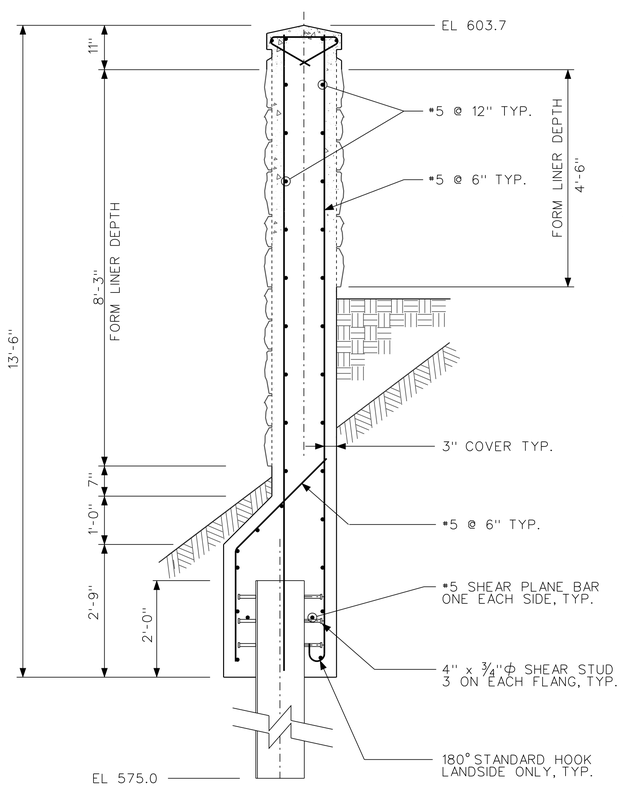

1

SECTION B
SCALE: ½" = 1'-0"
S23 S25

SECTION D
S24 S25

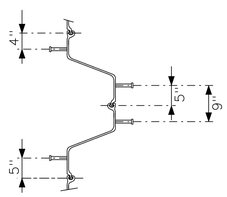

TYPICAL STUD LAYOUT FOR THE NORTH DRIVE WALL

SECTION A-A

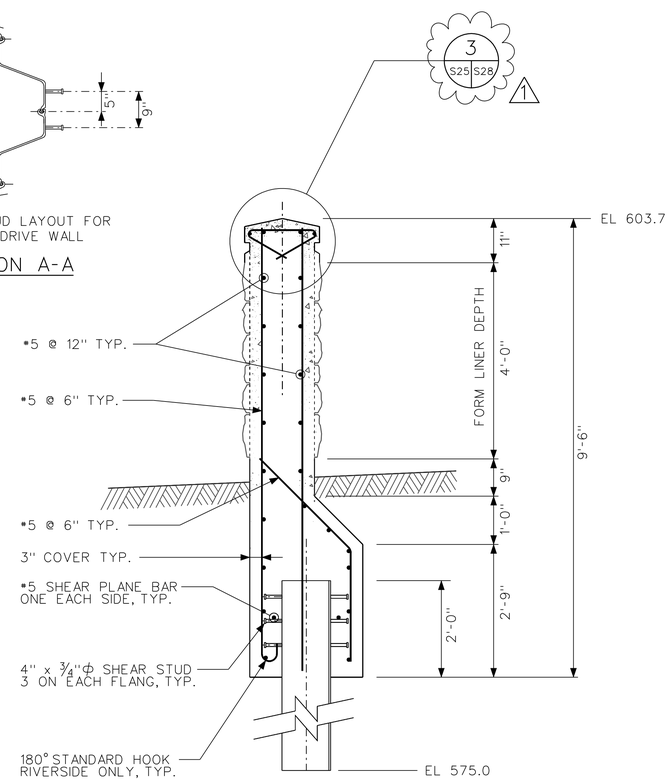

SECTION E
SCALE: ½" = 1'-0"
S24 S25

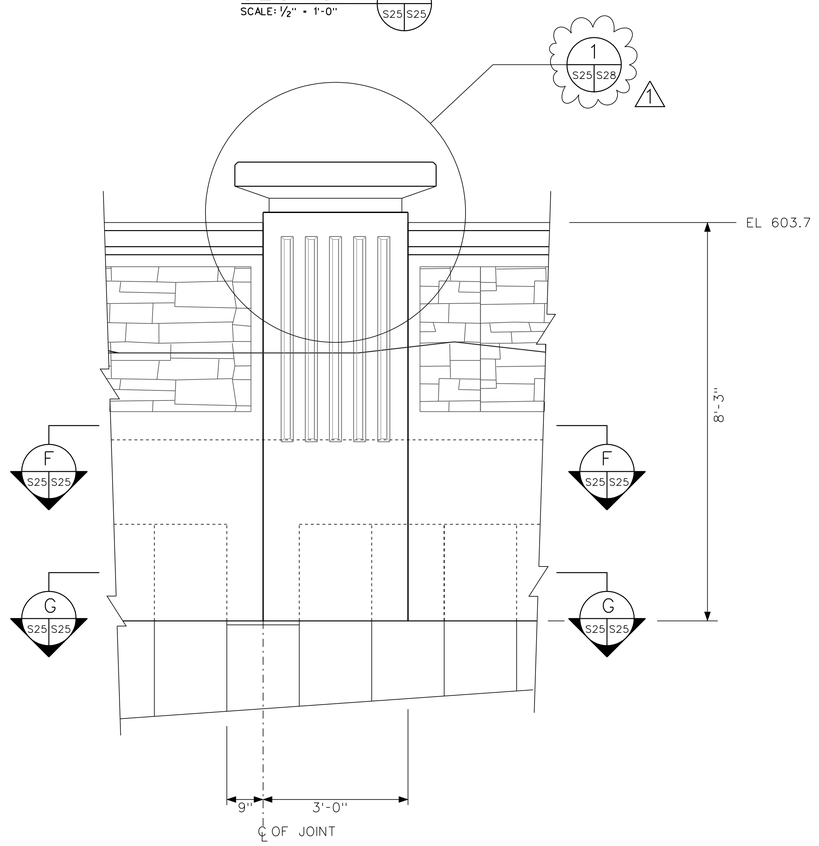

PILASTER 15 ELEVATION
SCALE: ¾" = 1'-0"

US Army Corps of Engineers
Chicago District

SYMBOL	SHEET REFERENCES CORRECTIONS AMENDMENT DESCRIPTION	DATE APPROVED SYMBOL	DESCRIPTION	DATE APPROVED

DESIGNED BY: EGS
DATE: AUGUST 2007
DRAWN BY: EGS
SCALE: AS SHOWN
CHECKED BY: JJS
SOLICITATION NUMBER: W912P8-07-B-0006
SUBMITTED BY: STEVE TREHARNE
DATE:

U.S. ARMY ENGINEER DISTRICT
CORPS OF ENGINEERS
CHICAGO, ILLINOIS

LITTLE CALUMET RIVER, INDIANA
LOCAL FLOOD PROTECTION
STAGE V, PHASE 2

NORTH DRIVE I-WALL
SECTION AND DETAILS

SHEET REFERENCE NUMBER:
S-25
SHEET 101 OF 138

PLOT DATE: 8/24/2007
FILENAME: D:\working\sms25162\LRC52-S25-M01.dgn

NOTE: THE FORM FLUTING STRIP DEPTH ON THE RIVERSIDE OF THE PILASTER SHALL BE 8'-0" BETWEEN PILASTER 17 TO 19 AND BETWEEN PILASTERS 20 TO 21. ON ALL OTHER PILASTERS IT SHALL BE 4'-3". SEE SHEET S-x9 FOR DETAILS.

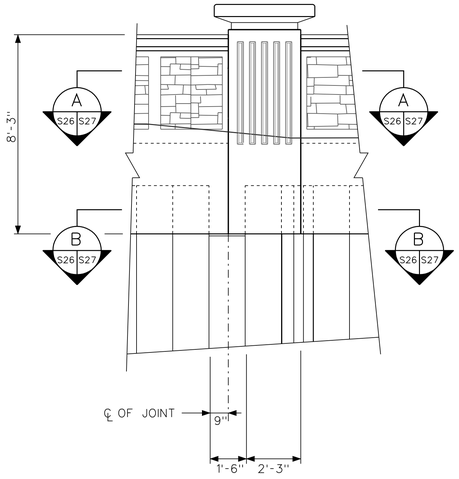

PILASTER 16 ELEVATION
SCALE: 3/8" = 1'-0"

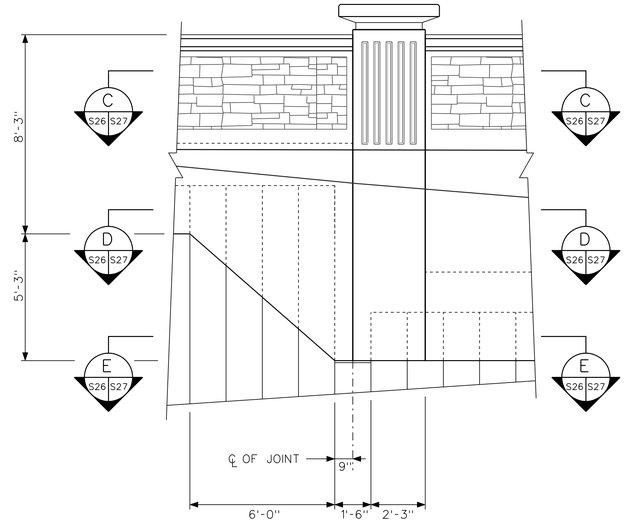

PILASTER 17 ELEVATION
SCALE: 3/8" = 1'-0"

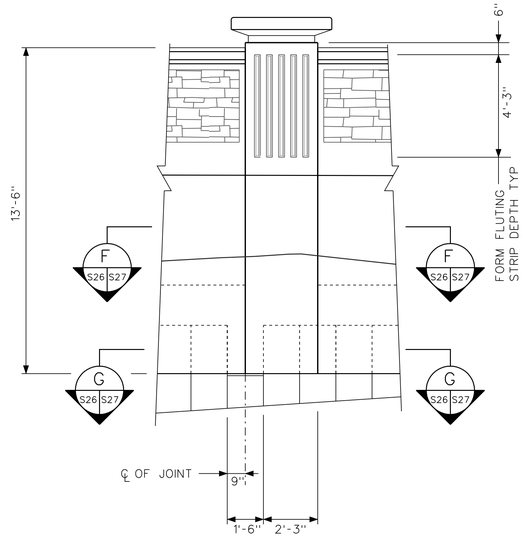

PILASTER 18 ELEVATION
SCALE: 3/8" = 1'-0"

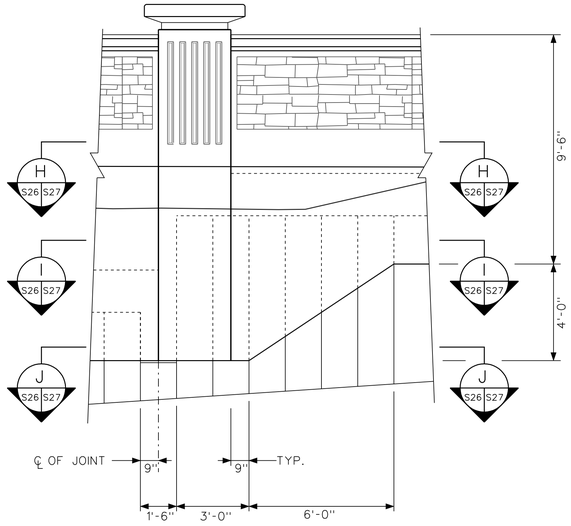

PILASTER 19 ELEVATION
SCALE: 3/8" = 1'-0"

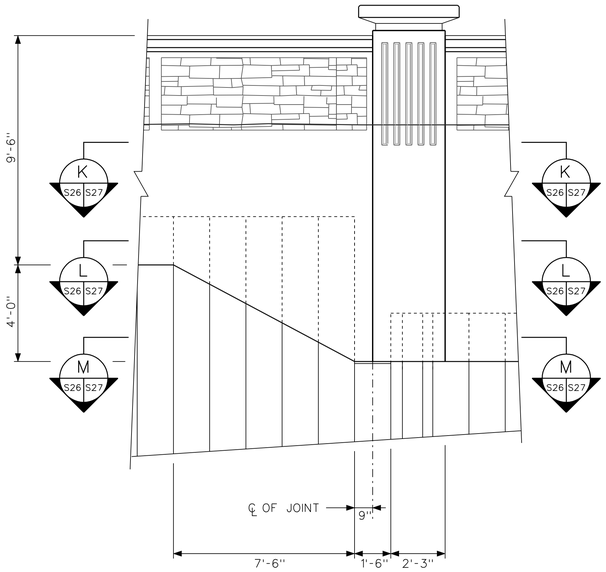

PILASTER 20 ELEVATION
SCALE: 3/8" = 1'-0"

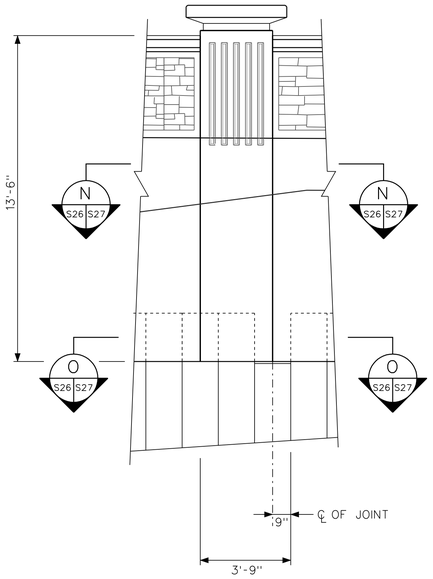

PILASTER 21 ELEVATION
SCALE: 3/8" = 1'-0"

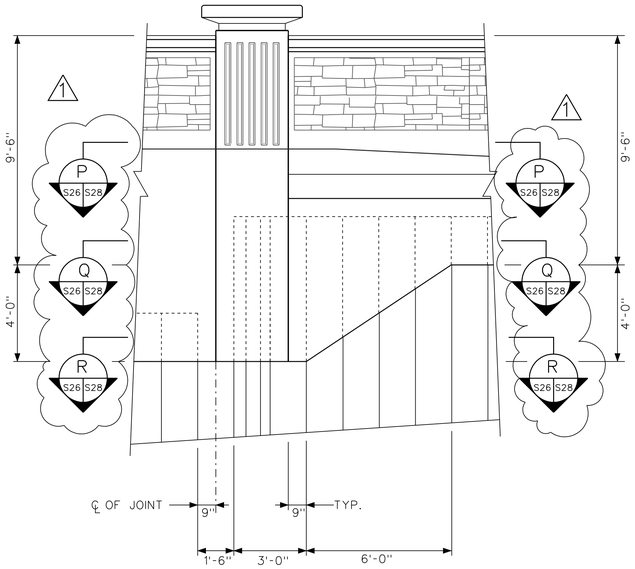

PILASTER 22 ELEVATION
SCALE: 3/8" = 1'-0"

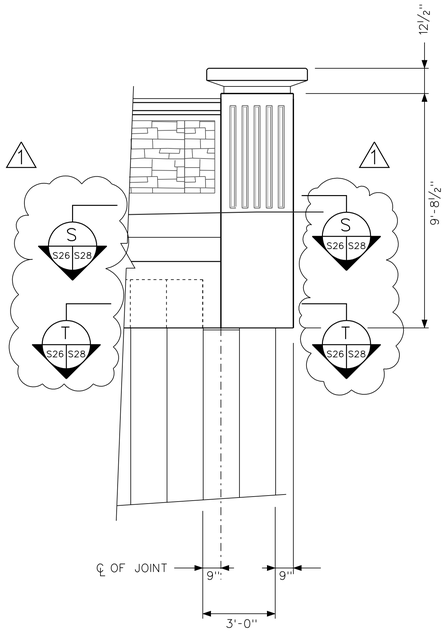

PILASTER 23 ELEVATION
SCALE: 3/8" = 1'-0"

US Army Corps of Engineers
Chicago District

SYMBOL	SHEET REFERENCES CORRECTIONS AMENDMENT DESCRIPTION	DATE APPROVED	SYMBOL	DESCRIPTION	DATE APPROVED

DESIGNED BY: EGS
DATE: AUGUST 2007
DRAWN BY: EGS
SCALE: AS SHOWN
CHECKED BY: JJS
SOLICITATION NUMBER: W912P8-07-B-0006
SUBMITTED BY: STEVE TREHARNE
DATE:

U.S. ARMY ENGINEER DISTRICT
CORPS OF ENGINEERS
CHICAGO, ILLINOIS

LITTLE CALUMET RIVER, INDIANA
LOCAL FLOOD PROTECTION
STAGE V, PHASE 2

NORTH DRIVE I-WALL
PILASTER ELEVATIONS

SHEET REFERENCE NUMBER:
S-26
SHEET 102 OF 138

PLOT DATE: 8/24/2007
FILENAME: D:\working\gms25162\LRC52-S26AND1.dgn

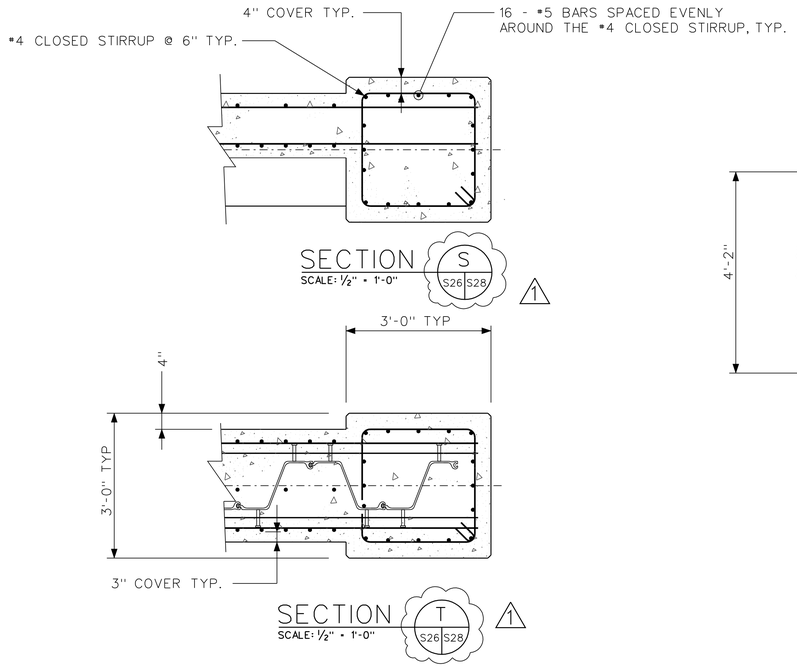

PILASTER 23 SECTIONS

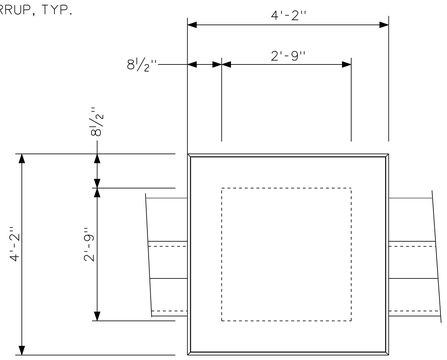

PILASTER PLAN
SCALE: 3/4" = 1'-0"

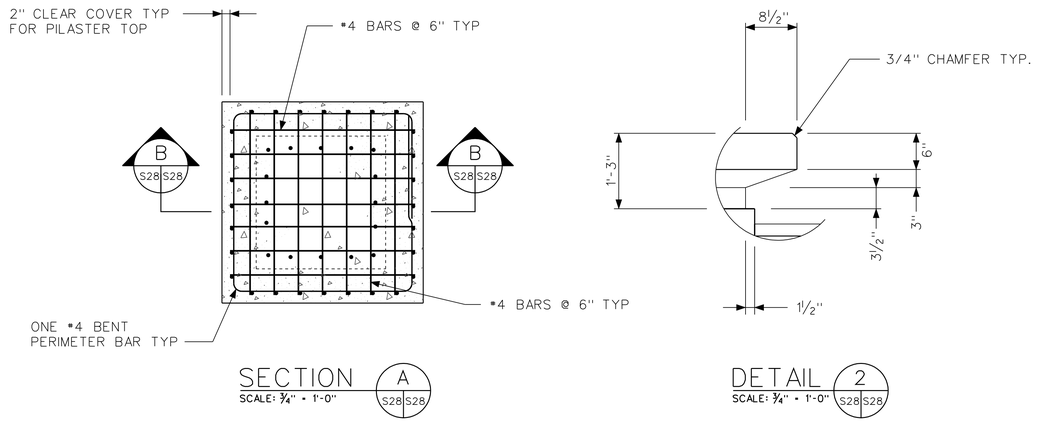

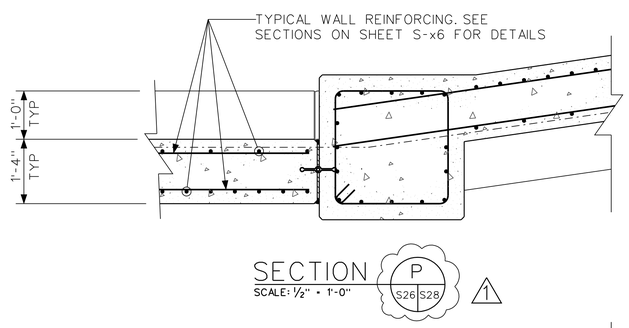

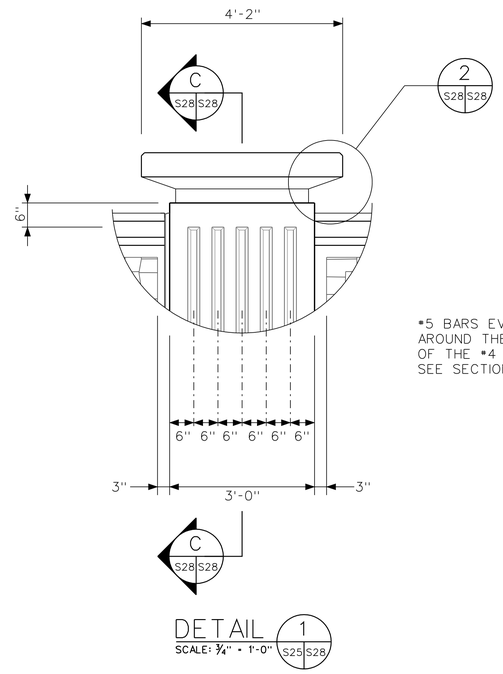

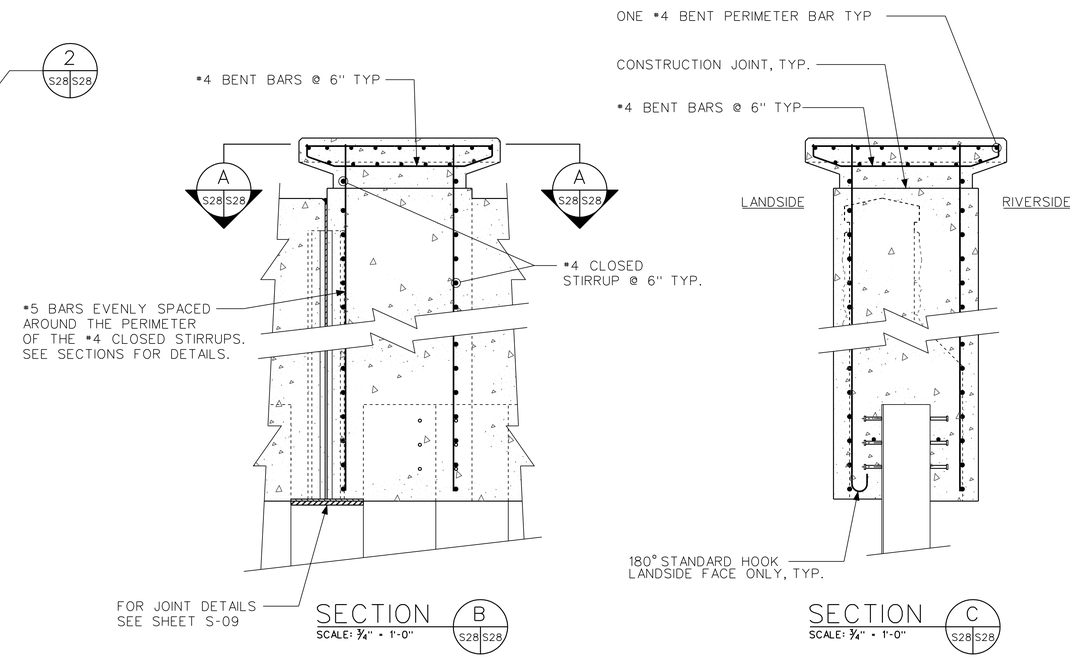

TYPICAL NORTH DRIVE I-WALL PILASTER DETAILS

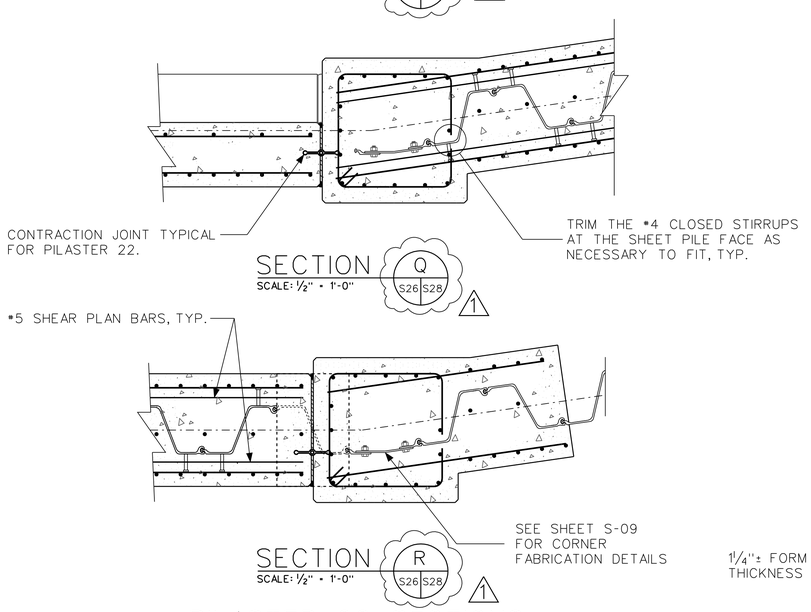

PILASTER 22 SECTIONS

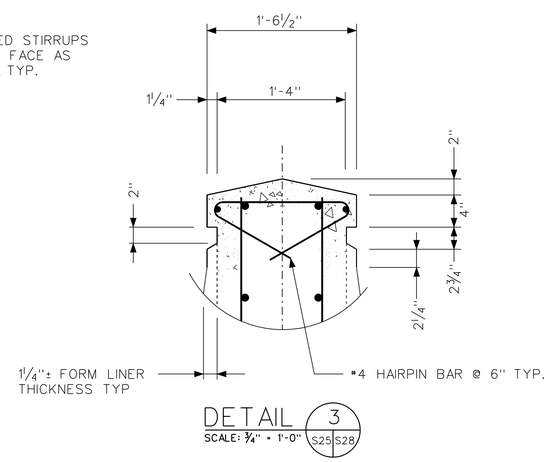

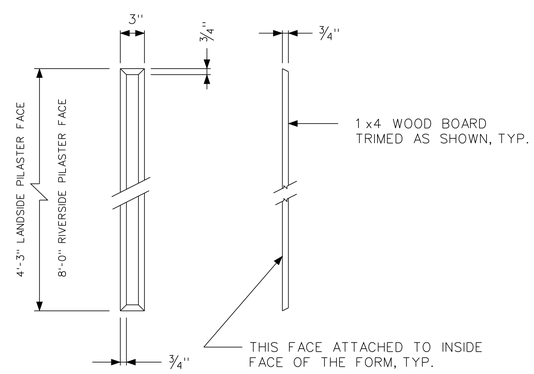

FLUTING STRIP DETAIL
NTS

US Army Corps of Engineers
Chicago District

SYMBOL	DETAIL NAME REFERENCES UPDATED AMENDMENT DESCRIPTION	DATE APPROVED	SYMBOL	DESCRIPTION	DATE APPROVED

U.S. ARMY ENGINEER DISTRICT
CORPS OF ENGINEERS
CHICAGO, ILLINOIS

DESIGNED BY: EGS | DATE: AUGUST 2007
DRAWN BY: EGS | SCALE: AS SHOWN
CHECKED BY: JJS | SOLICITATION NUMBER: W912P6-07-B-0006
SUBMITTED BY: STEVE TREHARNE | DATE:

LITTLE CALUMET RIVER, INDIANA
LOCAL FLOOD PROTECTION
STAGE V, PHASE 2
NORTH DRIVE I-WALL
PILASTER SECTION AND DETAILS

SHEET REFERENCE NUMBER:
S-28
SHEET 104 OF 138

PLOT DATE: 8/24/2007
FILENAME: D:\working\gms25162\LRC52-S28AW01.dgn

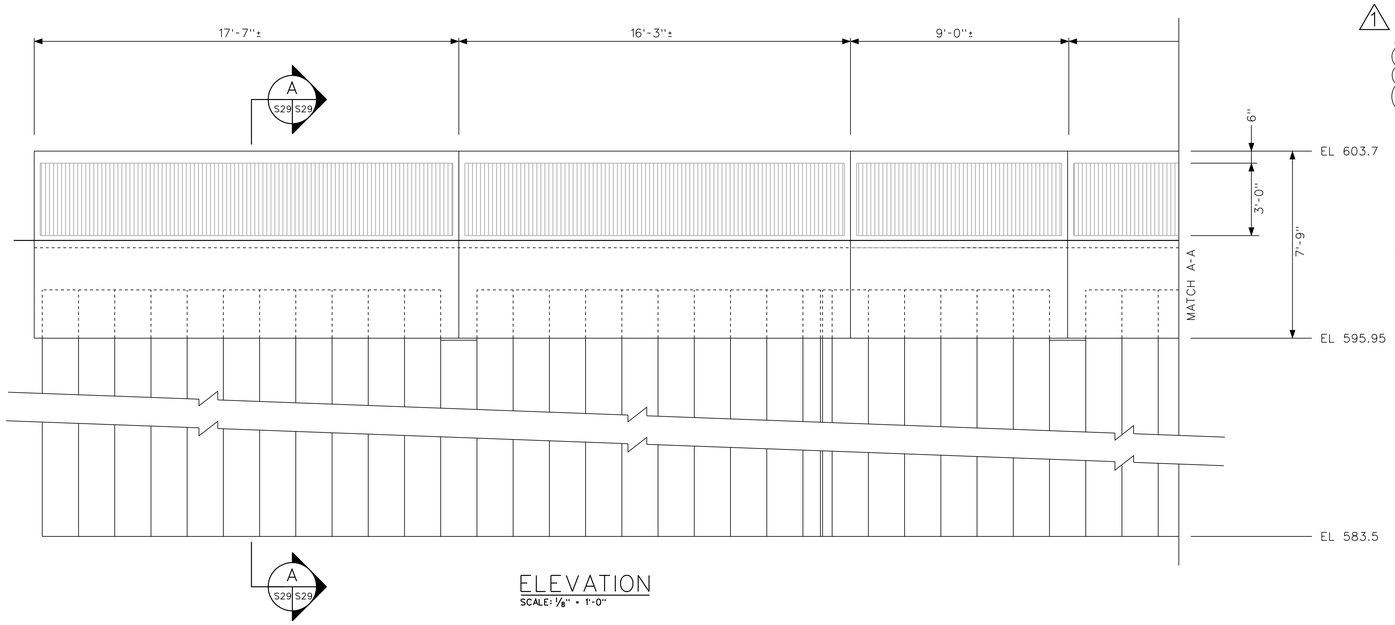

ELEVATION
SCALE: 1/8" = 1'-0"

1

NOTES:

1. THE SCHEDULE FOR ALL WORK ON THESE STRUCTURES SHALL BE COORDINATED WITH THE HAMMOND SANITARY DISTRICT AND PUMP STATION OPERATORS. THE HAMMOND SANITARY DISTRICT SHALL BE CONTACTED AT LEAST 14 CALENDAR DAYS PRIOR TO START OF WORK ON THIS STRUCTURE. PROOF OF CONTACT SHALL BE PROVIDED TO THE GOVERNMENT AT LEAST 10 CALENDAR DAYS PRIOR TO START OF WORK ON THIS STRUCTURE. WORK ON THESE STRUCTURES CANNOT PROCEED WITHOUT THIS PROOF OF CONTACT. THE HAMMOND SANITARY DISTRICT MUST BE NOTIFIED AND MUST PROVIDE APPROVAL PRIOR TO REMOVAL OF THE EXISTING PIPES IN CASE THEY NEED TO MAKE ANY OPERATIONAL CHANGES. THE EXISTING PIPES CANNOT BE REMOVED UNTIL PROOF OF THIS NOTIFICATION AND APPROVAL BY THE HAMMOND SANITARY DISTRICT HAS BEEN SUBMITTED TO THE GOVERNMENT.

2. THE CONTRACTOR SHALL CONSTRUCT THE BASE SLAB AND THE OUTER WALLS OF EACH STRUCTURE WITH THE PIPES REMAINING IN PLACE, INTACT AND IN SERVICE. CARE SHALL BE TAKEN TO NOT DAMAGE OR MOVE THE EXISTING PIPES.

3. AFTER THE BASE SLAB AND OUTER WALLS ARE IN PLACE THE CONTRACTOR SHALL REMOVE THE PIPE SECTIONS CONTAINED IN THE STRUCTURES TO WITHIN 6 INCHES OF THE OUTER WALLS. THE CONTRACTOR SHALL THEN FINISH THE INTERIOR FEATURES OF THE STRUCTURES, INCLUDING INSTALLATION OF THE GATES, AND THE REST OF THE STRUCTURES.

4. THE CONTRACTOR SHALL CHECK THE WEATHER FORECAST FOR THE DAY THAT THE INTERIOR PIPE REMOVALS ARE ANTICIPATED AND THE CONTRACTOR SHALL NOT PLAN ON REMOVING ANY PIPE SECTIONS ON DAYS WHEN THE FORECAST CALLS FOR RAIN.

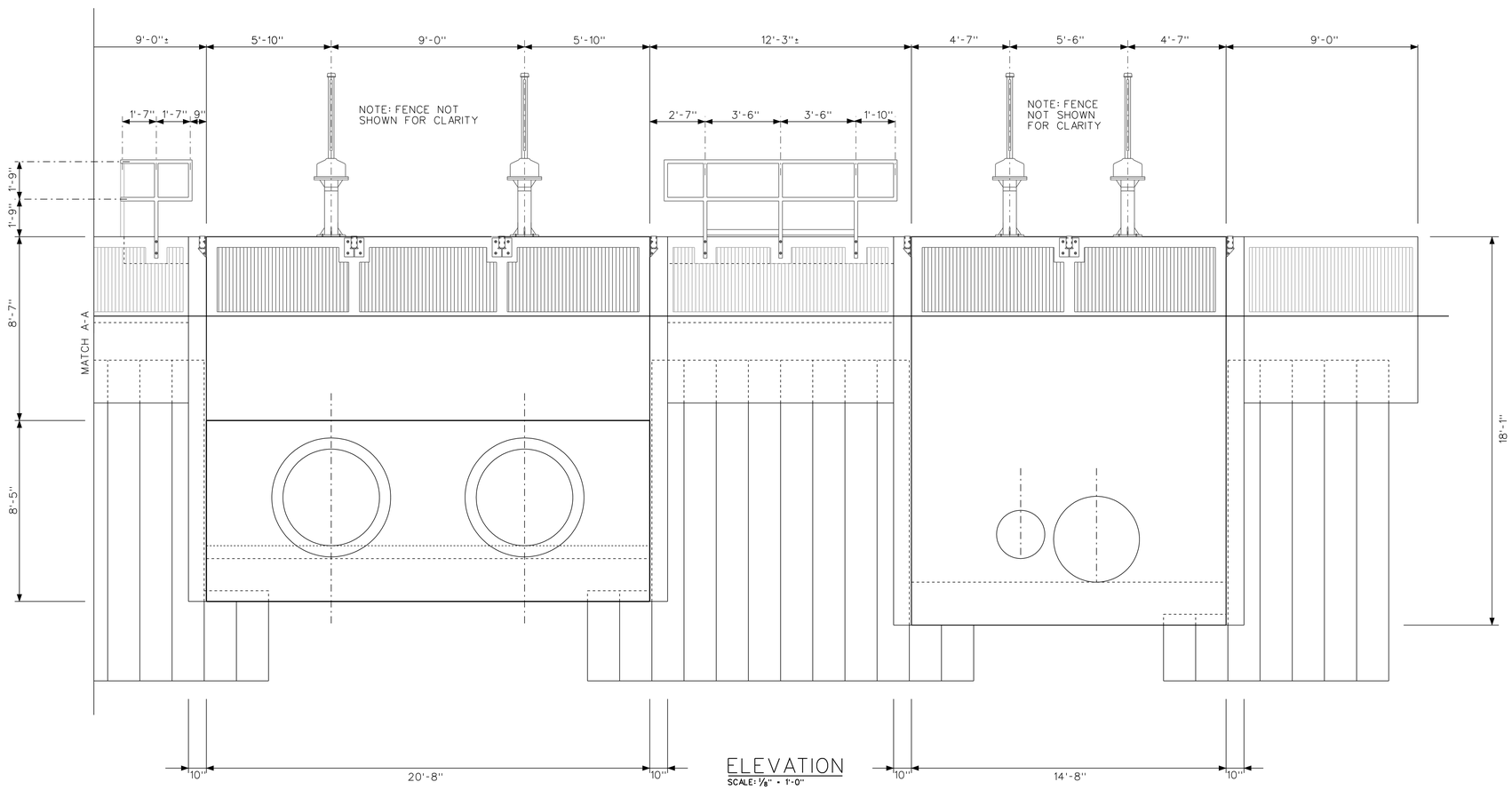

ELEVATION
SCALE: 1/8" = 1'-0"

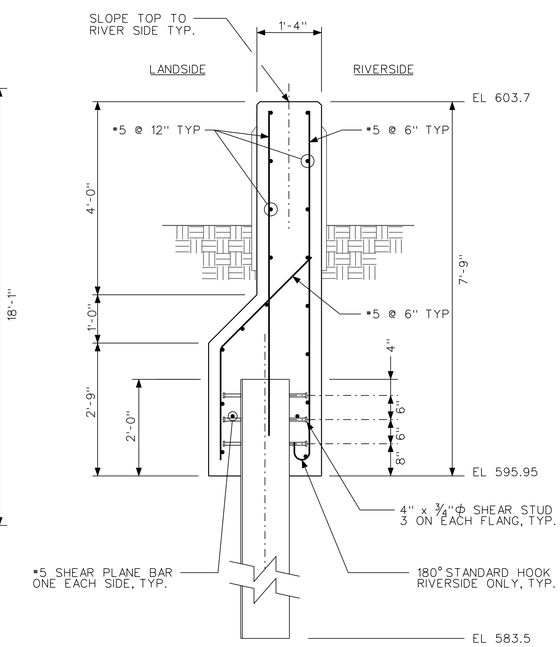

SECTION A
SCALE: 3/4" = 1'-0"
S29 S29

US Army Corps of Engineers
Chicago District

SYMBOL	AMENDMENT DESCRIPTION	DATE APPROVED	SYMBOL	DESCRIPTION	DATE APPROVED
1	NOTES ADDED				

DESIGNED BY: EGS
DRAWN BY: EGS
DATE: AUGUST 2007
SCALE: AS SHOWN
CHECKED BY: JJS
SOLICITATION NUMBER: W912P6-07-B-0006
SUBMITTED BY: STEVE TREHARNE
DATE:

U.S. ARMY ENGINEER DISTRICT
CORPS OF ENGINEERS
CHICAGO, ILLINOIS

LITTLE CALUMET RIVER, INDIANA
LOCAL FLOOD PROTECTION
STAGE V, PHASE 2

KENNEDY AVE OUTLET
STRUCTURES ELEVATIONS

SHEET REFERENCE NUMBER:
S-29
SHEET 105 OF 138

PLOT DATE: 8/24/2007
FILENAME: D:\working\dm25162\LRC52-S29AM01.dgn

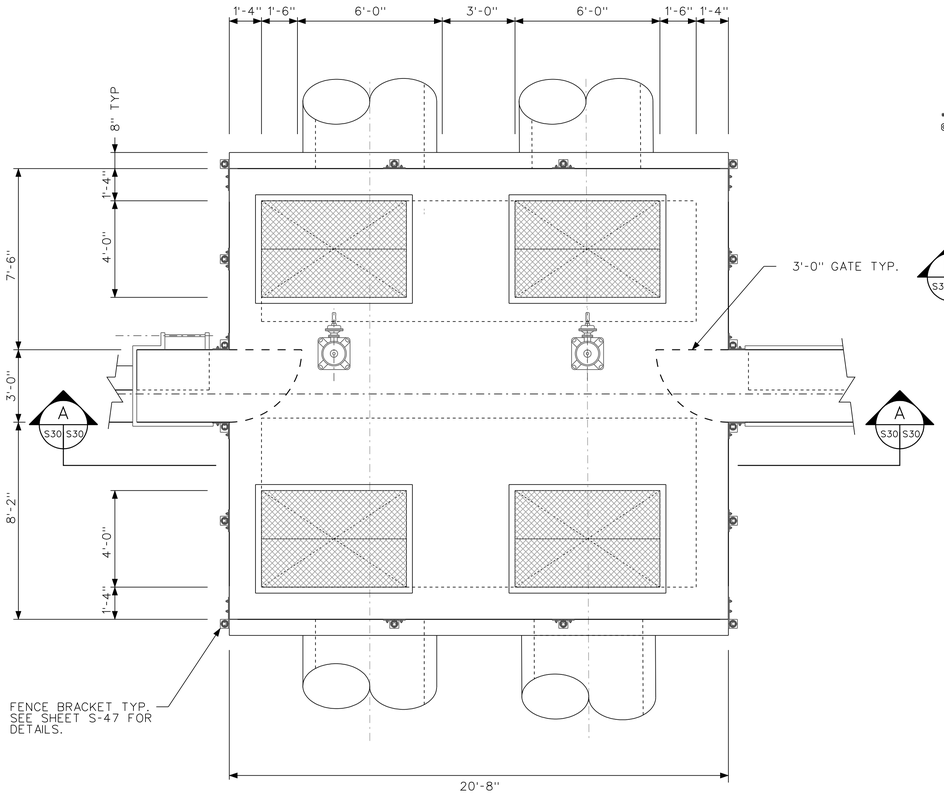

PLAN
SCALE: 1/8" = 1'-0"

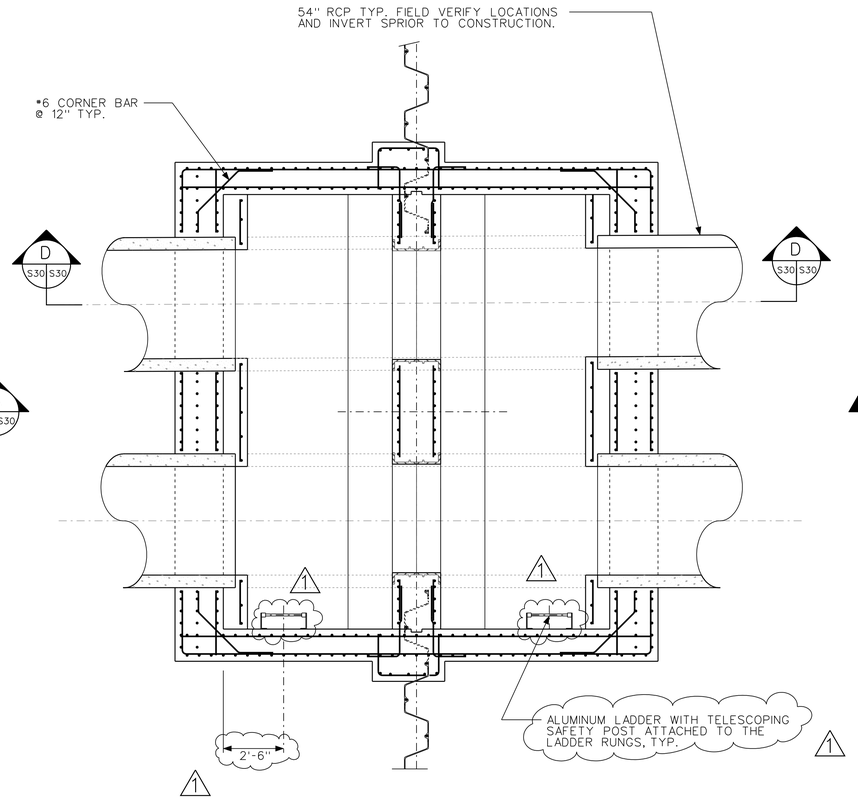

SECTION B
SCALE: 1/8" = 1'-0"

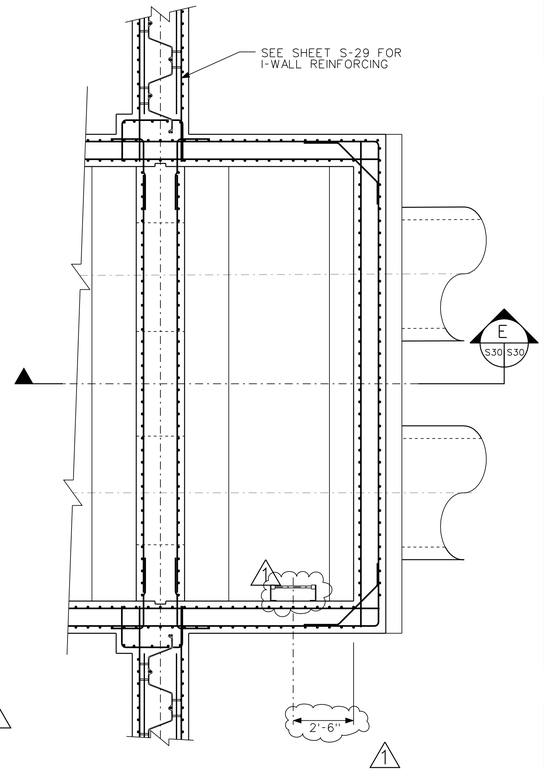

SECTION C
SCALE: 1/8" = 1'-0"

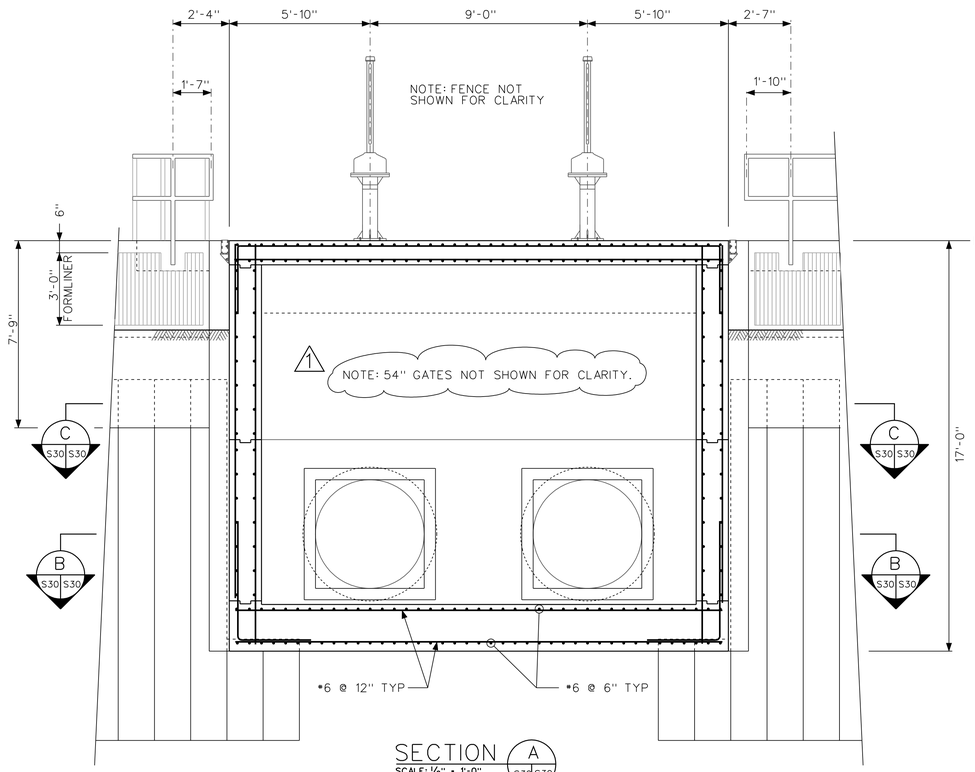

SECTION A
SCALE: 1/8" = 1'-0"

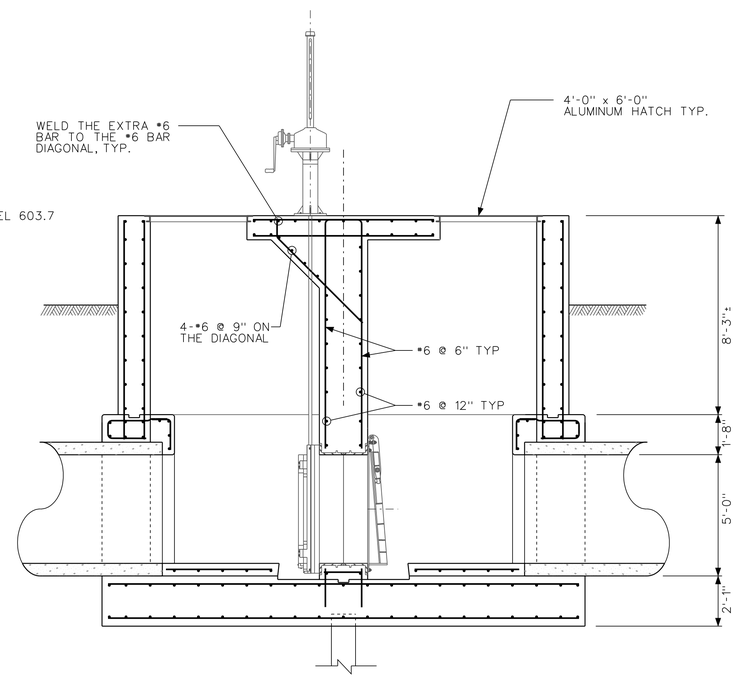

SECTION D
SCALE: 1/8" = 1'-0"

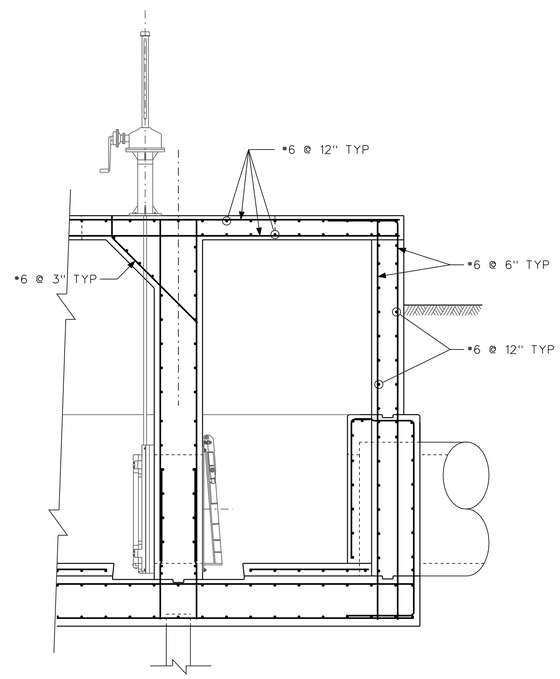

SECTION E
SCALE: 1/8" = 1'-0"

US Army Corps of Engineers
Chicago District

SYMBOL	DESCRIPTION	DATE	APPROVED	SYMBOL	DESCRIPTION	DATE	APPROVED
1	LADDERS ADDED, NOTE UPDATED						
	AMENDMENT DESCRIPTION						

U.S. ARMY ENGINEER DISTRICT
CORPS OF ENGINEERS
CHICAGO, ILLINOIS

DESIGNED BY: EGS
DATE: AUGUST 2007
DRAWN BY: EGS
SCALE: AS SHOWN
CHECKED BY: JJS
SOLICITATION NUMBER: W912P6-07-B-0006
SUBMITTED BY: STEVE TREHARNE
DATE:

LITTLE CALUMET RIVER, INDIANA
LOCAL FLOOD PROTECTION
STAGE V, PHASE 2
KENNEDY AVE DOUBLE 54 INCH
GATEWELL PLAN AND SECTIONS

SHEET REFERENCE NUMBER:
S-30
SHEET 106 OF 138

PLOT DATE: 8/24/2007
FILENAME: D:\working\dma25162\LRC52-S30A001.dgn

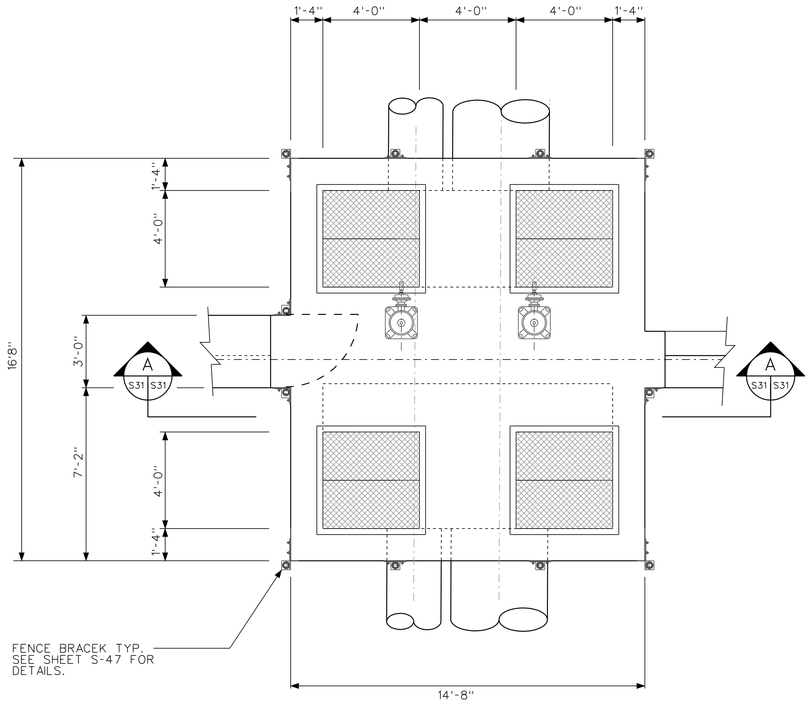

PLAN
SCALE: 1/8" = 1'-0"

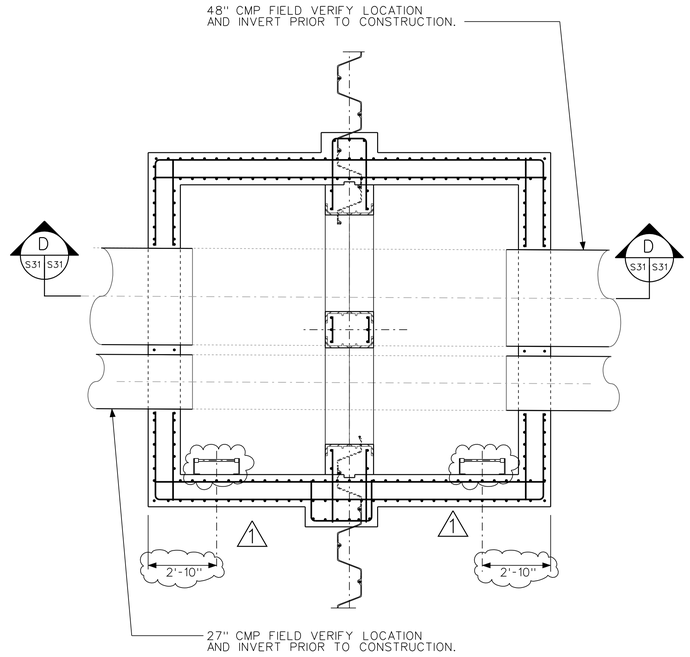

SECTION B S31 S31
SCALE: 3/8" = 1'-0"

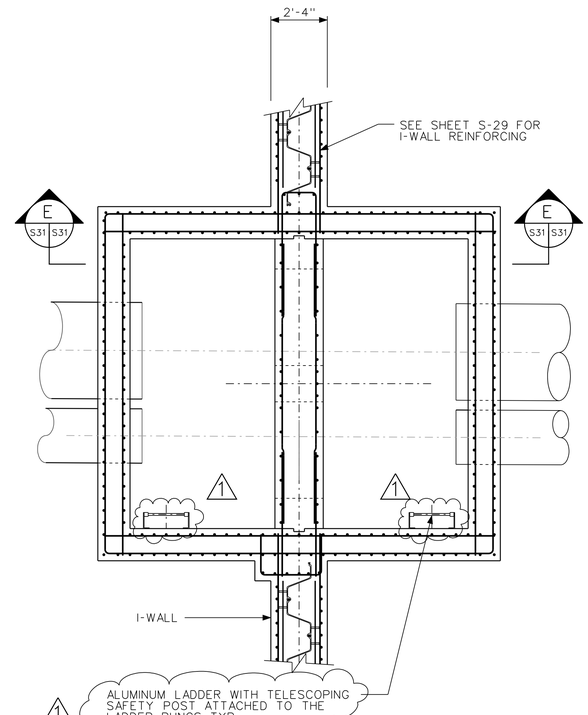

SECTION C S31 S31
SCALE: 3/8" = 1'-0"

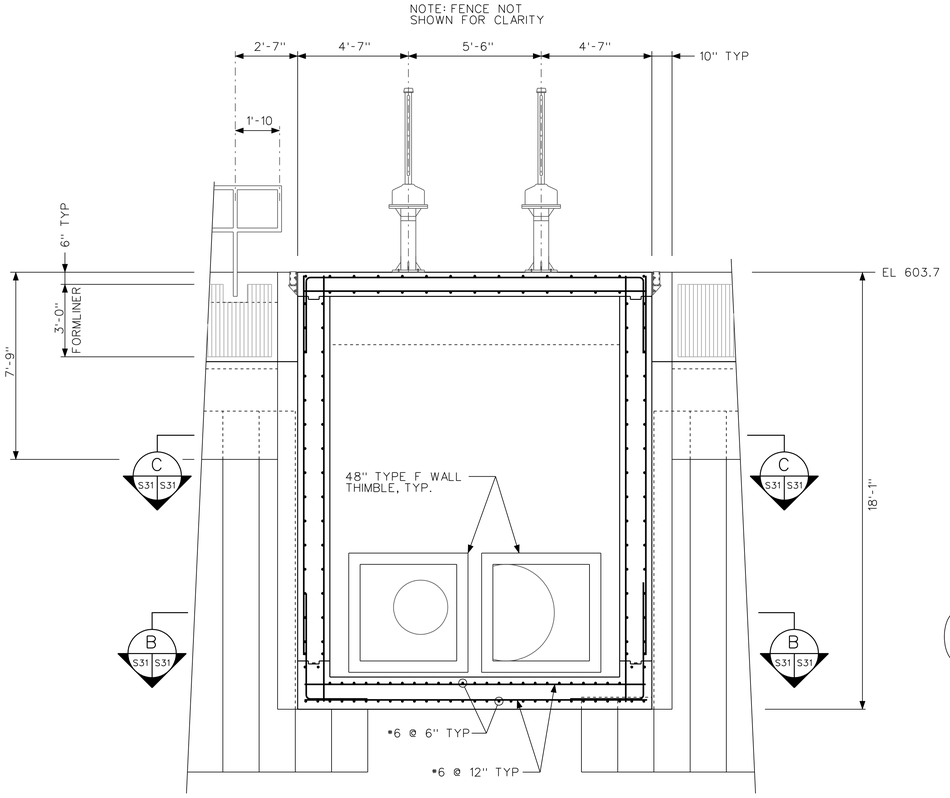

SECTION A S31 S31
SCALE: 3/8" = 1'-0"

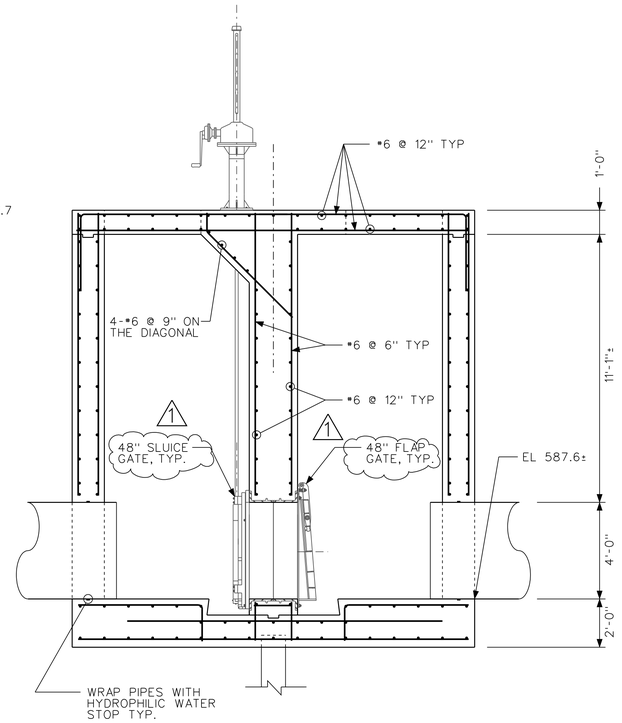

SECTION D S31 S31
SCALE: 3/8" = 1'-0"

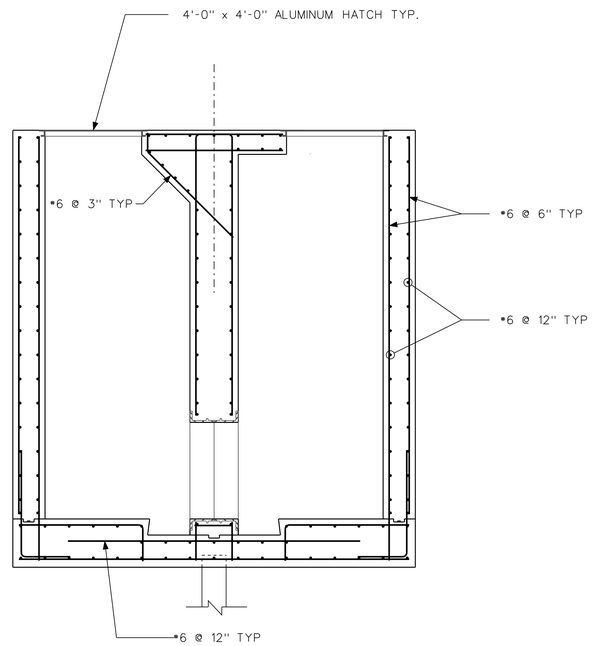

SECTION E S31 S31
SCALE: 3/8" = 1'-0"

US Army Corps
of Engineers
Chicago District

SYMBOL	AMENDMENT DESCRIPTION	DATE APPROVED	SYMBOL	DESCRIPTION	DATE APPROVED
1	LADDERS ADDED, NOTE ADDED				

DESIGNED BY: EGS
DATE: AUGUST 2007
DRAWN BY: EGS
SCALE: AS SHOWN
CHECKED BY: JJS
SOLICITATION NUMBER: W912P6-07-B-0006
SUBMITTED BY: STEVE TREHARNE
DATE:

U.S. ARMY ENGINEER DISTRICT
CORPS OF ENGINEERS
CHICAGO, ILLINOIS

LITTLE CALUMET RIVER, INDIANA
LOCAL FLOOD PROTECTION
STAGE V, PHASE 2

KENNEDY AVE PUMP STATION
GATEWELL PLAN AND SECTIONS

SHEET
REFERENCE
NUMBER:
S-31
SHEET 107 OF 138

PLOT DATE: 8/24/2007
FILENAME: D:\working\sm25162\LRC52-S31A001.dgn

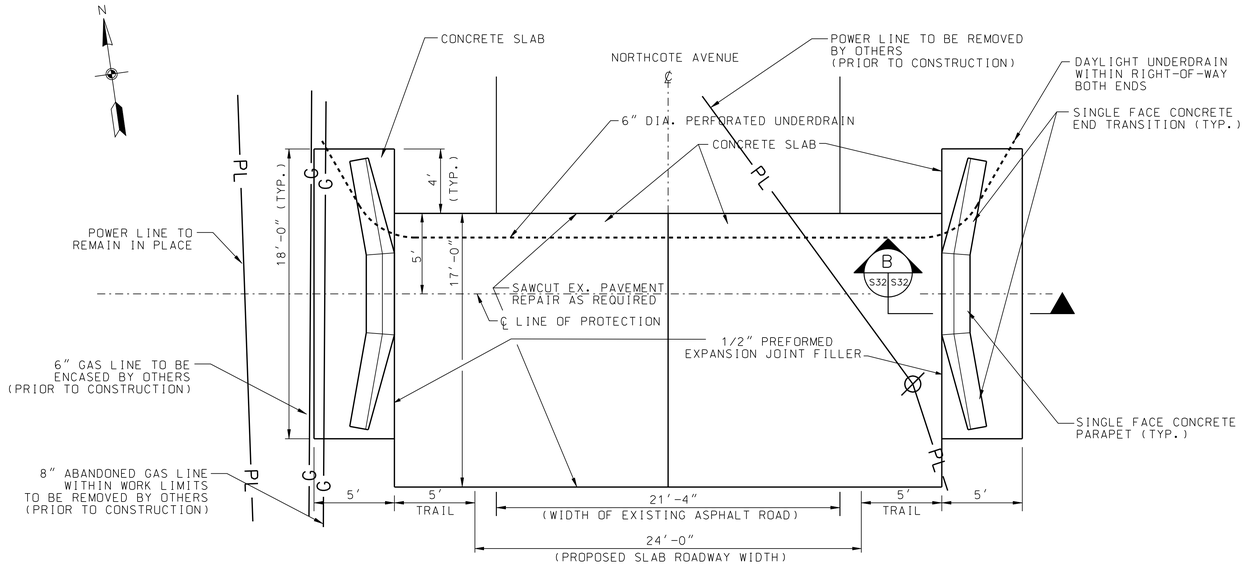

PLAN
SCALE: 1/4" = 1'-0"

NOTES:

1. FOR LOCATION OF CLOSURE STRUCTURE, SEE CIVIL SHEET C-11.
2. DOWELS SHALL BE 1-1/4" IN DIAMETER, 18" LONG AND PLACED 15" ON CENTER AT MID-DEPTH IN THE NEW SECTION OF CONCRETE. ONE HALF OF EACH DOWEL SHALL BE ANCHORED IN THE EXISTING CONCRETE. THE OTHER HALF SHALL BE PAINTED AND OILED.
3. GRANULAR BASE MATERIAL SHALL BE WELL-GRADED WITH ENOUGH FINES TO DECREASE THE PERMEABILITY TO THE RANGE OF 10E-04 TO 10E-05 CM/SEC. FINES SHALL BE ROCK SCREENINGS (CHOKER STONE) NOT CLAY AND SILT.

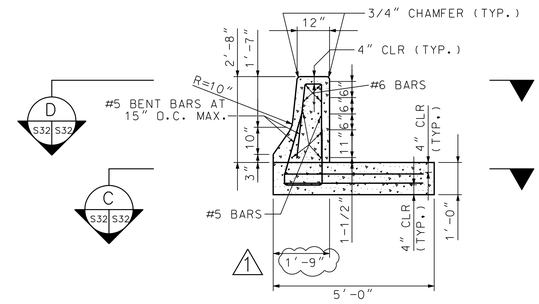

SECTION B S32 S32
NTS

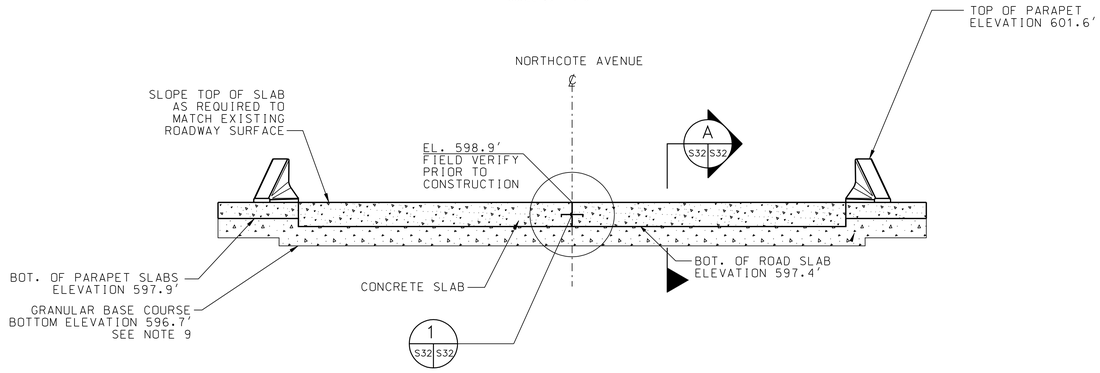

PROFILE
SCALE: 1/4" = 1'-0"

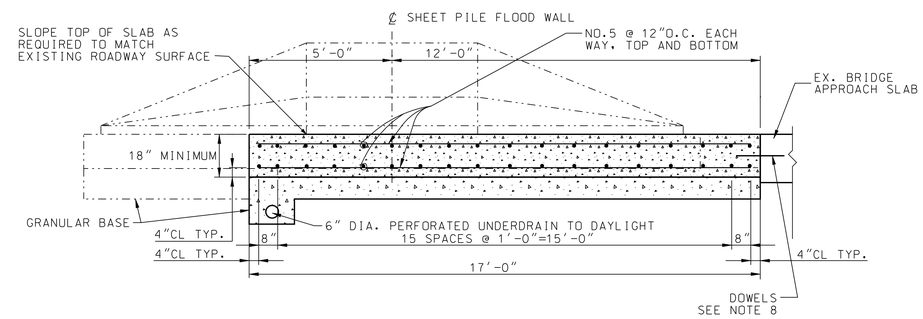

SECTION A S32 S32
NTS

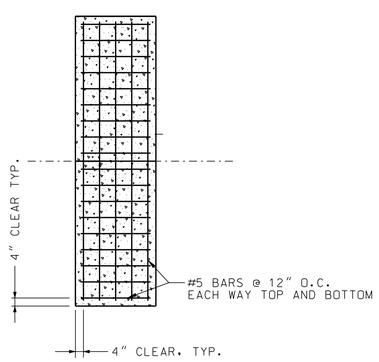

SECTION C S32 S32
NTS

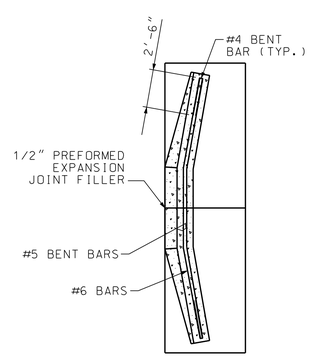

SECTION D S32 S32
NTS

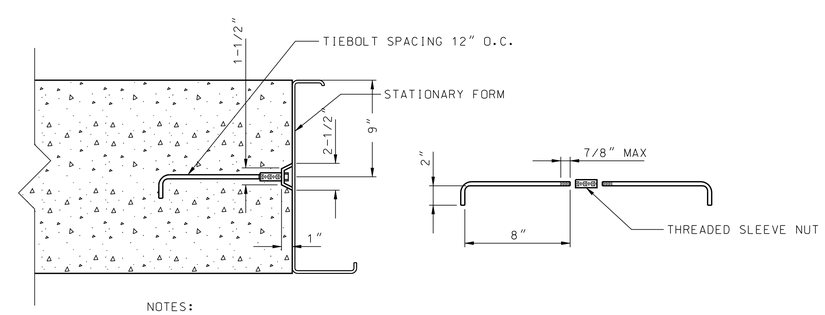

NOTES:

1. TIEBOLTS SHALL BE 9/16" DIA. BAR WITH ROLLED THREADS OR 5/8" DIA. BAR WITH CUT THREADS. THE ASSEMBLED TIEBOLTS SHALL WITHSTAND A MINIMUM PULLOUT OR YIELDING LOAD OF 15,000 POUNDS. ONLY TIEBOLTS WHICH ARE SUPPLIED BY A C.O.E. APPROVED MANUFACTURER WILL BE PERMITTED.
2. MAKE THREADED SLEEVE NUT FROM STEEL PIPE OR HEXAGONAL STEEL BAR 1-1/16" DIA. x 1-7/8" LONG OR HIGH STRENGTH STEEL BAR 27/32" DIA. x 2" LONG.

DETAIL 1 S32 S32
NTS

US Army Corps of Engineers
Chicago District

SYMBOL	DIMENSION ADDED AMENDMENT DESCRIPTION	DATE APPROVED SYMBOL	DESCRIPTION	DATE APPROVED

DESIGNED BY: SENATE
DATE: AUGUST 2007
DRAWN BY: SENATE
SCALE: AS SHOWN
CHECKED BY: SENATE
SOLICITATION NUMBER: W912P6-07-B-0006
SUBMITTED BY: STEVE TREHARNE
DATE:

U.S. ARMY ENGINEER DISTRICT
CORPS OF ENGINEERS
CHICAGO, ILLINOIS

SENATE ENGINEERING COMPANY
CONSULTING ENGINEERS
PITTSBURGH, PENNSYLVANIA

LITTLE CALUMET RIVER, INDIANA
LOCAL FLOOD PROTECTION
STAGE V, PHASE 2

NORTHCOTE SANDBAG CLOSURE
PLAN, ELEVATION, AND SECTIONS

SHEET REFERENCE NUMBER:
S-32
SHEET 108 OF 138

PLOT DATE: 8/24/2007
FILENAME: D:\working\sm23162\LRC52-S32AM01.dgn

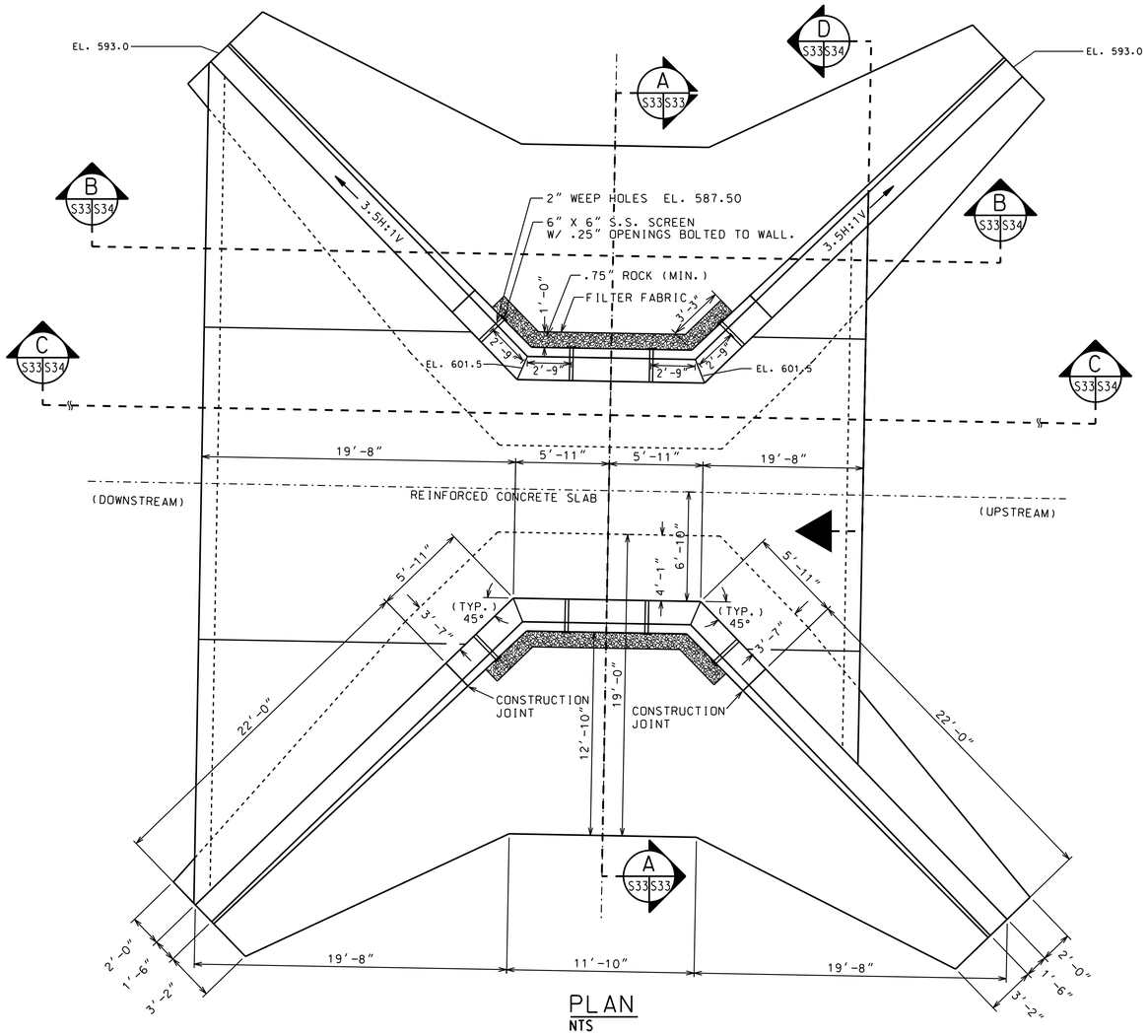

PLAN
NTS

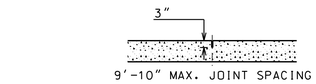

CONTRACTION JOINT DETAIL
NTS

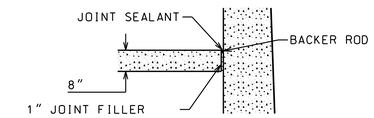

EXPANSION JOINT DETAIL
NTS

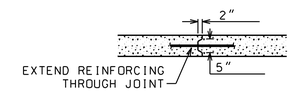

CONSTRUCTION JOINT DETAIL
NTS

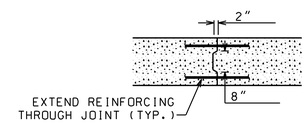

WINGWALL CONSTRUCTION JOINT DETAIL
NTS

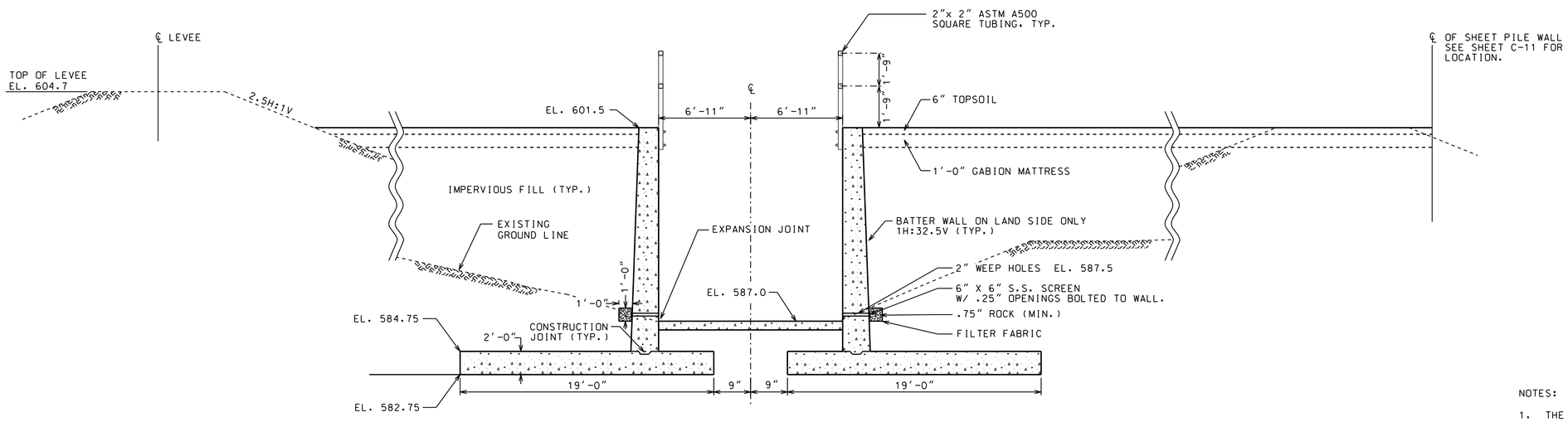

SECTION A
NTS

NOTES:

1. THE CONTROL STRUCTURE IS SYMMETRICAL ABOUT CENTERLINE TO A EAST-WEST CENTERLINE.
2. SEE SHEET C-56 FOR SITE PLAN.

US Army Corps of Engineers
Chicago District

SYMBOL	DESCRIPTION	DATE	APPROVED
1	MULTIPLE UPDATES SHEET REISSUED		
	AMENDMENT DESCRIPTION	DATE	APPROVED

DESIGNED BY: RANI
DATE: AUGUST 2007
DRAWN BY: RANI
SCALE: AS SHOWN
CHECKED BY: RANI
SOLICITATION NUMBER: W912P6-07-B-0006
SUBMITTED BY: STEVE TRECHARNE
DATE:

U.S. ARMY ENGINEER DISTRICT
CORPS OF ENGINEERS
CHICAGO, ILLINOIS

RANI ENGINEERING, INC.
556 RICE ST., ST. PAUL, MN 55103
(612) 225-9789

LITTLE CALUMET RIVER, INDIANA
LOCAL FLOOD PROTECTION
STAGE V, PHASE 2

HART DITCH CONTROL STRUCTURE
PLAN AND ELEVATION

SHEET REFERENCE NUMBER:
S-33
SHEET 109 OF 138

PLOT DATE: $DATE$
FILENAME: $FILENAME$

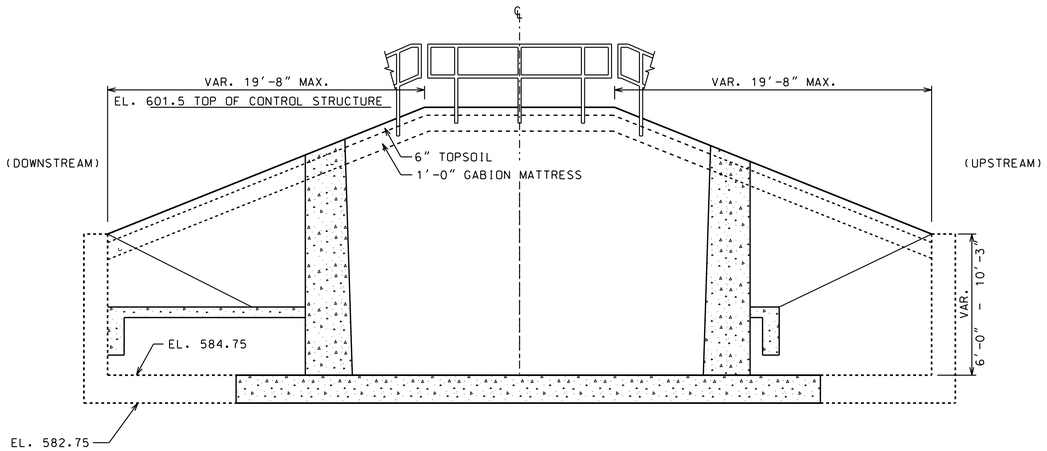

SECTION B (S33|S34)
NTS

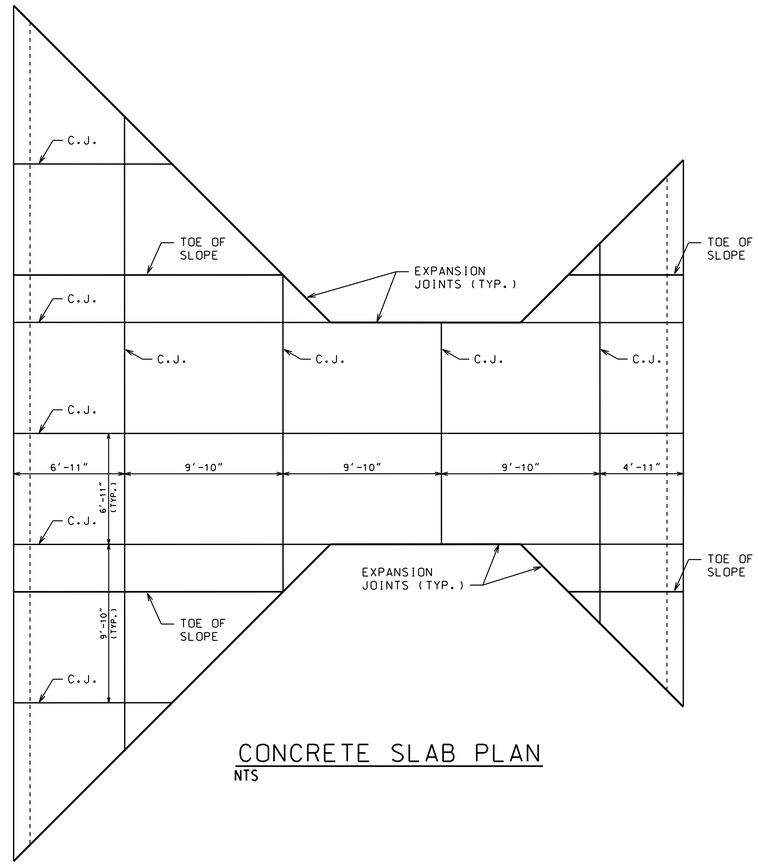

CONCRETE SLAB PLAN
NTS

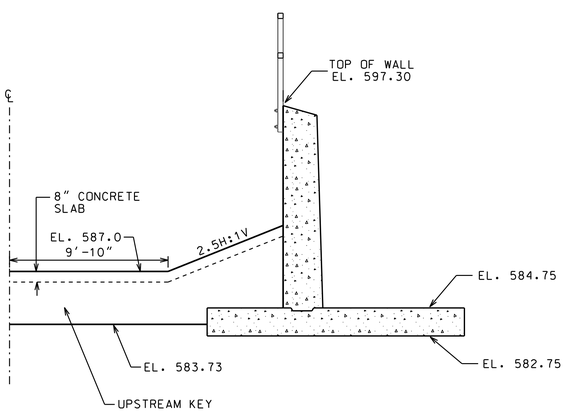

SECTION D (S33|S34)
NTS

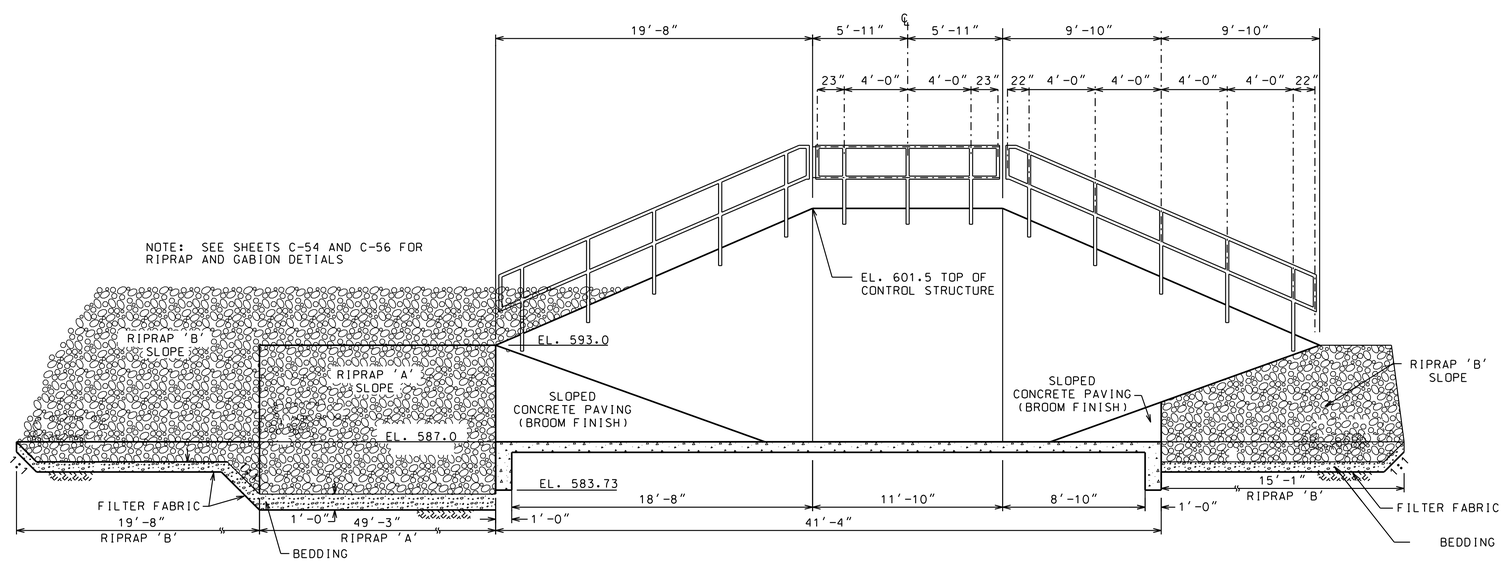

SECTION C (S33|S34)
NTS

US Army Corps of Engineers
Chicago District

SYMBOL	MULTIPLE UPDATES SHEET REISSUED AMENDMENT DESCRIPTION	DATE APPROVED	SYMBOL	DESCRIPTION	DATE APPROVED

DESIGNED BY: EGS | DATE: AUGUST 2007
DRAWN BY: EGS | SCALE: AS SHOWN
CHECKED BY: JJS | SOLICITATION NUMBER: W912P6-07-B-0006
SUBMITTED BY: STEVE TREHARNE | DATE:

U.S. ARMY ENGINEER DISTRICT
CORPS OF ENGINEERS
CHICAGO, ILLINOIS

RANI ENGINEERING, INC.
556 RICE ST., ST. PAUL, MN 55103
(612) 225-9789

LITTLE CALUMET RIVER, INDIANA
LOCAL FLOOD PROTECTION
STAGE V, PHASE 2

HART DITCH CONTROL STRUCTURE DETAILS

SHEET REFERENCE NUMBER:
S-34
SHEET 110 OF 138

PLOT DATE: $DATE$
FILENAME: $FILENAME$

NOTES:

1. REINFORCING BARS SHALL BE PLACED TO PROVIDE 3" OF COVER UNLESS WHEN CAST AGAINST EARTH 4" COVER SHALL BE PROVIDED.

2. REINFORCING SPLICES SHALL BE MADE IN ACCORDANCE WITH ACI 318.

3. REINFORCEMENT HOOKS AND BENDS SHALL CONFORM TO ACI STANDARD HOOKS AND BENDS.

4. REINFORCING SPLICES MAY BE REQUIRED THAT ARE NOT SHOWN ON THESE PLANS. REINFORCEMENT SPLICES SHALL BE LOCATED AT AREAS OF MINIMUM STRESS. SPLICE LOCATIONS AND LENGTHS SHALL BE SHOWN ON THE REINFORCING SHOP DRAWINGS FOR APPROVAL.

5. ADDITIONAL CONSTRUCTION JOINTS (HORIZONTAL AND VERTICAL) SHALL BE SUBMITTED WITH A DRAWING FOR APPROVAL.

6. ABBREVIATIONS:
   C.J. - CONTRACTION JOINT
   E.J. - EXPANSION JOINT
   CLR. - CLEAR

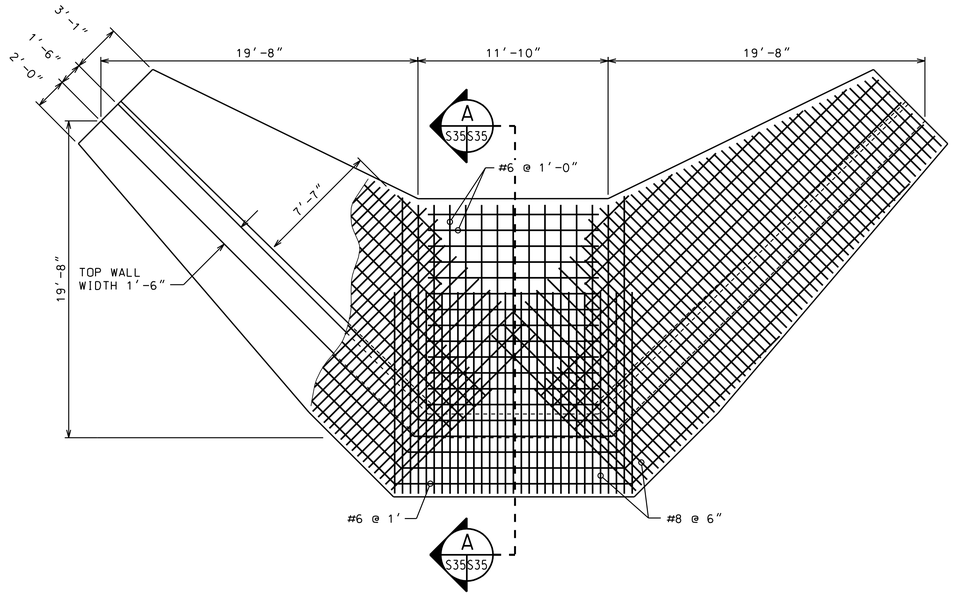

WINGWALL PLAN
NTS

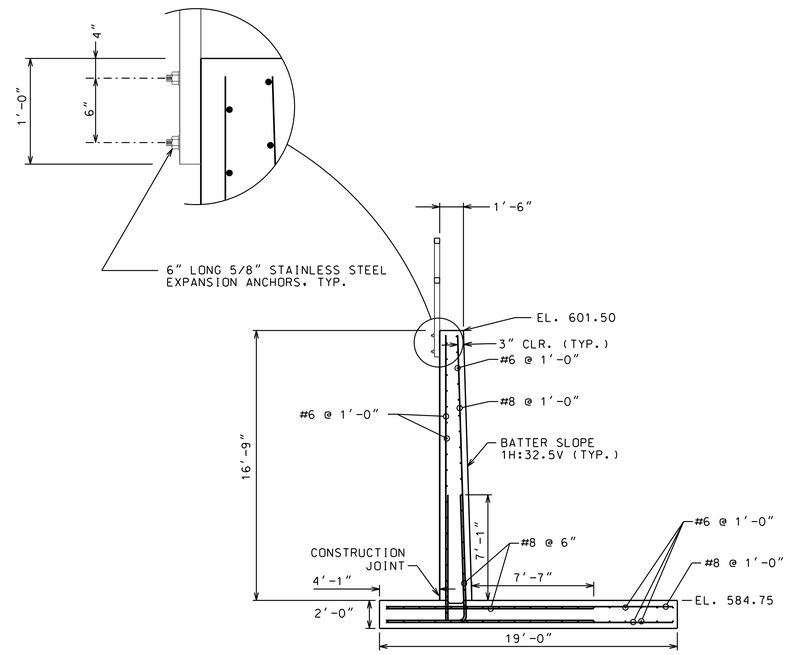

WINGWALL SECTION A
NTS

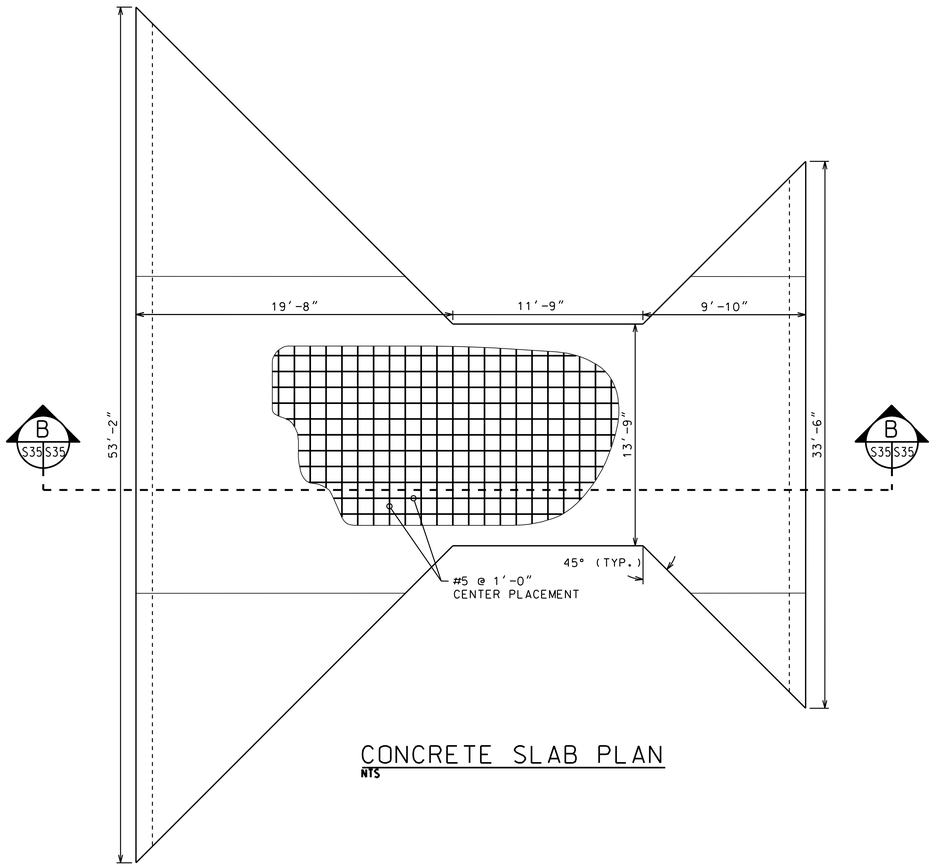

CONCRETE SLAB PLAN
NTS

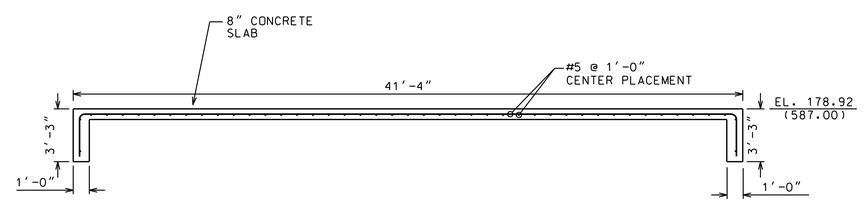

CONCRETE SLAB SECTION B
NTS

US Army Corps of Engineers
Chicago District

SYMBOL	DESCRIPTION	DATE APPROVED	SYMBOL	DESCRIPTION	DATE APPROVED
1	MULTIPLE UPDATES SHEET REISSUED AMENDMENT				

DESIGNED BY: RANI
DATE: AUGUST 2007
DRAWN BY: RANI
SCALE: AS SHOWN
CHECKED BY: RANI
SOLICITATION NUMBER: W912P6-07-B-0006
STEVE TRECHARNE
SUBMITTED BY:
DATE:

U.S. ARMY ENGINEER DISTRICT
CORPS OF ENGINEERS
CHICAGO, ILLINOIS

RANI ENGINEERING, INC.
556 RICE ST., ST. PAUL, MN 55103 (612) 225-9789

LITTLE CALUMET RIVER, INDIANA
LOCAL FLOOD PROTECTION
STAGE V, PHASE 2
HART DITCH CONTROL STRUCTURE
SECTIONS

SHEET REFERENCE NUMBER:
S-35
SHEET 111 OF 138

PLOT DATE: $DATE$
FILENAME: $FILENAME$

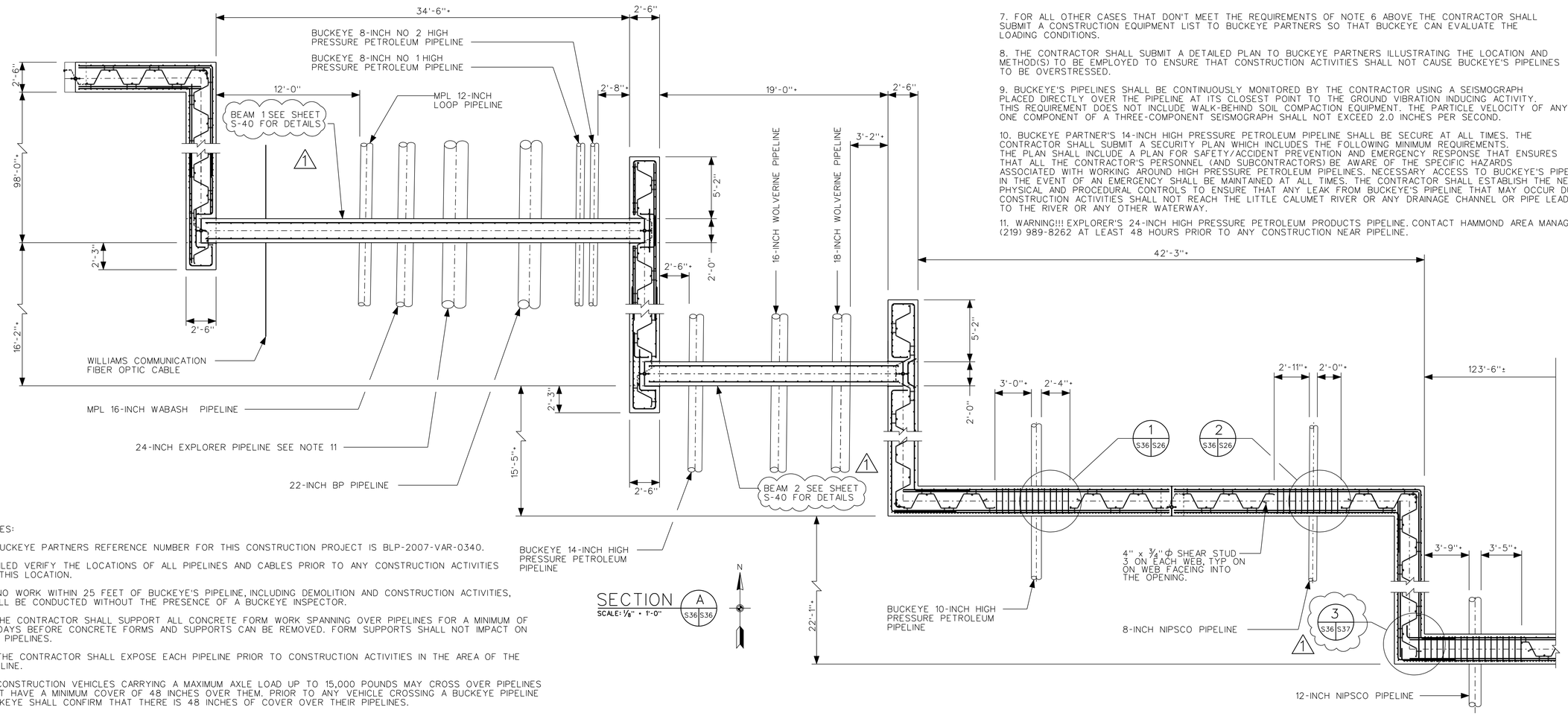

SECTION A S36 S36
SCALE: 1/8" = 1'-0"

NOTES:

1. BUCKEYE PARTNERS REFERENCE NUMBER FOR THIS CONSTRUCTION PROJECT IS BLP-2007-VAR-0340.

2. FILED VERIFY THE LOCATIONS OF ALL PIPELINES AND CABLES PRIOR TO ANY CONSTRUCTION ACTIVITIES AT THIS LOCATION.

3. NO WORK WITHIN 25 FEET OF BUCKEYE'S PIPELINE, INCLUDING DEMOLITION AND CONSTRUCTION ACTIVITIES, SHALL BE CONDUCTED WITHOUT THE PRESENCE OF A BUCKEYE INSPECTOR.

4. THE CONTRACTOR SHALL SUPPORT ALL CONCRETE FORM WORK SPANNING OVER PIPELINES FOR A MINIMUM OF 14 DAYS BEFORE CONCRETE FORMS AND SUPPORTS CAN BE REMOVED. FORM SUPPORTS SHALL NOT IMPACT ON THE PIPELINES.

5. THE CONTRACTOR SHALL EXPOSE EACH PIPELINE PRIOR TO CONSTRUCTION ACTIVITIES IN THE AREA OF THE PIPELINE.

6. CONSTRUCTION VEHICLES CARRYING A MAXIMUM AXLE LOAD UP TO 15,000 POUNDS MAY CROSS OVER PIPELINES THAT HAVE A MINIMUM COVER OF 48 INCHES OVER THEM. PRIOR TO ANY VEHICLE CROSSING A BUCKEYE PIPELINE BUCKEYE SHALL CONFIRM THAT THERE IS 48 INCHES OF COVER OVER THEIR PIPELINES.

NOTES CONTINUED:

7. FOR ALL OTHER CASES THAT DON'T MEET THE REQUIREMENTS OF NOTE 6 ABOVE THE CONTRACTOR SHALL SUBMIT A CONSTRUCTION EQUIPMENT LIST TO BUCKEYE PARTNERS SO THAT BUCKEYE CAN EVALUATE THE LOADING CONDITIONS.

8. THE CONTRACTOR SHALL SUBMIT A DETAILED PLAN TO BUCKEYE PARTNERS ILLUSTRATING THE LOCATION AND METHOD(S) TO BE EMPLOYED TO ENSURE THAT CONSTRUCTION ACTIVITIES SHALL NOT CAUSE BUCKEYE'S PIPELINES TO BE OVERSTRESSED.

9. BUCKEYE'S PIPELINES SHALL BE CONTINUOUSLY MONITORED BY THE CONTRACTOR USING A SEISMOGRAPH PLACED DIRECTLY OVER THE PIPELINE AT ITS CLOSEST POINT TO THE GROUND VIBRATION INDUCING ACTIVITY. THIS REQUIREMENT DOES NOT INCLUDE WALK-BEHIND SOIL COMPACTION EQUIPMENT. THE PARTICLE VELOCITY OF ANY ONE COMPONENT OF A THREE-COMPONENT SEISMOGRAPH SHALL NOT EXCEED 2.0 INCHES PER SECOND.

10. BUCKEYE PARTNER'S 14-INCH HIGH PRESSURE PETROLEUM PIPELINE SHALL BE SECURE AT ALL TIMES. THE CONTRACTOR SHALL SUBMIT A SECURITY PLAN WHICH INCLUDES THE FOLLOWING MINIMUM REQUIREMENTS. THE PLAN SHALL INCLUDE A PLAN FOR SAFETY/ACCIDENT PREVENTION AND EMERGENCY RESPONSE THAT ENSURES THAT ALL THE CONTRACTOR'S PERSONNEL (AND SUBCONTRACTORS) BE AWARE OF THE SPECIFIC HAZARDS ASSOCIATED WITH WORKING AROUND HIGH PRESSURE PETROLEUM PIPELINES. NECESSARY ACCESS TO BUCKEYE'S PIPELINES IN THE EVENT OF AN EMERGENCY SHALL BE MAINTAINED AT ALL TIMES. THE CONTRACTOR SHALL ESTABLISH THE NECESSARY PHYSICAL AND PROCEDURAL CONTROLS TO ENSURE THAT ANY LEAK FROM BUCKEYE'S PIPELINE THAT MAY OCCUR DURING CONSTRUCTION ACTIVITIES SHALL NOT REACH THE LITTLE CALUMET RIVER OR ANY DRAINAGE CHANNEL OR PIPE LEADING TO THE RIVER OR ANY OTHER WATERWAY.

11. WARNING!!! EXPLORER'S 24-INCH HIGH PRESSURE PETROLEUM PRODUCTS PIPELINE. CONTACT HAMMOND AREA MANAGER AT (219) 989-8262 AT LEAST 48 HOURS PRIOR TO ANY CONSTRUCTION NEAR PIPELINE.

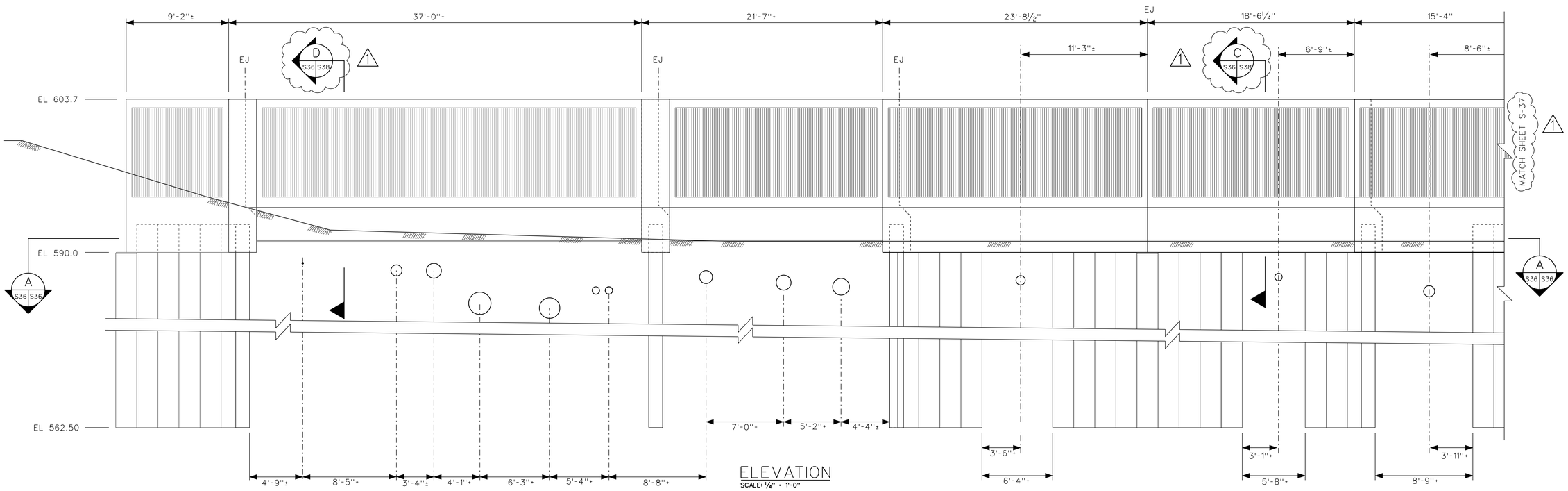

ELEVATION
SCALE: 1/4" = 1'-0"

US Army Corps of Engineers
Chicago District

SYMBOL	SHEET REFERENCES CORRECTIONS AMENDMENT DESCRIPTION	DATE APPROVED	SYMBOL	DESCRIPTION	DATE APPROVED

DESIGNED BY: EGS
DRAWN BY: EGS
CHECKED BY: JJS
SUBMITTED BY: STEVE TREHARNE
DATE: AUGUST 2007
SCALE: AS SHOWN
SOLICITATION NUMBER: W912P6-07-B-0006
DATE:

U.S. ARMY ENGINEER DISTRICT
CORPS OF ENGINEERS
CHICAGO, ILLINOIS

LITTLE CALUMET RIVER, INDIANA
LOCAL FLOOD PROTECTION
STAGE V, PHASE 2
UTILITY CORRIDOR
NORTHEAST SIDE PLAN AND ELEVATION

SHEET REFERENCE NUMBER:
S-36
SHEET 112 OF 138

PLOT DATE: 8/24/2007
FILENAME: D:\working\gms25162\LRC52-S36AW01.dgn

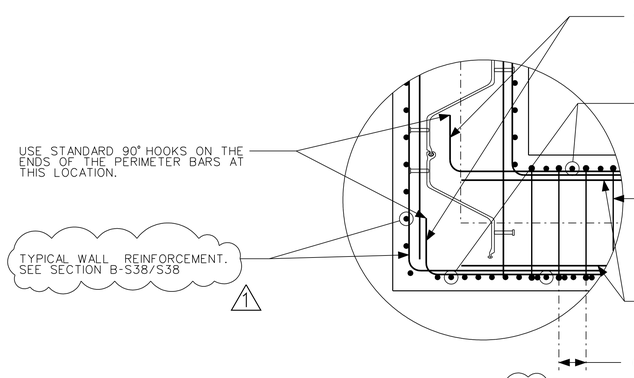

DETAIL 3 S36 S37 1
NTS

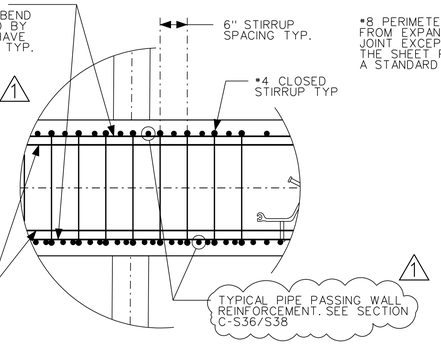

DETAIL 1 S36 S37 2 S36 S37 1
NTS

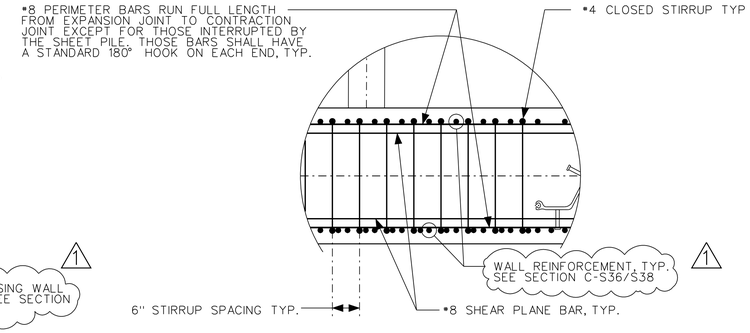

DETAIL 4 S37 S37 5 S37 S37
NTS

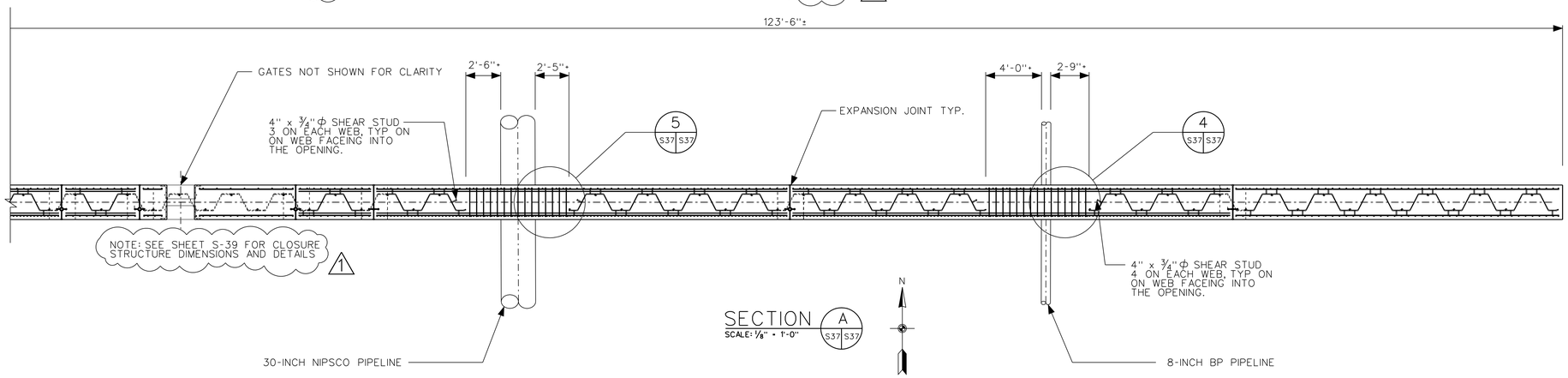

SECTION A S37 S37
SCALE: 1/8" = 1'-0"

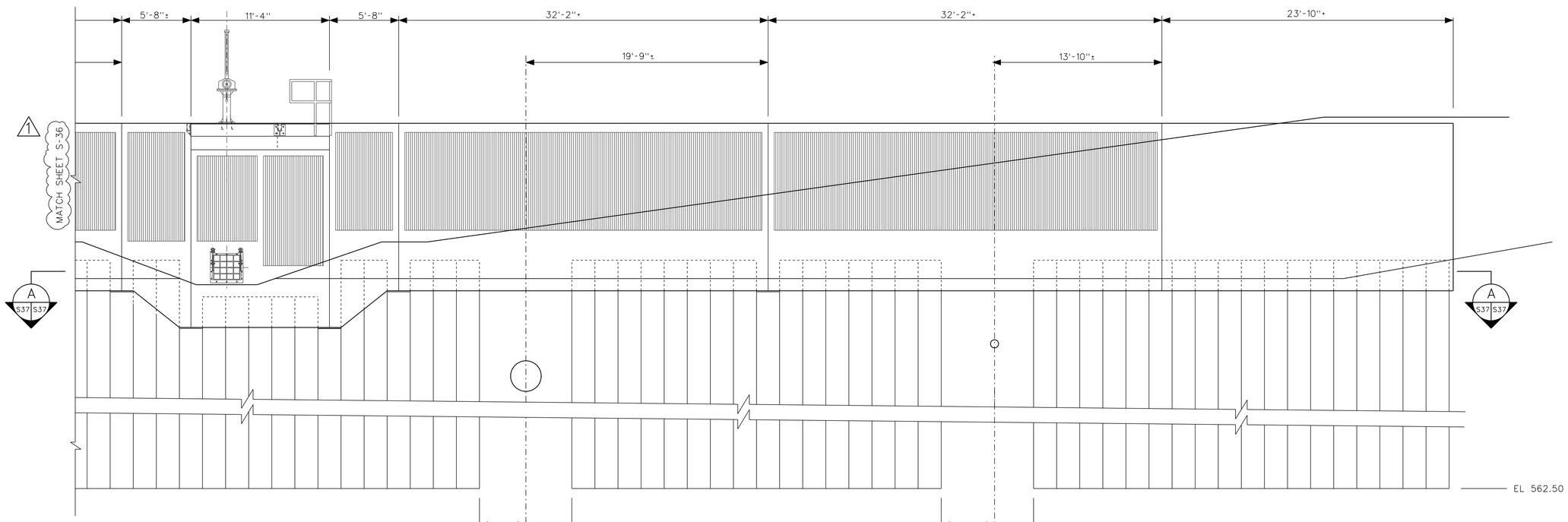

ELEVATION
SCALE: 1/8" = 1'-0"

US Army Corps of Engineers
Chicago District

SYMBOL	SHEET REFERENCES CORRECTIONS AMENDMENT DESCRIPTION	DATE APPROVED	SYMBOL	DESCRIPTION	DATE APPROVED

U.S. ARMY ENGINEER DISTRICT
CORPS OF ENGINEERS
CHICAGO, ILLINOIS

DESIGNED BY: EGS | DATE: AUGUST 2007
DRAWN BY: EGS | SCALE: AS SHOWN
CHECKED BY: JJS | SOLICITATION NUMBER: W912P6-07-B-0006
SUBMITTED BY: STEVE TREHARNE | DATE:

LITTLE CALUMET RIVER, INDIANA
LOCAL FLOOD PROTECTION
STAGE V, PHASE 2
UTILITY CORRIDOR
NORTHEAST SIDE PLAN AND
ELEVATION SHEET 2

SHEET REFERENCE NUMBER:
S-37
SHEET 113 OF 138

PLOT DATE: 8/24/2007
FILENAME: D:\working\dma25162\LRC52-S37A001.dgn

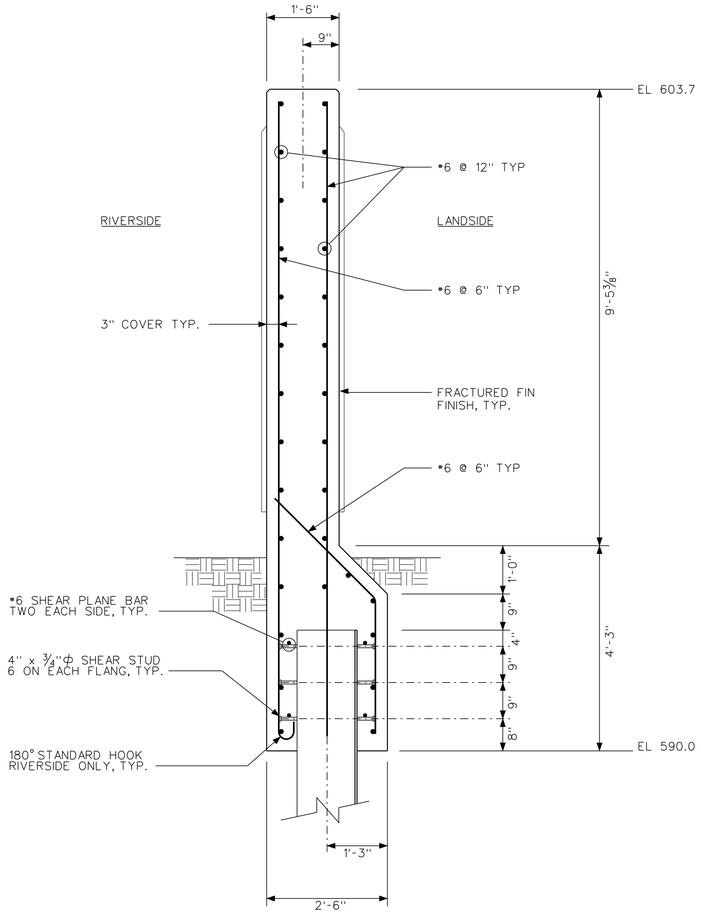

TYPICAL WALL SECTION

SECTION B (S38 | S38)

NTS

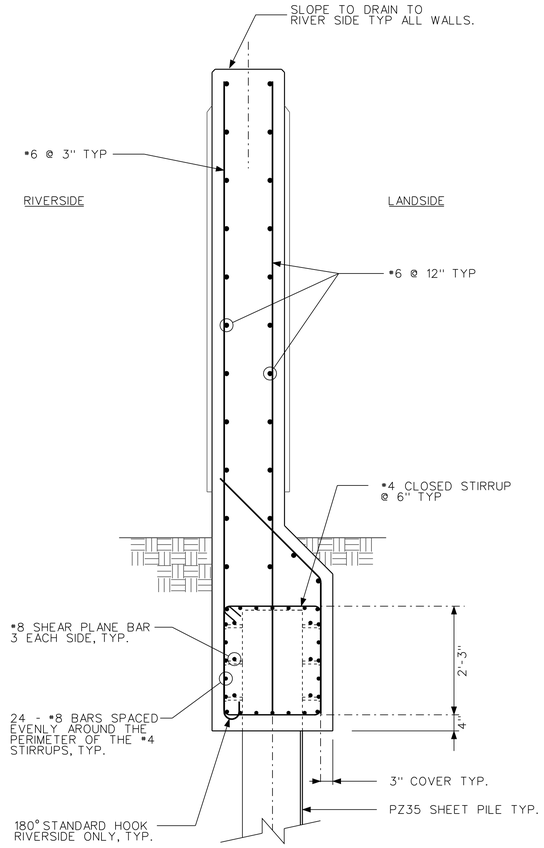

TYPICAL WALL SECTION AT PIPE PASSING

1 SECTION C (S36 | S38)

NTS

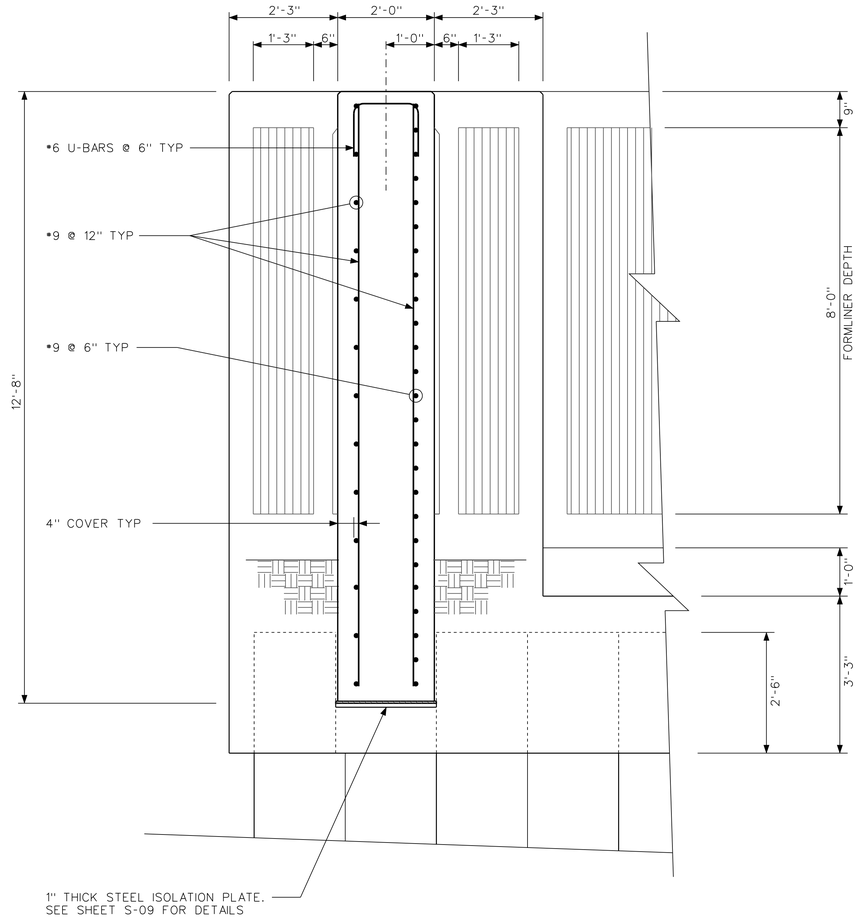

TYPICAL SECTION AT A BRIDGE WALL

1 SECTION D (S36 | S38)

NTS

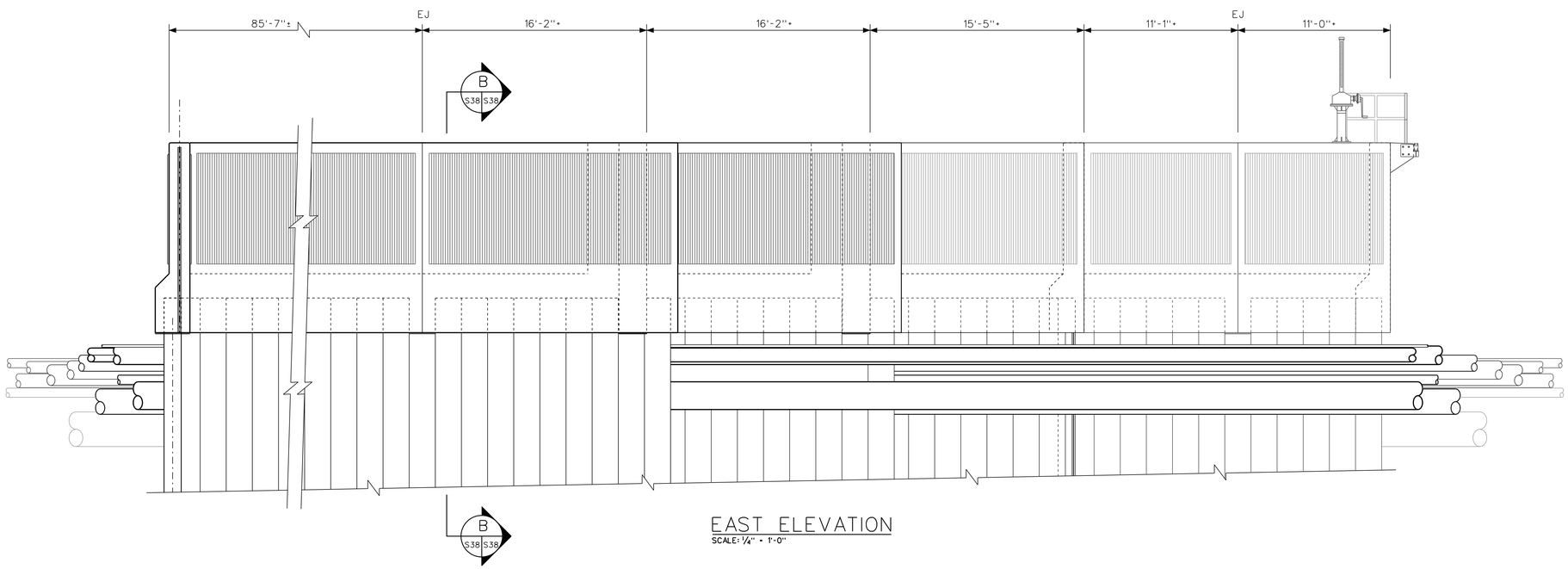

EAST ELEVATION

SCALE: 1/4" = 1'-0"

US Army Corps of Engineers
Chicago District

SYMBOL	SHEET REFERENCES CORRECTIONS AMENDMENT DESCRIPTION	DATE APPROVED	SYMBOL	DESCRIPTION	DATE APPROVED

U.S. ARMY ENGINEER DISTRICT
CORPS OF ENGINEERS
CHICAGO, ILLINOIS

DESIGNED BY: EGS	DATE: AUGUST 2007
DRAWN BY: EGS	SCALE: AS SHOWN
CHECKED BY: JJS	SOLICITATION NUMBER: W912P6-07-B-0006
SUBMITTED BY: STEVE TREHARNE	DATE:

LITTLE CALUMET RIVER, INDIANA
LOCAL FLOOD PROTECTION
STAGE V, PHASE 2
UTILITY CORRIDOR
NORTHEAST SIDE
EAST ELEVATION AND SECTIONS

SHEET REFERENCE NUMBER:

S-38

SHEET 114 OF 138

PLOT DATE: 8/24/2007
FILENAME: D:\working\dms25162\LRC52-538A001.dgn

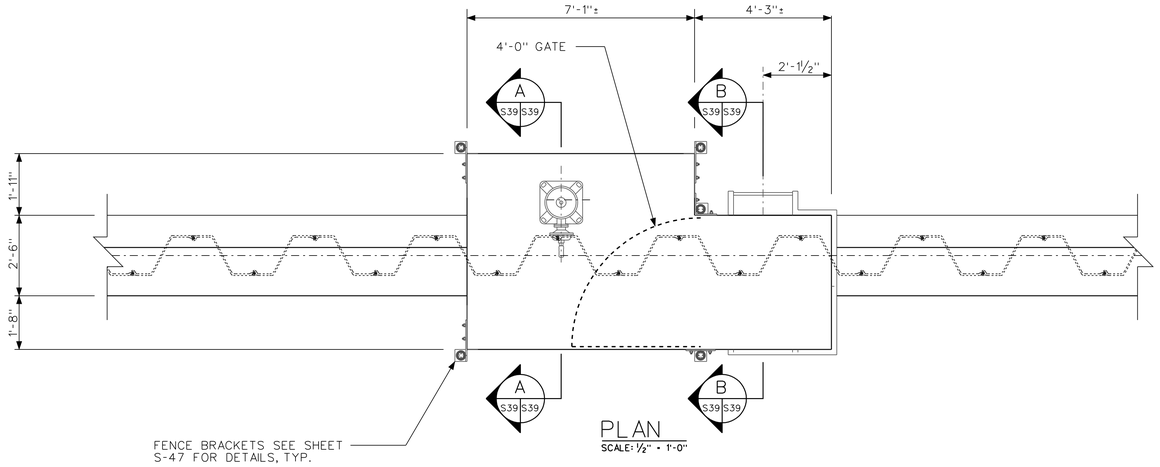

PLAN
SCALE: ½" = 1'-0"

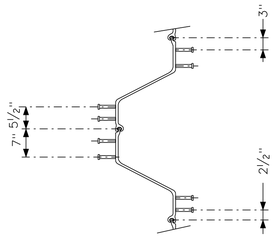

SECTION A-A

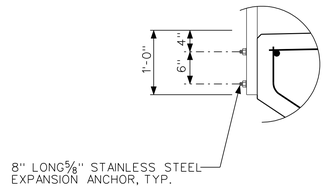

DETAIL 2
NTS
S39 S39

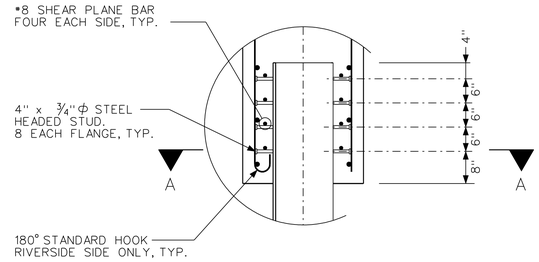

DETAIL 1
NTS
S39 S39

NOTE: FENCE NOT SHOWN FOR CLARITY

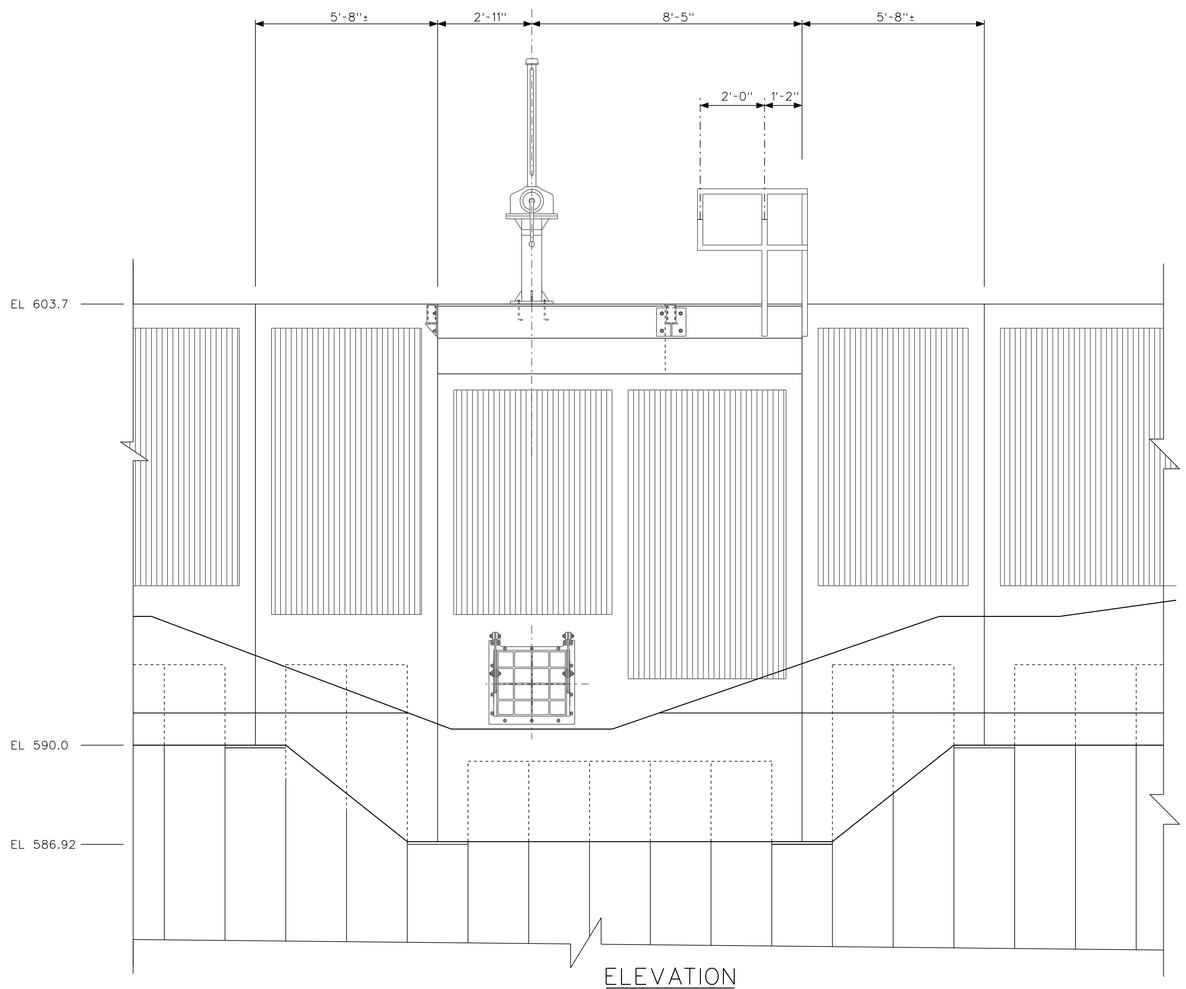

ELEVATION
SCALE: ½" = 1'-0"

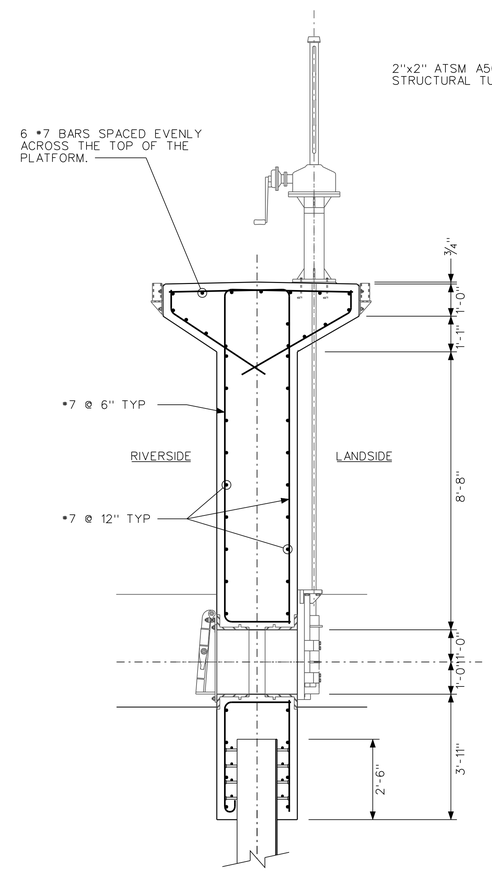

SECTION A
SCALE: ½" = 1'-0"
S39 S39

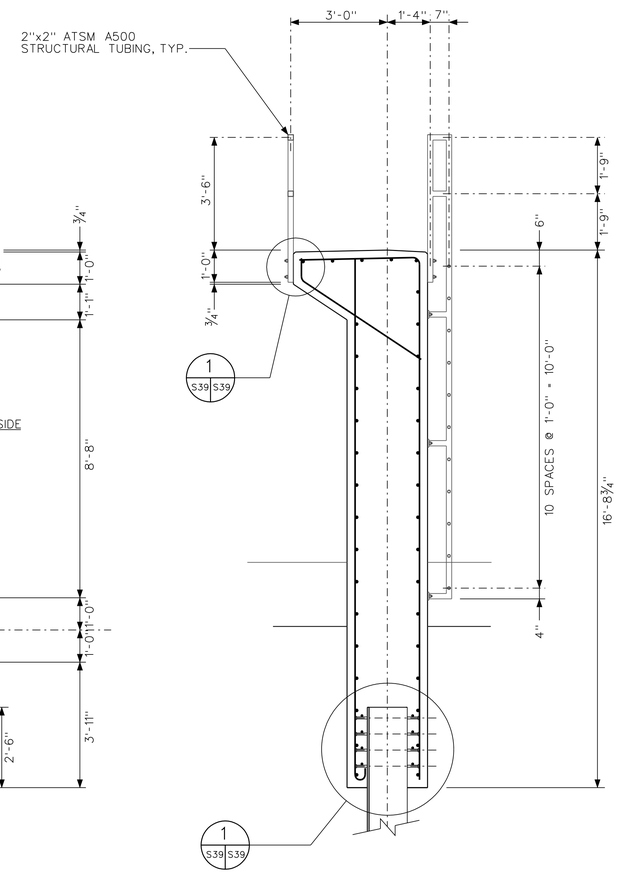

SECTION B
SCALE: ½" = 1'-0"
S39 S39

12 0 1 2 3 4 5
SCALE: ½" = 1'-0"

US Army Corps of Engineers
Chicago District

SYMBOL	MULTIPLE UPDATES SHEET REISSUED AMENDMENT DESCRIPTION	DATE	APPROVED	SYMBOL	DESCRIPTION	DATE	APPROVED

DESIGNED BY: EGS
DRAWN BY: EGS
CHECKED BY: JJS
SUBMITTED BY: STEVE TREHARNE
DATE: AUGUST 2007
SCALE: AS SHOWN
SOLICITATION NUMBER: W912P6-07-B-0006
DATE:

U.S. ARMY ENGINEER DISTRICT
CORPS OF ENGINEERS
CHICAGO, ILLINOIS

LITTLE CALUMET RIVER, INDIANA
LOCAL FLOOD PROTECTION
STAGE V, PHASE 2
UTILITY CORRIDOR
NORTHEAST SIDE
24" CLOSURE STRUCTURE

SHEET REFERENCE NUMBER:
S-39
SHEET 115 OF 138

PLOT DATE: $DATE$
FILENAME: $FILENAME$

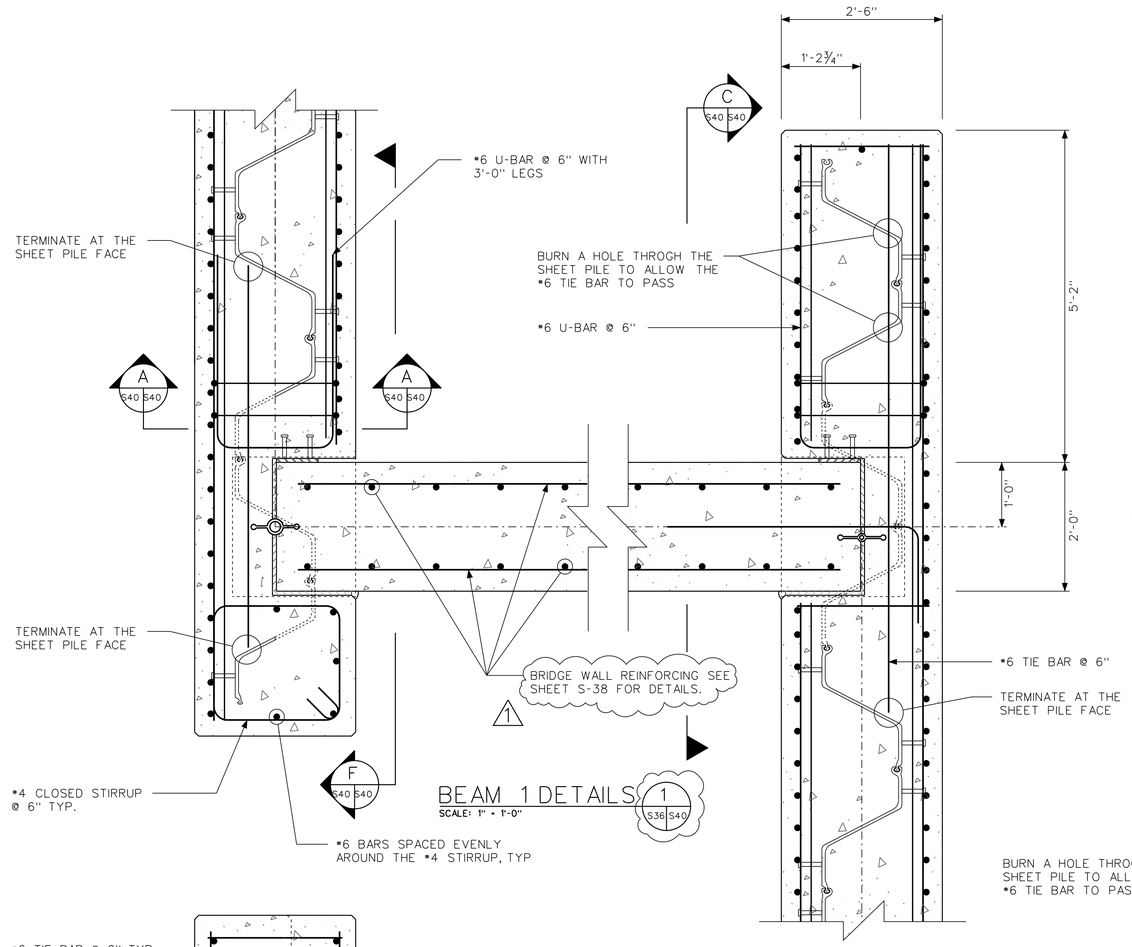

BEAM 1 DETAILS (1 / S36 S40)
SCALE: 1" = 1'-0"

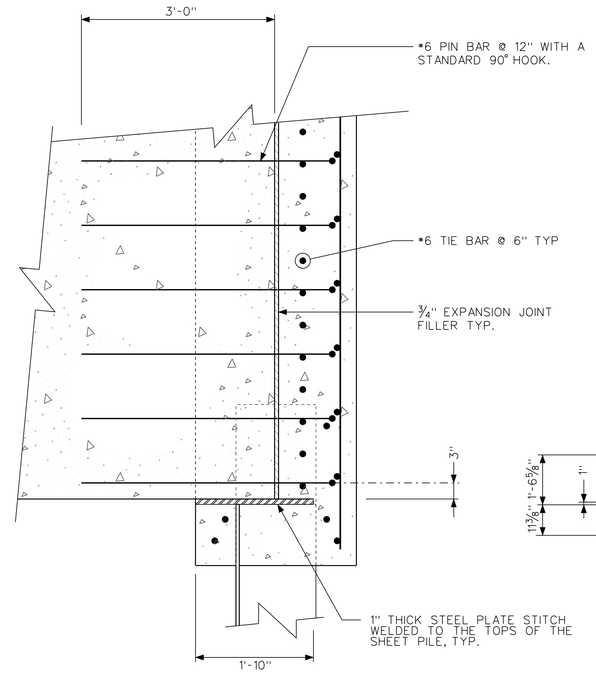

SECTION B (S40 S40)
SCALE: 1" = 1'-0"

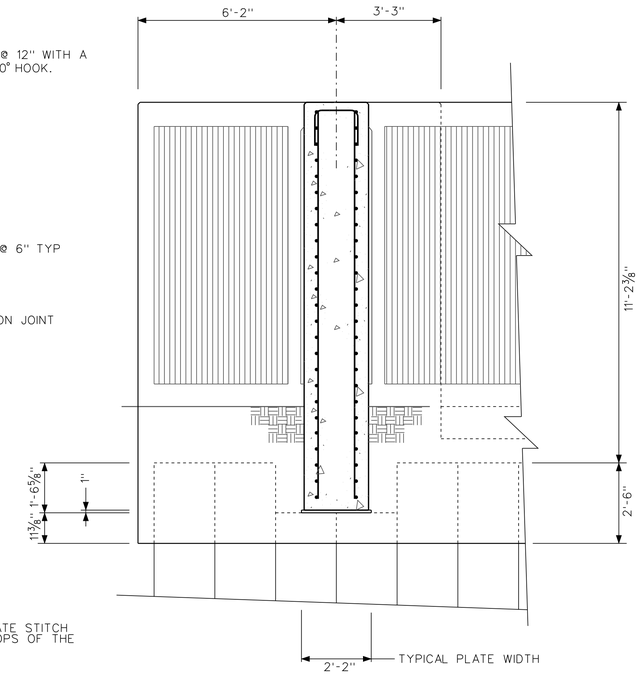

SECTION C E (S40 S40 / S40 S40)
SCALE: ½" = 1'-0"

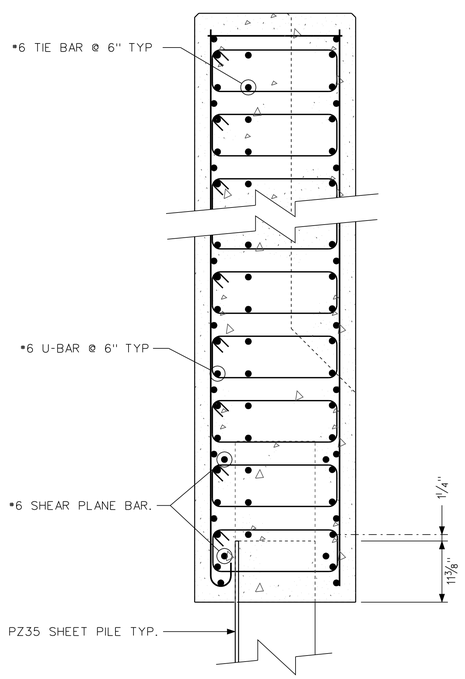

SECTION A (S40 S40)
SCALE: 1" = 1'-0"

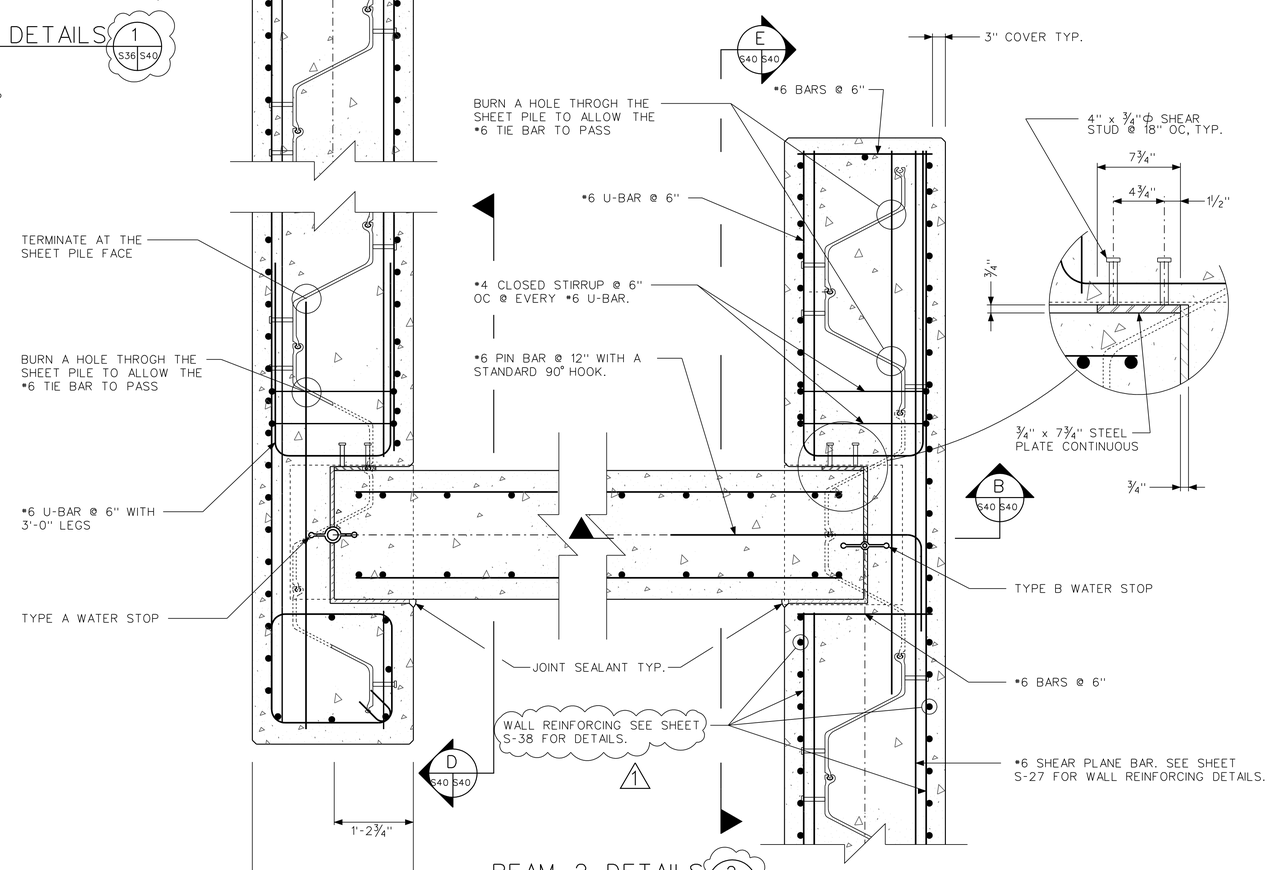

BEAM 2 DETAILS (2 / S36 S40)
SCALE: 1" = 1'-0"

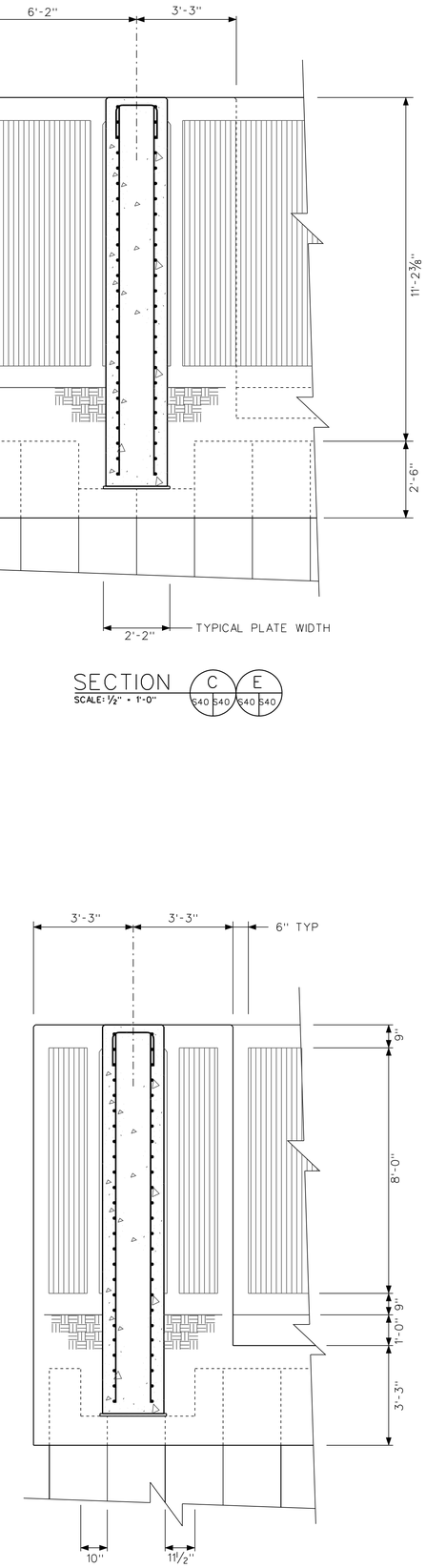

SECTION D F (S40 S40 / S40 S40)
SCALE: ½" = 1'-0"

US Army Corps of Engineers
Chicago District

SYMBOL	SHEET REFERENCES CORRECTIONS AMENDMENT DESCRIPTION	DATE APPROVED	SYMBOL	DESCRIPTION	DATE APPROVED

DESIGNED BY: EGS
DATE: AUGUST 2007
DRAWN BY: EGS
SCALE: AS SHOWN
CHECKED BY: JJS
SOLICITATION NUMBER: W912P6-07-B-0006
SUBMITTED BY: STEVE TREHARNE
DATE:

U.S. ARMY ENGINEER DISTRICT
CORPS OF ENGINEERS
CHICAGO, ILLINOIS

LITTLE CALUMET RIVER, INDIANA
LOCAL FLOOD PROTECTION
STAGE V, PHASE 2

UTILITY CORRIDOR NORTHEAST
SECTIONS AND DETAILS

SHEET REFERENCE NUMBER:
S-40
SHEET 116 OF 138

PLOT DATE: 8/24/2007
FILENAME: D:\working\sm25162\LRC52-S40AMD1.dgn

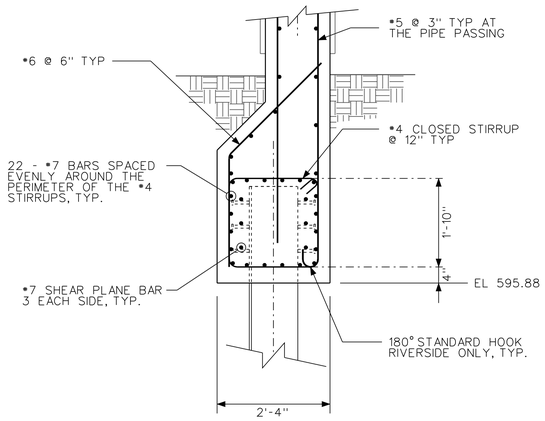

SECTION D
SCALE: 3/4" = 1'-0"
S41 S41

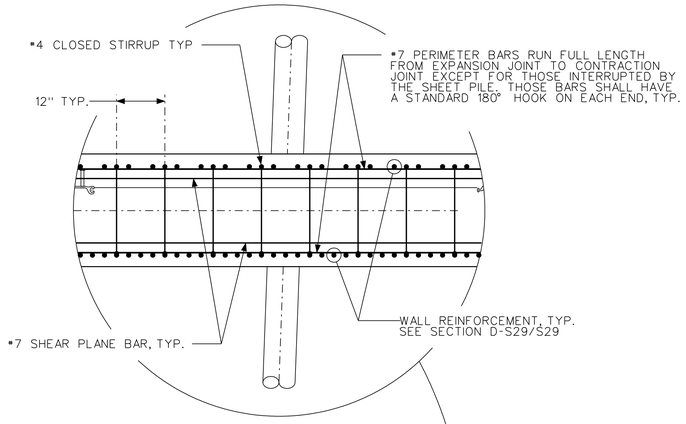

NOTE: THIS DETAIL GOOD FOR BOTH NW PIPE PASSINGS.

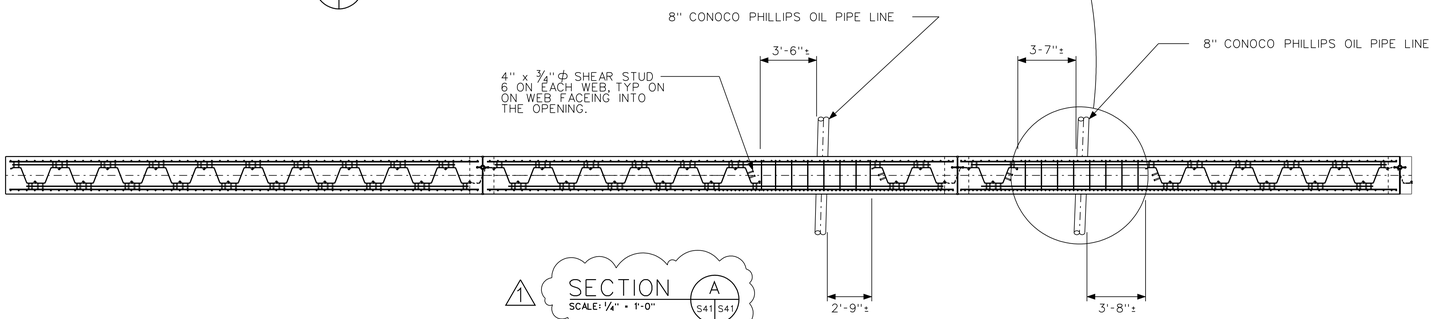

1 SECTION A
SCALE: 1/4" = 1'-0"
S41 S41

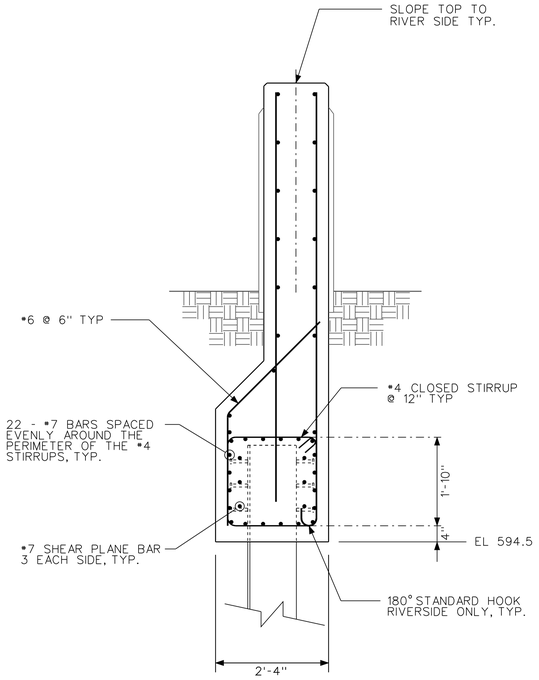

SECTION B
SCALE: 3/4" = 1'-0"
S41 S41

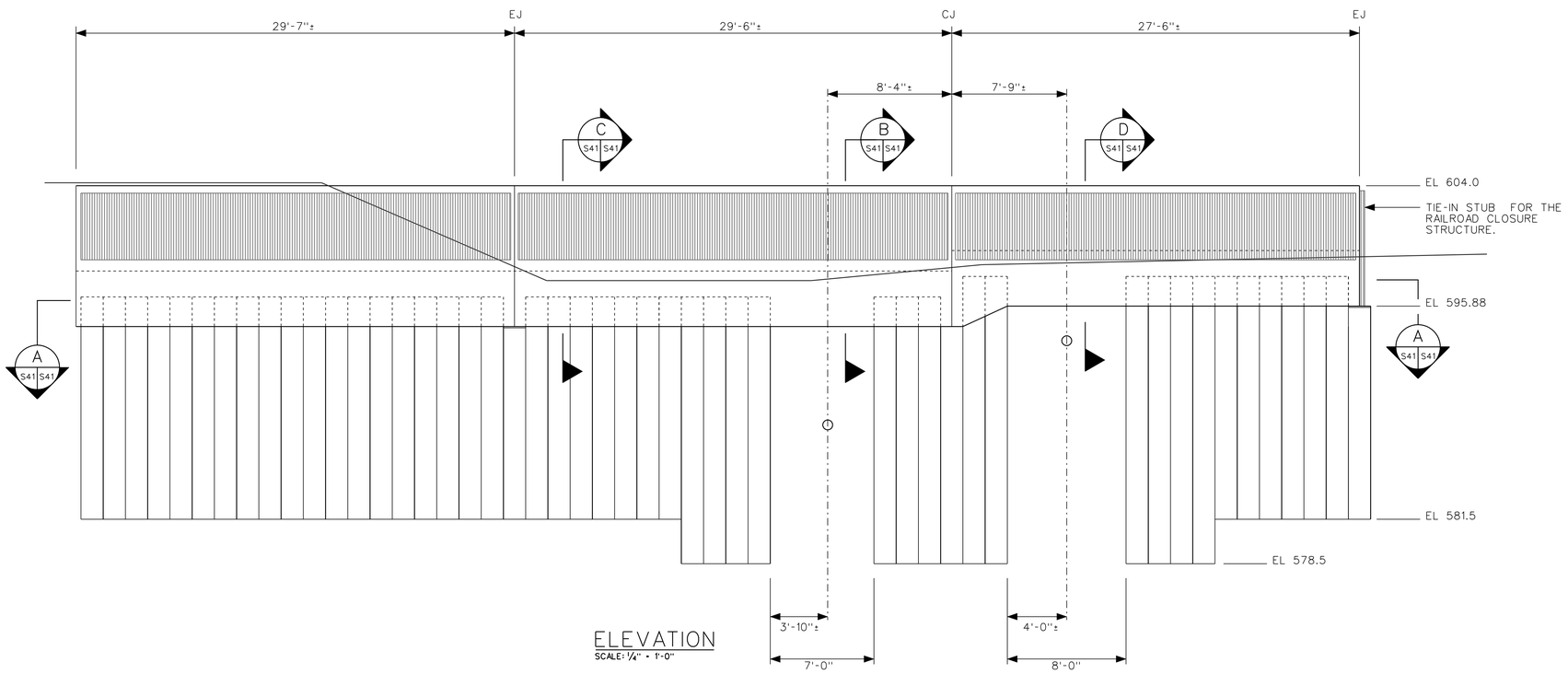

ELEVATION
SCALE: 1/4" = 1'-0"

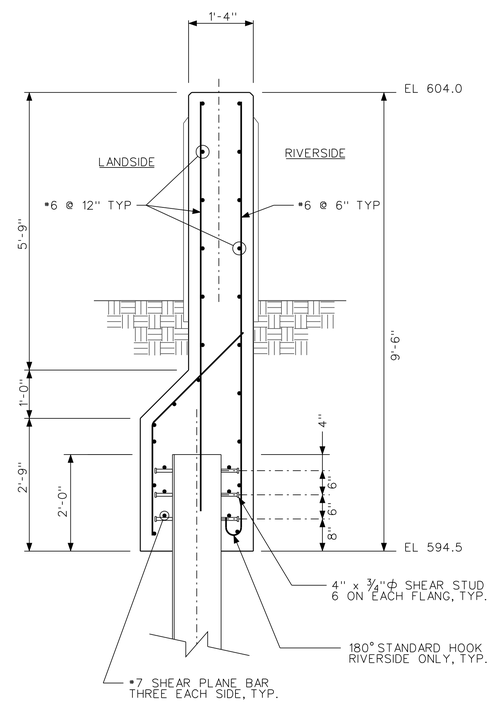

SECTION C
SCALE: 3/4" = 1'-0"
S41 S41

US Army Corps of Engineers
Chicago District

SYMBOL	VIEW NAME UPDATED	DESCRIPTION	DATE	APPROVED	SYMBOL	DESCRIPTION	DATE	APPROVED
	AMENDMENT							

DESIGNED BY: EGS
DATE: AUGUST 2007
DRAWN BY: EGS
SCALE: AS SHOWN
CHECKED BY: JJS
SOLICITATION NUMBER: W912P6-07-B-0006
SUBMITTED BY: STEVE TREHARNE
DATE:

U.S. ARMY ENGINEER DISTRICT
CORPS OF ENGINEERS
CHICAGO, ILLINOIS

LITTLE CALUMET RIVER, INDIANA
LOCAL FLOOD PROTECTION
STAGE V, PHASE 2
UTILITY CORRIDOR
NORTHWEST SIDE
PLAN, ELEVATION AND SECTION

SHEET REFERENCE NUMBER:
S-41
SHEET 117 OF 138

PLOT DATE: 8/24/2007
FILENAME: D:\working\sm25152\LRC52-S41A001.dgn

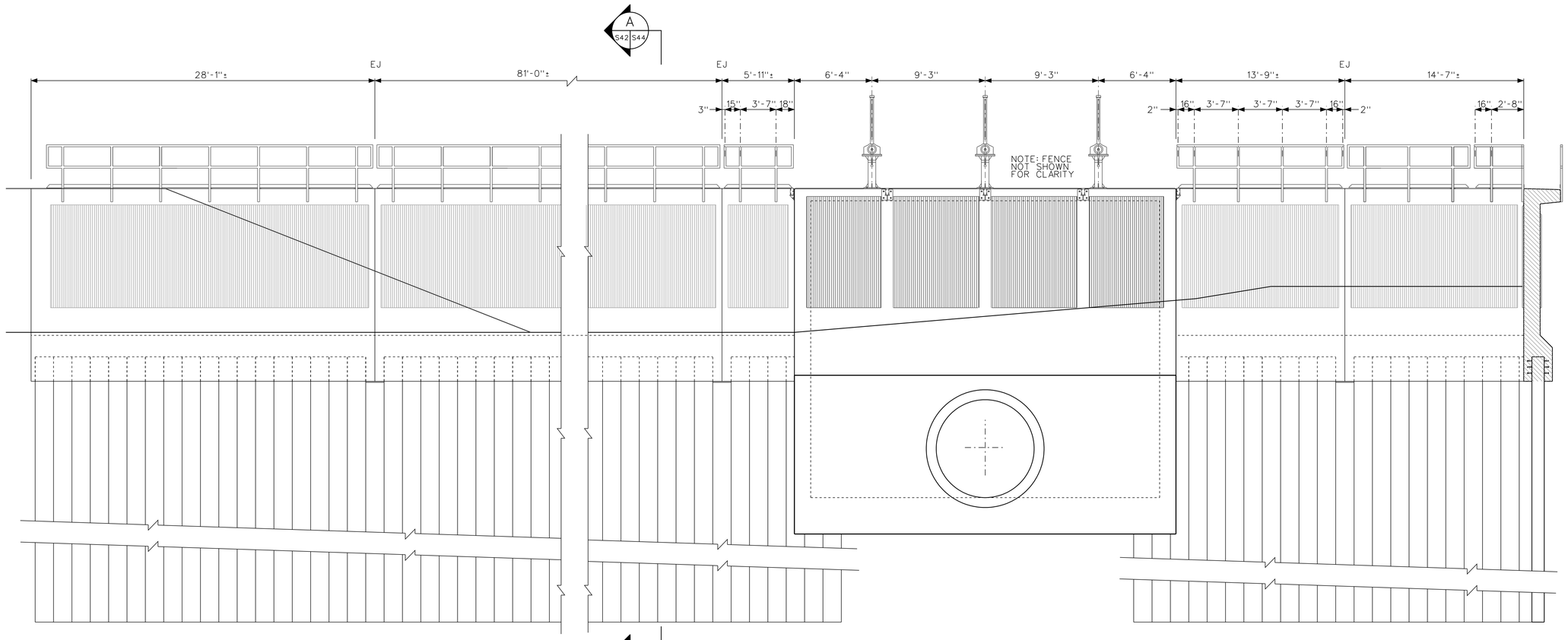

NORTH ELEVATION

SCALE: 1/4" = 1'-0"

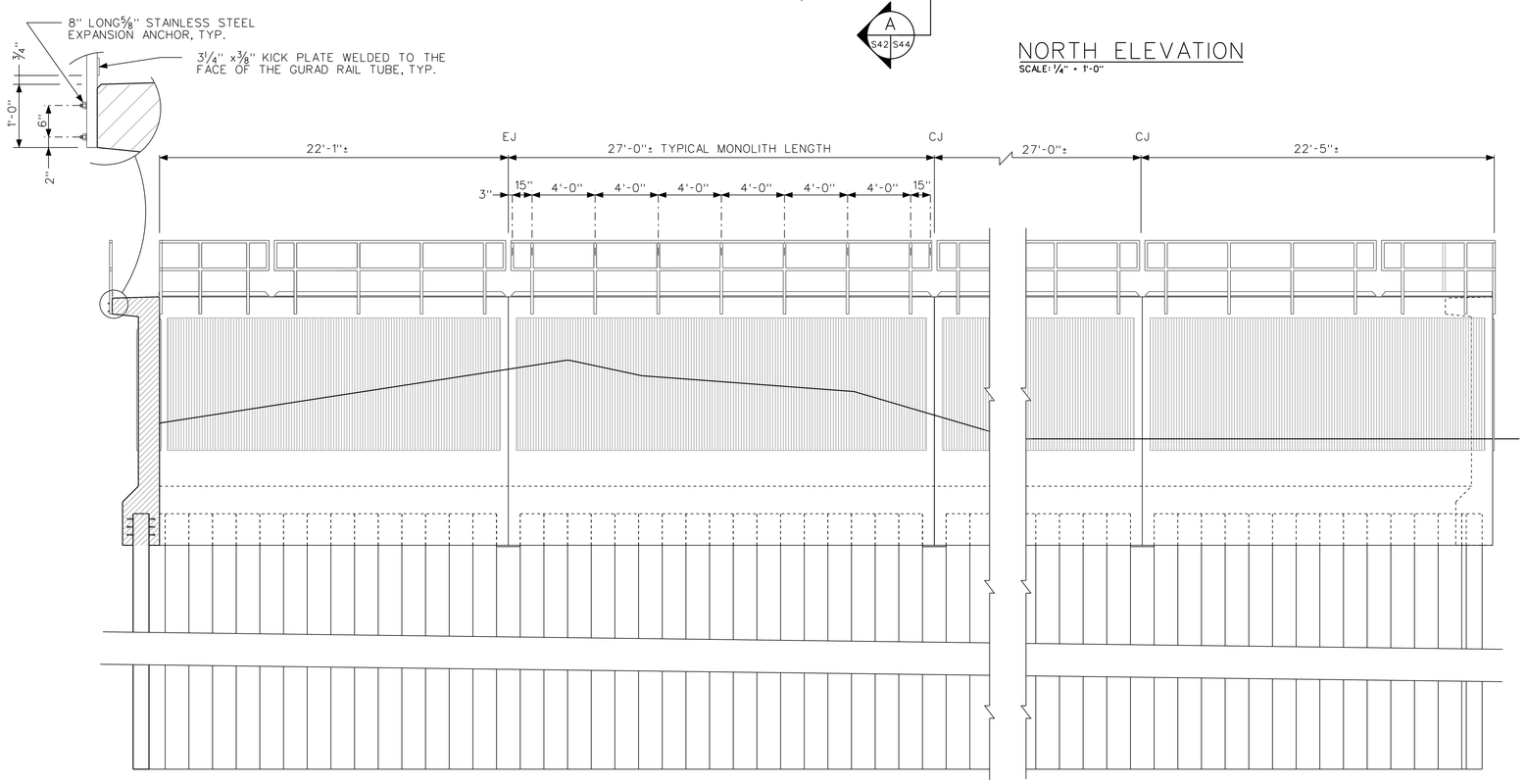

EAST ELEVATION

SCALE: 1/4" = 1'-0"

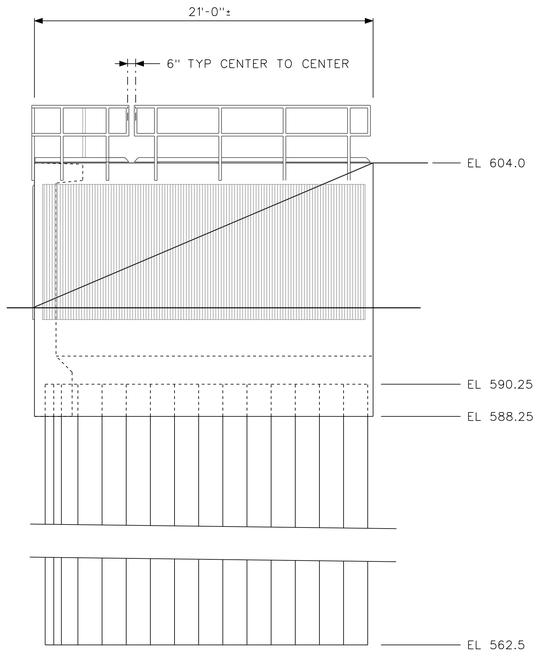

RETURN WALL ELEVATION

SCALE: 1/4" = 1'-0"

US Army Corps of Engineers
Chicago District

SYMBOL	DESCRIPTION	DATE	APPROVED	SYMBOL	DESCRIPTION	DATE	APPROVED
1	MULTIPLE UPDATES SHEET REISSUED AMENDMENT DESCRIPTION						

DESIGNED BY: EGS
DRAWN BY: EGS
CHECKED BY: JJS
SUBMITTED BY: STEVE TREHARNE
DATE: AUGUST 2007
SCALE: AS SHOWN
SOLICITATION NUMBER: W912P6-07-B-0006
DATE:

U.S. ARMY ENGINEER DISTRICT
CORPS OF ENGINEERS
CHICAGO, ILLINOIS

LITTLE CALUMET RIVER, INDIANA
LOCAL FLOOD PROTECTION
STAGE V, PHASE 2

INDIANAPOLIS PUMP STATION 96"
GATEWELL I-WALL ELEVATION

SHEET REFERENCE NUMBER:
S-42

PLOT DATE: $DATE$
FILENAME: $FILENAME$

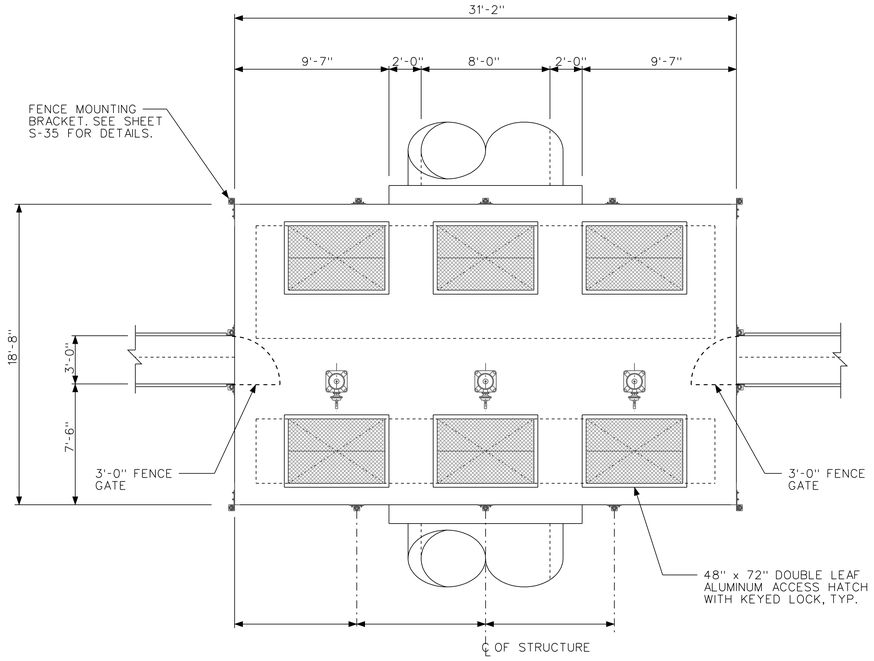

PLAN
SCALE: 1/4" = 1'-0"

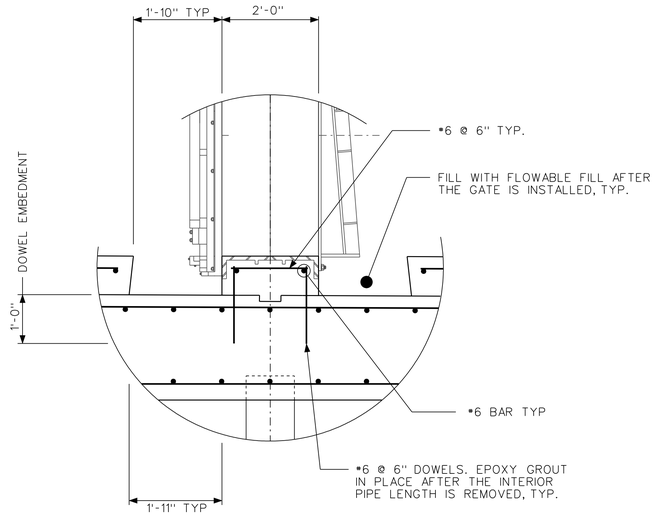

DETAIL 2 (S44 | S43)
SCALE: 3/4" = 1'-0"

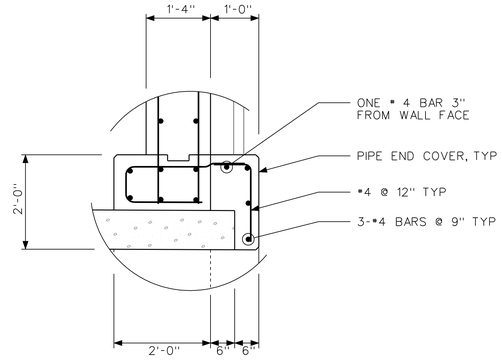

DETAIL 1 (S44 | S43)
SCALE: 3/4" = 1'-0"

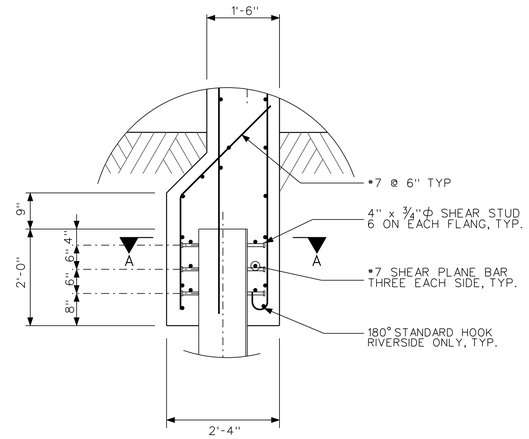

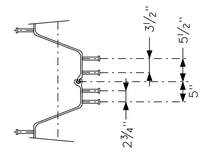

SECTION A-A

DETAIL 1 (S43 | S44)
SCALE: 3/4" = 1'-0"

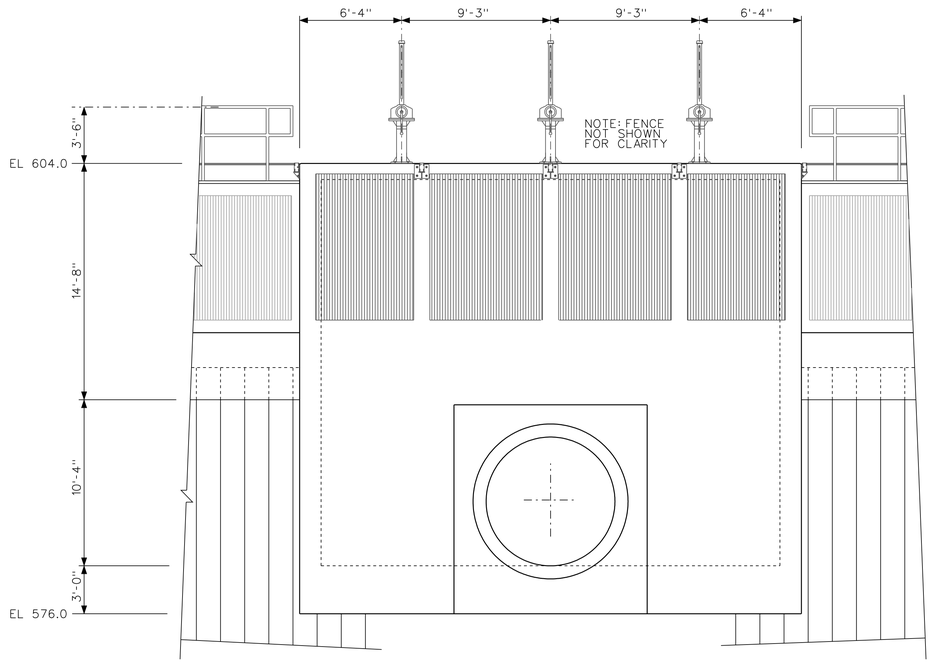

ELEVATION
SCALE: 1/4" = 1'-0"

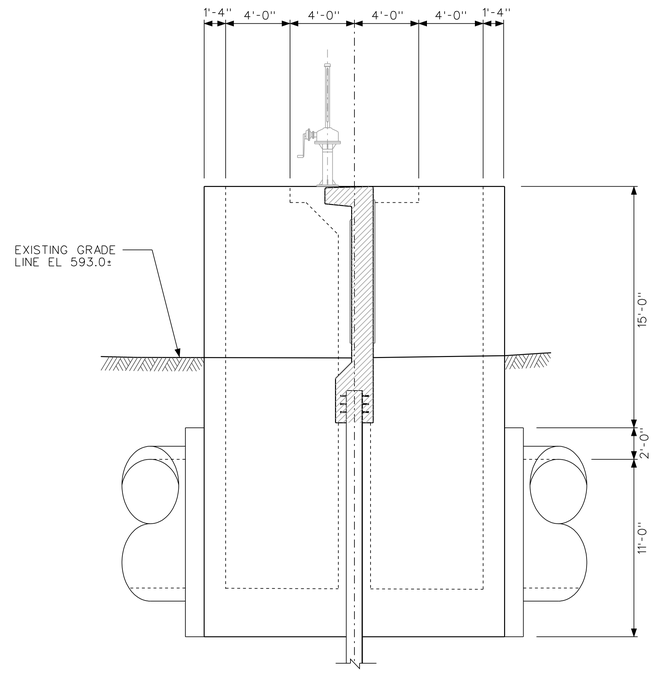

SIDE ELEVATION
SCALE: 1/4" = 1'-0"

1. THE SCHEDULE FOR ALL WORK ON THIS STRUCTURE SHALL BE COORDINATED WITH THE HAMMOND SANITARY DISTRICT AND PUMP STATION OPERATORS. THE HAMMOND SANITARY DISTRICT SHALL BE CONTACTED AT LEAST 14 CALENDAR DAYS PRIOR TO START OF WORK ON THIS STRUCTURE. PROOF OF CONTACT SHALL BE PROVIDED TO THE GOVERNMENT AT LEAST 10 CALENDAR DAYS PRIOR TO START OF WORK ON THIS STRUCTURE. WORK ON THIS STRUCTURE CANNOT PROCEED WITHOUT THIS PROOF OF CONTACT. THE HAMMOND SANITARY DISTRICT MUST BE NOTIFIED AND MUST PROVIDE APPROVAL PRIOR TO REMOVAL OF THE EXISTING PIPE IN CASE THEY NEED TO MAKE ANY OPERATIONAL CHANGES. THE EXISTING PIPE CANNOT BE REMOVED UNTIL PROOF OF THIS NOTIFICATION AND APPROVAL BY THE HAMMOND SANITARY DISTRICT HAS BEEN SUBMITTED TO THE GOVERNMENT.

2. THE CONTRACTOR SHALL CONSTRUCT THE BASE SLAB AND THE OUTER WALLS OF THE STRUCTURE WITH THE PIPE REMAINING IN PLACE, INTACT AND IN SERVICE. CARE SHALL BE TAKEN TO NOT DAMAGE OR MOVE THE EXISTING PIPE.

3. AFTER THE BASE SLAB AND OUTER WALLS ARE IN PLACE THE CONTRACTOR SHALL REMOVE THE PIPE LENGTH CONTAINED IN THE STRUCTURE TO WITHIN 6 INCHES OF THE OUTER WALLS. THE CONTRACTOR SHALL THEN FINISH THE INTERIOR FEATURES OF THE STRUCTURE, INCLUDING INSTALLATION OF THE GATES, AND THE REST OF THE STRUCTURE.

4. THE CONTRACTOR SHALL CHECK THE WEATHER FORECAST FOR THE DAY THE INTERIOR PIPE REMOVAL IS ANTICIPATED AND THE CONTRACTOR SHALL NOT PLAN ON REMOVING THE PIPE SECTIONS ON DAYS WHEN THE FORECAST CALLS FOR RAIN.

US Army Corps of Engineers
Chicago District

SYMBOL	AMENDMENT DESCRIPTION	DATE	APPROVED	SYMBOL	DESCRIPTION	DATE	APPROVED
1	MULTIPLE UPDATES SHEET REISSUED						

DESIGNED BY: EGS
DRAWN BY: EGS
CHECKED BY: JJS
SUBMITTED BY: STEVE TREHARNE
DATE: AUGUST 2007
SCALE: AS SHOWN
SOLICITATION NUMBER: W912P6-07-B-0006
DATE:

U.S. ARMY ENGINEER DISTRICT
CORPS OF ENGINEERS
CHICAGO, ILLINOIS

LITTLE CALUMET RIVER, INDIANA
LOCAL FLOOD PROTECTION
STAGE V, PHASE 2
INDIANAPOLIS PUMP STATION 96"
GATEWELL PLAN, ELEVATION, AND SECTION

SHEET REFERENCE NUMBER:
S-43
SHEET 119 OF 138

PLOT DATE: 8/24/2007
FILENAME: D:\working\dms25162\LRC52-S43A001.dgn

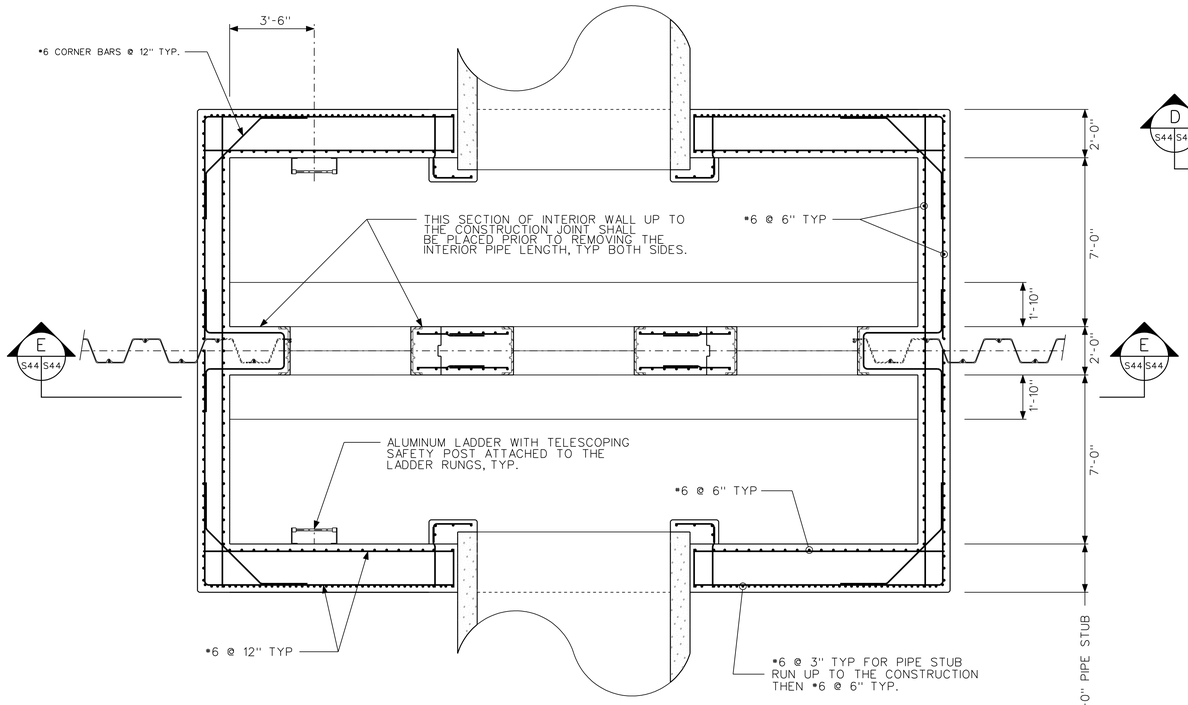

SECTION B S44 S44
SCALE: 3/8" = 1'-0"

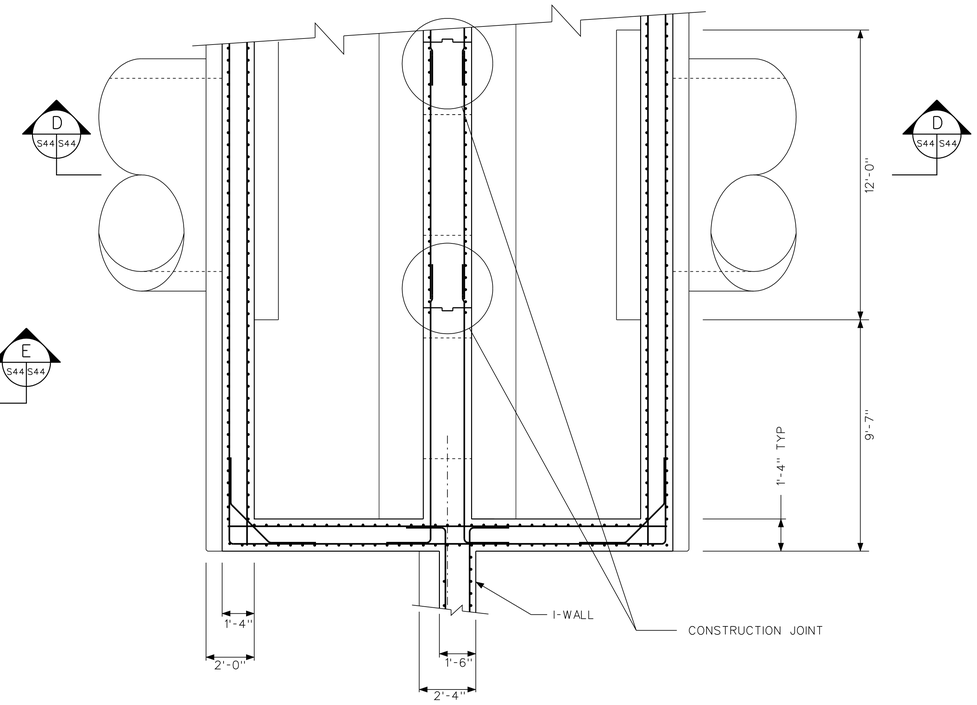

SECTION C S44 S44
SCALE: 3/8" = 1'-0"

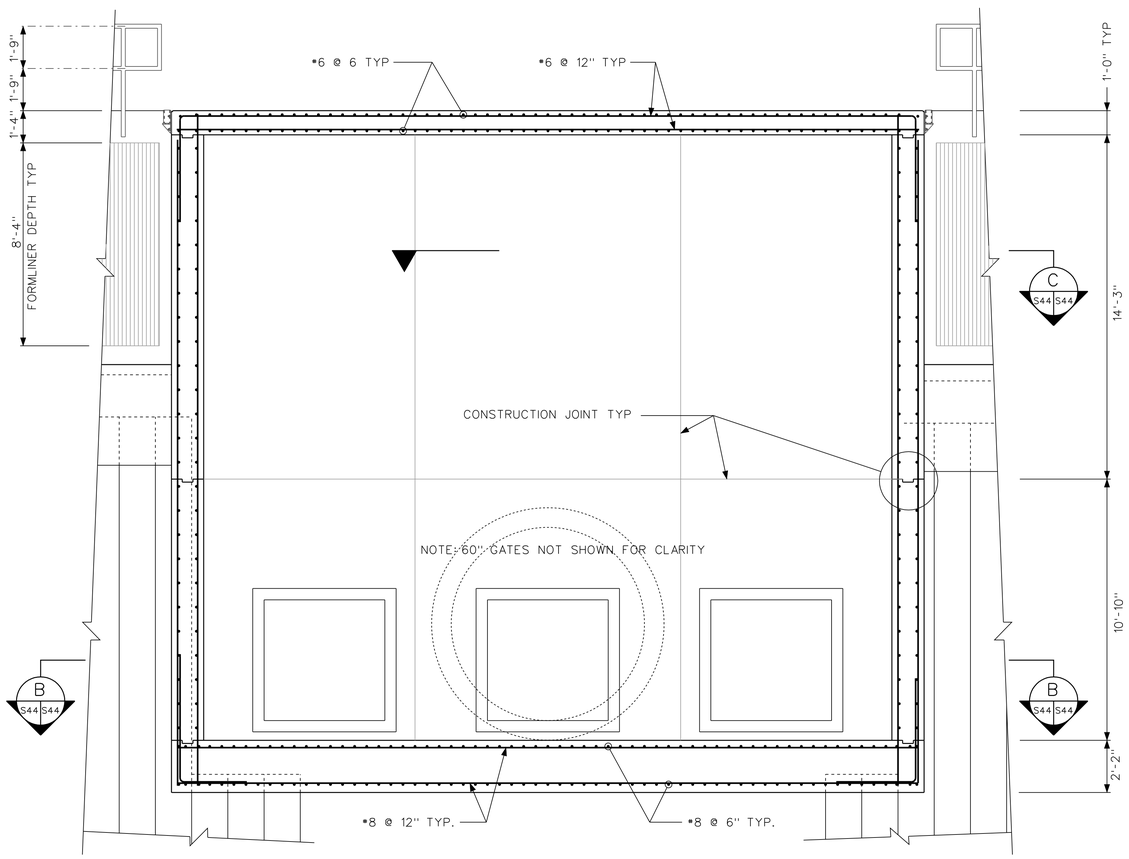

SECTION E S44 S44
SCALE: 3/8" = 1'-0"

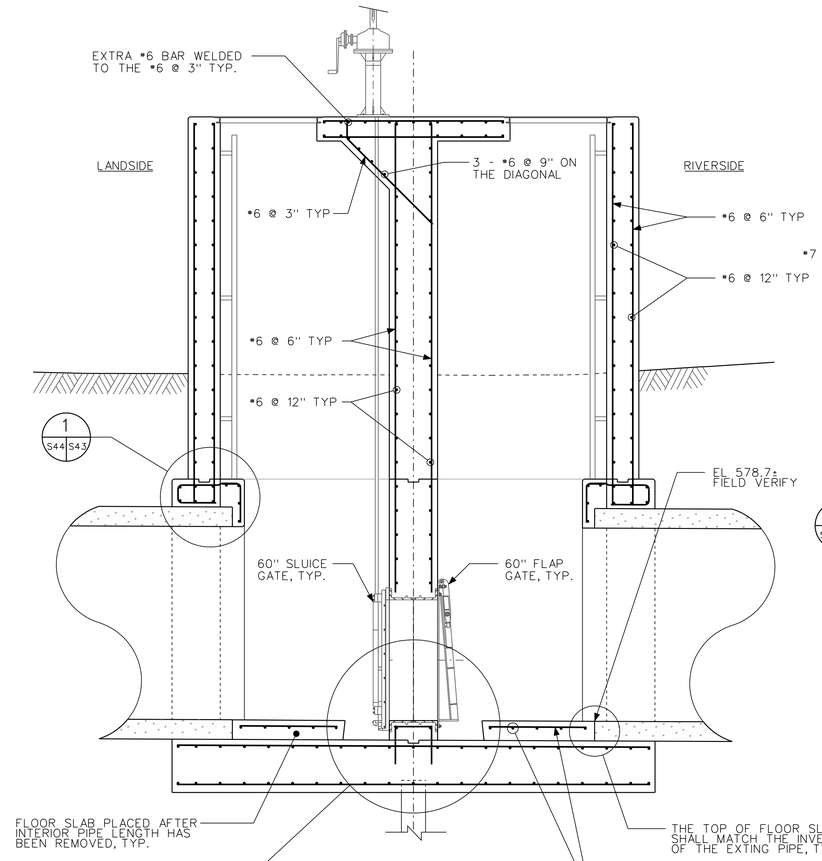

SECTION D S44 S44
SCALE: 3/8" = 1'-0"

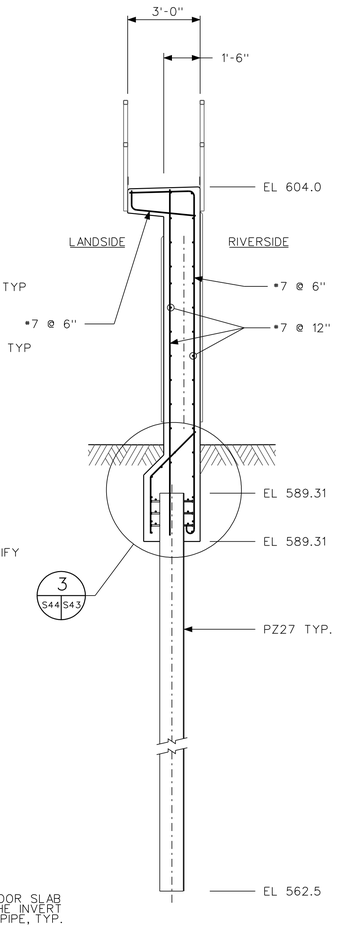

SECTION A S42 S44
SCALE: 3/8" = 1'-0"

US Army Corps of Engineers
Chicago District

SYMBOL	DESCRIPTION	DATE	APPROVED	SYMBOL	DESCRIPTION	DATE	APPROVED
1	MULTIPLE UPDATES SHEET REISSUED						
	AMENDMENT DESCRIPTION						

DESIGNED BY: ECGS
DATE: AUGUST 2007
DRAWN BY: ECGS
SCALE: AS SHOWN
CHECKED BY: JJS
SOLICITATION NUMBER: W912P6-07-B-0006
SUBMITTED BY: STEVE TREHARNE
DATE:

U.S. ARMY ENGINEER DISTRICT
CORPS OF ENGINEERS
CHICAGO, ILLINOIS

LITTLE CALUMET RIVER, INDIANA
LOCAL FLOOD PROTECTION
STAGE V, PHASE 2
INDIANAPOLIS PUMP STATION
96" GATEWELL
SECTIONS AND DETAILS

SHEET REFERENCE NUMBER:
S-44
SHEET 120 OF 138

PLOT DATE: 8/24/2007
FILENAME: D:\work\rp\dms25\62\LRC52-S44-M01.dgn

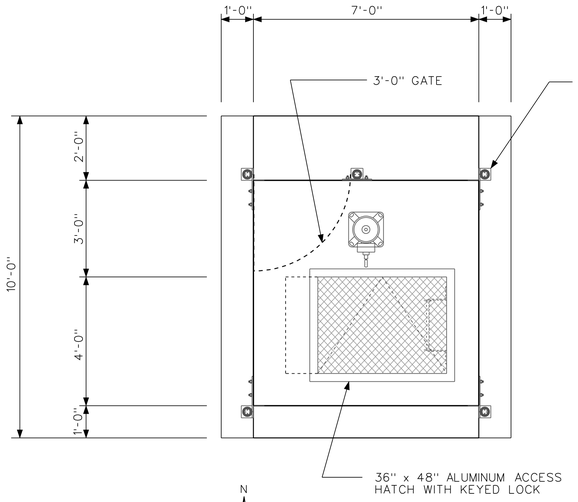

PLAN
SCALE: 1/2" = 1'-0"

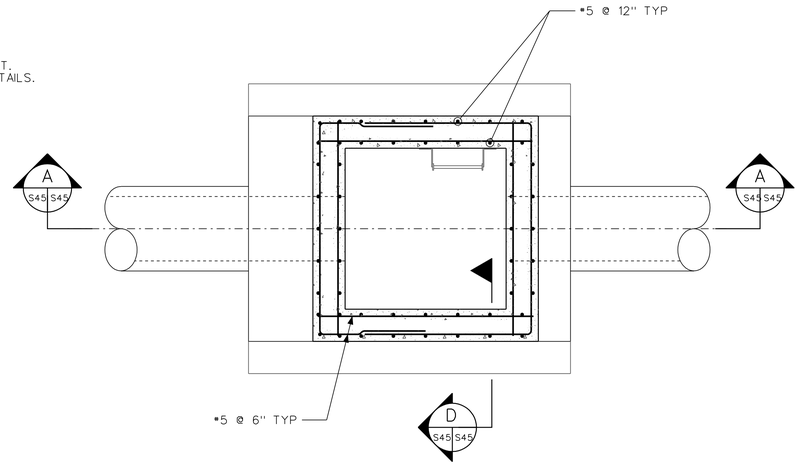

SECTION B S45 S45
SCALE: 1/2" = 1'-0"

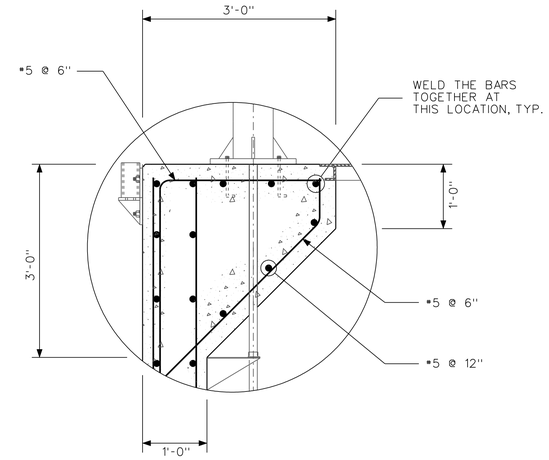

DETAIL 1 S45 S45
SCALE: 1" = 1'-0"

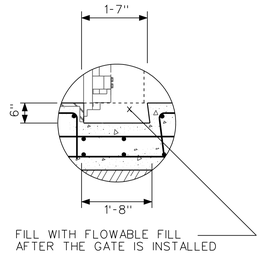

DETAIL 4 S45 S45
SCALE: 1/2" = 1'-0"

NOTES:

1. ALL REINFORCING CLEAR COVER SHALL BE 2" TYP ON MEMBERS 12" THICK OR LESS AND SHALL BE 3" TYP ON MEMBERS GREATER THAN 12" THICK UNLESS OTHERWISE NOTED.

2. HOT DIP GALVANIZE ALL METAL FABRICATIONS AFTER FABRICATION UNLESS OTHERWISE NOTED. FIELD VERIFY ALL DIMENSIONS PRIOR TO FABRICATION.

3. SEE SHEET C-46 FOR GATEWELL PROFILE.

4. SEE SHEET S-34 FOR STANDARD CONCRETE DETAILS.

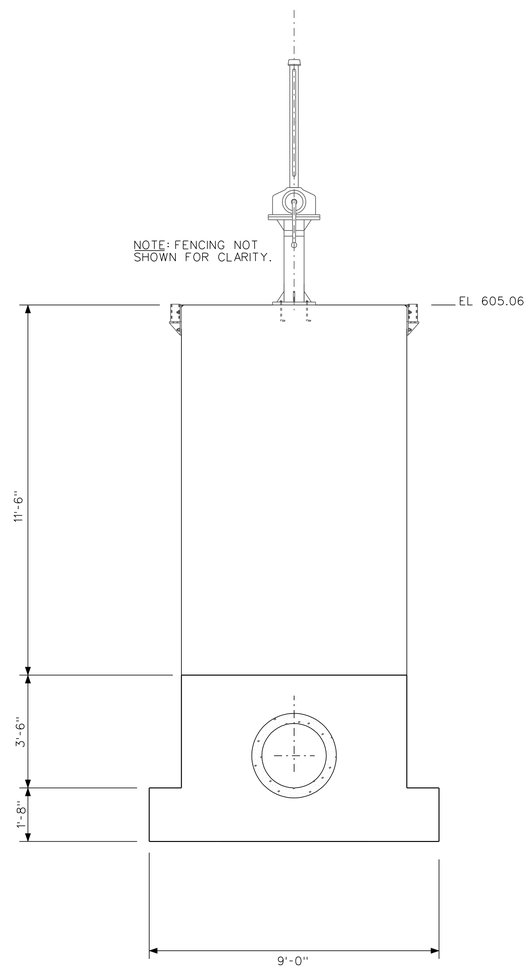

ELEVATION
SCALE: 1/2" = 1'-0"

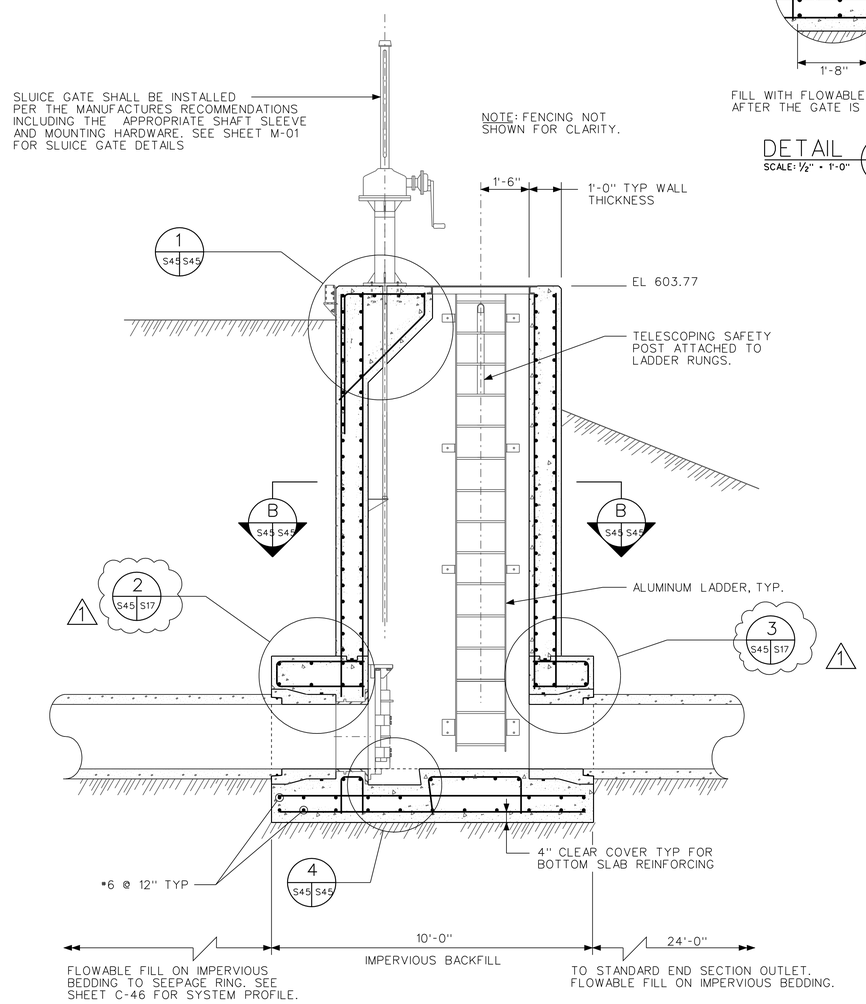

SECTION A S45 S45
SCALE: 1/2" = 1'-0"

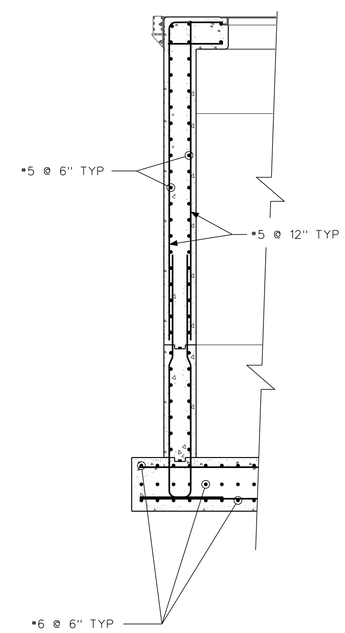

SECTION D S45 S45
SCALE: 1/2" = 1'-0"

12 0 1 2 3 4 5
SCALE: 1/2" = 1'-0"

US Army Corps of Engineers
Chicago District

SYMBOL	SHEET REFERENCES CORRECTIONS AMENDMENT DESCRIPTION	DATE APPROVED	SYMBOL	DESCRIPTION	DATE APPROVED
1					

DESIGNED BY: EGS
DATE: AUGUST 2007
DRAWN BY: EGS
SCALE: AS SHOWN
CHECKED BY: JJS
SOLICITATION NUMBER: W912P6-07-B-0006
SUBMITTED BY: STEVE TREHARNE
DATE:

U.S. ARMY ENGINEER DISTRICT
CORPS OF ENGINEERS
CHICAGO, ILLINOIS

LITTLE CALUMET RIVER, INDIANA
LOCAL FLOOD PROTECTION
STAGE V, PHASE 2

24" GATEWELL, 6-5C PLAN, ELEVATION AND SECTIONS

SHEET REFERENCE NUMBER:
S-45

PLOT DATE: 8/24/2007
FILENAME: D:\working\sms25162\LRC52-S45AM01.dgn

LAP SPLICE LENGTH (in)

TABLE 2	f'c=4000 psi		fy=60,000 psi	
BAR SIZE	TENSION BARS		COMPRESSION BARS	
	TOP BARS	OTHER BARS	NOT ENCLOSED	ENCLOSED WITH SPIRALS OR TIES
#3	14	14	12	12
#4	24	18	15	12
#5	30	23	19	14
#6	36	28	23	17
#7	42	32	26	20
#8	51	39	30	23
#9	64	49	34	25
#10	81	63	38	29
#11	100	77	42	32

BAR DEVELOPMENT LENGTH (in)

TABLE 1	f'c=4000 psi		fy=60,000 psi	
BAR SIZE	TENSION BARS		COMPRESSION BARS	
	TOP BARS	OTHER BARS	NOT ENCLOSED	ENCLOSED WITH SPIRALS OR TIES
#3	14	12	8	8
#4	18	14	10	8
#5	23	18	12	9
#6	28	21	14	11
#7	32	25	17	12
#8	39	30	19	14
#9	49	38	21	15
#10	63	48	24	18
#11	77	59	27	20

GENERAL CONCRETE NOTES:

1. TOP BARS ARE HORIZONTAL BARS IN THE TOP FACE LAYER(S) OF BEAMS AND SLABS, SO PLACED THAT MORE THAN 12 INCHES OF FRESH CONCRETE IS CAST BELOW THE DEVELOPMENT LENGTH OR SPLICE. ALL OTHER HORIZONTAL AND VERTICAL BARS IN BEAMS, SLABS, COLUMNS AND WALLS SHALL BE CLASSIFIED AS OTHER BARS, UNLESS OTHERWISE NOTED ON THE DRAWINGS.
2. LAP SPLICES SHALL NOT BE USED IN LOCATION OF MAXIMUM MOMENTS UNLESS OTHERWISE PERMITTED ON THE DRAWINGS.
3. REINFORCEMENT SHALL HAVE A MINIMUM CONCRETE COVER OF 3", EXCEPT AS OTHERWISE NOTED OR SHOWN ON THE DRAWINGS.
4. ALL EXPOSED CONCRETE EDGES SHALL HAVE A 3/4" CHAMFER.
5. ABBREVIATIONS: d_b - BAR DIAMETER; ldh - DEVELOPMENT LENGTH WITH HOOK

VALUES OF ldh (in)

TABLE 3	fy=60,000 psi
BAR SIZE	f'c=4000 psi
#3	6
#4	7
#5	8
#6	10
#7	12
#8	13
#9	15
#10	17
#11	19
#14	32
#18	43

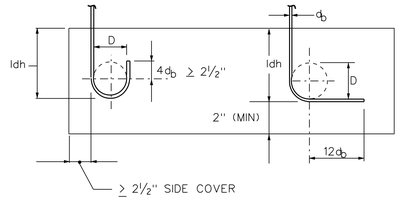

STANDARD END HOOK
TENSION DEVELOPMENT LENGTH
NTS

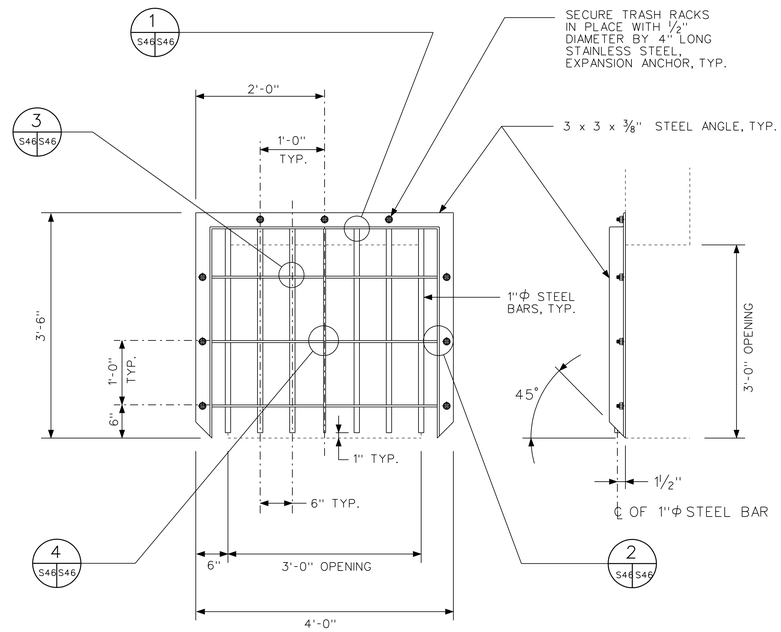

GATEWELL TRASH RACK DETAILS
NTS

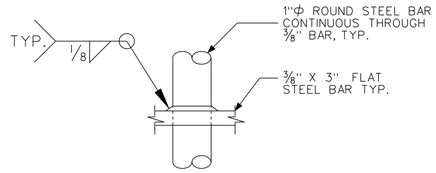

INTERIOR BAR DETAIL (3 / S46 S46)
NTS

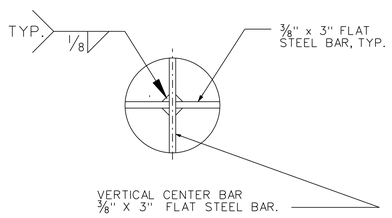

CENTER BAR DETAIL (4 / S46 S46)
NTS

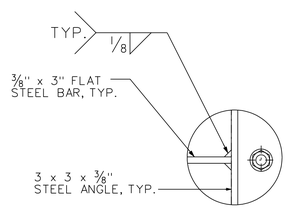

SIDE BAR DETAIL (2 / S46 S46)
NTS

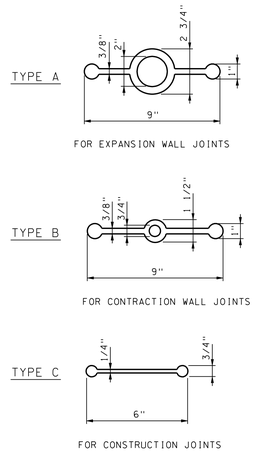

WATERSTOP DETAILS
NTS

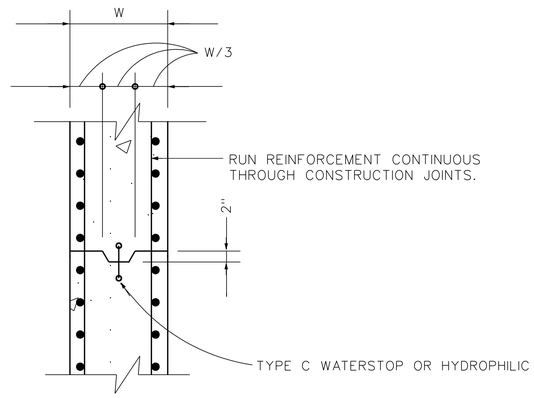

TYPICAL KEYED CONSTRUCTION JOINT
NTS

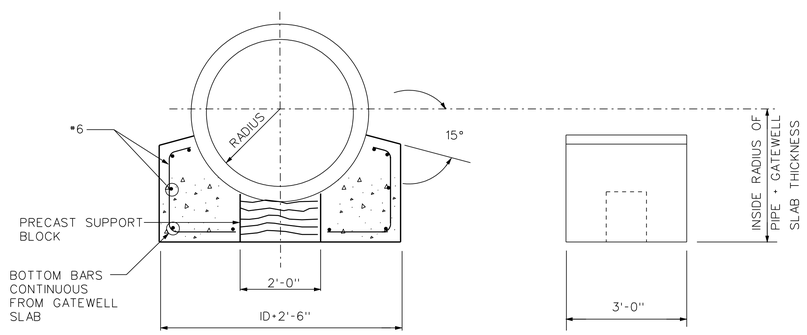

PIPE CRADLE DETAILS
NTS

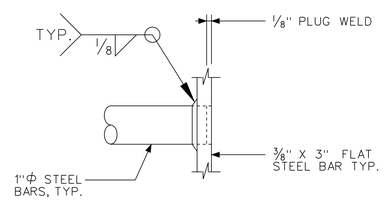

EXTERIOR BAR DETAIL (1 / S46 S46)
NTS

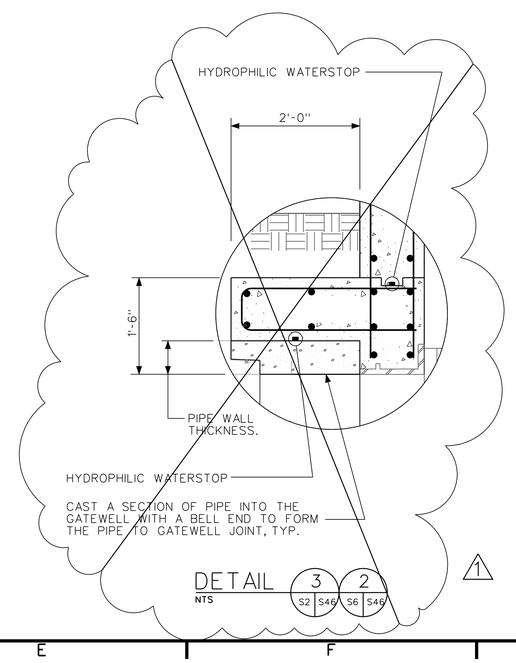

DETAIL (3 / S2 S46 & 2 / S6 S46)
NTS

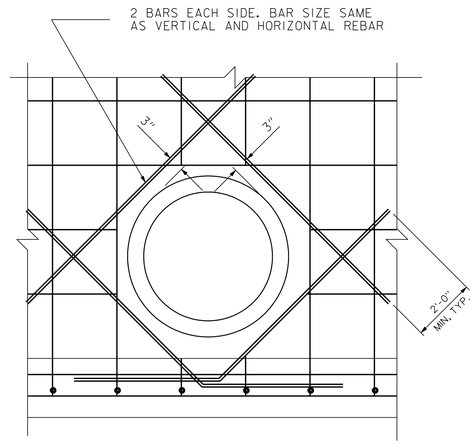

TYP. REINFORCING AT OPENINGS
NTS

US Army Corps of Engineers
Chicago District

SYMBOL	DELETE DETAIL AMENDMENT DESCRIPTION	DATE APPROVED	SYMBOL	DESCRIPTION	DATE APPROVED

DESIGNED BY: EGS | DATE: AUGUST 2007
DRAWN BY: EGS | SCALE: AS SHOWN
CHECKED BY: JJS | SOLICITATION NUMBER:
SUBMITTED BY: JIM PRZEWOZNIK | DATE:

U.S. ARMY ENGINEER DISTRICT
CORPS OF ENGINEERS
CHICAGO, ILLINOIS

LITTLE CALUMET RIVER, INDIANA
LOCAL FLOOD PROTECTION
STAGE V, PHASE 2

STANDARD CONCRETE AND CONSTRUCTION DETAILS

SHEET REFERENCE NUMBER:
S-46
SHEET 122 OF 138

PLOT DATE: 8/24/2007
FILENAME: D:\work\gsm25162\LRC52-S46(M01).dgn

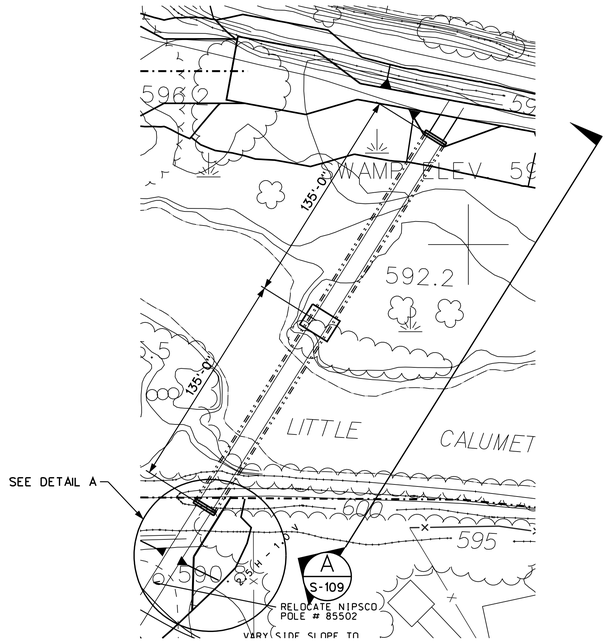

WEST OF KENNEDY AVE. PLAN

SCALE 1" = 40'-0"

NOTE: USE ABUTMENT PILE PLAN A

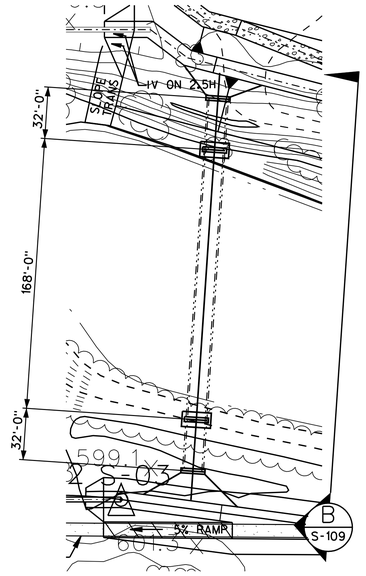

EAST OF KENNEDY AVE. PLAN

SCALE 1" = 40'-0"

NOTE: USE ABUTMENT PILE PLAN B

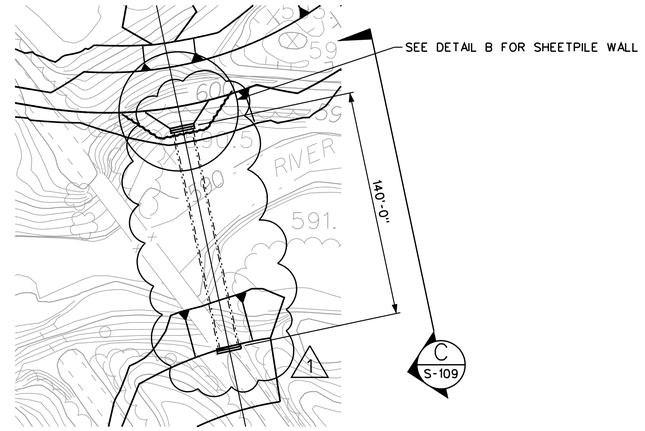

WEST OF INDIANAPOLIS BLVD. PLAN

SCALE 1" = 40'-0"

NOTE: USE ABUTMENT PILE PLAN C

NOTES:

1. ADDITIONAL ABUTMENT DETAILS ARE SHOWN ON S-109, S-110, AND R-09.
2. ADDITIONAL SHEET PILE WALL DETAILS ARE SHOWN ON S-109.
3. ELEVATION VIEWS ARE SHOWN ON S-109.

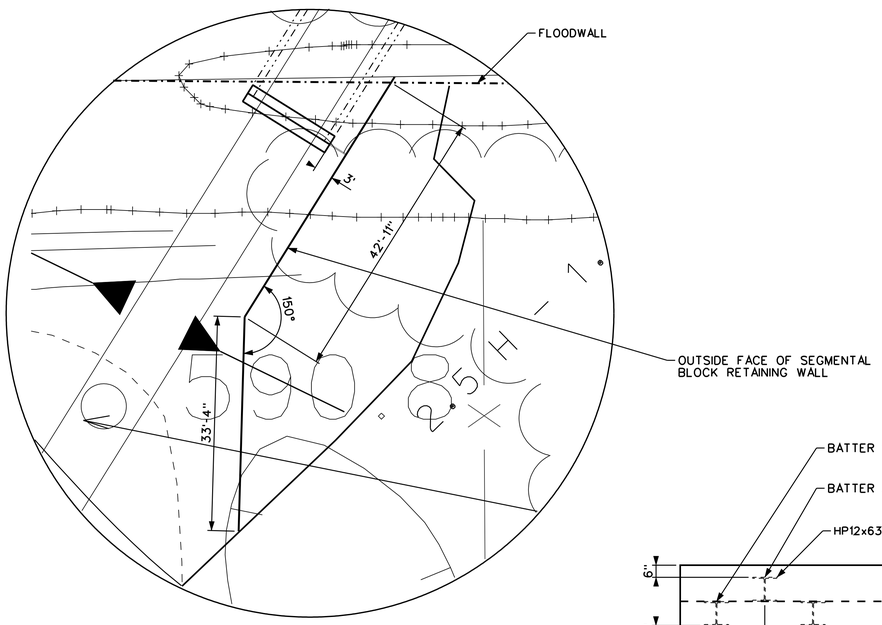

DETAIL A

SCALE 1" = 10'-0"

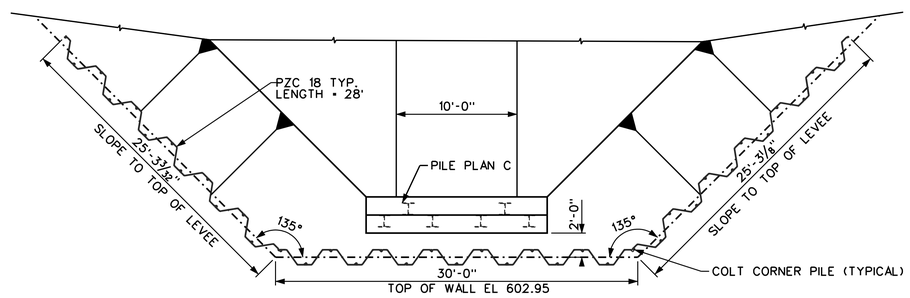

DETAIL B

SCALE: 3/16" = 1'-0"

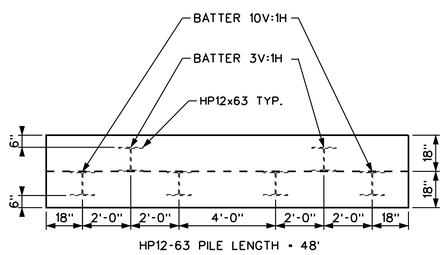

ABUTMENT PILE PLAN A

SCALE: 3/8" = 1'-0"

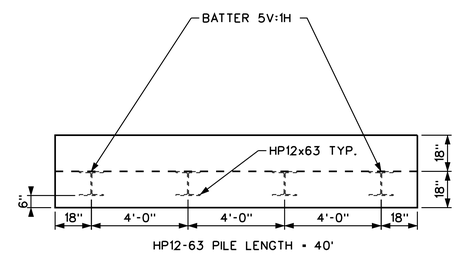

ABUTMENT PILE PLAN B

SCALE: 3/8" = 1'-0"

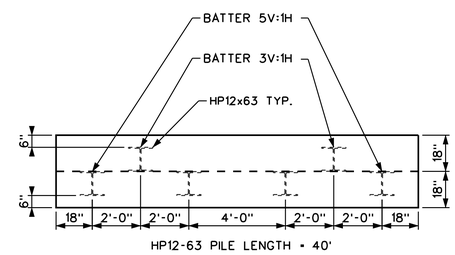

ABUTMENT PILE PLAN C

SCALE: 3/8" = 1'-0"

US Army Corps of Engineers
Chicago District

SYMBOL	AMENDMENT DESCRIPTION	DATE APPROVED	SYMBOL	DESCRIPTION	DATE APPROVED

DISPLAY OF BRIDGE IN PLAN

DESIGNED BY: ECV | DATE: 1 JUNE 2007
DRAWN BY: ECV | SCALE: 3/8" = 1'-0"
CHECKED BY: SAW | SOLICITATION NUMBER: W912P6-07-B-0006
SUBMITTED BY: Scott Wheeler | DATE: 08 MARCH 2007

U.S. ARMY ENGINEER DISTRICT
CORPS OF ENGINEERS
HUNTINGTON, WEST VIRGINIA

LITTLE CALUMET RIVER, INDIANA
LOCAL FLOOD PROTECTION
STAGE VI PHASE 1 - SOUTH

PEDESTRIAN BRIDGES
BRIDGE AND ABUTMENT PLANS

SHEET REFERENCE NUMBER:
S-109A

SHEET 132 OF 138

PLOT DATE: 8/24/2007
FILENAME: D:\working\ams24670\S-108M01.dgn

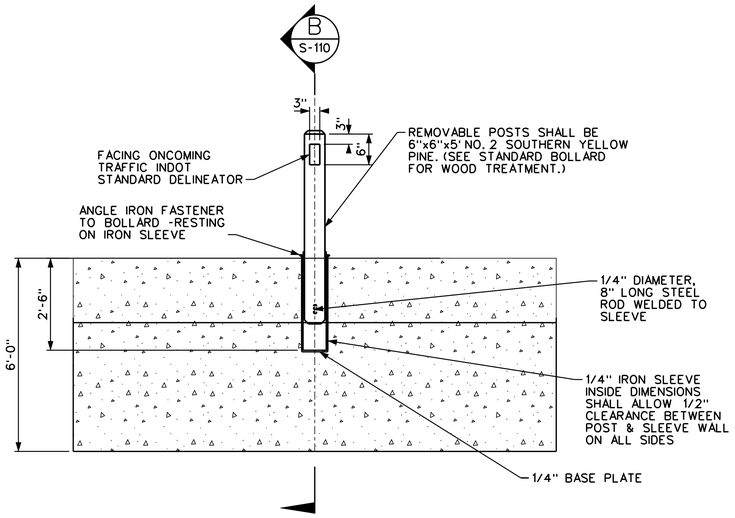

SECTION A (1)
SCALE: N.T.S.

VEHICLE BARRIER TYPE 1 DETAILS

NOTE: SEE R-09 FOR ADDITIONAL VEHICLE BARRIER REQUIREMENTS

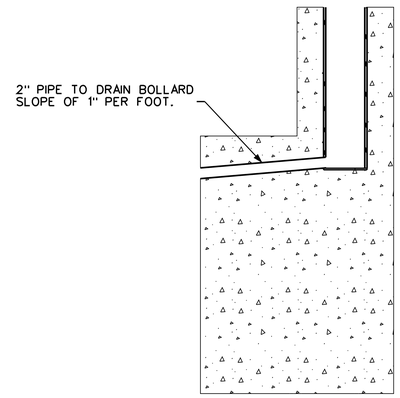

(1) SECTION B
SCALE: 1"=1'

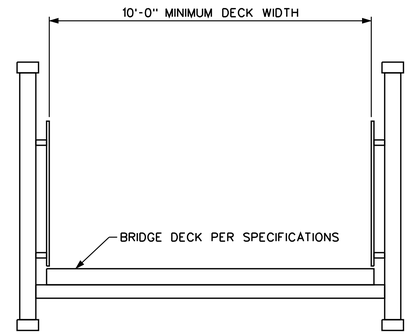

SAMPLE BRIDGE SECTION
SCALE: N.T.S.

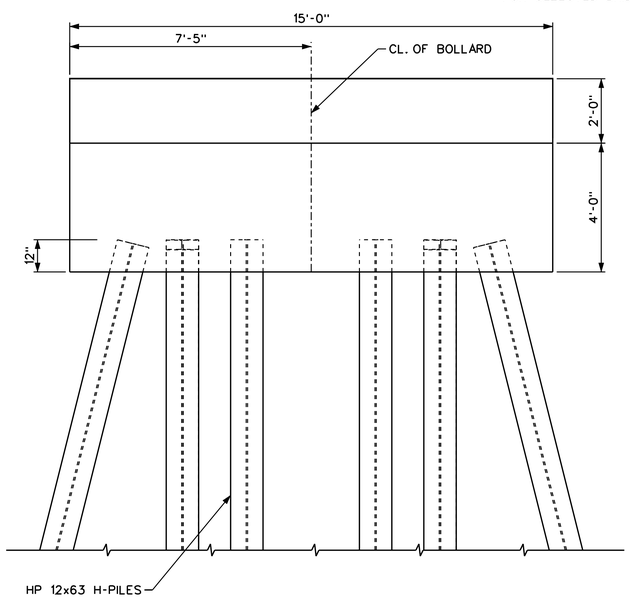

TYPICAL ELEVATION SECTION A (1)
SCALE: 1" = 2'
SEE S-108 FOR PILE BATTER DETAILS

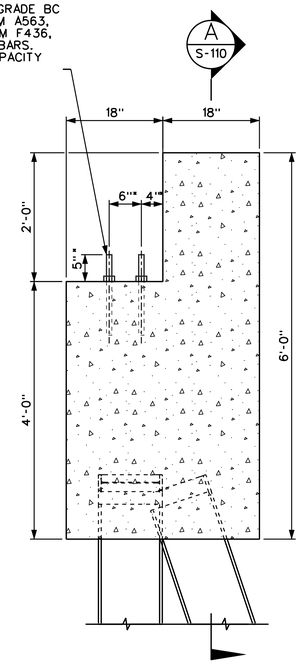

TYPICAL ABUTMENT SECTION (1)
SCALE: 1" = 1'

*NOTE:
VERIFY DIMENSIONS WITH BRIDGE MAUFACTURER, PRIOR TO CONSTRUCTION

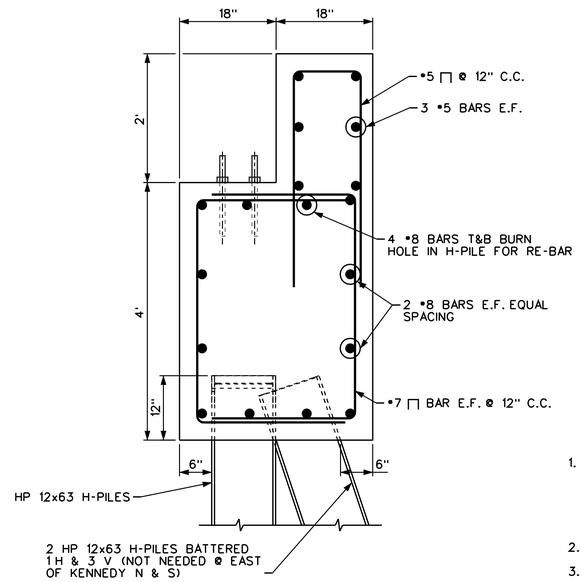

TYPICAL RE-STEEL DETAIL (1)
SCALE: 1" = 1'

GENERAL NOTES:

1. PEDESTRIAN BRIDGE DECK ELEVATION AND THE TOP OF ABUTMENT ELEVATION MAY VARY BASED ON VARIOUS BRIDGE DESIGNS. THE BOTTOM ELEVATION OF THE BRIDGE MUST BE ABOVE THE LEVEL OF PROTECTION. A TWO (2) INCH GROUT PAD IS REQUIRED TO KEEP DEBRIS OFF OF THE EXPANSION BEARING AREA. GROUT PAD SHALL BE OVERSIZED ONE (1) INCH ON OPEN SIDES.
2. EACH BRIDGE SHALL HAVE BEARINGS AT EQUAL ELEVATIONS.
3. BRIDGE SPANS ARE SHOWN AS OUT TO OUT DIMENSIONS.
4. BRIDGE EXPANSION JOINTS SHALL ALLOW FOR TEMPERATURE MOVEMENTS FROM -20 TO 100 DEGREES FAHRENHEIT. MOVEMENT SHALL BE ALLOWED THROUGH SLOTTED HOLES ON THE BRIDGE CONNECTION DETAILS.
5. ALL H-PILES HAVE A TOTAL LENGTH WHICH INCLUDES 12 INCHES OF CONCRETE EMBEDMENT.

US Army Corps of Engineers
Chicago District

SYMBOL	AMENDMENT DESCRIPTION	DATE APPROVED	SYMBOL	DESCRIPTION	DATE APPROVED
1	DETAILS AMENDMENTED				

U.S. ARMY ENGINEER DISTRICT
CORPS OF ENGINEERS
HUNTINGTON, WEST VIRGINIA

DESIGNED BY: ECV
DATE: MAY 2007
DRAWN BY: ABC
SCALE: 1" = 10'-0"
CHECKED BY: SAW
SOLICITATION NUMBER: W912P6-07-B-0006
Scott Wheeler
DATE: 08 MARCH 2007
SUBMITTED BY:

LITTLE CALUMET RIVER, INDIANA
LOCAL FLOOD PROTECTION
STAGE VI PHASE 1 - SOUTH

PEDESTRIAN BRIDGE
TYPICAL ABUTMENT
DETAILS

SHEET REFERENCE NUMBER:
S-110
SHEET 134 OF 138

PLOT DATE: $DATE$
FILENAME: $FILENAME$

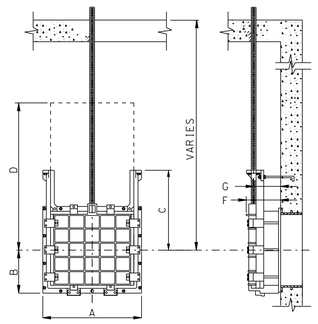

TYPICAL SLUICE GATE DETAIL
N.T.S.

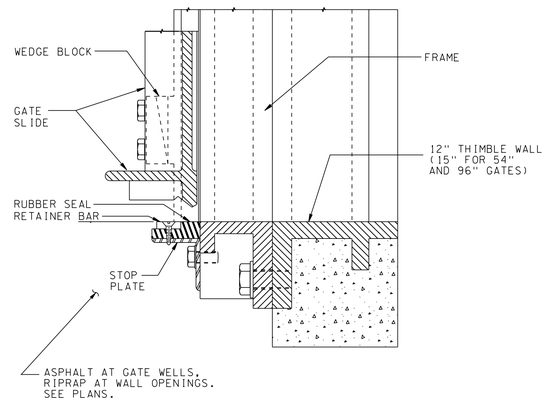

TYPICAL FLUSH BOTTOM ENCLOSURE
N.T.S.

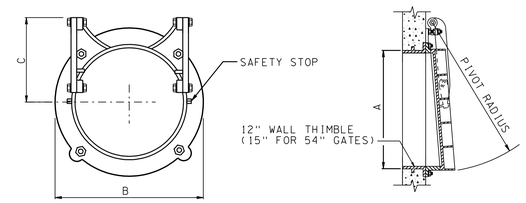

TYPICAL FLAP GATE DETAIL
N.T.S.

NOTES:

1. GATE DIMENSIONS MAY VARY ALONG WITH REQUIRED LIFTING HARDWARE DUE TO WEIGHT LIMITATIONS. THE CONTRACTOR SHALL BE RESPONSIBLE FOR OBTAINING THE GATE DIMENSIONS AND ALL REQUIRED HARDWARE PRIOR TO WALL FORMING.
2. CONTRACTOR SHALL COORDINATE THE GATE STEM SLEEVE BOX OPENING WITH MANUFACTURERS DATA.
3. WALL THIMBLE SHALL BE PLACED IN FORM BEFORE CONCRETE IS CAST.
4. DIMENSIONS MAY VARY WITH MANUFACTURER OF GATES.
5. ENCLOSED GEAR LIFT UNIT IS AN ADDITIONAL EQUIPMENT TO BE INCORPORATED IN GATE FABRICATION FOR EASY OPERATION.
6. STEM GUIDE WILL BE REQUIRED TO MAINTAIN THE ALIGNMENT AND PREVENT BUCKLING OF THE STEM. STEM GUIDE MUST BE PLACED ON A CENTER TO CENTER DISTANCE THAT WILL LIMIT THE L/R RATIO OF THE STEM TO 200 OR LESS.
7. ALL DIMENSIONS IN SCHEDULES GIVEN IN INCHES.
8. SEE SECTION 33 49 33.00 03, SLUICE GATES AND FLAP GATES, FOR PEDESTAL REQUIREMENTS.

FLAP GATE SCHEDULE

GATE LOCATION	No. OF GATES	SIZE (IN.)	SIZE (IN.)	SIZE (IN.)	SIZE (IN.)	REFERENCE DRAWING NO.
5-8C	1	24x24	32.00	16.00	35.50	SEE DRAWING NO. S-15 & C-44
TRISTATE GATEWELL	1	48x48	57.50	28.75	66.75	SEE DRAWING NO. S-17 & C-49
5-7C	1	24x24	32.00	16.00	35.50	SEE DRAWING NO. S-15 & C-50
INDIANAPOLIS PUMP STATION OUTLET	3	60x60	69.50	34.75	81.75	SEE DRAWING NO. S-44 & C-51
6-3C	1	24x24	32.00	16.00	35.50	SEE DRAWING NO. S-15 & C-45
6-5C	1	24x24	32.00	16.00	35.50	SEE DRAWING NO. S-15 & C-46
UTILITY CORRIDOR	1	24x24	32.00	16.00	35.50	SEE DRAWING NO. S-39 & C-12
6-7C	1	24x24	32.00	16.00	35.50	SEE DRAWING NO. S-13 & C-47
KENNEDY AVENUE PUMP STATION	2	54x54	64.00	32.00	74.50	SEE DRAWING NO. S-30 & C-48
KENNEDY AVENUE PUMP STATION	2	48x48	57.50	28.75	66.75	SEE DRAWING NO. S-31 & C-48

SLUICE GATE SCHEDULE

GATE LOCATION	No. OF GATES	SIZE (IN.)	A	B	C	D	E	F	REFERENCE DRAWING NO.
BARING PUMP STATION OUTLET	1	42x42	53.50	26.00	——	——	6.25	9.50	SEE DRAWING NO. S-03
TRISTATE GATEWELL	1	48x48	61.50	30.75	——	——	9.50	15.25	SEE DRAWING NO. S-16
INDIANAPOLIS PUMP STATION OUTLET	3	60x60	73.50	36.75	——	——	9.50	16.50	SEE DRAWING NO. S-44
6-5C	1	24x24	34.00	17.00	——	——	6.25	8.50	SEE DRAWING NO. S-45
UTILITY CORRIDOR	1	24x24	34.00	17.00	——	——	6.25	8.50	SEE DRAWING NO. S-39
KENNEDY AVENUE PUMP STATION	2	54x54	67.50	33.75	——	——	9.50	15.25	SEE DRAWING NO. S-30
KENNEDY AVENUE PUMP STATION	2	48x48	61.50	30.75	——	——	9.50	15.25	SEE DRAWING NO. S-31

US Army Corps of Engineers
Chicago District

SYMBOL	AMENDMENT DESCRIPTION	DATE APPROVED	SYMBOL	DESCRIPTION	DATE APPROVED

DESIGNED BY: JAG
DATE: AUG 2007
DRAWN BY: DB
SCALE: AS SHOWN
CHECKED BY: WK
SOLICITATION NUMBER: W912P6-07-B-0006
SUBMITTED BY: JOHN GROBOSKI
DATE:

U.S. ARMY ENGINEER DISTRICT
CORPS OF ENGINEERS
CHICAGO, ILLINOIS

LITTLE CALUMET RIVER, INDIANA
LOCAL FLOOD PROTECTION
STAGE V, PHASE 2 - LEVEE

SLUICE AND FLAP GATE DETAILS

SHEET REFERENCE NUMBER:
M-01
SHEET 104 OF 138

PLOT DATE: $DATE$
FILENAME: $FILENAME$