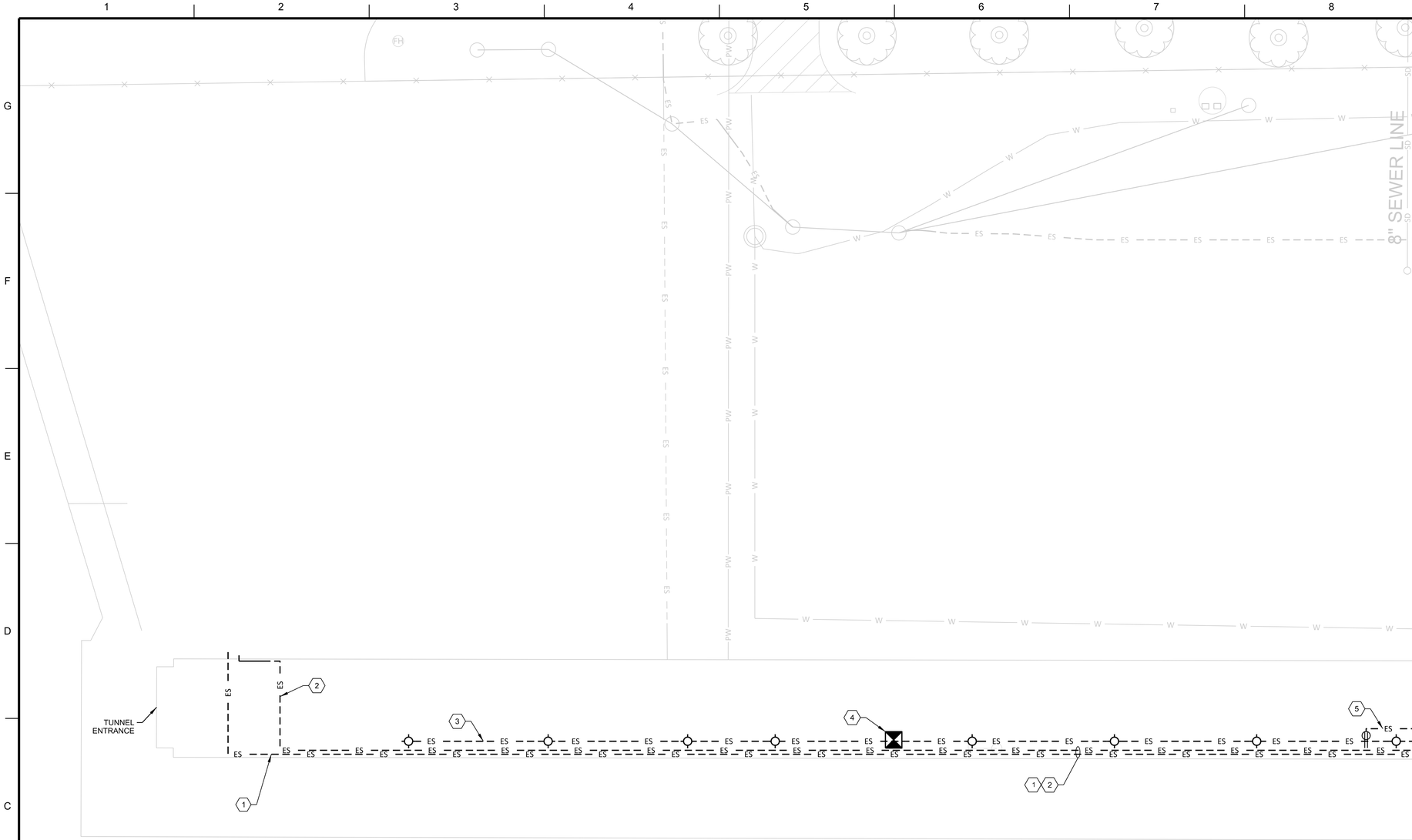

B1 ELECTRICAL SITE PLAN - DEMOLITION

SCALE: 3/32" = 1'

MATCHLINE TO ED-102

SHEET KEYNOTES

1. ABANDONED CONDUIT. DISCONNECT AND REMOVE INCLUDING CABLE AND CONDUIT BACK TO SOURCE.
2. ABANDONED UTILITY (FLEX CONDUIT). DISCONNECT AND REMOVE INCLUDING CABLE AND CONDUIT BACK TO SOURCE.
3. LIGHTING BRANCH CIRCUIT. DISCONNECT AND REMOVE EXISTING LIGHT FIXTURES INCLUDING CABLE AND CONDUIT BACK TO SOURCE.
4. CAMERA TOWER (ABOVE TUNNEL). DISCONNECT AND REMOVE EXISTING CAMERA TOWER INCLUDING CABLE AND CONDUIT BACK TO SOURCE.
5. RECEPTACLE OUTLET. DISCONNECT AND REMOVE EXISTING RECEPTACLE OUTLET INCLUDING CABLE AND CONDUIT BACK TO SOURCE.

US Army Corps of Engineers®

MARK	DESCRIPTION	DATE

DESIGNED BY: MAJDI ARMAN	ISSUE DATE: FEB 2019
DRAWN BY: KPC	SOLICITATION NO.:
CHECKED BY: FL	CONTRACT NO.:
SUBMITTED BY: FAYE LEFFLER	PROJECT ID: 114419
SIZE: ANSI D	FILE NAME: 114419_ED-101.dgn

U.S. ARMY CORPS OF ENGINEERS
CHICAGO DISTRICT
231 S. LASALLE ST. SUITE 1500
CHICAGO, ILLINOIS 60604

CHICAGO LOCK
NORTH PIER REPAIRS
CHICAGO, ILLINOIS

ELECTRICAL SITE PLAN - DEMOLITION

SHEET ID

ED-101

...\Chicago Lock North Pier Repair - 114419\40 - Geospatial Data\Drawings\CAD_BIM_Sheets\ELECTRICAL SITE PLAN - DEMOLITION
2:44:42 PM 2/12/2019 PD: AEC_pdf.pltcfg DS: AEC_Screen.dscript

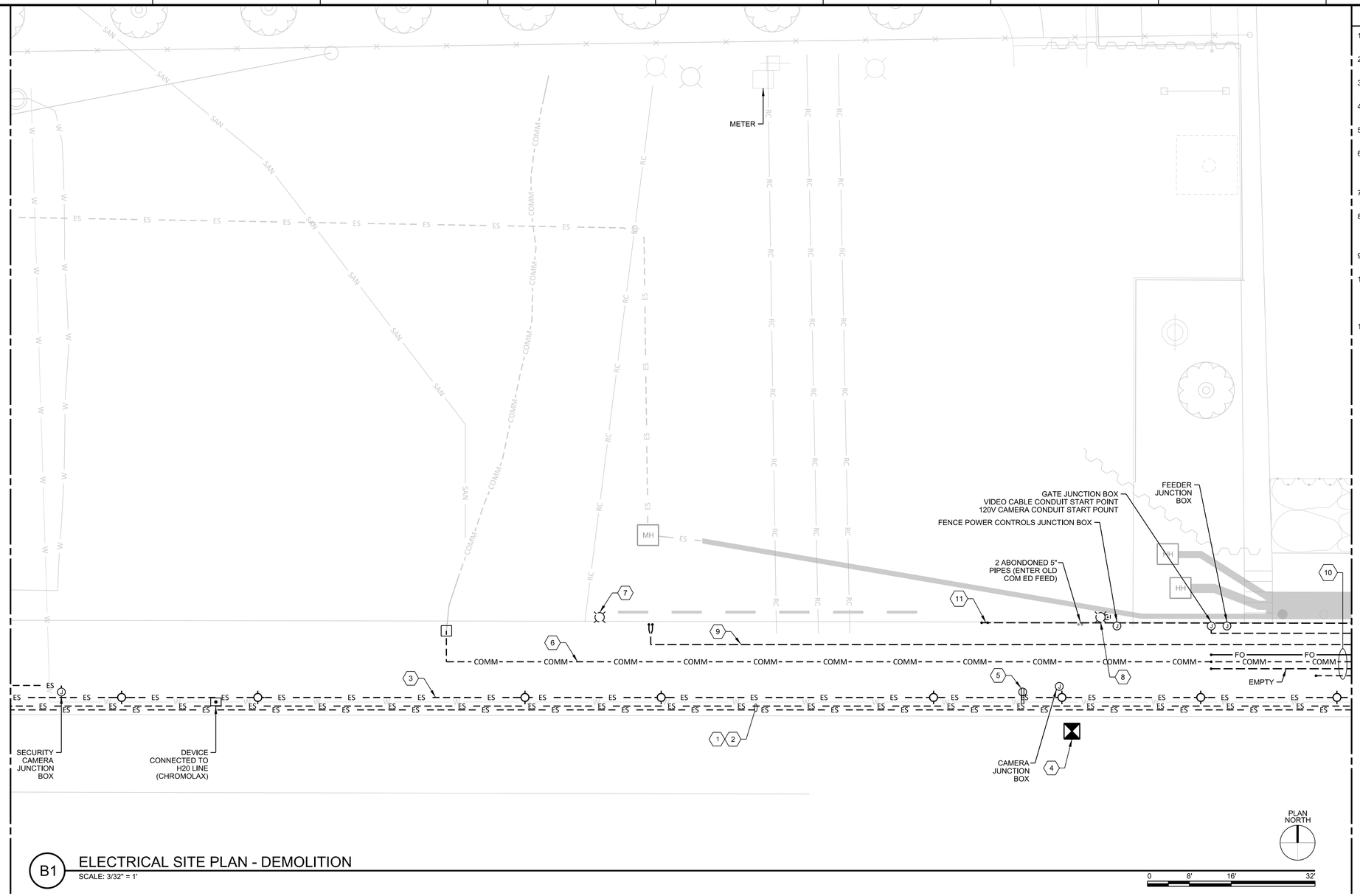

B1 ELECTRICAL SITE PLAN - DEMOLITION

SCALE: 3/32" = 1'

MATCHLINE TO ED-101

MATCHLINE TO ED-103

SHEET KEYNOTES

1. ABANDONED CONDUIT. DISCONNECT AND REMOVE INCLUDING CABLE AND CONDUIT BACK TO SOURCE.
2. ABANDONED UTILITY (FLEX CONDUIT). DISCONNECT AND REMOVE INCLUDING CABLE AND CONDUIT BACK TO SOURCE.
3. LIGHTING BRANCH CIRCUIT. DISCONNECT AND REMOVE EXISTING LIGHT FIXTURES INCLUDING CABLE AND CONDUIT BACK TO SOURCE.
4. CAMERA TOWER (ABOVE TUNNEL). DISCONNECT AND REMOVE EXISTING CAMERA TOWER INCLUDING CABLE AND CONDUIT BACK TO SOURCE.
5. RECEPTACLE OUTLET. DISCONNECT AND REMOVE EXISTING RECEPTACLE OUTLET INCLUDING CABLE AND CONDUIT BACK TO SOURCE.
6. EXISTING (2) TELECOM COAX & (1) TELECOM FIBER OPTIC CABLE (AT&T). DISCONNECT AND REMOVE. PROVIDE NEW AND ROUTE IN EXISTING DUCT-BANK. COORDINATE WITH TELECOM COMPANY (AT&T) FOR NEW DATA/VOICE LINE REQUIREMENTS.
7. LIGHT POLE (ABOVE TUNNEL). DISCONNECT AND REMOVE EXISTING LIGHT POLE INCLUDING CABLE AND CONDUIT BACK TO SOURCE.
8. LIGHT POLE & GATE CONTROLS (ABOVE TUNNEL). DISCONNECT AND REMOVE EXISTING LIGHT POLE AND GATE CONTROLS INCLUDING CABLE AND CONDUIT BACK TO SOURCE. PROVIDE NEW POWER AND GATE CONTROLS AND ROUTE IN EXISTING DUCT BANK.
9. EXISTING (2) 5" UTILITY CONDUIT. DISCONNECT AND REMOVE EXISTING (2) 5" ABANDONED UTILITY CONDUIT.
10. EXISTING (4) 5" CONDUIT. DISCONNECT AND REMOVE EXISTING (4) 5" CONDUIT INCLUDING CABLE BACK TO SOURCE. REMOVE TELECOM FIBER OPTIC CABLE (AT&T) AND ROUTE NEW IN EXISTING DUCT-BANK. COORDINATE WITH TELECOM COMPANY (AT&T) FOR NEW DATA/VOICE LINE REQUIREMENTS.
11. EXISTING (2) 500 KCMIL GROUND CABLES. DISCONNECT AND REMOVE EXISTING (2) 500 KCMIL GROUND CABLES.

US Army Corps of Engineers®

MARK	DESCRIPTION	DATE

ISSUE DATE: FEB 2019
SOLICITATION NO.:
CONTRACT NO.:
PROJECT ID: 114419
FILE NAME: 114419_ED-102.dgn

DESIGNED BY: MAJDI ARMAN
DRAWN BY: KPC
CHECKED BY: FL
SUBMITTED BY: FAYE LEFFLER, PE
SIZE: ANSI D

U.S. ARMY CORPS OF ENGINEERS
CHICAGO DISTRICT
231 S. LASALLE ST., SUITE 1500
CHICAGO, ILLINOIS 60604

CHICAGO LOCK
NORTH PIER REPAIRS
CHICAGO, ILLINOIS

ELECTRICAL SITE PLAN - DEMOLITION

SHEET ID

ED-102

...\Chicago Lock North Pier Repair - 114419\40 - Geospatial Data\Drawings\CAD_BIM_Sheets\ELECTRICAL SITE PLAN - DEMOLITION
2:44:52 PM 2/12/2019 PD: AEC_pdf.pltcfg DS: AEC_Screen.dscript

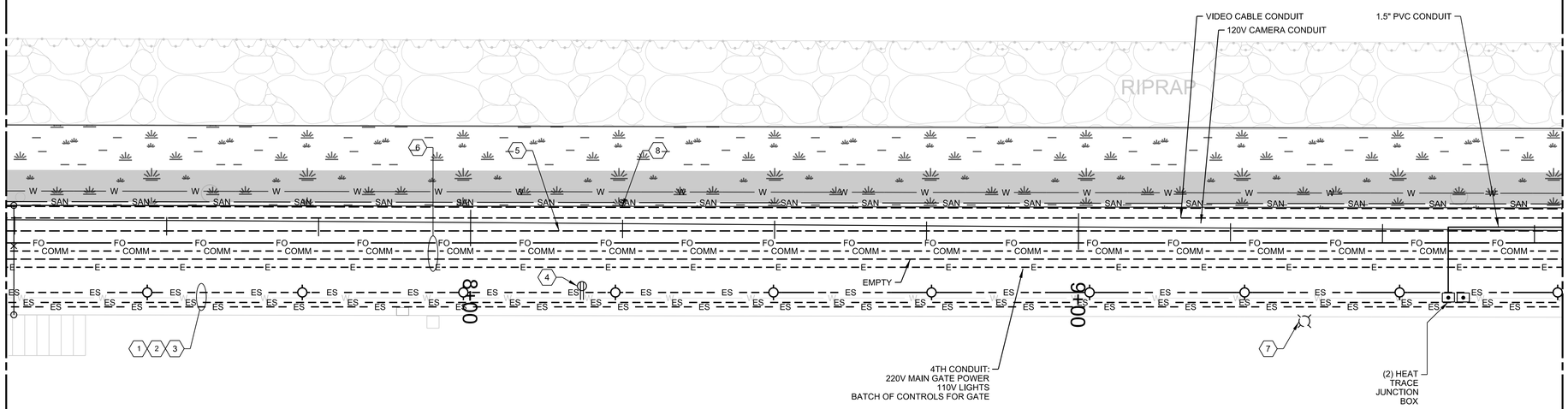

B1 ELECTRICAL SITE PLAN - DEMOLITION

SCALE: 3/32" = 1'

PLAN NORTH

0 8' 16' 32'

MATCHLINE TO ED-102

MATCHLINE TO ED-104

SHEET KEYNOTES

1. ABANDONED CONDUIT. DISCONNECT AND REMOVE INCLUDING CABLE AND CONDUIT BACK TO SOURCE.
2. ABANDONED UTILITY (FLEX CONDUIT). DISCONNECT AND REMOVE INCLUDING CABLE AND CONDUIT BACK TO SOURCE.
3. LIGHTING BRANCH CIRCUIT. DISCONNECT AND REMOVE EXISTING LIGHT FIXTURES INCLUDING CABLE AND CONDUIT BACK TO SOURCE.
4. RECEPTACLE OUTLET. DISCONNECT AND REMOVE EXISTING RECEPTACLE OUTLET INCLUDING CABLE AND CONDUIT BACK TO SOURCE.
5. EXISTING (2) 5" UTILITY CONDUIT. DISCONNECT AND REMOVE EXISTING (2) 5" ABANDONED UTILITY CONDUIT.
6. EXISTING (4) 5" CONDUIT. DISCONNECT AND REMOVE EXISTING (4) 5" CONDUIT INCLUDING CABLE BACK TO SOURCE. REMOVE TELECOM FIBER OPTIC CABLE (AT&T) AND ROUTE NEW IN EXISTING DUCT-BANK. COORDINATE WITH TELECOM COMPANY (AT&T) FOR NEW DATA/VOICE LINE REQUIREMENTS.
7. LIGHT POLE (ABOVE TUNNEL). DISCONNECT AND REMOVE EXISTING LIGHT POLE INCLUDING CABLE AND CONDUIT BACK TO SOURCE.
8. EXISTING (2) 500 KCMIL GROUND CABLES. DISCONNECT AND REMOVE EXISTING (2) 500 KCMIL GROUND CABLE.

US Army Corps of Engineers®

MARK	DESCRIPTION	DATE

DESIGNED BY: MAJDI ARMAN
DRAWN BY: KPC
CHECKED BY: FL
SUBMITTED BY: FAYE LEFFLER
DATE: 2/12/2019
ANSI D
ISSUE DATE: FEB 2019
SOLICITATION NO.:
CONTRACT NO.:
PROJECT ID: 114419
FILE NAME: 114419_ED-103.dgn

U.S. ARMY CORPS OF ENGINEERS
CHICAGO DISTRICT
231 S. LASALLE ST., SUITE 1500
CHICAGO, ILLINOIS 60604

CHICAGO LOCK
NORTH PIER REPAIRS
CHICAGO, ILLINOIS

ELECTRICAL SITE PLAN - DEMOLITION

SHEET ID

ED-103

...\Chicago Lock North Pier Repair - 114419\40 - Geospatial Data\Drawings\CAD_BIM_Sheets\ELECTRICAL SITE PLAN - DEMOLITION
2:44:55 PM 2/12/2019 PD: AEC_pdf.pltcfg DS: AEC_Screen.dscript

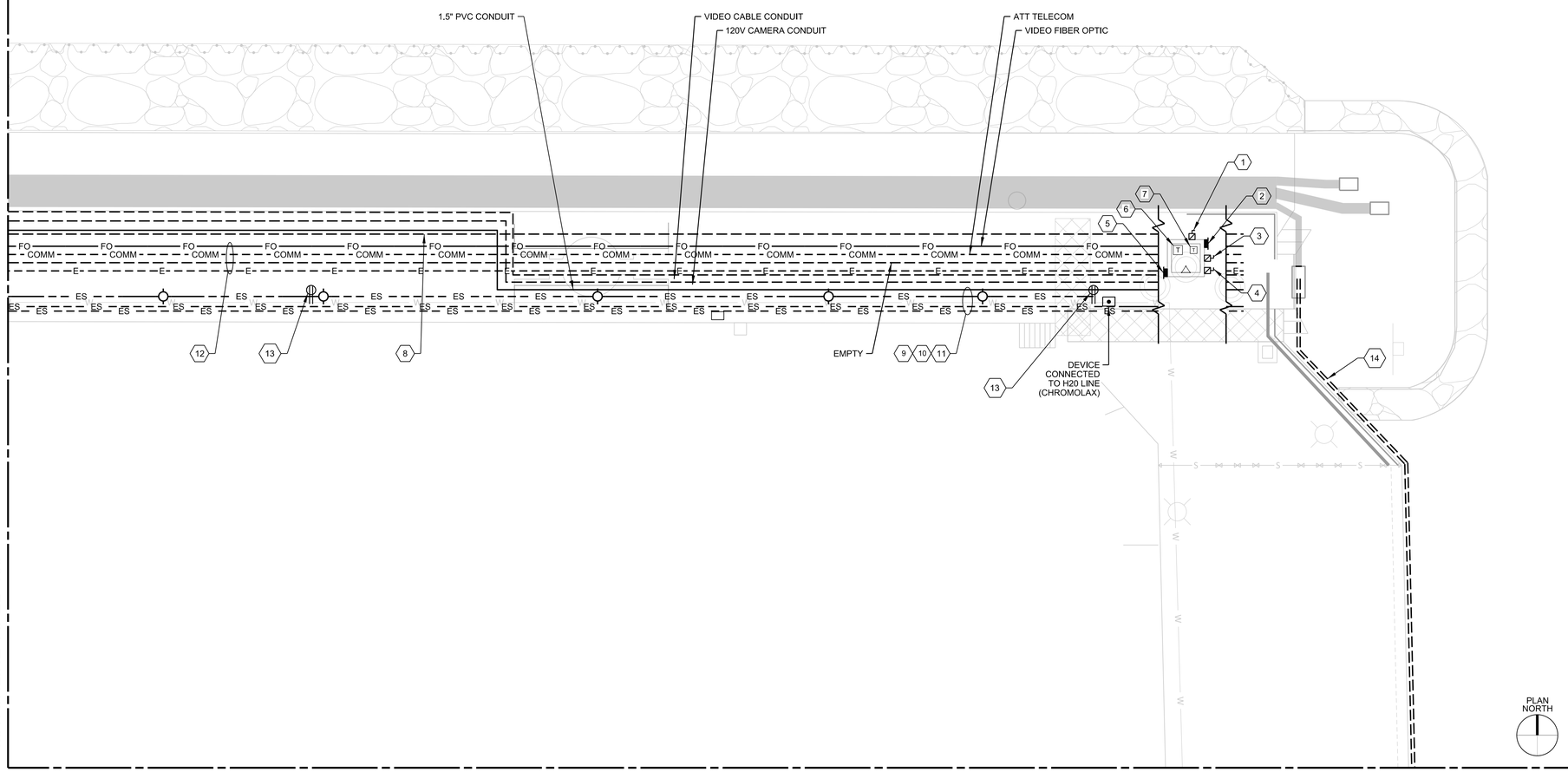

B1 ELECTRICAL SITE PLAN - DEMOLITION

SCALE: 3/32" = 1'

SHEET KEYNOTES

1. LIGHTING SAFETY SWITCH. DISCONNECT AND REMOVE EXISTING SAFETY SWITCH INCLUDING CABLE AND CONDUIT BACK TO SOURCE.
2. ENCLOSED CIRCUIT BREAKER. DISCONNECT AND REMOVE EXISTING ENCLOSED CIRCUIT BREAKER INCLUDING CABLE AND CONDUIT BACK TO SOURCE.
3. SEIMENS SAFETY SWITCH. DISCONNECT AND REMOVE EXISTING SAFETY SWITCH INCLUDING CABLE AND CONDUIT BACK TO SOURCE.
4. RECEPTACLE SAFETY SWITCH. DISCONNECT AND REMOVE EXISTING SAFETY SWITCH INCLUDING CABLE AND CONDUIT BACK TO SOURCE.
5. ENCLOSED CIRCUIT BREAKER. DISCONNECT AND REMOVE EXISTING ENCLOSED CIRCUIT BREAKER INCLUDING CABLE AND CONDUIT BACK TO SOURCE.
6. ABANDONED WESTINGHOUSE TRANSFORMER (25KVA). DISCONNECT AND REMOVE ABANDONED TRANSFORMER.
7. ABANDONED PENNSYLVANIA TRANSFORMER. DISCONNECT AND REMOVE ABANDONED TRANSFORMER.
8. EXISTING (2) 5" UTILITY CONDUIT. DISCONNECT AND REMOVE EXISTING (2) 5" UTILITY CONDUIT.
9. ABANDONED CONDUIT. DISCONNECT AND REMOVE INCLUDING CABLE AND CONDUIT BACK TO SOURCE.
10. ABANDONED UTILITY (FLEX CONDUIT). DISCONNECT AND REMOVE INCLUDING CABLE AND CONDUIT BACK TO SOURCE.
11. LIGHTING BRANCH CIRCUIT. DISCONNECT AND REMOVE EXISTING LIGHT FIXTURES INCLUDING CABLE AND CONDUIT BACK TO SOURCE.
12. EXISTING (4) 5" CONDUIT. DISCONNECT AND REMOVE EXISTING (4) 5" CONDUIT INCLUDING CABLE BACK TO SOURCE. REMOVE TELECOM FIBER OPTIC CABLE (AT&T) AND ROUTE NEW IN EXISTING DUCT-BANK. COORDINATE WITH TELECOM COMPANY (AT&T) FOR NEW DATA/VOICE LINE REQUIREMENTS.
13. RECEPTACLE OUTLET. DISCONNECT AND REMOVE EXISTING RECEPTACLE OUTLET INCLUDING CABLE AND CONDUIT BACK TO SOURCE.
14. FURNISH AND INSTALL (2) 5" CONDUIT ABOVE EXISTING AND RUN NEW COMED PRIMARY FEEDER CABLE. DISCONNECT AND REMOVE EXISTING (2) 5" CONDUIT.

US Army Corps of Engineers®

MARK	DESCRIPTION	DATE

DESIGNED BY: MAJDI ARMAN
DRAWN BY: KPC
CHECKED BY: FL
SUBMITTED BY: FAYE LEFFLER
SIZE: ANSI D
FILE NAME: 114419_ED-104.dgn
ISSUE DATE: FEB 2019
SOLICITATION NO.:
CONTRACT NO.:
PROJECT ID: 114419

U.S. ARMY CORPS OF ENGINEERS
CHICAGO DISTRICT
231 S. LASALLE ST. SUITE 1500
CHICAGO, ILLINOIS 60604

CHICAGO LOCK
NORTH PIER REPAIRS
CHICAGO, ILLINOIS

ELECTRICAL SITE PLAN - DEMOLTION

SHEET ID

ED-104

...\Chicago Lock North Pier Repair - 114419\40 - Geospatial Data\Drawings\CAD_BIM_Sheets\ELECTRICAL SITE PLAN - DEMOLITION
2:44:58 PM 2/12/2019 PD: AEC_pdf.pltcfg DS: AEC_Screen.dscript

MATCHLINE TO ED-104

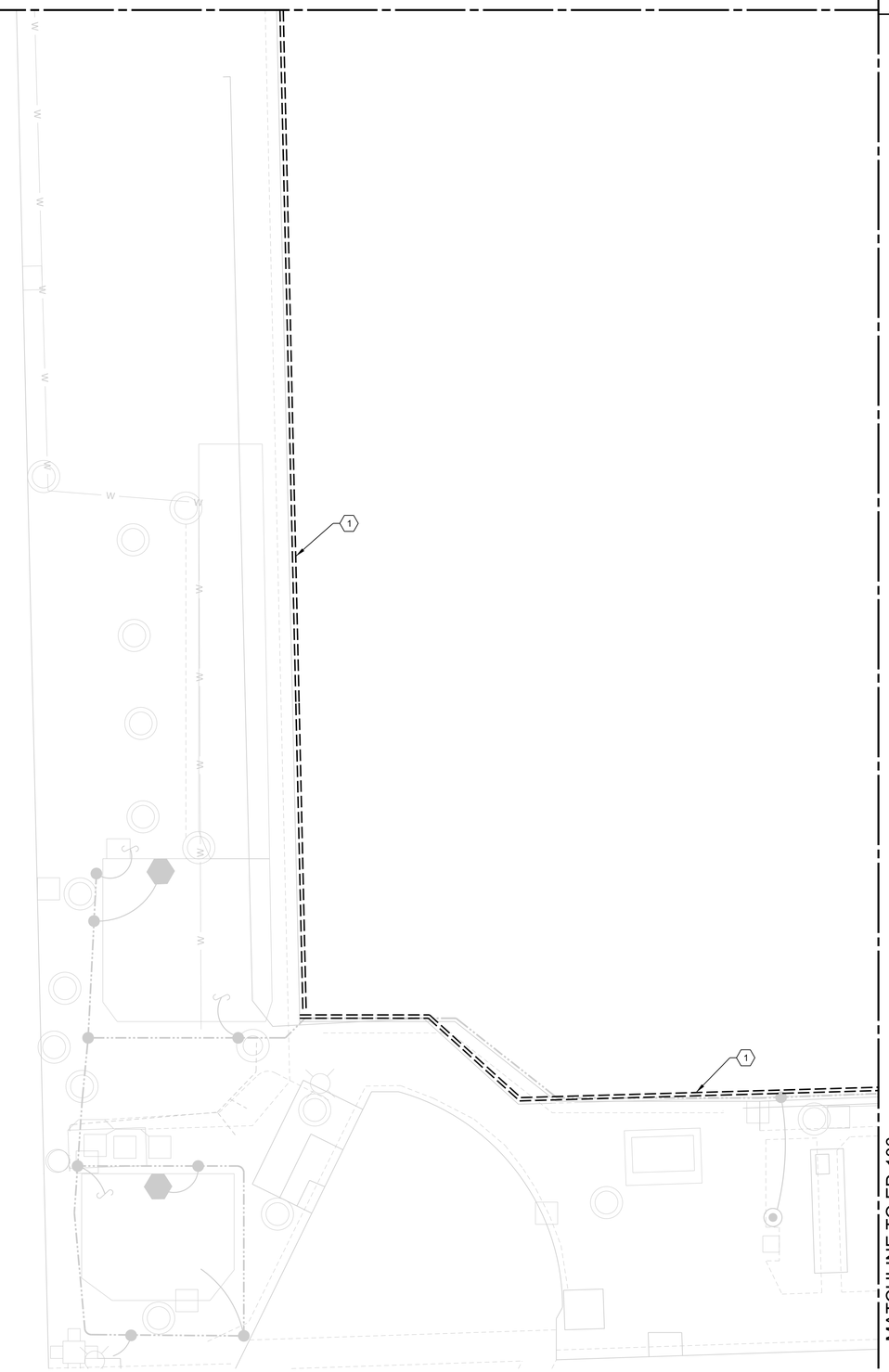

MATCHLINE TO ED-106

PLAN NORTH

0 8' 16' 32'

SHEET KEYNOTES

1. FURNISH AND INSTALL (2) 5" CONDUIT ABOVE EXISTING AND RUN NEW COMED PRIMARY FEEDER CABLE. DISCONNECT AND REMOVE EXISTING (2) 5" CONDUIT.

A1 ELECTRICAL SITE PLAN - DEMOLTION

SCALE: 3/32"=1'-0"

US Army Corps of Engineers®

MARK	DESCRIPTION	DATE

DESIGNED BY: MAJDI ARMAN
DRAWN BY: KPC
CHECKED BY: FL
SUBMITTED BY: FAYE LEFFLER
SIZE: ANSI D
FILE NAME: 114419_ED-105.dgn
ISSUE DATE: FEB 2019
SOLICITATION NO.:
CONTRACT NO.:
PROJECT ID: 114419

U.S. ARMY CORPS OF ENGINEERS
CHICAGO DISTRICT
231 S. LASALLE ST. SUITE 1500
CHICAGO, ILLINOIS 60604

CHICAGO LOCK
NORTH PIER REPAIRS
CHICAGO, ILLINOIS

ELECTRICAL SITE PLAN - DEMOLTION

SHEET ID

ED-105

...\Chicago Lock North Pier Repair - 114419\40 - Geospatial Data\Drawings\CAD_BIM_Sheets\ELECTRICAL SITE PLAN - DEMOLITION
2:45:01 PM 2/12/2019 PD: AEC_pdf.pltcfg DS: AEC_Screen.dscript

SHEET KEYNOTES

1. FURNISH AND INSTALL (2) 5" CONDUIT ABOVE EXISTING AND RUN NEW COMED PRIMARY FEEDER CABLE. DISCONNECT AND REMOVE EXISTING (2) 5" CONDUIT.

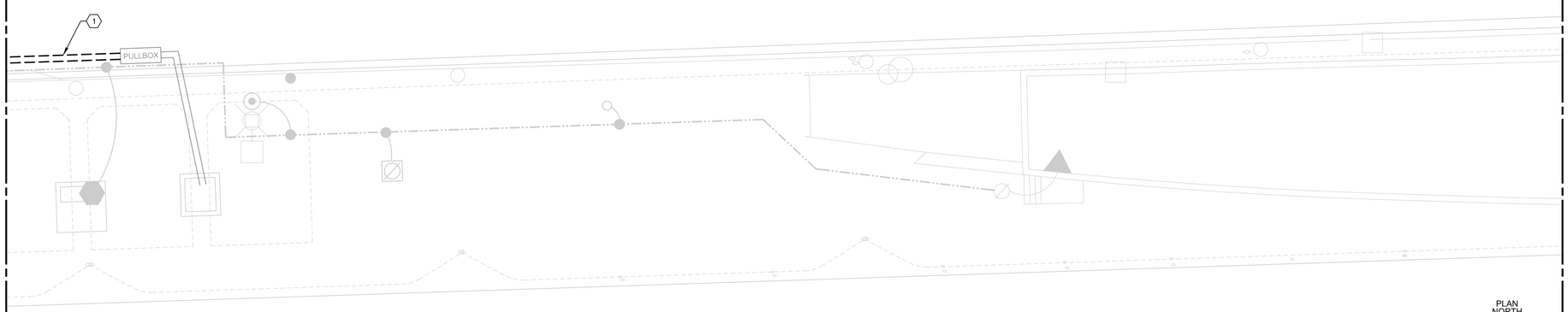

PLAN NORTH

0 8' 16' 32'

A1 ELECTRICAL SITE PLAN - DEMOLITION

SCALE: 3/32"=1'-0"

US Army Corps of Engineers®

MARK	DESCRIPTION	DATE

U.S. ARMY CORPS OF ENGINEERS
CHICAGO DISTRICT
231 S. LASALLE ST., SUITE 1500
CHICAGO, ILLINOIS 60604

DESIGNED BY: MAJDI ARMAN
DRAWN BY: KPC
CHECKED BY: CG
SUBMITTED BY: CHRIS GIACONE, PE
SIZE: ANSI D FILE NAME: 114419_ED-106.dgn
ISSUE DATE: FEB 2019
SOLICITATION NO.:
CONTRACT NO.:
PROJECT ID: 114419

CHICAGO LOCK
NORTH PIER REPAIRS
CHICAGO, ILLINOIS

ELECTRICAL SITE PLAN - DEMOLITION

SHEET ID

ED-106

...\Chicago Lock North Pier Repair - 114419\40 - Geospatial Data\Drawings\CAD_BIM_Sheets\ELECTRICAL SITE PLAN - DEMOLITION
2:45:04 PM 2/12/2019 PD: AEC_pdf.pltcfg DS: AEC_Screen.dscript

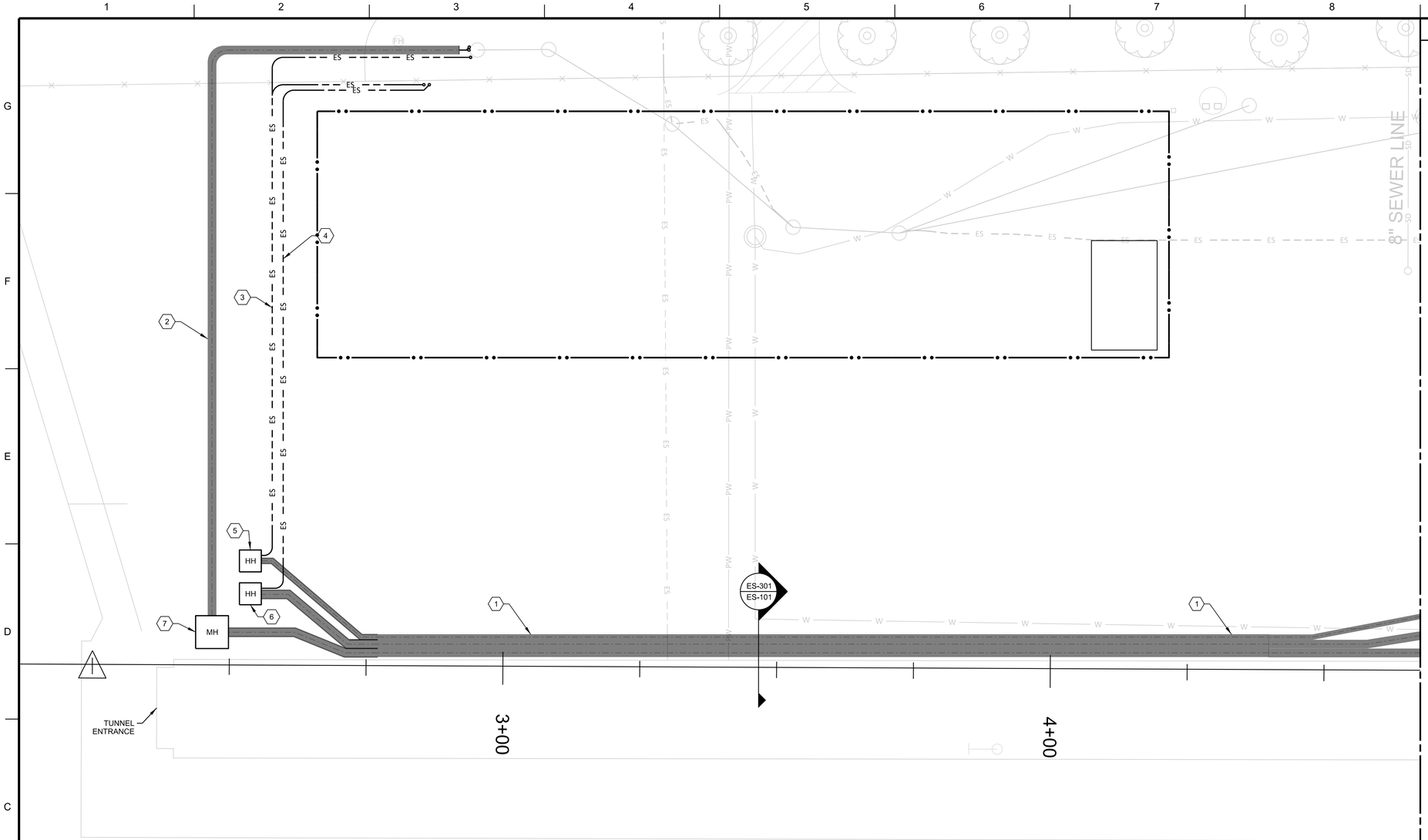

B1 ELECTRICAL SITE PLAN

SCALE: 3/32" = 1'

MATCHLINE TO ES-102

SHEET KEYNOTES

1. FURNISH AND INSTALL (8) 5" CONDUIT IN CONCRETE DUCT BANK. SEE SHEET E-XXX FOR CROSS SECTIONAL LAYOUT.

   (2) 5" CONDUIT FOR RE-ROUTING OF COMED 12.47KV PRIMARY DISTRIBUTION FEEDER.

   (4) 5" CONDUIT FOR RE-ROUTING OF 480/277V LIGHTING AND POWER CIRCUITS.

   (2) 5" CONDUIT FOR RE-ROUTING OF NEW TELECOM FIBER OPTIC CABLE (AT&T), ELECTRONIC SECURITY SYSTEM (VIDEO, ACCESS CONTROL) AND GATE CONTROL.

   DUCT BANK SHALL BE INSTALLED IN ACCORDANCE WITH COMED SYSTEM STANDARDS 'C4050 CONDUIT RUN TRENCH PREPARATION', 'C4171 CONDUIT RUN INSTALLATION' AND 'C4090 CONDUIT RUN FORMATIONS'.

2. FURNISH AND INSTALL COMED PRIMARY FEEDER DUCT-BANK IN ACCORDANCE WITH COMED SYSTEM STANDARDS 'C4050 CONDUIT RUN TRENCH PREPARATION', 'C4171 CONDUIT RUN INSTALLATION' AND 'C4090 CONDUIT RUN FORMATIONS'. RE-FEED NEW 12KV CABLE (PRIMARY DISTRIBUTION).

3. FURNISH AND INSTALL (2) "2 CONDUIT APPROXIMATELY 30" BELOW GRADE.

   (1) 2" CONDUIT FOR REROUTING OF NEW TELECOM FIBER OPTIC CABLE (AT&T).

   (1) 2" CONDUIT FOR REROUTING OF NEW GATE CONTROL CABLE.

4. FURNISH AND INSTALL (1) 2" CONDUIT APPROXIMATELY 30" BELOW GRADE FOR REROUTING OF NEW CIRCUIT FOR GATE POWER.

5. FURNISH AND INSTALL PRECAST CONCRETE HAND HOLE APPROXIMATELY 4'X4'X4' FOR TELECOM. SEE SHEE E-501 FOR DETAIL.

6. FURNISH AND INSTALL PRECAST CONCRETE HAND HOLE APPROXIMATELY 4'X4'X4' FOR LOW VOLTAGE POWER. SEE SHEET E-501 FOR DETAILS.

US Army Corps of Engineers®

MARK	DESCRIPTION	DATE

DESIGNED BY: MAJDI ARMAN
DRAWN BY: KPC
CHECKED BY: FL
SUBMITTED BY: FAYE LEFFLER
SIZE: ANSI D
FILE NAME: 114419_ES-101.dgn
ISSUE DATE: FEB 2019
SOLICITATION NO.:
CONTRACT NO.:
PROJECT ID: 114419

U.S. ARMY CORPS OF ENGINEERS
CHICAGO DISTRICT
231 S. LASALLE ST. SUITE 1500
CHICAGO, ILLINOIS 60604

CHICAGO LOCK
NORTH PIER REPAIRS
CHICAGO, ILLINOIS

ELECTRICAL SITE PLAN

SHEET ID

ES-101

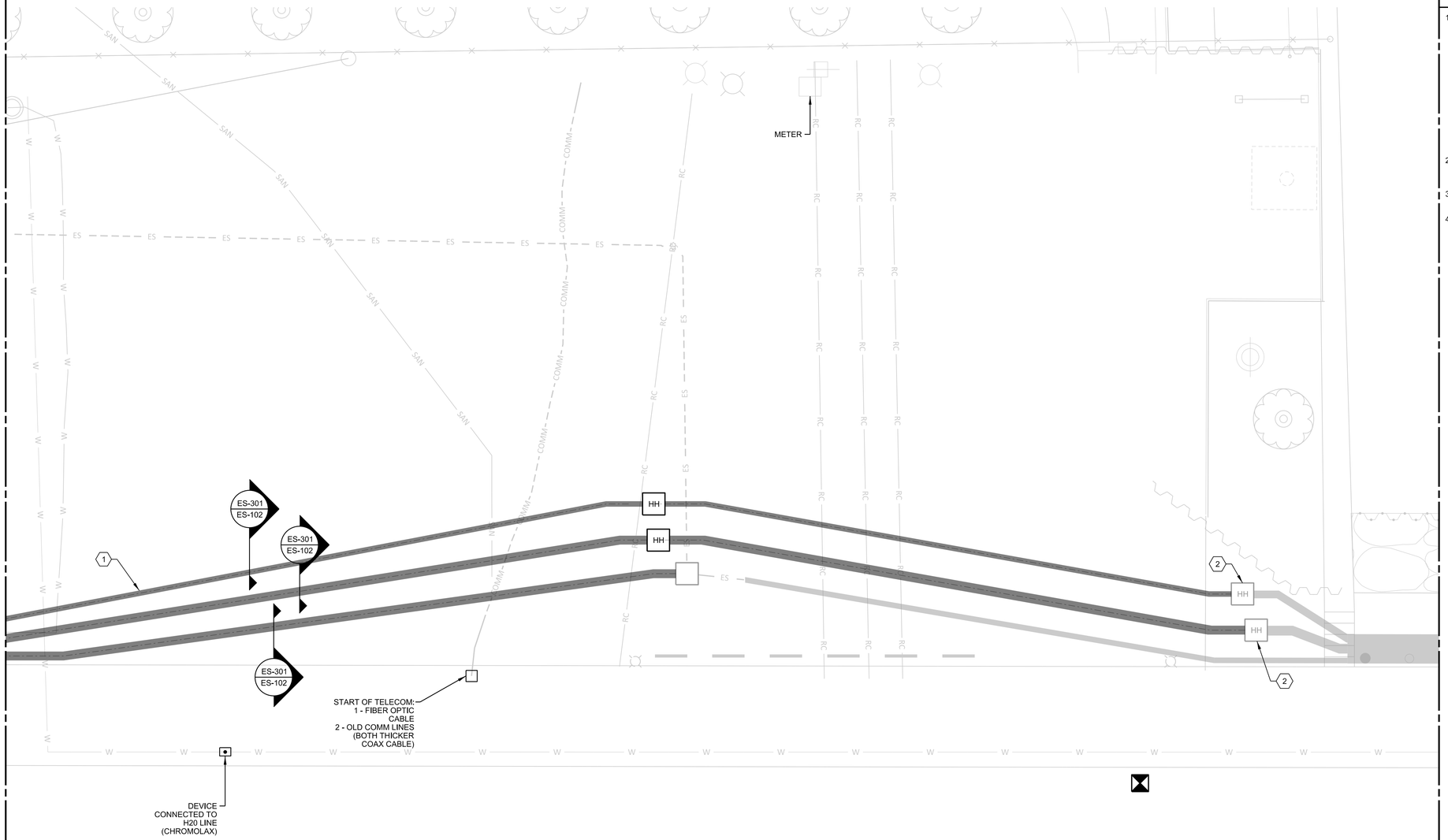

B1 ELECTRICAL SITE PLAN

SCALE: 3/32" = 1'

MATCHLINE TO ES-101

MATCHLINE TO ES-103

SHEET KEYNOTES

1. FURNISH AND INSTALL (8) 5" CONDUIT IN CONCRETE DUCT BANK. SEE SHEET E-XXX FOR CROSS SECTIONAL LAYOUT.

   (2) 5" CONDUIT FOR RE-ROUTING OF COMED 12.47KV PRIMARY DISTRIBUTION FEEDER.

   (4) 5" CONDUIT FOR RE-ROUTING OF 480/277V LIGHTING AND POWER CIRCUITS.

   (2) 5" CONDUIT FOR RE-ROUTING OF NEW TELECOM FIBER OPTIC CABLE (AT&T), ELECTRONIC SECURITY SYSTEM (VIDEO, ACCESS CONTROL) AND GATE CONTROL.

   DUCT BANK SHALL BE INSTALLED IN ACCORDANCE WITH COMED SYSTEM STANDARDS 'C4050 CONDUIT RUN TRENCH PREPARATION', 'C4171 CONDUIT RUN INSTALLATION' AND 'C4090 CONDUIT RUN FORMATIONS'.
2. RAISE, REWORK AND ADJUST EXISTING HAND HOLE TO ACCOMODATE FOR RISE IN GRADE ELEVATION. CORE DRILL DUCT-BANK CONDUIT INTO EXISTING HAND HOLE.
3. TERMINATE AND CAP (1) 5" CONDUIT 10' WEST OF EXISTNG COMED DUCT BANK FOR FUTURE WORK.
4. EXTEND (1) 5" CONDUIT AND CONNECT TO SPARE CONDUIT IN EXISTING COMED DUCT BANK. RUN NEW 12.47KV FEEDER THROUGH SPARE CONDUIT.

US Army Corps of Engineers®

MARK	DESCRIPTION	DATE

DESIGNED BY: MAJDI ARMAN
DRAWN BY: KPC
CHECKED BY: FL
SUBMITTED BY: FAYE LEFTLER
SIZE: ANSI D
FILE NAME: 114419_ES-102.dgn
ISSUE DATE: FEB 2019
SOLICITATION NO.:
CONTRACT NO.:
PROJECT ID: 114419

U.S. ARMY CORPS OF ENGINEERS
CHICAGO DISTRICT
231 S. LASALLE ST., SUITE 1500
CHICAGO, ILLINOIS 60604

CHICAGO LOCK
NORTH PIER REPAIRS
CHICAGO, ILLINOIS

ELECTRICAL SITE PLAN

SHEET ID

ES-102

...\Chicago Lock North Pier Repair - 114419\40 - Geospatial Data\Drawings\CAD_BIM_Sheets\ELECTRICAL SITE PLAN
2:45:13 PM 2/12/2019 PD: AEC_pdf.pltcfg DS: AEC_Screen.dscript

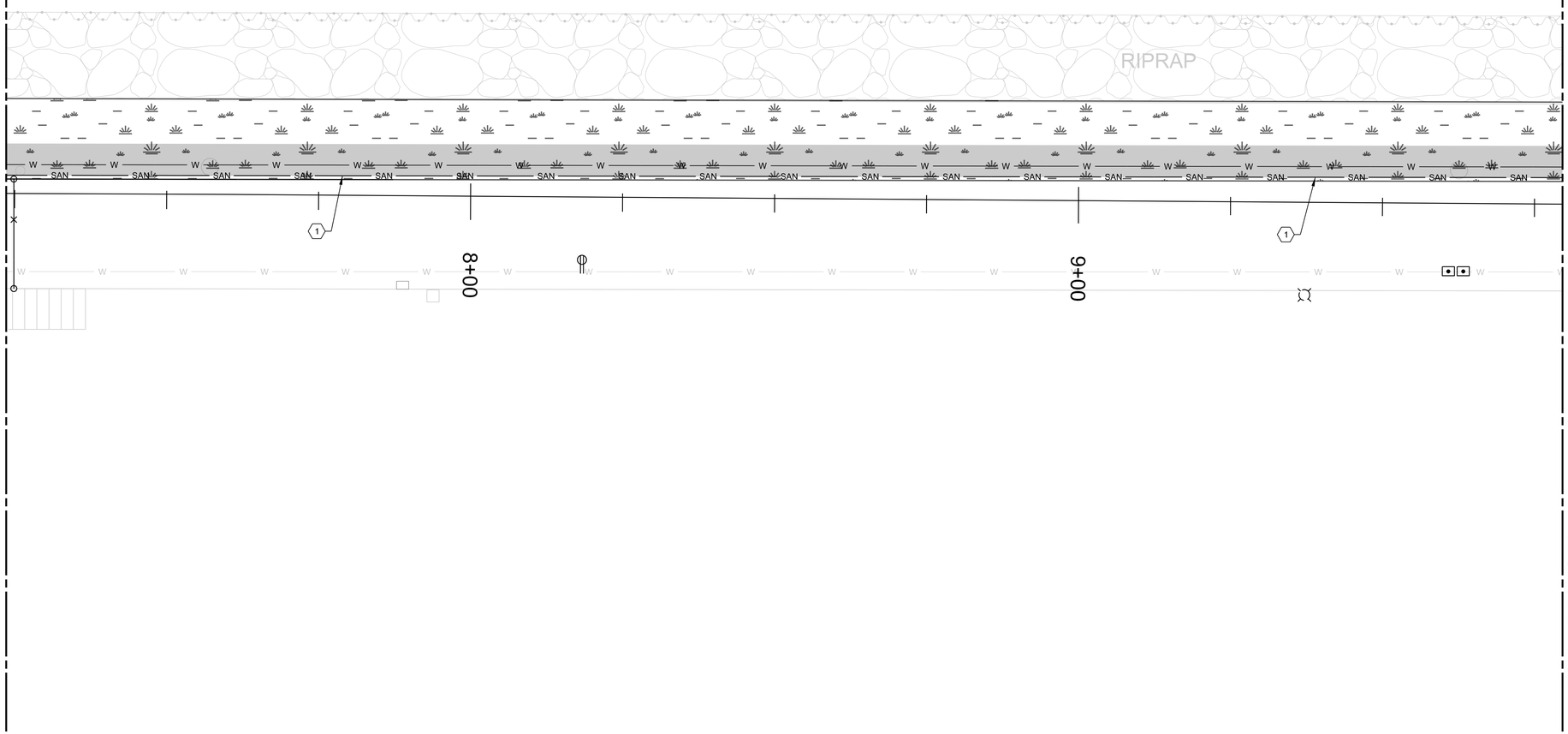

SHEET KEYNOTES

1. EXISTING DUCT-BANK TO REMAIN. ROUTE THE FOLLOWING NEW CABLES THROUGH EXISTING DUCT-BANK.
   - NEW FIBER OPTIC CABLE (AT&T). COORDINATE WITH TELECOM COMPANY EARLY ON AS TO MINIMIZE DOWNTIME.
   - NEW 12.47KV COMED PRIMARY FEEDER. COORDINATE WITH COMED EARLY ON AS TO MINIMIZE DOWNTIME.
   - NEW GATE POWER CABLE. TRACK EXISTING CABLE BACK TO SOURCE AND ROUTE NEW.
   - NEW GATE CONTROLS CABLE. TRACK EXISTING CABLE BACK TO SOURCE AND ROUTE NEW.

A1 ELECTRICAL SITE PLAN
SCALE: 3/32"=1'-0"

0 8' 16' 32'

US Army Corps of Engineers®

MARK	DESCRIPTION	DATE

DESIGNED BY: MAJDI ARMAN
DRAWN BY: KPC
CHECKED BY: FL
SUBMITTED BY: FAYE LEFFLER
DATE: FILE NAME: 114419_ES-103.dgn
ISSUE DATE: FEB 2019
SOLICITATION NO.:
CONTRACT NO.:
PROJECT ID: 114419

U.S. ARMY CORPS OF ENGINEERS
CHICAGO DISTRICT
231 S. LASALLE ST., SUITE 1500
CHICAGO, ILLINOIS 60604

CHICAGO LOCK
NORTH PIER REPAIRS
CHICAGO, ILLINOIS

ELECTRICAL SITE PLAN

SHEET ID
ES-103

...\Chicago Lock North Pier Repair - 114419\40 - Geospatial Data\Drawings\CAD_BIM_Sheets\ELECTRICAL SITE PLAN
2:45:16 PM 2/12/2019 PD: AEC_pdf.pltcfg DS: AEC_Screen.dscript

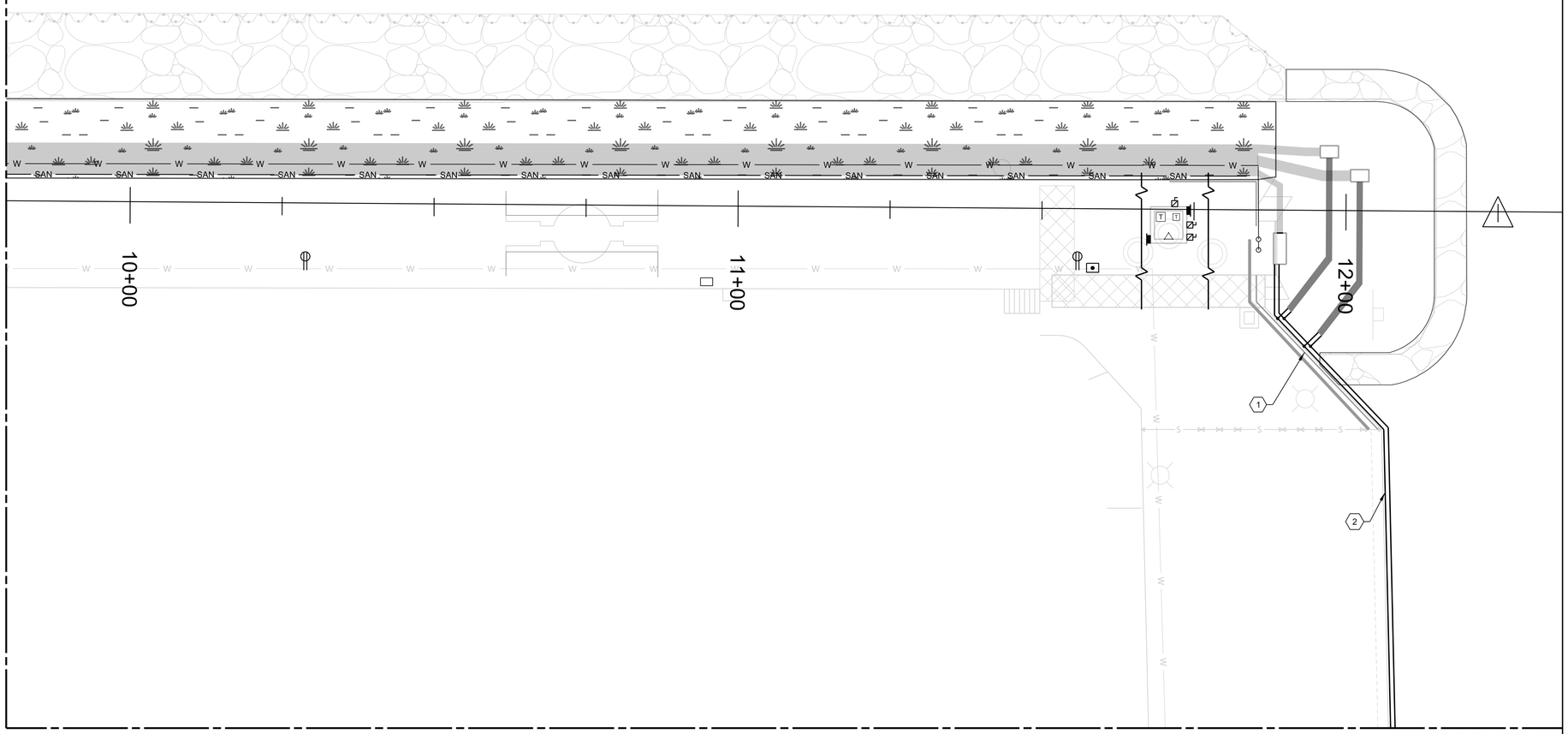

SHEET KEYNOTES

1. CAP (2) CONDUIT AT GRADE HERE FOR FUTURE GENERATOR WORK. CONTINUE ROUTING REMAINING CONDUIT.
2. FURNISH AND INSTALL (6) 5" CONDUIT AND MOUNT TO PIER SIDE WALL. SEE SHEET E-XXX FOR CROSS SECTION LAYOUT.

- (2) 5" CONDUIT FOR RE-ROUTING OF COMED 12.47KV PRIMARY DISTRIBUTION FEEDER.
- (2) 5" CONDUIT FOR RE-ROUTING OF LOW VOLTAGE POWER CIRCUITS.
- (2) 5" CONDUIT FOR RE-ROUTING OF NEW TELECOM FIBER OPTIC CABLE (AT&T), ELECTRONIC SECURITY SYSTEM (VIDEO, ACCESS CONTROL) AND GATE CONTROL.

X# DRAWING AREA TITLE

SCALE:

0 8' 16' 32'

US Army Corps of Engineers®

MARK	DESCRIPTION	DATE

U.S. ARMY CORPS OF ENGINEERS
CHICAGO DISTRICT
231 S. LASALLE ST., SUITE 1500
CHICAGO, ILLINOIS 60604

DESIGNED BY: MAJID ARMAN
DRAWN BY: KPC
CHECKED BY: CG
SUBMITTED BY: CHRIS GIACALONE PE
SIZE: ANSI D
FILE NAME: 114419 ES-104.dgn
ISSUE DATE: FEB 2019
SOLICITATION NO.:
CONTRACT NO.:
PROJECT ID: 114419

CHICAGO LOCK
NORTH PIER REPAIRS
CHICAGO, ILLINOIS

SITE PLAN 4

SHEET ID

ES-104

...\Chicago Lock North Pier Repair - 114419\40 - Geospatial Data\Drawings\CAD_BIM_Sheets\ELECTRICAL SITE PLAN
2:45:18 PM 2/12/2019 PD: AEC_pdf.pltcfg DS: AEC_Screen.dscript

MATCHLINE TO ES-104

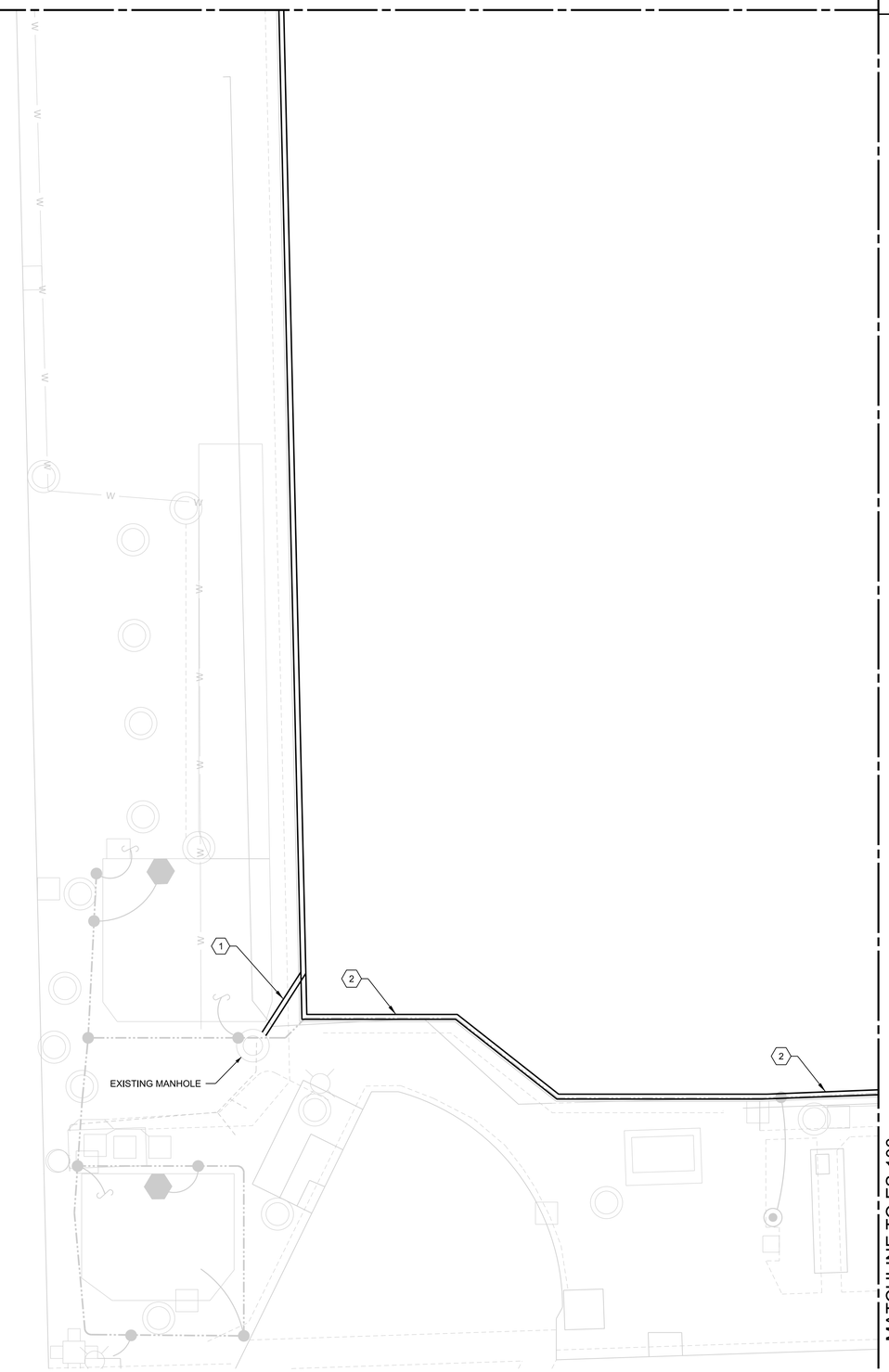

MATCHLINE TO ES-106

SHEET KEYNOTES

1. ROUTE TO EXISTING MANHOLE FOR LOW VOLTAGE POWER CIRCUIT WIRING.
2. FURNISH AND INSTALL (4) 5" CONDUIT AND MOUNT TO PIER SIDE WALL. SEE SHEET E-XXX FOR CROSS SECTION LAYOUT.

- (2) 5" CONDUIT FOR RE-ROUTING OF COMED 12.47KV PRIMARY DISTRIBUTION FEEDER.
- (2) 5" CONDUIT FOR RE-ROUTING OF NEW TELECOM FIBER OPTIC CABLE (AT&T), ELECTRONIC SECURITY SYSTEM (VIDEO, ACCESS CONTROL) AND GATE CONTROL.

X# DRAWING AREA TITLE
SCALE:

0 8' 16' 32'

US Army Corps of Engineers®

MARK	DESCRIPTION	DATE

DESIGNED BY: MAJDI ARMAN
DRAWN BY: KPC
CHECKED BY: CG
SUBMITTED BY: CHRIS GIACONE, PE
SIZE: ANSI D
FILE NAME: 114419_ES-105.dgn
ISSUE DATE: FEB 2019
SOLICITATION NO.:
CONTRACT NO.:
PROJECT ID: 114419

U.S. ARMY CORPS OF ENGINEERS
CHICAGO DISTRICT
231 S. LASALLE ST. SUITE 1500
CHICAGO, ILLINOIS 60604

CHICAGO LOCK
NORTH PIER REPAIRS
CHICAGO, ILLINOIS

SITE PLAN 5

SHEET ID
ES-105

...\Chicago Lock North Pier Repair - 114419\40 - Geospatial Data\Drawings\CAD_BIM_Sheets\ELECTRICAL SITE PLAN
2:45:21 PM 2/12/2019 PD: AEC_pdf.pltcfg DS: AEC_Screen.dscript

SHEET KEYNOTES

1. FURNISH AND INSTALL (4) 5" CONDUIT AND MOUNT TO PIER SIDE WALL. SEE SHEET E-XXX FOR CROSS SECTION LAYOUT.
   - (2) 5" CONDUIT FOR RE-ROUTING OF COMED 12.47KV PRIMARY DISTRIBUTION FEEDER.
   - (2) 5" CONDUIT FOR RE-ROUTING OF NEW TELECOM FIBER OPTIC CABLE (AT&T), ELECTRONIC SECURITY SYSTEM (VIDEO, ACCESS CONTROL) AND GATE CONTROL.
2. FURNISH AND INSTALL (2) 5" CONDUIT AND MOUNT TO PIER SIDE WALL. SEE SHEET E-XXX FOR CROSS SECTION LAYOUT.
   - (2) 5" CONDUIT FOR RE-ROUTING OF NEW TELECOM FIBER OPTIC CABLE (AT&T), ELECTRONIC SECURITY SYSTEM (VIDEO, ACCESS CONTROL) AND GATE CONTROL.

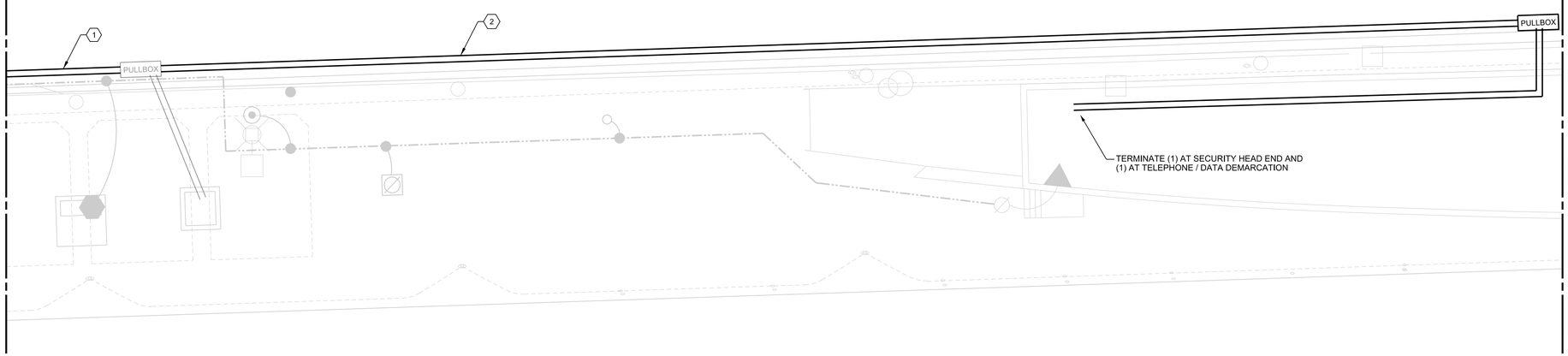

X# DRAWING AREA TITLE
SCALE:

0 8' 16' 32'

US Army Corps of Engineers®

MARK	DESCRIPTION	DATE

DESIGNED BY: MAJDI ARMAN	ISSUE DATE: FEB 2019
DRAWN BY: KPC	SOLICITATION NO.:
CHECKED BY: CG	CONTRACT NO.:
SUBMITTED BY: CHRIS GIACONE, PE	PROJECT ID: 114419
SIZE: ANSI D	FILE NAME: 114419_ES-106.dgn

U.S. ARMY CORPS OF ENGINEERS
CHICAGO DISTRICT
231 S. LASALLE ST., SUITE 1500
CHICAGO, ILLINOIS 60604

CHICAGO LOCK
NORTH PIER REPAIRS
CHICAGO, ILLINOIS

SITE PLAN 6

SHEET ID
ES-106

...\Chicago Lock North Pier Repair - 114419\40 - Geospatial Data\Drawings\CAD_BIM_Sheets\ELECTRICAL SITE PLAN
2:45:23 PM 2/12/2019 PD: AEC_pdf.pltcfg DS: AEC_Screen.dscript

DUCT-BANK DESCRIPTION	APPROX. STATIONING RANGE		LENGTH (IN FT.)
LOW VOLTAGE	6+92.90	7+7.22	14.97
LOW VOLTAGE	11+85.49	12+0.72	15.5
TELECOM	6+90.44	7+7.22	19.06
TELECOM	11+85.49	11+95.69	10.21
MEDIUM VOLTAGE	6+2.59	7+7.22	104.65
MEDIUM VOLTAGE	11+85.49	11+89.13	11.95
COMBINED DUCT-BANK			
LOW VOLTAGE	7+7.22	11+85.49	478.3
TELECOM	7+7.22	11+85.49	478.3
MEDIUM VOLTAGE	7+7.22	11+85.49	478.3

NOTES:

1. SEE WHOLE BUILDING DESIGN GUIDE FOR MANHOLE AND HAND HOLE DETAILS AT: HTTP://WWW.WBDG.ORG/CCB/NAVGRAPH/GRAPHTOC.PDF.
2. CONDUIT LENGTHS PROVIDED BASED ON LOCATIONS OF THE TIE-IN POINTS SHOWN IN THE DRAWINGS. CONTRACTOR MAY NEED TO ADJUST TIE IN POINTS IN THE FIELD.

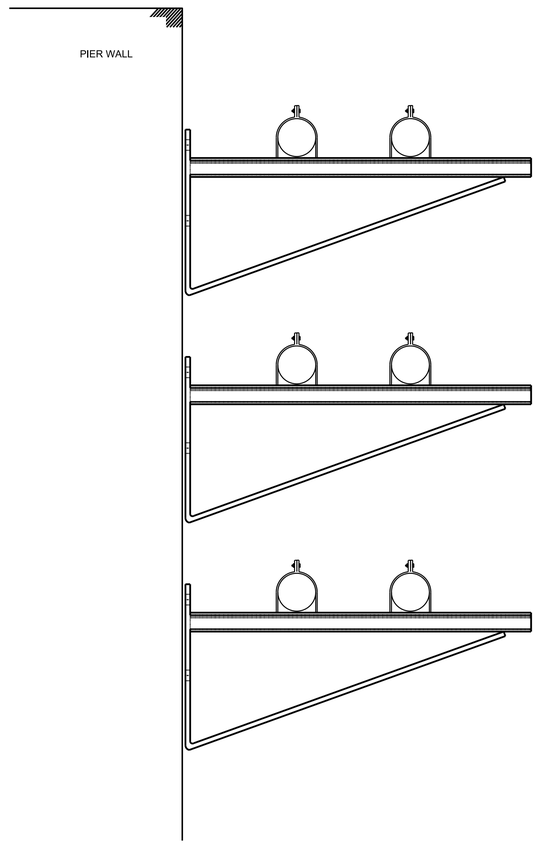

B2 PIER WALL SECTION
SCALE: 3" = 1'

NOTES:

1. INCLUDE IN BID APPROXIMATELY (250) B494-18 BRACKETS AND BOLTS, NUTS, AND OTHER MOUNTING HARDWARE.
2. BRACKETS AND ALL BOLTS, NUTS, AND OTHER MOUNTING HARDWARE SHALL BE HOT TIPPED GALVANIZED.

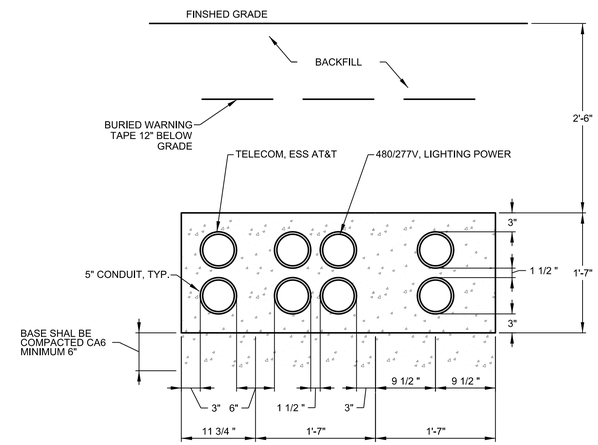

NOTES:

1. INSTALL CAST IN PLACE CONCRETE DUCT-BANK IN ACCORDANCE WITH COMED SYSTEM STANDARDS C4050 CONDUIT TRENCH PREPARATION, C4171 CONDUIT RUN INSTALLATION AND C4090 CONDUIT RUN FORMATION.
2. TRENCH SHALL BE BACK FILLED. SAND OR OTHER APPROVED MATERIAL SHALL BE USED UNDER PAVEMENTS. SEE COMED SYSTEM STANDARD C4171 CONDUIT RUN INSTALLATION SECTION 10.

1 E-101 D6 COMBINED DUCT-BANK (TELECOM, LOW VOLTAGE POWER AND MEDIUM VOLTAGE POWER)
SCALE: 1" = 1'

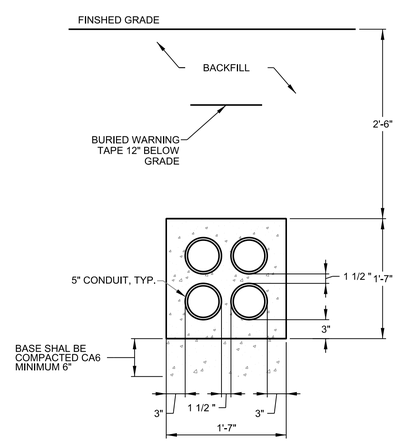

2 E-502 A5 LOW VOLTAGE POWER DUCT-BANK
SCALE: 1" = 1'

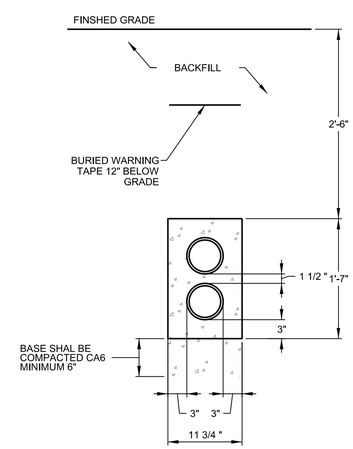

3 E-502 A8 TELECOM DUCT-BANK
SCALE: 1" = 1'

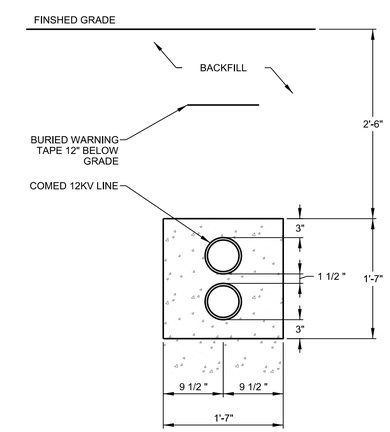

4 E-502 A9 MEDIUM VOLTAGE DUCT-BANK
SCALE: 1" = 1'

US Army Corps of Engineers®

MARK	DESCRIPTION	DATE

DESIGNED BY: MAJIDI ARMAN
DRAWN BY: MAN
CHECKED BY:
SUBMITTED BY: FAYE LEFFLER
SIZE: ANSI X
FILE FORMAT: FILE NAME: 114419_ES-301.dgn
ISSUE DATE: 29 SEPT 2016
SOLICITATION NO.: W912P6-16-B-0014
CONTRACT NO.: W912P6-16-C-0016
PROJECT CODE: 114419

U.S. ARMY CORPS OF ENGINEERS
CHICAGO DISTRICT
231 SOUTH LASALLE STREET, SUITE 1500
CHICAGO, IL 60604

CHICAGO LOCK
NORTH PIER REPAIRS
CHICAGO, ILLINOIS

DUCT-BANK DETAILS

SHEET ID
ES-301

FINAL

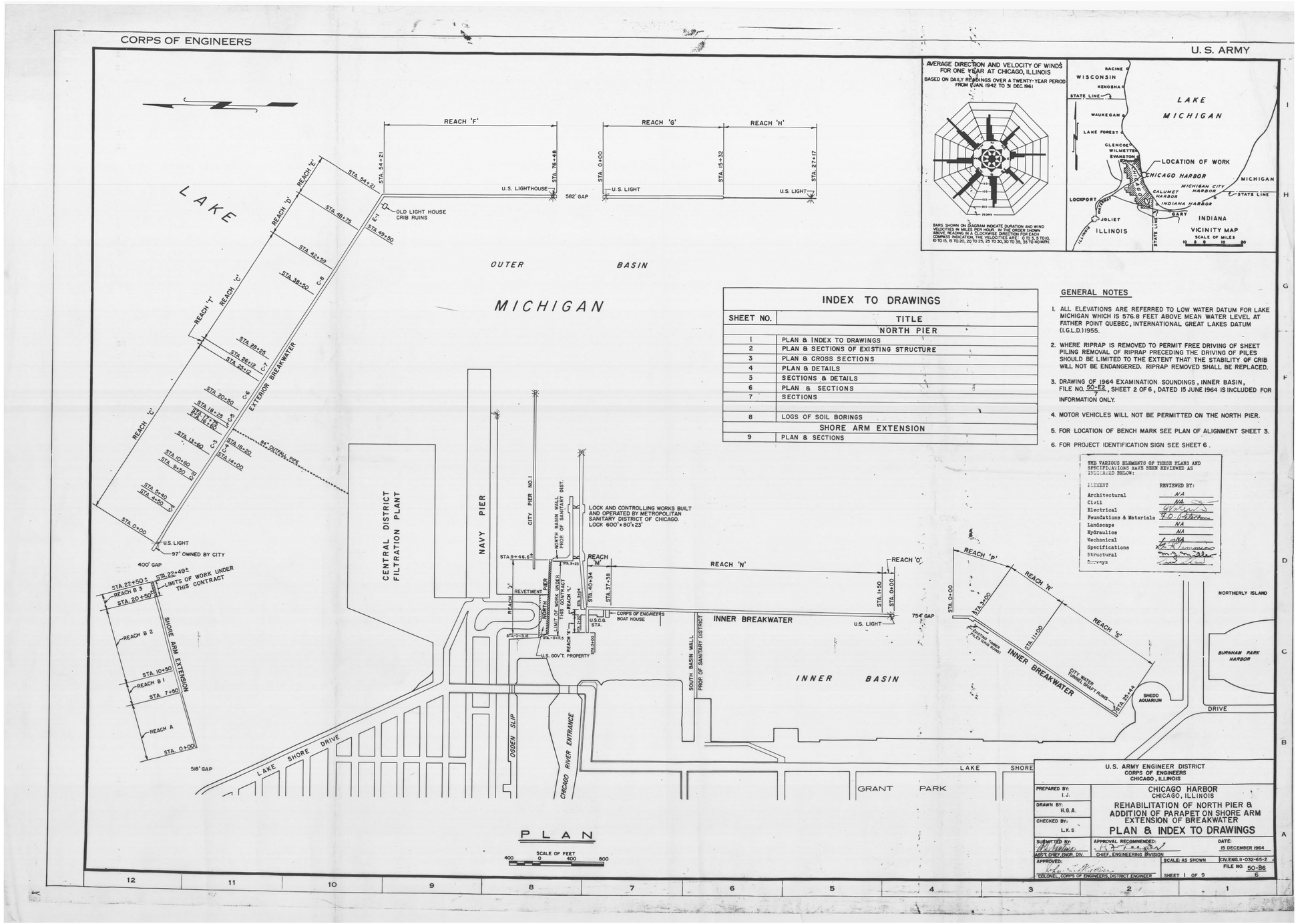

INDEX TO DRAWINGS

SHEET NO.	TITLE
	NORTH PIER
1	PLAN & INDEX TO DRAWINGS
2	PLAN & SECTIONS OF EXISTING STRUCTURE
3	PLAN & CROSS SECTIONS
4	PLAN & DETAILS
5	SECTIONS & DETAILS
6	PLAN & SECTIONS
7	SECTIONS
8	LOGS OF SOIL BORINGS
	SHORE ARM EXTENSION
9	PLAN & SECTIONS

GENERAL NOTES

1. ALL ELEVATIONS ARE REFERRED TO LOW WATER DATUM FOR LAKE MICHIGAN WHICH IS 576.8 FEET ABOVE MEAN WATER LEVEL AT FATHER POINT QUEBEC, INTERNATIONAL GREAT LAKES DATUM (I.G.L.D.) 1955.
2. WHERE RIPRAP IS REMOVED TO PERMIT FREE DRIVING OF SHEET PILING REMOVAL OF RIPRAP PRECEDING THE DRIVING OF PILES SHOULD BE LIMITED TO THE EXTENT THAT THE STABILITY OF CRIB WILL NOT BE ENDANGERED. RIPRAP REMOVED SHALL BE REPLACED.
3. DRAWING OF 1964 EXAMINATION SOUNDINGS, INNER BASIN, FILE NO. 50-E2, SHEET 2 OF 6, DATED 15 JUNE 1964 IS INCLUDED FOR INFORMATION ONLY.
4. MOTOR VEHICLES WILL NOT BE PERMITTED ON THE NORTH PIER.
5. FOR LOCATION OF BENCH MARK SEE PLAN OF ALIGNMENT SHEET 3.
6. FOR PROJECT IDENTIFICATION SIGN SEE SHEET 6.

THE VARIOUS ELEMENTS OF THESE PLANS AND SPECIFICATIONS HAVE BEEN REVIEWED AS INDICATED BELOW:

ELEMENT	REVIEWED BY:
Architectural	NA
Civil	NA
Electrical	
Foundations & Materials	
Landscape	NA
Hydraulics	NA
Mechanical	NA
Specifications	
Structural	
Surveys	

U.S. ARMY ENGINEER DISTRICT
CORPS OF ENGINEERS
CHICAGO, ILLINOIS

PREPARED BY: I. J.
DRAWN BY: H. G. A.
CHECKED BY: L. K. S
SUBMITTED BY: ASS'T. CHIEF, ENGR. DIV.
APPROVAL RECOMMENDED: CHIEF, ENGINEERING DIVISION
DATE: 15 DECEMBER 1964
APPROVED: COLONEL, CORPS OF ENGINEERS, DISTRICT ENGINEER

CHICAGO HARBOR
CHICAGO, ILLINOIS

REHABILITATION OF NORTH PIER & ADDITION OF PARAPET ON SHORE ARM EXTENSION OF BREAKWATER

PLAN & INDEX TO DRAWINGS

SCALE: AS SHOWN
CIV. ENG. 0-032-65-2
FILE NO. 50-86 6
SHEET 1 OF 9

REFERENCE DRAWING

US Army Corps of Engineers®

MARK	DESCRIPTION	DATE

DESIGNED BY:
DRAWN BY: KPC
CHECKED BY: MK
SUBMITTED BY: MICHAEL KRULE, PE
SIZE: E1 FILE NAME: 114419_R-001.dgn
ANSI D
ISSUE DATE: FEB 2019
SOLICITATION NO.:
CONTRACT NO.:
PROJECT ID: 114419

U.S. ARMY CORPS OF ENGINEERS
CHICAGO DISTRICT
231 S. LASALLE ST., SUITE 1500
CHICAGO, ILLINOIS 60604

CHICAGO LOCK
NORTH PIER REPAIRS
CHICAGO, ILLINOIS

REFERENCE DRAWING 1

SHEET ID
R-001

...\Chicago Lock North Pier Repair - 114419\40 - Geospatial Data\Drawings\CAD_BIM_Sheets\Sheet File - Resource - Resource - General - R-00
12:58:57 PM 2/12/2019 PD: AEC_pdf.pltcfg DS: AEC_Screen.dscript

CORPS OF ENGINEERS

U. S. ARMY

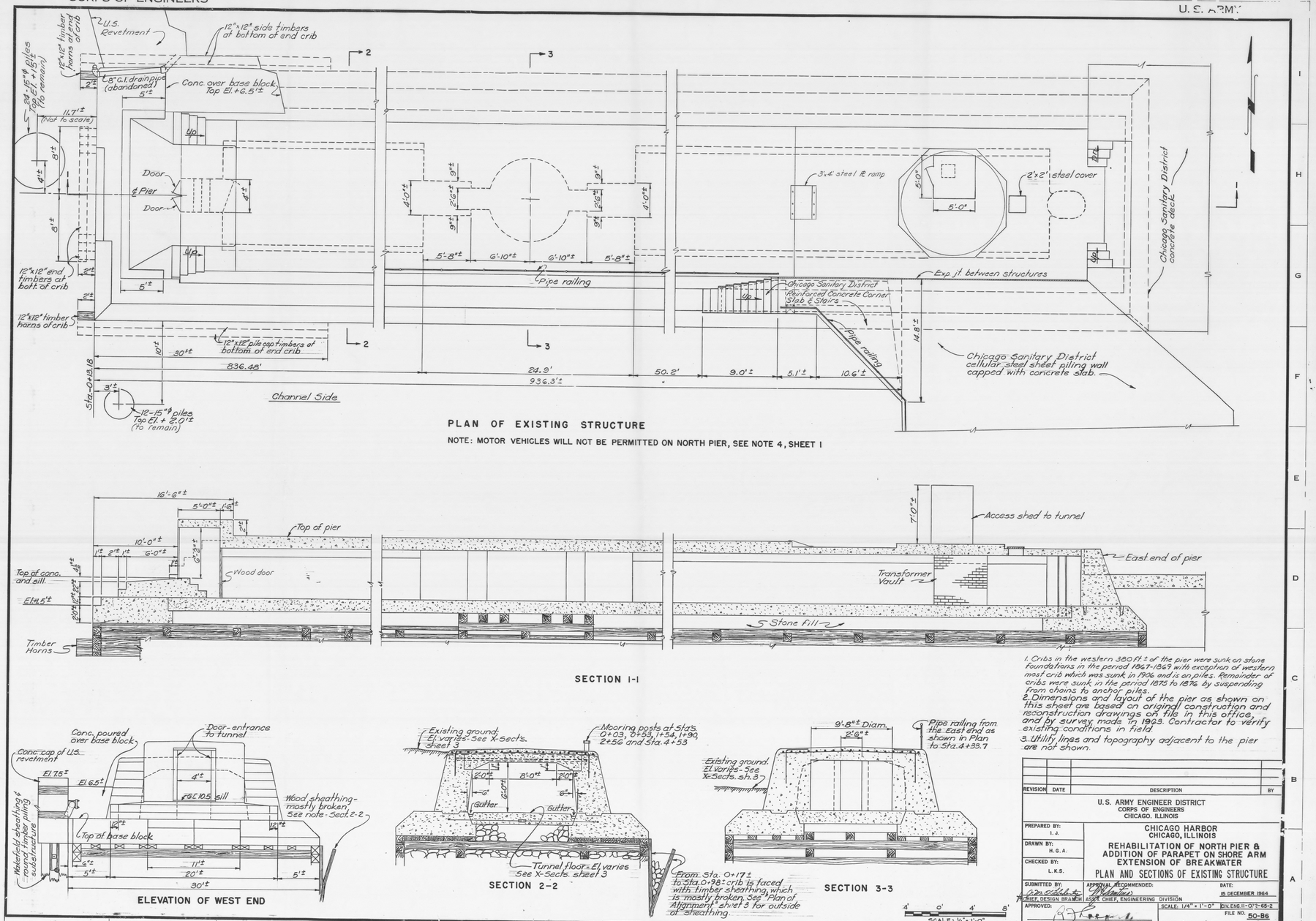

PLAN OF EXISTING STRUCTURE

NOTE: MOTOR VEHICLES WILL NOT BE PERMITTED ON NORTH PIER, SEE NOTE 4, SHEET 1

SECTION 1-1

1. Cribs in the western 320 ft ± of the pier were sunk on stone foundations in the period 1867-1869 with exception of western most crib which was sunk in 1906 and is on piles. Remainder of cribs were sunk in the period 1875 to 1876 by suspending from chains to anchor piles.
2. Dimensions and layout of the pier as shown on this sheet are based on original construction and reconstruction drawings on file in this office, and by survey made in 1963. Contractor to verify existing conditions in field.
3. Utility lines and topography adjacent to the pier are not shown.

ELEVATION OF WEST END

SECTION 2-2

From Sta. 0+17± to Sta. 0+98± crib is faced with timber sheathing, which is mostly broken. See "Plan of Alignment" sheet 3 for outside of sheathing.

SECTION 3-3

SCALE: ½" = 1'-0"

REVISION	DATE	DESCRIPTION	BY

U.S. ARMY ENGINEER DISTRICT
CORPS OF ENGINEERS
CHICAGO, ILLINOIS

CHICAGO HARBOR
CHICAGO, ILLINOIS

REHABILITATION OF NORTH PIER & ADDITION OF PARAPET ON SHORE ARM EXTENSION OF BREAKWATER

PLAN AND SECTIONS OF EXISTING STRUCTURE

PREPARED BY: I. J.
DRAWN BY: H. G. A.
CHECKED BY: L. K. S.
SUBMITTED BY: CHIEF, DESIGN BRANCH
APPROVAL RECOMMENDED: ASST. CHIEF, ENGINEERING DIVISION
APPROVED: CHIEF, ENGINEERING DIVISION
DATE: 15 DECEMBER 1964
SCALE: 1/4" = 1'-0"
DIV. ENG. 11-0°2-65-2
FILE NO. 50-86
SHEET 2 OF 9
6

REFERENCE DRAWING

US Army Corps of Engineers®

MARK	DESCRIPTION	DATE

ISSUE DATE: FEB 2019
SOLICITATION NO.:
CONTRACT NO.:
PROJECT ID: 114419

DESIGNED BY: KPC
DRAWN BY: KPC
CHECKED BY: MK
SUBMITTED BY: MICHAEL KINLEY, PE
SIZE: ANSI D FILE NAME: 114419 R-002.dgn

U.S. ARMY CORPS OF ENGINEERS
CHICAGO DISTRICT
231 S. LASALLE ST., SUITE 1500
CHICAGO, ILLINOIS 60604

CHICAGO LOCK
NORTH PIER REPAIRS
CHICAGO, ILLINOIS

REFERENCE DRAWING 2

SHEET ID

R-002

...\Chicago Lock North Pier Repair - 114419\40 - Geospatial Data\Drawings\CAD_BIM_Sheets\Sheet File - Resource - Resource - General - R-00
1:01:02 PM 2/12/2019 PD: AEC_pdf.pltcfg DS: AEC_Screen.dscript

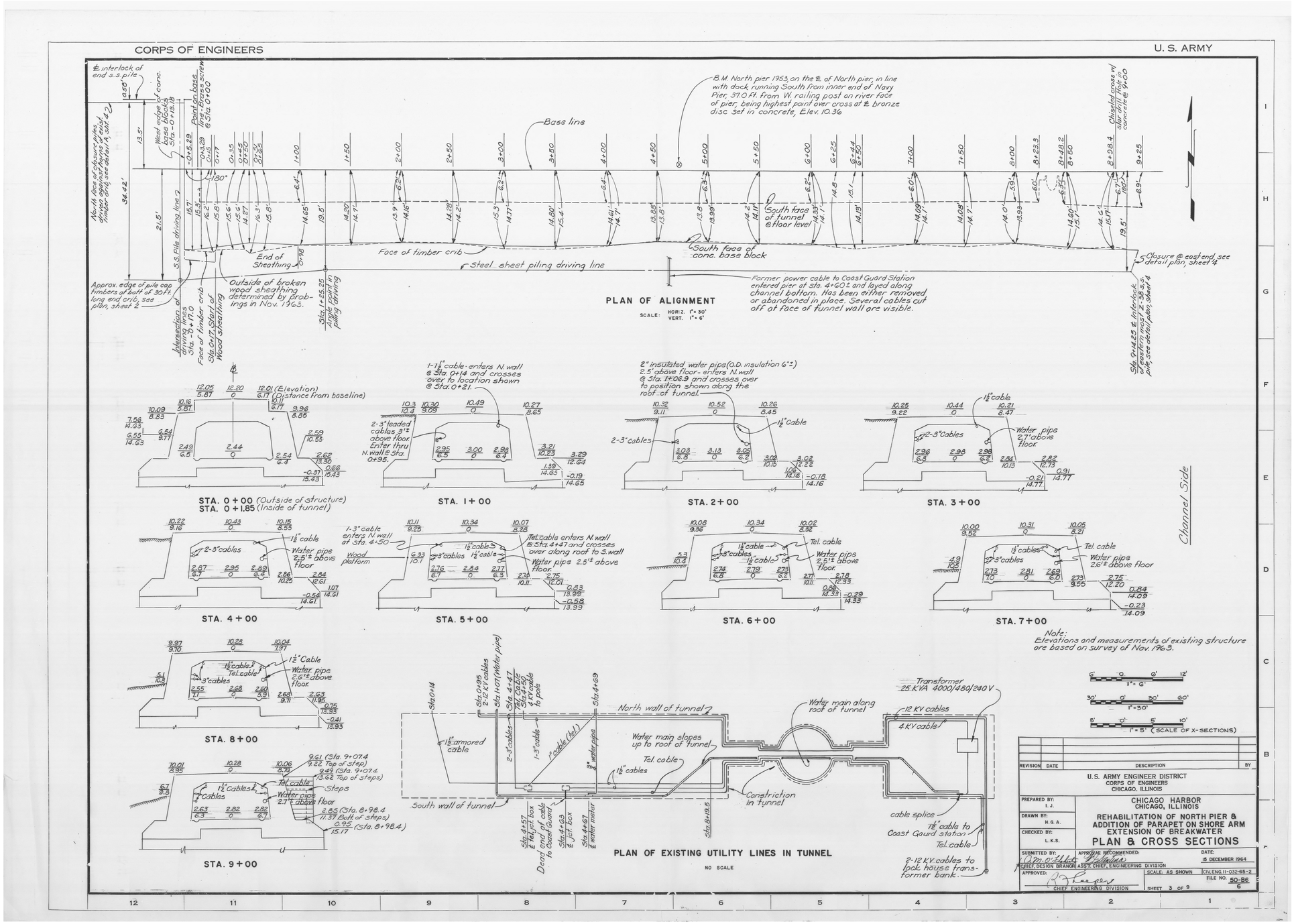

REFERENCE DRAWING

US Army Corps of Engineers®

MARK	DESCRIPTION	DATE

DESIGNED BY:	ISSUE DATE: FEB 2019
DRAWN BY: KPC	SOLICITATION NO.:
CHECKED BY: MK	CONTRACT NO.:
SUBMITTED BY: MICHAEL KRUEGER, PE	PROJECT ID: 114419
SIZE: ANSI D	FILE NAME: 114419_R-003.dgn

U.S. ARMY CORPS OF ENGINEERS
CHICAGO DISTRICT
231 S. LASALLE ST. SUITE 1500
CHICAGO, ILLINOIS 60604

CHICAGO LOCK
NORTH PIER REPAIRS
CHICAGO, ILLINOIS

REFERENCE DRAWING 3

SHEET ID

R-003

...\Chicago Lock North Pier Repair - 114419\40 - Geospatial Data\Drawings\CAD_BIM_Sheets\Sheet File - Resource - Resource - General - R-00
1:03:11 PM 2/12/2019 PD: AEC_pdf.pltcfg DS: AEC_Screen.dscript

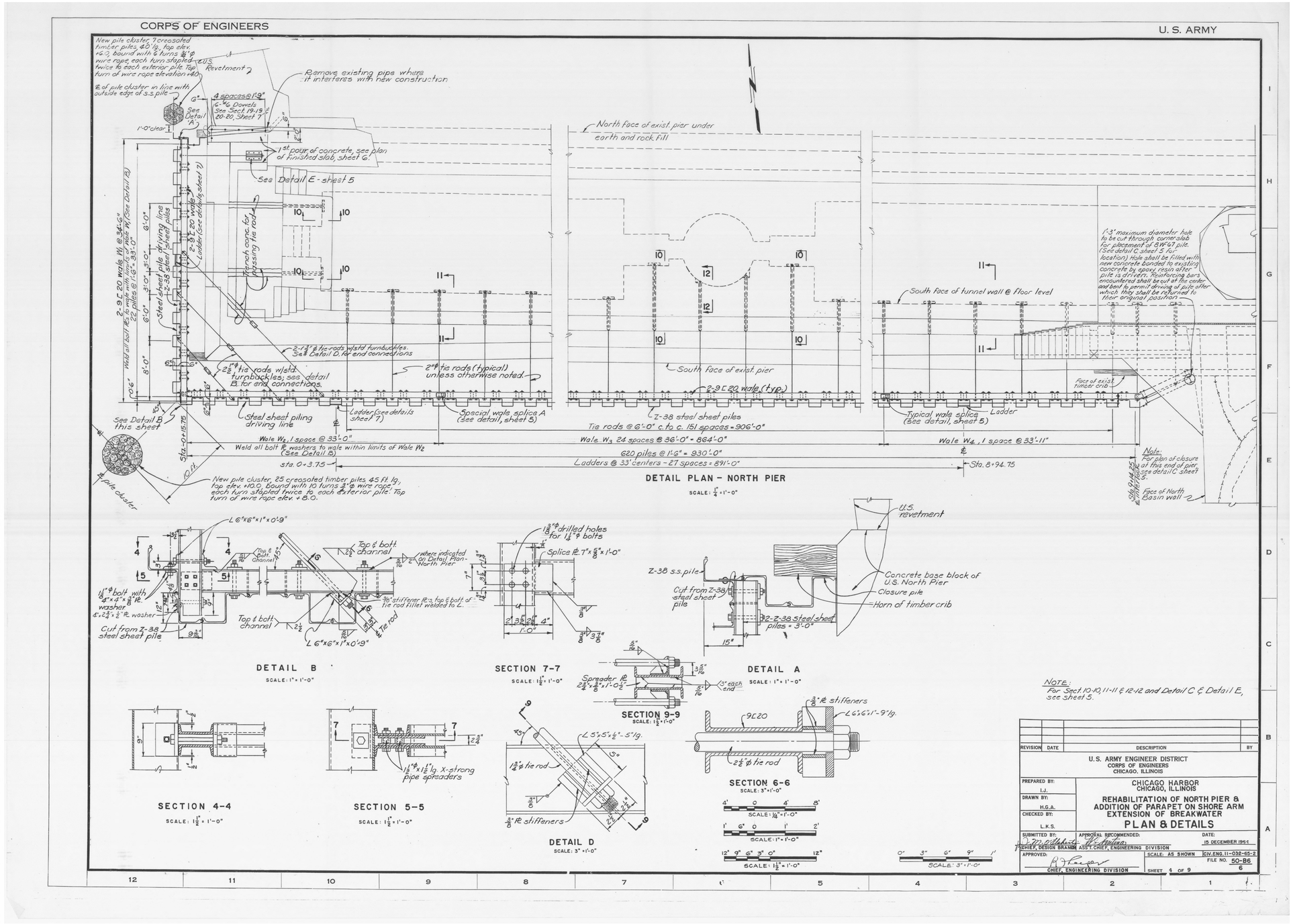

REFERENCE DRAWING

US Army Corps of Engineers®

MARK	DESCRIPTION	DATE

ISSUE DATE: FEB 2019
SOLICITATION NO.:
CONTRACT NO.:
PROJECT ID: 114419
DESIGNED BY: KPC
DRAWN BY: KPC
CHECKED BY: MK
SUBMITTED BY: MICHAEL KRUEGER, PE
SIZE: ANSI D
FILE NAME: 114419_R-004.dgn

U.S. ARMY CORPS OF ENGINEERS
CHICAGO DISTRICT
231 S. LASALLE ST., SUITE 1500
CHICAGO, ILLINOIS 60604

CHICAGO LOCK
NORTH PIER REPAIRS
CHICAGO, ILLINOIS

REFERENCE DRAWING 4

SHEET ID
R-004

...\Chicago Lock North Pier Repair - 114419\40 - Geospatial Data\Drawings\CAD_BIM_Sheets\Sheet File - Resource - Resource - General - R-00
1:05:17 PM 2/12/2019 PD: AEC_pdf.pltcfg DS: AEC_Screen.dscript